Fort Bend County, Texas
Request for Proposals

Construction of Information Technology Building
for Fort Bend County
RFP 24-064

SUBMIT PROPOSALS TO:

Fort Bend County
Purchasing Department
Travis Annex
301 Jackson, Suite 201
Richmond, TX 77469

****NOTE:**
All correspondence must include the term "Purchasing Department" in address to assist in proper delivery

SUBMIT NO LATER THAN:

Tuesday, June 25, 2024
2:00 PM (Central)

MARK ENVELOPE:

RFP 24-064
Information Technology Building

ALL SUBMITTALS MUST BE RECEIVED AND TIME/DATE STAMPED BY THE PURCHASING OFFICE OF FORT BEND COUNTY ON OR BEFORE THE SPECIFIED TIME/DATE STATED ABOVE.

SUBMITTALS RECEIVED AS REQUIRED WILL THEN BE OPENED AND THE NAMES PUBLICLY READ.

SUBMITTALS RECEIVED AFTER THE SPECIFIED TIME WILL BE RETURNED UNOPENED.

Results will not be given by phone.
Results will be provided to bidder in writing after Commissioners Court award.

Requests for information must be in writing and directed to:
Brooke Lindemann
Senior Buyer
Brooke.Lindemann@fortbendcountytx.gov

Vendor Responsibilities:

- Download and complete any addendums. (Addendums will be posted on the Fort Bend County website no Later than 48 hours prior to bid opening)
- Submit response in accordance with requirements stated on the cover of this document.
- DO NOT submit responses via email or fax.

Prepared: 5/9/2024
Issued: 5/26/2024

1.0 SCOPE OF WORK:

Fort Bend County, Texas (hereafter referred to as the “County”) seeks Proposals (“Proposals or RFP”) for selection of a Contractor (“Respondent”) to complete the construction of a new Information Technology Building (“Project”), located in Richmond, Texas.

Vendor to construct new three story structure totaling 42,173 square feet with a building height of 48 feet designed to withstand heavy storms. The facility will include a large multi-purpose meeting space, Data Center, conference rooms, staff offices, and open work areas for the I.T. team. The site area is 3.1 acres and will include concrete paving for one hundred seventy-nine (179) vehicle spaces and a loop for loading dock drop-offs.

2.0 GUIDELINES:

By virtue of submitting a proposal, interested parties are acknowledging:

2.1 The County reserves the right to reject any or all proposals if it determines that select proposals are not responsive to the RFP. The County reserves the right to reconsider any proposal submitted at any phase of the procurement. It also reserves the right to meet with select Respondents at any time to gather additional information. Furthermore, the County reserves the right to delete or add scope up until the final contract signing.

2.2 All Respondents submitting proposals agree that their pricing is valid for a minimum of ninety (90) days after proposal submission to the County. Furthermore, the County is by statute exempt from the State Sales Tax and Federal Excise Tax; therefore, proposal prices shall not include taxes.

2.3 This Proposal does not commit the County to award nor does it constitute an offer of employment or a contract for services. Costs incurred in the submission of this proposal, or in making necessary studies or designs for the preparation thereof, are the sole responsibility of the Respondents. Further, no reimbursable cost may be incurred in the anticipation of award. Proposals containing elaborate artwork, expensive paper and binding and expensive visual or other presentations are neither necessary nor desired.

2.4 In an effort to maintain fairness in the process, all inquiries concerning this procurement are to be directed only to the County’s Purchasing Agent in writing. Attempts to contact any members of the County’s Commissioners’ Court or any other County employee to influence the procurement decision may lead to immediate elimination from further consideration.

2.5 When responding to this Proposal, follow all instructions carefully. Submit proposal contents according to the outline specified and submit all hard copy and electronic documents according to the instructions. Failure to follow these instructions may be considered a non-responsive proposal and may result in immediate elimination from further consideration.

3.0 PROPOSAL CONTACT:

This Proposal is being issued by the County Purchasing Agent on behalf of Fort Bend County, Texas. Thus, responses should be directed to the Purchasing Agent, as outlined below. **Respondents are specifically directed NOT to contact any County personnel for meetings, conferences or technical discussions that are related to this Proposal other than specified herein. Unauthorized contact of any County personnel will likely be cause for rejection of the Respondent's proposal. All communications regarding the Proposal shall be directed to the County's Proposal Contact.** Communication with the Proposal Contact is permitted via email, facsimile, or written correspondence.

PROPOSAL CONTACT:

Brooke Lindemann
Senior Buyer
Fort Bend County Travis Annex
301 Jackson, Suite 201
Richmond, Texas 77469
Brooke.Lindemann@fortbendcountytx.gov
Phone: 281.344.3929

4.0 SUBMISSION REQUIREMENTS:

4.1 Submission requirements: one (1) original proposal is required by RFP opening time of **2:00 PM on Tuesday, June 25, 2024**. Four (4) paper copies, and one (1) electronic response on flash drive are required to be submitted to Purchasing by 9:00 AM on Wednesday, June 26, 2024. Flash drive must contain only one (1) file in PDF format and must match written response identically. Failure to provide proper flash drive is cause for disqualification. Proposal shall be submitted to the address shown below. Proposal shall be signed, in ink, by a person having the authority to bind the firm in a contract.

Fort Bend County	Proposal Number: R24-064
Purchasing Department	Due Date: June 25, 2024
301 Jackson, Suite 201	Time: 2:00 PM (CST)
Richmond, Texas 77469	For: Information Technology Building

4.2 Respondents may submit their proposal any time prior to the Opening Date and time. The Respondent's name and address as well as a distinct reference to the Proposal number above shall be marked clearly on the submission. All proposals are time-stamped upon receipt and are securely kept, unopened, until the Opening Date. No responsibility will attach to the County, or any official or employee thereof, for the pre-opening of, post-opening of, or the failure to open a proposal not properly addressed and identified. No oral, telegraphic, telephonic, or facsimile proposals will be considered.

4.3 Proposals may be modified or withdrawn prior to the established opening date by delivering written notice to the proposal contact. Any alteration made prior to opening date and time shall be initialed by the signer of the proposal, guaranteeing authenticity.

4.4 Proposals time-stamped after the due date and time will not be considered and will be returned to the Respondent unopened. Regardless of the method used for delivery, respondents shall be wholly responsible for the timely delivery of submitted proposals.

4.5 The Respondent's name and address shall be clearly marked on all copies of the proposal.

5.0 INCURRED COSTS:

Those submitting proposals do so entirely at their expense. There is no expressed or implied obligation by the County to reimburse any individual or firm for any costs incurred in preparing or submitting proposals, for providing additional information when requested by the County or for participating in any selection interviews, including discovery (pre-contract negotiations) and contract negotiations.

6.0 ACCEPTANCE:

6.1 Submission of any proposal indicates a Respondent's acceptance of the conditions contained in this Proposal unless clearly and specifically noted otherwise in their proposal.

6.2 Furthermore, the County is not bound to accept a proposal on the basis of lowest price, and further, the County has the sole discretion and reserves the right to cancel this Proposal, to reject any and all proposals, to waive any and all informalities and or irregularities, or to re-advertise with either the identical or revised specifications, if it is deemed to be in the County's best interests. The County reserves the right to accept or reject any or all of the items in the proposal, and to award the contract in whole or in part and/or negotiate any or all items with individual Respondents if it is deemed in the County's best interest.

6.3 Although Fort Bend County desires to negotiate toward a contract with a selected Respondent, the Commissioners' Court may award the contract on the basis of the initial proposals received, without discussions. Therefore, each initial proposal should contain the Respondent's best terms.

7.0 INTERPRETATIONS, DISCREPANCIES, AND OMISSIONS:

7.1 It is incumbent upon each potential Respondent to carefully examine these specifications, terms, and conditions. Should any potential Respondent find discrepancies, omissions or ambiguities in this Proposal, the Respondent shall at once request in writing an interpretation from the County's Proposal Contact. Any inquiries, suggestions, or requests concerning interpretation, clarification or additional information shall be made in writing via e-mail only to the County's Proposal Contact, as specified in Section 3.0. Deadline for submission of questions and/or clarification is **Tuesday, June 18, 2024 at 10:00 AM. (CST).** Requests received after the deadline will not be responded to due to the time constraints of this Proposal process.

7.2 The issuance of a written addendum is the only official method by which interpretation, clarification or additional information will be given by the County. Only questions answered by formal written addenda will be binding. Oral and other interpretations or clarification will be without legal effect. If it becomes necessary to revise or amend any part of this Proposal, notice will be given by the County Purchasing Agent to all prospective Respondents who were sent a Proposal. The Respondent in their proposal shall acknowledge receipts of amendments. Each Respondent shall ensure that they have received all addenda and amendments to this Proposal before submitting their proposals.

8.0 TENTATIVE SCHEDULE:

Release of RFP:	May 26, 2024
Pre-RFP conference:	June 4, 2024
Deadline for Questions:	June 18, 2024
Submission Due Date:	June 25, 2024
Evaluation of Submissions:	June 27, 2024
Commissioners Court Permission to Negotiate:	July 9, 2024
Negotiations:	Beginning July 10, 2024
Final Contract Approval Commissioners Court:	August 13, 2024

9.0 PRE-RFP CONFERENCE:

A Pre-RFP conference will be conducted on **Tuesday, June 4, 2024 at 9:30 AM** (central). The pre-RFP conference will be held at the Fort Bend County Purchasing Department located in the Travis Annex at 301 Jackson, Suite 201, Richmond, Texas 77469. All vendors are encouraged to attend. A site visit will be conducted after the conference, if necessary.

10.0 RETENTION OF RESPONDENT'S MATERIAL:

The County reserves the right to retain all proposals regardless of which response is selected. All proposals and accompanying documents become the property of the County.

11.0 CERTIFICATE OF INDEPENDENT PRICE DETERMINATION:

By submission of a proposal, each Respondent certifies, that in connection with this procurement:

11.1 The prices in this proposal have been arrived at independently, without consultation, communication, or agreement with any other Respondent; with any competitor; or with any County employee(s) or consultant(s) for the purpose of restricting competition on any matter relating to this Proposal.

11.2 Unless otherwise required by law, the prices which have been quoted in this proposal have not been knowingly disclosed by the Respondent and will not knowingly be disclosed by the Respondent prior to award directly or indirectly to ny other Respondent or to any competitor; and;

11.3 No attempt has been made or will be made by the Respondent to induce any other person or firm to submit or not to submit a proposal for the purpose of restricting competition.

12.0 ASSIGNMENT:

The Respondent may not sell, assign, transfer or convey the contract resulting from this Proposal, in whole or in part, without the prior written approval from Fort Bend County Commissioners' Court.

13.0 CONFIDENTIAL MATTERS:

13.1 All data and information gathered by the Respondent and its agents, including this Proposal and all reports, recommendations, specifications, and data shall be treated by the Respondent and it's agents as confidential. The Respondent and it's agents shall not disclose or communicate the aforesaid matters to a third party or use them in advertising, publicity, propaganda, and/or in another job or jobs, unless written consent is obtained from the County.

13.2 Proposals will only be publicly received and acknowledged only so as to avoid disclosure of the contents to competing Respondents and kept secret during negotiation. However, all proposals shall be open for public inspection after the contract is awarded. Trade secrets and any material that is considered to be confidential information contained in the proposal and identified by Respondent as such will be treated as confidential to the extent allowable in the Open Records Act.

14.0 LIMITS OF SUBCONTRACTORS:

14.1 The County has approval rights over the use and/or removal of all subcontractors and/or vendor(s). Subcontractors shall conform to all County policies.

14.2 Any dispute between the Respondent and subcontractors, including any payment dispute, will be promptly remedied by the Respondent. Failure to promptly remedy or to make prompt payment to subcontractor may result in the withholding of funds from the Respondent by the County for any payments owed to the subcontractor.

15.0 JURISDICTION, VENUE, CHOICE OF LAW:

This Proposal and any contract resulting there from shall be governed by and construed according to the laws of the State of Texas. Should any portion of any contract be in conflict with the laws of the State of Texas, the State laws shall invalidate only that portion. The remaining portion of the contract(s) shall remain in effect. Any lawsuit shall be governed by Texas law and Fort Bend County, Texas shall be the venue for any action or proceeding that may be brought or arise out of, in connection with or by reason of this Proposal process and resulting Agreements.

16.0 INDEPENDENT CONTRACTOR:

The Respondent is an independent contractor and no employee or agent of the Respondent shall be deemed for any reason to be an employee or agent of the County.

17.0 AMERICANS WITH DISABILITIES ACT (ADA)

Proposals shall comply with all federal, state, county, and local laws concerning this type of products/service/equipment/project and the fulfillment of all ADA requirements.

18.0 DRUG-FREE WORKPLACE:

All Respondents shall provide any and all notices as may be required under the Drug-Free Workplace Act of 1988, 28 CFR Part 67, Subpart F, to their employees and all sub-contractors to insure that the County maintains a drug-free workplace.

19.0 PERFORMANCE AND PAYMENT BOND:

The Respondent shall post with Fort Bend County, not later than ten (10) days of the County's award of a contract, a performance and payment bond in the amount of one hundred percent (100%) of the total lump sum price in such form as is satisfactory by County. This bond shall be executed by a corporate surety company duly authorized and admitted to do business in the State of Texas and licensed to issue such a bond in the State of Texas. The Respondent shall notify its corporate surety of any contract changes.

20.0 POWER OF ATTORNEY:

An attorney-in-fact who signs a bid bond, performance bond or payment bond must file with each bond a certified and effectively dated copy of his or her power of attorney.

21.0 TEXAS ETHICS COMMISSION FORM 1295:

21.1 Effective January 1, 2016 all contracts executed by Commissioners Court, regardless of the dollar amount, will require completion of Form 1295 "Certificate of Interested Parties", per the new Government Code Statute §2252.908. All firms submitting a response to a formal Bid, RFP, SOQ or any contracts, contract amendments, renewals or change orders are required to complete the Form 1295 online through the State of Texas Ethics Commission website. Please visit:
https://www.ethics.state.tx.us/whatsnew/elf_info_form1295.htm.

21.2 On-line instructions:

21.2.1 Name of governmental entity is to read: Fort Bend County

21.2.2 Identification number use: RFP 24-064

21.2.3 Description is: Construction of Information Technology Building

21.3 Apparent low bidder(s) will be required to provide the Form 1295 within three (3) calendar days from notification; however, if your company is publicly traded you are not required to complete this form.

22.0 INSURANCE:

22.1 All respondents shall submit, with RFP, a current certificate of insurance indicating coverage in the amounts stated below. In lieu of submitting a certificate of insurance, respondents may submit, with RFP, a notarized statement from an Insurance company, authorized to conduct business in the State of Texas, and acceptable to Fort Bend County, guaranteeing the issuance of an insurance policy, with the coverage stated below, to the firm named therein, if successful, upon award of this Contract.

22.2 At contract execution, contractor shall furnish County with properly executed certificates of insurance, which shall evidence all insurance required and provide that such insurance shall not be canceled, except on 30 days prior written notice to County. Contractor shall provide certified copies of insurance endorsements and/or policies if requested by County. Contractor shall maintain such insurance coverage from the time Services commence until Services are completed and provide replacement certificates, policies and/or endorsements for any such insurance expiring prior to completion of Services. Contractor shall obtain such insurance written on an Occurrence form (or a Claims Made form for Professional Liability insurance) from such companies having Best's rating of A/VII or better, licensed or approved to transact business in the State of Texas, and shall obtain such insurance of the following types and minimum limits:

22.2.1 Workers' Compensation insurance. Substitutes to genuine Workers' Compensation Insurance will not be allowed.

22.2.2 Employers' Liability insurance with limits of not less than $1,000,000 per injury by accident, $1,000,000 per injury by disease, and $1,000,000 per bodily injury by disease.

22.2.3 Commercial general liability insurance with a limit of not less than $1,000,000 each occurrence and $2,000,000 in the annual aggregate. Policy shall cover liability for bodily injury, personal injury, and property damage and products/completed operations arising out of the business operations of the policyholder.

22.2.4 Business Automobile Liability coverage with a combined Bodily Injury/Property Damage limit of not less than $1,000,000 each accident. The policy shall cover liability arising from the operation of licensed vehicles by policyholder.

22.3 County and the members of Commissioners Court shall be named as additional insured to all required coverage except for Workers' Compensation and Professional Liability (if required). All Liability policies including Workers' Compensation written on behalf of contractor, excluding Professional Liability, shall contain a waiver of subrogation in favor of County and members of Commissioners Court.

22.4 If required coverage is written on a claims-made basis, contractor warrants that any retroactive date applicable to coverage under the policy precedes the effective date of the contract; and that continuous coverage will be maintained or an extended discovery period will be exercised for a period of two (2) years beginning from the time that work under the agreement is completed.

22.5 Builder's Risk Insurance: Contractor is required to provide proof before a Purchase Order is issued for this project and keep in full force and effect until the Transfer Date, Builders Risk Insurance, subject to policy terms and conditions, of direct physical loss or damage to property, materials, equipment and supplies which are to become an integral part of the Project, whether owned by Contractor, or subcontractors of every tier, and in which one or more of same has an insurable interest, while in transit, while at the Construction Site awaiting construction, during construction, and until the Transfer Date. Such insurance shall be maintained to cover, as nearly as practicable, the insurable value of such property, materials, equipment and supplies at risk, and shall contain a waiver of subrogation in favor of Contractor, Architect, subcontractors of any tier and Owner for loss or damage occurring during the Work and shall name Contractor as the named insured and Owner as additional insureds. All Builder's Risk Insurance proceeds shall be paid directly to the Contractor.

23.0 INDEMNIFICATION:

Respondent shall save harmless County from and against all claims, liability, and expenses, including reasonable attorney's fees, arising from activities of Respondent, its agents, servants or employees, performed under this agreement that result from the negligent act, error, or omission of Respondent or any of Respondent's agents, servants or employees.

23.1 Respondent shall timely report all such matters to Fort Bend County and shall, upon the receipt of any such claim, demand, suit, action, proceeding, lien or judgment, not later than the fifteenth day of each month; provide Fort Bend County with a written report on each such matter, setting forth the status of each matter, the schedule or planned proceedings with respect to each matter and the cooperation or assistance, if any, of Fort Bend County required by Respondent in the defense of each matter.

23.2 Respondent's duty to defend, indemnify and hold Fort Bend County harmless shall be absolute. It shall not abate or end by reason of the expiration or termination of any contract unless otherwise agreed by Fort Bend County in writing. The provisions of this section shall survive the termination of the contract and shall remain in full force and effect with respect to all such matters no matter when they arise.

23.3 In the event of any dispute between the parties as to whether a claim, demand, suit, action, proceeding, lien or judgment appears to have been caused by or appears to have arisen out of or in connection with acts or omissions of Respondent, Respondent shall never-the-less fully defend such claim, demand, suit, action, proceeding, lien or judgment until and unless there is a determination by a court of competent jurisdiction that the acts and omissions of Respondent are not at issue in the matter.

23.4 Respondent's indemnification shall cover, and Respondent agrees to indemnify Fort Bend County, in the event Fort Bend County is found to have been negligent for having selected Respondent to perform the work described in this request.

23.5 The provision by Respondent of insurance shall not limit the liability of Respondent under an agreement.

23.6 Respondent shall cause all trade contractors and any other contractor who may have a contract to perform construction or installation work in the area where work will be performed under this request, to agree to indemnify Fort Bend County and to hold it harmless from all claims for bodily injury and property damage that arise may from said Respondent's operations. Such provisions shall be in form satisfactory to Fort Bend County.

23.7 Loss Deduction Clause - Fort Bend County shall be exempt from, and in no way liable for, any sums of money which may represent a deductible in any insurance policy. The payment of deductibles shall be the sole responsibility of Respondent and/or trade contractor providing such insurance.

24.0 PREVAILING WAGES:

This project is subject to the prevailing wage rate requirements of Chapter 2258 of the Government Code. All persons employed by Contractor shall be compensated at not less than the rates shown below. Contractor shall keep detailed records of each of its workers and said records shall be made available to County for inspection at all reasonable times. The Contractor shall pay Fort Bend County sixty dollars ($60.00) for each worker employed by the Contractor for the provision of services described herein for each calendar day or part of the day that the worker is paid less than the below stated rates. Contractors may also visit www.wdol.gov/dba.aspx.

General Decision Number: TX20240247 01/05/2024
Superseded General Decision Number: TX20230247

State: Texas
Construction Type: Building

County: Fort Bend County in Texas.

BUILDING CONSTRUCTION PROJECTS (does not include single family homes or apartments up to and including 4 stories).

Note: Contracts subject to the Davis-Bacon Act are generally required to pay at least the applicable minimum wage rate required under Executive Order 14026 or Executive Order 13658. Please note that these Executive Orders apply to covered contracts entered into by the federal government that are subject to the Davis-Bacon Act itself, but do not apply to contracts subject only to the Davis-Bacon Related Acts, including those set forth at 29 CFR 5.1(a)(1).

If the contract is entered into on or after January 30, 2022, or the contract is renewed or extended (e.g., an option is exercised) on or after January 30, 2022: Executive Order 14026 generally applies to the contract. The contractor must pay all covered workers at least $17.20 per hour (or the applicable wage rate listed on this wage determination, if it is higher) for all hours spent performing on the contract in 2024.

If the contract was awarded on|or between January 1, 2015 and January 29, 2022, and the contract is not renewed or extended on or after January|30, 2022: Executive Order 13658 generally applies to the contract. The contractor must pay all covered workers at least $12.90 per hour (or the applicable wage rate listed on this wage determination, if it is higher) for all hours spent performing on that contract in 2024.

The applicable Executive Order minimum wage rate will be adjusted annually. If this contract is covered by one of the Executive Orders and a classification considered necessary for performance of work on the contract does not appear on this wage determination, the contractor must still submit a conformance request.

Additional information on contractor requirements and worker protections under the Executive Orders is available at http://www.dol.gov/whd/govcontracts.

Modification Number	Publication Date
0	01/05/2024

	Rates	Fringes
ASBE0022-009 07/03/2023		
ASBESTOS WORKER/HEAT & FROST INSULATOR (Duct, Pipe and Mechanical System Insulation)	$ 28.35	16.02
BOIL0074-003 07/01/2023		
BOILERMAKER	$ 37.00	24.64
CARP0551-008 04/01/2021		
CARPENTER (Excludes Acoustical Ceiling Installation, Drywall Hanging, Form Work and Metal Stud Installation)	$ 25.86	9.08
ELEC0716-005 08/29/2023		
ELECTRICIAN (Excludes Low Voltage Wiring and Installation of Alarms)	$ 34.50	10.41
ELEV0031-003 01/01/2023		
ELEVATOR MECHANIC	$ 49.15	37.335+a+b

FOOTNOTES:

A. 6% under 5 years based on regular hourly rate for all hours worked. 8% over 5 years based on regular hourly rate for all hours worked.

B. Holidays: New Year's Day; Memorial Day; Independence Day; Labor Day; Thanksgiving Day; Friday after Thanksgiving Day; Christmas Day; and Veterans Day.

	Rates	Fringes
ENGI0450-002 04/01/2014		
POWER EQUIPMENT OPERATOR		
Cranes	$ 34.85	9.85
IRON0084-002 06/01/2023		
IRONWORKER (ORNAMENTAL AND STRUCTURAL)	$ 27.51	8.13

PLAS0783-001 04/01/2023		
PLASTERER	$ 31.34	10.30
PLUM0068-002 10/01/2023		
PLUMBER	$ 34.86	11.68
PLUM0211-010 10/01/2023		
PIPEFITTER (Including HVAC Pipe Installation)	$ 38.31	12.61
SHEE0054-003 04/01/2020		
SHEET METAL WORKER (Excludes HVAC Duct and Unit Installation)	$ 29.70	13.85
SUTX2014-023 07/21/2014		
ACOUSTICAL CEILING MECHANIC	$ 16.41 **	3.98
BRICKLAYER	$ 19.86	0.00
CAULKER	$ 15.36 **	0.00
CEMENT MASON/CONCRETE FINISHER	$ 13.82 **	0.00
DRYWALL FINISHER/TAPER	$ 16.30 **	3.71
DRYWALL HANGER AND METAL STUD INSTALLER	$ 17.45	3.96
ELECTRICIAN (Alarm Installation Only)	$ 17.97	3.37
ELECTRICIAN (Low Voltage Wiring Only)	$ 18.00	1.68
FLOOR LAYER: Carpet	$ 20.00	0.00
FORM WORKER	$ 11.87 **	0.00
GLAZIER	$ 19.12	4.41
INSULATOR – BATT	$ 14.87 **	0.73
IRONWORKER, REINFORCING	$ 12.10 **	0.00
LABORER: Common or General	$ 10.79 **	0.00
LABORER: Mason Tender – Brick	$ 13.37 **	0.00

LABORER: Mason Tender - Cement/Concrete	$ 10.50 **	0.00
LABORER: Pipelayer	$ 12.94 **	0.00
LABORER: Roof Tearoff	$ 11.28 **	0.00
LABORER: Landscape and Irrigation	$ 9.49 **	0.00
LATHER	$ 19.73	0.00
OPERATOR: Backhoe/Excavator/Trackhoe	$ 14.10 **	0.00
OPERATOR: Bobcat/Skid Steer/Skid Loader	$ 13.93 **	0.00
OPERATOR: Bulldozer	$ 20.77	0.00
OPERATOR: Drill	$ 16.22 **	0.34
OPERATOR: Forklift	$ 15.64 **	0.00
OPERATOR: Grader/Blade	$ 13.37 **	0.00
OPERATOR: Loader	$ 13.55 **	0.94
OPERATOR: Mechanic	$ 17.52	3.33
OPERATOR: Paver (Asphalt, Aggregate, and Concrete)	$ 16.03 **	0.00
OPERATOR: Roller	$ 16.00 **	0.00
PAINTER (Brush, Roller and Spray), Excludes Drywall Finishing/Taping	$ 16.77 **	4.51
ROOFER	$ 15.40 **	0.00
SHEET METAL WORKER (HVAC Duct Installation Only)	$ 17.81	2.64
SHEET METAL WORKER (HVAC Unit Installation Only)	$ 16.00 **	1.61
SPRINKLER FITTER (Fire Sprinklers)	$ 22.17	9.70
TILE FINISHER	$ 12.00 **	0.00
TILE SETTER	$ 16.17 **	0.00

TRUCK DRIVER: 1/Single Axle Truck	$ 14.95 **	5.23
TRUCK DRIVER: Dump Truck	$ 12.39 **	1.18
TRUCK DRIVER: Flatbed Truck	$ 19.65	8.57
TRUCK DRIVER: Semi-Trailer Truck	$ 12.50 **	0.00
TRUCK DRIVER: Water Truck	$ 12.00 **	4.11
WATERPROOFER	$ 14.39 **	0.00

WELDERS - Receive rate prescribed for craft performing operation to which welding is incidental.

** Workers in this classification may be entitled to a higher minimum wage under Executive Order 14026 ($17.20) or 13658 ($12.90). Please see the Note at the top of the wage determination for more information. Please also note that the minimum wage requirements of Executive Order 14026 are not currently being enforced as to any contract or subcontract to which the states of Texas, Louisiana, or Mississippi, including their agencies, are a party.

Note: Executive Order (EO) 13706, Establishing Paid Sick Leave for Federal Contractors applies to all contracts subject to the Davis-Bacon Act for which the contract is awarded (and any solicitation was issued) on or after January 1, 2017. If this contract is covered by the EO, the contractor must provide employees with 1 hour of paid sick leave for every 30 hours they work, up to 56 hours of paid sick leave each year. Employees must be permitted to use paid sick leave for their own illness, injury or other health-related needs, including preventive care; to assist a family member (or person who is like family to the employee) who is ill, injured, or has other health-related needs, including preventive care; or for reasons resulting from, or to assist a family member (or person who is like family to the employee) who is a victim of, domestic violence, sexual assault, or stalking. Additional information on contractor requirements and worker protections under the EO is available at https://www.dol.gov/agencies/whd/government-contracts.

Unlisted classifications needed for work not included within the scope of the classifications listed may be added after award only as provided in the labor standards contract clauses (29CFR 5.5 (a) (1) (iii)).

The body of each wage determination lists the classification and wage rates that have been found to be prevailing for the cited type(s) of construction in the area covered by the wage determination. The classifications are listed in alphabetical order of ""identifiers"" that indicate whether the particular rate is a union rate (current union negotiated rate for local), a survey rate (weighted average rate) or a union average rate (weighted union average rate).

Union Rate Identifiers

A four letter classification abbreviation identifier enclosed in dotted lines beginning with characters other than ""SU"" or ""UAVG"" denotes that the union classification and rate were prevailing for that classification in the survey. Example: PLUM0198-005 07/01/2014. PLUM is an abbreviation identifier of the union which prevailed in the survey for this classification, which in this example would be Plumbers. 0198 indicates the local union number or district council number where applicable, i.e., Plumbers Local 0198. The next number, 005 in the example, is an internal number used in processing the wage determination. 07/01/2014 is the effective date of the most current negotiated rate, which in this example is July 1, 2014.
Union prevailing wage rates are updated to reflect all rate changes in the collective bargaining agreement (CBA) governing this classification and rate.

Survey Rate Identifiers

Classifications listed under the ""SU"" identifier indicate that no one rate prevailed for this classification in the survey and the published rate is derived by computing a weighted average rate based on all the rates reported in the survey for that classification. As this weighted average rate includes all rates reported in the survey, it may include both union and non-union rates. Example: SULA2012-007 5/13/2014. SU indicates the rates are survey rates based on a weighted average calculation of rates and are not majority rates. LA indicates the State of Louisiana. 2012 is the year of survey on which these classifications and rates are based. The next number, 007 in the example, is an internal number used in producing the wage determination. 5/13/2014 indicates the survey completion date for the classifications and rates under that identifier.
Survey wage rates are not updated and remain in effect until a new survey is conducted.

Union Average Rate Identifiers

Classification(s) listed under the UAVG identifier indicate that no single majority rate prevailed for those classifications; however, 100% of the data reported for the classifications was union data. EXAMPLE: UAVG-OH-0010 08/29/2014. UAVG indicates that the rate is a weighted union average rate. OH indicates the state. The next number, 0010 in the example, is an internal number used in producing the wage determination. 08/29/2014 indicates the survey completion date for the classifications and rates under that identifier.

A UAVG rate will be updated once a year, usually in January of each year, to reflect a weighted average of the current negotiated/CBA rate of the union locals from which the rate is based.

WAGE DETERMINATION APPEALS PROCESS

1.) Has there been an initial decision in the matter? This can be:
* an existing published wage determination
* a survey underlying a wage determination
* a Wage and Hour Division letter setting forth a position on a wage determination matter
* a conformance (additional classification and rate) ruling

On survey related matters, initial contact, including requests for summaries of surveys, should be with the Wage and Hour National Office because National Office has responsibility for the Davis-Bacon survey program. If the response from this initial contact is not satisfactory, then the process described in 2.) and 3.) should be followed.

With regard to any other matter not yet ripe for the formal process described here, initial contact should be with the Branch of Construction Wage Determinations. Write to:

Branch of Construction Wage Determinations
Wage and Hour Division
U.S. Department of Labor
200 Constitution Avenue, N.W.
Washington, DC 20210

2.) If the answer to the question in 1.) is yes, then an interested party (those affected by the action) can request review and reconsideration from the Wage and Hour Administrator (See 29 CFR Part 1.8 and 29 CFR Part 7). Write to:

Wage and Hour Administrator
U.S. Department of Labor
200 Constitution Avenue, N.W.
Washington, DC 20210

The request should be accompanied by a full statement of the interested party's position and by any information (wage payment data, project description, area practice material, etc.) that the requestor considers relevant to the issue.

3.) If the decision of the Administrator is not favorable, an interested party may appeal directly to the Administrative Review Board (formerly the Wage Appeals Board). Write to:

Administrative Review Board
U.S. Department of Labor
200 Constitution Avenue, N.W.
Washington, DC 20210

4.) All decisions by the Administrative Review Board are final.

25.0 PERMITS:

It shall be the sole responsibility of the successful Respondent to obtain any required permits in the name of Fort Bend County.

26.0 TAX EXEMPT:

Fort Bend County is exempt from state and local sales and use taxes under Section 151.309 of the Texas Tax Code. This project will be deemed a separate project for Texas tax purposes, and as such, Fort Bend County hereby issues its Texas Exemption for the purchase of any items qualifying for exemption under this project. Respondent is to issue its Texas Resale Certificate to vendors and subcontractors for such items qualifying for this exemption, and further, Respondent should state these items at cost.

27.0 NAME BRANDS:

Name Brands: Specifications may reference name brands and model numbers. It is not the intent of Fort Bend County to restrict these bids in such cases, but to establish a desired quality level of merchandise or to meet a pre-established standard due to like existing items. Bidders may offer items of equal stature and the burden of proof of such stature rests with them. Fort Bend County shall act as sole judge in determining equality and acceptability of products offered.

28.0 EVALUATION CRITERIA:

In order to facilitate the analysis of responses to this Proposal, Respondents are required to prepare their proposals in accordance with the instructions outlined in this part. Proposals should be prepared as simply as possible and provide a straightforward, concise description of the Respondent's capabilities to satisfy the requirements of the Proposal. Emphasis should be concentrated on accuracy, completeness, and clarity of content. All parts, pages, figures, and tables should be numbered and clearly labeled.

28.1 Respondents are required to follow the outline below when preparing their proposals:

Tab	Title
	Title Page
	Letter of Transmittal
	Table of Contents
	Executive Summary
1	Cost
2	Understanding Scope of Work
3	Firm's Experience
4	Staff Experience
5	Proposed Schedule
6	Overall Completeness of Proposal

28.2 Any exceptions to the Proposal requirements shall be identified in the applicable section.

28.3 Executive Summary - This part of the response to the Proposal should be limited to a brief narrative highlighting the Respondent's proposal. This section should not include cost quotations. Note that the executive summary should identify the primary contacts for the Respondent.

28.4 Respondents will be evaluated utilizing the factors, as weighted below:

Tab 1

Cost (weight factor = 45%)

- Complete Exhibit I.

Tab 2

Understanding Scope of Work (weight factor = 15%)

- Respondents must express, in detail, their understanding of this specific project. In addition, describe how the project requested will be provided and managed. Describe the approach your firm will take to the required collaboration, scheduling and coordination required for this project.

Tab 3

Firm's Experience (weight factor = 15%)

- Firm Experience with Projects of Similar Size and Complexity: Such experience must be in the form of providing general contracting services for similar facilities. List a minimum of three (3) similar projects completed within the last ten (10) years; provide the name and location of each project, detailed description of project, completion date, final cost, the client, and a contact person and phone number.

Tab 4

Staff Experience (weight factor = 10%)

- Staff Experience with Projects of Similar Size and Complexity: Such experience must be in the form of providing project management and construction services for similar facilities. List a minimum of three (3) similar projects completed within the last ten (10) years; provide the name and location of each project, the client, and a contact person and phone number and completion date. In addition, provide resumes for project superintendent and project manager who will be assigned to this project.

Tab 5

Proposed Schedule (weight factor = 10%)

- Provide project schedule.

Tab 6

Overall Completeness of Proposal (weight factor = 5%)

- Required Proof of Insurance
- Completed Respondent forms
- Completed W9 form
- Completed debt form
- Completed Contractor Acknowledgement of Stormwater Management Program form

29.0 AWARD:

The County will select the respondent whose proposal is the highest evaluated and responsible for the County. Contractual commitments are contingent upon the availability of funds, as evidenced by the issuance of a purchase order. All contracts are subject to the approval of the County's legal counsel and Commissioners' Court, prior to execution. Once awarded, the contract will be the final expression of the agreement between the parties and may not be altered, changed, or amended except by mutual agreement, in writing.

30.0 RETAINAGE:

Within thirty (30) days after receipt of each uncontested Application for Payment together with the supporting materials required, County shall advance to Contractor the uncontested amount requested in such uncontested Application for Payment, except *five* percent (5%) of the amount requested (hereinafter "Retainage") in each Application for Payment by County. The Retainage withheld shall be released upon final completion of the entire Project and verification of satisfactory work performed, unless grounds exist for withholding payment on account of other defaults by Contractor, including services provided by its sub-contractors.

31.0 LIQUIDATED DAMAGES:

If the Services are not substantially completed within the time for performance or within such additional time as may be extended by County, County will deduct from the final payment as liquidated damages and not as a penalty the sum of two hundred and fifty ($250.00) per calendar day that the Services are not substantially complete. Such sum is agreed upon as a reasonable and proper measure of the damages County will sustain.

32. STATE LAW REQUIREMENTS FOR CONTRACTS:

The contents of this section are required by Texas Law and are included by County regardless of content.

32.1 Agreement to Not Boycott Israel Chapter 2271 Texas Government Code:

Contractor verifies that if Contractor employs ten (10) or more full-time employees and this Agreement has a value of $100,000 or more, Contractor does not boycott Israel and will not boycott Israel during the term of this Agreement.

32.2 Texas Government Code Section 2251.152 Acknowledgment: By signature on vendor form, Contractor represents pursuant to Section 2252.152 of the Texas Government Code, that Contractor is not listed on the website of the Comptroller of the State of Texas concerning the listing of companies that are identified under Section 806.051, Section 807.051 or Section 2253.153.

33.0 HUMAN TRAFFICKING:

By acceptance of this contract, Contractor acknowledges that Fort Bend County is opposed to human trafficking and that no County funds will be used in support of services or activities that violate human trafficking laws.

34.0 REQUIRED FORMS:

All respondents submitting are required to complete the attached and return with submission:

34.1 Vendor Form

34.2 W9 Form

34.3 Tax Form/Debt/Residence Certification

34.4 Contractor Acknowledgement of Stormwater Management Program

35.0 EXHIBIT:

Exhibit I: Pricing

Exhibit II: Project Manual

Exhibit III: Plans

Form **W-9**
(Rev. December 2014)
Department of the Treasury
Internal Revenue Service

Request for Taxpayer Identification Number and Certification

Give Form to the requester. Do not send to the IRS.

Print or type
See **Specific Instructions** on page 2.

1 Name (as shown on your income tax return). Name is required on this line; do not leave this line blank.

2 Business name/disregarded entity name, if different from above

3 Check appropriate box for federal tax classification; check only **one** of the following seven boxes:

☐ Individual/sole proprietor or single-member LLC ☐ C Corporation ☐ S Corporation ☐ Partnership ☐ Trust/estate

☐ Limited liability company. Enter the tax classification (C=C corporation, S=S corporation, P=partnership) ▶ ____

Note. For a single-member LLC that is disregarded, do not check LLC; check the appropriate box in the line above for the tax classification of the single-member owner.

☐ Other (see instructions) ▶

4 Exemptions (codes apply only to certain entities, not individuals; see instructions on page 3):
Exempt payee code (if any) ____
Exemption from FATCA reporting code (if any) ____
(Applies to accounts maintained outside the U.S.)

5 Address (number, street, and apt. or suite no.)

6 City, state, and ZIP code

Requester's name and address (optional)

7 List account number(s) here (optional)

Part I Taxpayer Identification Number (TIN)

Enter your TIN in the appropriate box. The TIN provided must match the name given on line 1 to avoid backup withholding. For individuals, this is generally your social security number (SSN). However, for a resident alien, sole proprietor, or disregarded entity, see the Part I instructions on page 3. For other entities, it is your employer identification number (EIN). If you do not have a number, see *How to get a TIN* on page 3.

Note. If the account is in more than one name, see the instructions for line 1 and the chart on page 4 for guidelines on whose number to enter.

Social security number
☐☐☐ – ☐☐ – ☐☐☐☐

or

Employer identification number
☐☐ – ☐☐☐☐☐☐☐

Part II Certification

Under penalties of perjury, I certify that:

1. The number shown on this form is my correct taxpayer identification number (or I am waiting for a number to be issued to me); and
2. I am not subject to backup withholding because: (a) I am exempt from backup withholding, or (b) I have not been notified by the Internal Revenue Service (IRS) that I am subject to backup withholding as a result of a failure to report all interest or dividends, or (c) the IRS has notified me that I am no longer subject to backup withholding; and
3. I am a U.S. citizen or other U.S. person (defined below); and
4. The FATCA code(s) entered on this form (if any) indicating that I am exempt from FATCA reporting is correct.

Certification instructions. You must cross out item 2 above if you have been notified by the IRS that you are currently subject to backup withholding because you have failed to report all interest and dividends on your tax return. For real estate transactions, item 2 does not apply. For mortgage interest paid, acquisition or abandonment of secured property, cancellation of debt, contributions to an individual retirement arrangement (IRA), and generally, payments other than interest and dividends, you are not required to sign the certification, but you must provide your correct TIN. See the instructions on page 3.

Sign Here **Signature of U.S. person ▶** **Date ▶**

General Instructions

Section references are to the Internal Revenue Code unless otherwise noted.

Future developments. Information about developments affecting Form W-9 (such as legislation enacted after we release it) is at *www.irs.gov/fw9*.

Purpose of Form

An individual or entity (Form W-9 requester) who is required to file an information return with the IRS must obtain your correct taxpayer identification number (TIN) which may be your social security number (SSN), individual taxpayer identification number (ITIN), adoption taxpayer identification number (ATIN), or employer identification number (EIN), to report on an information return the amount paid to you, or other amount reportable on an information return. Examples of information returns include, but are not limited to, the following:

- Form 1099-INT (interest earned or paid)
- Form 1099-DIV (dividends, including those from stocks or mutual funds)
- Form 1099-MISC (various types of income, prizes, awards, or gross proceeds)
- Form 1099-B (stock or mutual fund sales and certain other transactions by brokers)
- Form 1099-S (proceeds from real estate transactions)
- Form 1099-K (merchant card and third party network transactions)
- Form 1098 (home mortgage interest), 1098-E (student loan interest), 1098-T (tuition)
- Form 1099-C (canceled debt)
- Form 1099-A (acquisition or abandonment of secured property)

Use Form W-9 only if you are a U.S. person (including a resident alien), to provide your correct TIN.

If you do not return Form W-9 to the requester with a TIN, you might be subject to backup withholding. See *What is backup withholding?* on page 2.

By signing the filled-out form, you:

1. Certify that the TIN you are giving is correct (or you are waiting for a number to be issued),

2. Certify that you are not subject to backup withholding, or

3. Claim exemption from backup withholding if you are a U.S. exempt payee. If applicable, you are also certifying that as a U.S. person, your allocable share of any partnership income from a U.S. trade or business is not subject to the withholding tax on foreign partners' share of effectively connected income, and

4. Certify that FATCA code(s) entered on this form (if any) indicating that you are exempt from the FATCA reporting, is correct. See *What is FATCA reporting?* on page 2 for further information.

Note. If you are a U.S. person and a requester gives you a form other than Form W-9 to request your TIN, you must use the requester's form if it is substantially similar to this Form W-9.

Definition of a U.S. person. For federal tax purposes, you are considered a U.S. person if you are:

• An individual who is a U.S. citizen or U.S. resident alien;

• A partnership, corporation, company, or association created or organized in the United States or under the laws of the United States;

• An estate (other than a foreign estate); or

• A domestic trust (as defined in Regulations section 301.7701-7).

Special rules for partnerships. Partnerships that conduct a trade or business in the United States are generally required to pay a withholding tax under section 1446 on any foreign partners' share of effectively connected taxable income from such business. Further, in certain cases where a Form W-9 has not been received, the rules under section 1446 require a partnership to presume that a partner is a foreign person, and pay the section 1446 withholding tax. Therefore, if you are a U.S. person that is a partner in a partnership conducting a trade or business in the United States, provide Form W-9 to the partnership to establish your U.S. status and avoid section 1446 withholding on your share of partnership income.

In the cases below, the following person must give Form W-9 to the partnership for purposes of establishing its U.S. status and avoiding withholding on its allocable share of net income from the partnership conducting a trade or business in the United States:

• In the case of a disregarded entity with a U.S. owner, the U.S. owner of the disregarded entity and not the entity;

• In the case of a grantor trust with a U.S. grantor or other U.S. owner, generally, the U.S. grantor or other U.S. owner of the grantor trust and not the trust; and

• In the case of a U.S. trust (other than a grantor trust), the U.S. trust (other than a grantor trust) and not the beneficiaries of the trust.

Foreign person. If you are a foreign person or the U.S. branch of a foreign bank that has elected to be treated as a U.S. person, do not use Form W-9. Instead, use the appropriate Form W-8 or Form 8233 (see Publication 515, Withholding of Tax on Nonresident Aliens and Foreign Entities).

Nonresident alien who becomes a resident alien. Generally, only a nonresident alien individual may use the terms of a tax treaty to reduce or eliminate U.S. tax on certain types of income. However, most tax treaties contain a provision known as a "saving clause." Exceptions specified in the saving clause may permit an exemption from tax to continue for certain types of income even after the payee has otherwise become a U.S. resident alien for tax purposes.

If you are a U.S. resident alien who is relying on an exception contained in the saving clause of a tax treaty to claim an exemption from U.S. tax on certain types of income, you must attach a statement to Form W-9 that specifies the following five items:

1. The treaty country. Generally, this must be the same treaty under which you claimed exemption from tax as a nonresident alien.

2. The treaty article addressing the income.

3. The article number (or location) in the tax treaty that contains the saving clause and its exceptions.

4. The type and amount of income that qualifies for the exemption from tax.

5. Sufficient facts to justify the exemption from tax under the terms of the treaty article.

Example. Article 20 of the U.S.-China income tax treaty allows an exemption from tax for scholarship income received by a Chinese student temporarily present in the United States. Under U.S. law, this student will become a resident alien for tax purposes if his or her stay in the United States exceeds 5 calendar years. However, paragraph 2 of the first Protocol to the U.S.-China treaty (dated April 30, 1984) allows the provisions of Article 20 to continue to apply even after the Chinese student becomes a resident alien of the United States. A Chinese student who qualifies for this exception (under paragraph 2 of the first protocol) and is relying on this exception to claim an exemption from tax on his or her scholarship or fellowship income would attach to Form W-9 a statement that includes the information described above to support that exemption.

If you are a nonresident alien or a foreign entity, give the requester the appropriate completed Form W-8 or Form 8233.

Backup Withholding

What is backup withholding? Persons making certain payments to you must under certain conditions withhold and pay to the IRS 28% of such payments. This is called "backup withholding." Payments that may be subject to backup withholding include interest, tax-exempt interest, dividends, broker and barter exchange transactions, rents, royalties, nonemployee pay, payments made in settlement of payment card and third party network transactions, and certain payments from fishing boat operators. Real estate transactions are not subject to backup withholding.

You will not be subject to backup withholding on payments you receive if you give the requester your correct TIN, make the proper certifications, and report all your taxable interest and dividends on your tax return.

Payments you receive will be subject to backup withholding if:

1. You do not furnish your TIN to the requester,

2. You do not certify your TIN when required (see the Part II instructions on page 3 for details),

3. The IRS tells the requester that you furnished an incorrect TIN,

4. The IRS tells you that you are subject to backup withholding because you did not report all your interest and dividends on your tax return (for reportable interest and dividends only), or

5. You do not certify to the requester that you are not subject to backup withholding under 4 above (for reportable interest and dividend accounts opened after 1983 only).

Certain payees and payments are exempt from backup withholding. See *Exempt payee code* on page 3 and the separate Instructions for the Requester of Form W-9 for more information.

Also see *Special rules for partnerships* above.

What is FATCA reporting?

The Foreign Account Tax Compliance Act (FATCA) requires a participating foreign financial institution to report all United States account holders that are specified United States persons. Certain payees are exempt from FATCA reporting. See *Exemption from FATCA reporting code* on page 3 and the Instructions for the Requester of Form W-9 for more information.

Updating Your Information

You must provide updated information to any person to whom you claimed to be an exempt payee if you are no longer an exempt payee and anticipate receiving reportable payments in the future from this person. For example, you may need to provide updated information if you are a C corporation that elects to be an S corporation, or if you no longer are tax exempt. In addition, you must furnish a new Form W-9 if the name or TIN changes for the account; for example, if the grantor of a grantor trust dies.

Penalties

Failure to furnish TIN. If you fail to furnish your correct TIN to a requester, you are subject to a penalty of $50 for each such failure unless your failure is due to reasonable cause and not to willful neglect.

Civil penalty for false information with respect to withholding. If you make a false statement with no reasonable basis that results in no backup withholding, you are subject to a $500 penalty.

Criminal penalty for falsifying information. Willfully falsifying certifications or affirmations may subject you to criminal penalties including fines and/or imprisonment.

Misuse of TINs. If the requester discloses or uses TINs in violation of federal law, the requester may be subject to civil and criminal penalties.

Specific Instructions

Line 1

You must enter one of the following on this line; **do not** leave this line blank. The name should match the name on your tax return.

If this Form W-9 is for a joint account, list first, and then circle, the name of the person or entity whose number you entered in Part I of Form W-9.

a. **Individual.** Generally, enter the name shown on your tax return. If you have changed your last name without informing the Social Security Administration (SSA) of the name change, enter your first name, the last name as shown on your social security card, and your new last name.

Note. ITIN applicant: Enter your individual name as it was entered on your Form W-7 application, line 1a. This should also be the same as the name you entered on the Form 1040/1040A/1040EZ you filed with your application.

b. **Sole proprietor or single-member LLC.** Enter your individual name as shown on your 1040/1040A/1040EZ on line 1. You may enter your business, trade, or "doing business as" (DBA) name on line 2.

c. **Partnership, LLC that is not a single-member LLC, C Corporation, or S Corporation.** Enter the entity's name as shown on the entity's tax return on line 1 and any business, trade, or DBA name on line 2.

d. **Other entities.** Enter your name as shown on required U.S. federal tax documents on line 1. This name should match the name shown on the charter or other legal document creating the entity. You may enter any business, trade, or DBA name on line 2.

e. **Disregarded entity.** For U.S. federal tax purposes, an entity that is disregarded as an entity separate from its owner is treated as a "disregarded entity." See Regulations section 301.7701-2(c)(2)(iii). Enter the owner's name on line 1. The name of the entity entered on line 1 should never be a disregarded entity. The name on line 1 should be the name shown on the income tax return on which the income should be reported. For example, if a foreign LLC that is treated as a disregarded entity for U.S. federal tax purposes has a single owner that is a U.S. person, the U.S. owner's name is required to be provided on line 1. If the direct owner of the entity is also a disregarded entity, enter the first owner that is not disregarded for federal tax purposes. Enter the disregarded entity's name on line 2, "Business name/disregarded entity name." If the owner of the disregarded entity is a foreign person, the owner must complete an appropriate Form W-8 instead of a Form W-9. This is the case even if the foreign person has a U.S. TIN.

Line 2

If you have a business name, trade name, DBA name, or disregarded entity name, you may enter it on line 2.

Line 3

Check the appropriate box in line 3 for the U.S. federal tax classification of the person whose name is entered on line 1. Check only one box in line 3.

Limited Liability Company (LLC). If the name on line 1 is an LLC treated as a partnership for U.S. federal tax purposes, check the "Limited Liability Company" box and enter "P" in the space provided. If the LLC has filed Form 8832 or 2553 to be taxed as a corporation, check the "Limited Liability Company" box and in the space provided enter "C" for C corporation or "S" for S corporation. If it is a single-member LLC that is a disregarded entity, do not check the "Limited Liability Company" box; instead check the first box in line 3 "Individual/sole proprietor or single-member LLC."

Line 4, Exemptions

If you are exempt from backup withholding and/or FATCA reporting, enter in the appropriate space in line 4 any code(s) that may apply to you.

Exempt payee code.

• Generally, individuals (including sole proprietors) are not exempt from backup withholding.

• Except as provided below, corporations are exempt from backup withholding for certain payments, including interest and dividends.

• Corporations are not exempt from backup withholding for payments made in settlement of payment card or third party network transactions.

• Corporations are not exempt from backup withholding with respect to attorneys' fees or gross proceeds paid to attorneys, and corporations that provide medical or health care services are not exempt with respect to payments reportable on Form 1099-MISC.

The following codes identify payees that are exempt from backup withholding. Enter the appropriate code in the space in line 4.

1—An organization exempt from tax under section 501(a), any IRA, or a custodial account under section 403(b)(7) if the account satisfies the requirements of section 401(f)(2)

2—The United States or any of its agencies or instrumentalities

3—A state, the District of Columbia, a U.S. commonwealth or possession, or any of their political subdivisions or instrumentalities

4—A foreign government or any of its political subdivisions, agencies, or instrumentalities

5—A corporation

6—A dealer in securities or commodities required to register in the United States, the District of Columbia, or a U.S. commonwealth or possession

7—A futures commission merchant registered with the Commodity Futures Trading Commission

8—A real estate investment trust

9—An entity registered at all times during the tax year under the Investment Company Act of 1940

10—A common trust fund operated by a bank under section 584(a)

11—A financial institution

12—A middleman known in the investment community as a nominee or custodian

13—A trust exempt from tax under section 664 or described in section 4947

The following chart shows types of payments that may be exempt from backup withholding. The chart applies to the exempt payees listed above, 1 through 13.

IF the payment is for . . .	THEN the payment is exempt for . . .
Interest and dividend payments	All exempt payees except for 7
Broker transactions	Exempt payees 1 through 4 and 6 through 11 and all C corporations. S corporations must not enter an exempt payee code because they are exempt only for sales of noncovered securities acquired prior to 2012.
Barter exchange transactions and patronage dividends	Exempt payees 1 through 4
Payments over $600 required to be reported and direct sales over $5,000[1]	Generally, exempt payees 1 through 5[2]
Payments made in settlement of payment card or third party network transactions	Exempt payees 1 through 4

[1] See Form 1099-MISC, Miscellaneous Income, and its instructions.

[2] However, the following payments made to a corporation and reportable on Form 1099-MISC are not exempt from backup withholding: medical and health care payments, attorneys' fees, gross proceeds paid to an attorney reportable under section 6045(f), and payments for services paid by a federal executive agency.

Exemption from FATCA reporting code. The following codes identify payees that are exempt from reporting under FATCA. These codes apply to persons submitting this form for accounts maintained outside of the United States by certain foreign financial institutions. Therefore, if you are only submitting this form for an account you hold in the United States, you may leave this field blank. Consult with the person requesting this form if you are uncertain if the financial institution is subject to these requirements. A requester may indicate that a code is not required by providing you with a Form W-9 with "Not Applicable" (or any similar indication) written or printed on the line for a FATCA exemption code.

A—An organization exempt from tax under section 501(a) or any individual retirement plan as defined in section 7701(a)(37)

B—The United States or any of its agencies or instrumentalities

C—A state, the District of Columbia, a U.S. commonwealth or possession, or any of their political subdivisions or instrumentalities

D—A corporation the stock of which is regularly traded on one or more established securities markets, as described in Regulations section 1.1472-1(c)(1)(i)

E—A corporation that is a member of the same expanded affiliated group as a corporation described in Regulations section 1.1472-1(c)(1)(i)

F—A dealer in securities, commodities, or derivative financial instruments (including notional principal contracts, futures, forwards, and options) that is registered as such under the laws of the United States or any state

G—A real estate investment trust

H—A regulated investment company as defined in section 851 or an entity registered at all times during the tax year under the Investment Company Act of 1940

I—A common trust fund as defined in section 584(a)

J—A bank as defined in section 581

K—A broker

L—A trust exempt from tax under section 664 or described in section 4947(a)(1)

M—A tax exempt trust under a section 403(b) plan or section 457(g) plan

Note. You may wish to consult with the financial institution requesting this form to determine whether the FATCA code and/or exempt payee code should be completed.

Line 5

Enter your address (number, street, and apartment or suite number). This is where the requester of this Form W-9 will mail your information returns.

Line 6

Enter your city, state, and ZIP code.

Part I. Taxpayer Identification Number (TIN)

Enter your TIN in the appropriate box. If you are a resident alien and you do not have and are not eligible to get an SSN, your TIN is your IRS individual taxpayer identification number (ITIN). Enter it in the social security number box. If you do not have an ITIN, see *How to get a TIN* below.

If you are a sole proprietor and you have an EIN, you may enter either your SSN or EIN. However, the IRS prefers that you use your SSN.

If you are a single-member LLC that is disregarded as an entity separate from its owner (see *Limited Liability Company (LLC)* on this page), enter the owner's SSN (or EIN, if the owner has one). Do not enter the disregarded entity's EIN. If the LLC is classified as a corporation or partnership, enter the entity's EIN.

Note. See the chart on page 4 for further clarification of name and TIN combinations.

How to get a TIN. If you do not have a TIN, apply for one immediately. To apply for an SSN, get Form SS-5, Application for a Social Security Card, from your local SSA office or get this form online at *www.ssa.gov*. You may also get this form by calling 1-800-772-1213. Use Form W-7, Application for IRS Individual Taxpayer Identification Number, to apply for an ITIN, or Form SS-4, Application for Employer Identification Number, to apply for an EIN. You can apply for an EIN online by accessing the IRS website at *www.irs.gov/businesses* and clicking on Employer Identification Number (EIN) under Starting a Business. You can get Forms W-7 and SS-4 from the IRS by visiting IRS.gov or by calling 1-800-TAX-FORM (1-800-829-3676).

If you are asked to complete Form W-9 but do not have a TIN, apply for a TIN and write "Applied For" in the space for the TIN, sign and date the form, and give it to the requester. For interest and dividend payments, and certain payments made with respect to readily tradable instruments, generally you will have 60 days to get a TIN and give it to the requester before you are subject to backup withholding on payments. The 60-day rule does not apply to other types of payments. You will be subject to backup withholding on all such payments until you provide your TIN to the requester.

Note. Entering "Applied For" means that you have already applied for a TIN or that you intend to apply for one soon.

Caution: *A disregarded U.S. entity that has a foreign owner must use the appropriate Form W-8.*

Part II. Certification

To establish to the withholding agent that you are a U.S. person, or resident alien, sign Form W-9. You may be requested to sign by the withholding agent even if items 1, 4, or 5 below indicate otherwise.

For a joint account, only the person whose TIN is shown in Part I should sign (when required). In the case of a disregarded entity, the person identified on line 1 must sign. Exempt payees, see *Exempt payee code* earlier.

Signature requirements. Complete the certification as indicated in items 1 through 5 below.

1. Interest, dividend, and barter exchange accounts opened before 1984 and broker accounts considered active during 1983. You must give your correct TIN, but you do not have to sign the certification.

2. Interest, dividend, broker, and barter exchange accounts opened after 1983 and broker accounts considered inactive during 1983. You must sign the certification or backup withholding will apply. If you are subject to backup withholding and you are merely providing your correct TIN to the requester, you must cross out item 2 in the certification before signing the form.

3. Real estate transactions. You must sign the certification. You may cross out item 2 of the certification.

4. Other payments. You must give your correct TIN, but you do not have to sign the certification unless you have been notified that you have previously given an incorrect TIN. "Other payments" include payments made in the course of the requester's trade or business for rents, royalties, goods (other than bills for merchandise), medical and health care services (including payments to corporations), payments to a nonemployee for services, payments made in settlement of payment card and third party network transactions, payments to certain fishing boat crew members and fishermen, and gross proceeds paid to attorneys (including payments to corporations).

5. Mortgage interest paid by you, acquisition or abandonment of secured property, cancellation of debt, qualified tuition program payments (under section 529), IRA, Coverdell ESA, Archer MSA or HSA contributions or distributions, and pension distributions. You must give your correct TIN, but you do not have to sign the certification.

What Name and Number To Give the Requester

For this type of account:	Give name and SSN of:
1. Individual	The individual
2. Two or more individuals (joint account)	The actual owner of the account or, if combined funds, the first individual on the account[1]
3. Custodian account of a minor (Uniform Gift to Minors Act)	The minor[2]
4. a. The usual revocable savings trust (grantor is also trustee)	The grantor-trustee[1]
b. So-called trust account that is not a legal or valid trust under state law	The actual owner[1]
5. Sole proprietorship or disregarded entity owned by an individual	The owner[3]
6. Grantor trust filing under Optional Form 1099 Filing Method 1 (see Regulations section 1.671-4(b)(2)(i)(A))	The grantor*
For this type of account:	**Give name and EIN of:**
7. Disregarded entity not owned by an individual	The owner
8. A valid trust, estate, or pension trust	Legal entity[4]
9. Corporation or LLC electing corporate status on Form 8832 or Form 2553	The corporation
10. Association, club, religious, charitable, educational, or other tax-exempt organization	The organization
11. Partnership or multi-member LLC	The partnership
12. A broker or registered nominee	The broker or nominee
13. Account with the Department of Agriculture in the name of a public entity (such as a state or local government, school district, or prison) that receives agricultural program payments	The public entity
14. Grantor trust filing under the Form 1041 Filing Method or the Optional Form 1099 Filing Method 2 (see Regulations section 1.671-4(b)(2)(i)(B))	The trust

[1] List first and circle the name of the person whose number you furnish. If only one person on a joint account has an SSN, that person's number must be furnished.

[2] Circle the minor's name and furnish the minor's SSN.

[3] You must show your individual name and you may also enter your business or DBA name on the "Business name/disregarded entity" name line. You may use either your SSN or EIN (if you have one), but the IRS encourages you to use your SSN.

[4] List first and circle the name of the trust, estate, or pension trust. (Do not furnish the TIN of the personal representative or trustee unless the legal entity itself is not designated in the account title.) Also see *Special rules for partnerships* on page 2.

***Note.** Grantor also must provide a Form W-9 to trustee of trust.

Note. If no name is circled when more than one name is listed, the number will be considered to be that of the first name listed.

Secure Your Tax Records from Identity Theft

Identity theft occurs when someone uses your personal information such as your name, SSN, or other identifying information, without your permission, to commit fraud or other crimes. An identity thief may use your SSN to get a job or may file a tax return using your SSN to receive a refund.

To reduce your risk:

- Protect your SSN,
- Ensure your employer is protecting your SSN, and
- Be careful when choosing a tax preparer.

If your tax records are affected by identity theft and you receive a notice from the IRS, respond right away to the name and phone number printed on the IRS notice or letter.

If your tax records are not currently affected by identity theft but you think you are at risk due to a lost or stolen purse or wallet, questionable credit card activity or credit report, contact the IRS Identity Theft Hotline at 1-800-908-4490 or submit Form 14039.

For more information, see Publication 4535, Identity Theft Prevention and Victim Assistance.

Victims of identity theft who are experiencing economic harm or a system problem, or are seeking help in resolving tax problems that have not been resolved through normal channels, may be eligible for Taxpayer Advocate Service (TAS) assistance. You can reach TAS by calling the TAS toll-free case intake line at 1-877-777-4778 or TTY/TDD 1-800-829-4059.

Protect yourself from suspicious emails or phishing schemes. Phishing is the creation and use of email and websites designed to mimic legitimate business emails and websites. The most common act is sending an email to a user falsely claiming to be an established legitimate enterprise in an attempt to scam the user into surrendering private information that will be used for identity theft.

The IRS does not initiate contacts with taxpayers via emails. Also, the IRS does not request personal detailed information through email or ask taxpayers for the PIN numbers, passwords, or similar secret access information for their credit card, bank, or other financial accounts.

If you receive an unsolicited email claiming to be from the IRS, forward this message to *phishing@irs.gov*. You may also report misuse of the IRS name, logo, or other IRS property to the Treasury Inspector General for Tax Administration (TIGTA) at 1-800-366-4484. You can forward suspicious emails to the Federal Trade Commission at: *spam@uce.gov* or contact them at *www.ftc.gov/idtheft* or 1-877-IDTHEFT (1-877-438-4338).

Visit IRS.gov to learn more about identity theft and how to reduce your risk.

Privacy Act Notice

Section 6109 of the Internal Revenue Code requires you to provide your correct TIN to persons (including federal agencies) who are required to file information returns with the IRS to report interest, dividends, or certain other income paid to you; mortgage interest you paid; the acquisition or abandonment of secured property; the cancellation of debt; or contributions you made to an IRA, Archer MSA, or HSA. The person collecting this form uses the information on the form to file information returns with the IRS, reporting the above information. Routine uses of this information include giving it to the Department of Justice for civil and criminal litigation and to cities, states, the District of Columbia, and U.S. commonwealths and possessions for use in administering their laws. The information also may be disclosed to other countries under a treaty, to federal and state agencies to enforce civil and criminal laws, or to federal law enforcement and intelligence agencies to combat terrorism. You must provide your TIN whether or not you are required to file a tax return. Under section 3406, payers must generally withhold a percentage of taxable interest, dividend, and certain other payments to a payee who does not give a TIN to the payer. Certain penalties may also apply for providing false or fraudulent information.

Job No.: ______________

TAX FORM/DEBT/ RESIDENCE CERTIFICATION
(for Advertised Projects)

Taxpayer Identification Number (T.I.N.): ____

Company Name submitting Bid/Proposal: ____

Mailing Address: ____

Are you registered to do business in the State of Texas? Yes No

If you are an individual, list the names and addresses of any partnership of which you are a general partner or any assumed name(s) under which you operate your business

____

____

I. **Property:** List all taxable property in Fort Bend County owned by you or above partnerships as well as any d/b/a names. Include real and personal property as well as mineral interest accounts. (Use a second sheet of paper if necessary.)

Fort Bend County Tax Acct. No.*	Property address or location**
____________________	____
____________________	____
____________________	____
____________________	____

** This is the property account identification number assigned by the Fort Bend County Appraisal District.*

*** For real property, specify the property address or legal description. For business personal property, specify the address where the property is located. For example, office equipment will normally be at your office, but inventory may be stored at a warehouse or other location.*

II. **Fort Bend County Debt -** Do you owe any debts to Fort Bend County (taxes on properties listed in I above, tickets, fines, tolls, court judgments, etc.)?

Yes No If yes, attach a separate page explaining the debt.

III. **Residence Certification** - Pursuant to Texas Government Code §2252.001 *et seq.*, as amended, Fort Bend County requests Residence Certification. §2252.001 *et seq.* of the Government Code provides some restrictions on the awarding of governmental contracts; pertinent provisions of §2252.001 are stated below:

(3) "Nonresident bidder" refers to a person who is not a resident.

(4) "Resident bidder" refers to a person whose principal place of business is in this state, including a contractor whose ultimate parent company or majority owner has its principal place of business in this state.

I certify that __________________________ is a Resident Bidder of Texas as defined in Government Code
[Company Name]
§2252.001.

I certify that __________________________ is a Nonresident Bidder as defined in Government Code
[Company Name]
§2252.001 and our principal place of business is ______________________________.
[City and State]

Mandatory Form

Contractor Acknowledgement of Storm Water Management Program

I hereby acknowledge that I am aware of the stormwater management program and standard operating procedures developed by Fort Bend County in compliance with the TPDES General Permit No. TXR040000. I agree to comply with all applicable best management practices and standard operating procedures while conducting my services for Fort Bend County. I agree to conduct all services in a manner that does not introduce illicit discharges of pollutants to streets, stormwater inlets, drainage ditches or any portion of the drainage system. The following materials and/or pollutant sources must not be discharged to the drainage system as a result of any services provided:

1. Grass clippings, leaves, mulch, rocks, sand, dirt or other waste materials resulting from landscaping activities, (except those materials resulting from ditch mowing or maintenance activities)
2. Herbicides, pesticides and/or fertilizers, (except those intended for aquatic use)
3. Detergents, fuels, solvents, oils and/or lubricants, other equipment and/or vehicle fluids,
4. Other hazardous materials including paints, thinners, chemicals or related waste materials,
5. Uncontrolled dewatering discharges, equipment and/or vehicle wash waters,
6. Sanitary waste, trash, debris, or other waste products
7. Wastewater from wet saw machinery,
8. Other pollutants that degrade water quality or pose a threat to human health or the environment.

Furthermore, I agree to notify Fort Bend County immediately of any issue caused by or identified by:

____

(Company/Contractor)

that is believed to be an immediate threat to human health or the environment.

____ ________________

Contractor Signature Date

____

Printed Name

____

Title

RFP 24-064
Construction of Information Technology Building

Exhibit I: Pricing

Total Bid

$______________________________________

Calendar days for completion ________________

Acknowledgement of Receipt of Addendum(s), if issued by Purchasing, to the Request for Proposal Document.

Addendum No 1 dated _____________________ Received _____________________

Addendum No 2 dated _____________________ Received _____________________

Addendum No 3 dated _____________________ Received _____________________

____
Name of Respondent

____
Signature of Authorized Representative

____
Printed Name of Representative

INFORMATION TECHNOLOGY BUILDING

FORT BEND COUNTY

1419 EUGENE HEIMANN CIRCLE | RICHMOND TEXAS 77469

SPECIFICATIONS / PROJECT MANUAL

ISSUED FOR PROPOSALS AND PERMIT
15 MAY 2024

Isani Consultants
Civil Engineer

Wong & Associates
Landscape Architect

Dally and Associates
Structural Engineer

Infrastructure Associates
Mechanical Electrical Plumbing Engineers

PGA Engineers
Telecommunications & Security

Jordan Consultants
Specifications/Project Manual

Architect

FSGROUP ARCHITECTS

DOCUMENT 00 01 10
TABLE OF CONTENTS

PROCUREMENT AND CONTRACTING DOCUMENTS GROUP

DIVISION 00 - PROCUREMENT AND CONTRACTING REQUIREMENTS

Balance of documents for Procurement and Contracting by Owner

SPECIFICATIONS GROUP

General Requirements Subgroup

DIVISION 01 - GENERAL REQUIREMENTS

Facility Construction Subgroup

DIVISION 02 - EXISTING CONDITIONS

NOT APPLICABLE

DIVISION 03 - CONCRETE

END OF DOCUMENT

DOCUMENT 00 31 32
GEOTECHNICAL DATA

1.01 GEOTECHNICAL DATA

A. Geotechnical Investigation Report has been prepared by the firm of Alpha Testing, LLC; Houston Texas.. This report is identified as “Geotechnical Exploration, Fort Bend County It Building; Eugene Heimann Circle, Richmond, Texas”, Alpha Report No. H232608, and is dated March 20, 2024.

1. The opinions expressed in this report are those of a geotechnical engineer and represent interpretations of subsoil conditions, tests, and results of analyses conducted by a geotechnical engineer. The Owner, the Architect, and the Architect's consultants, are not responsible for interpretations or conclusions drawn from the data.

2. This Document with its referenced attachments is part of the Procurement and Contracting Requirements for Project. They provide Owner's information for the Contractor's convenience and are intended to supplement rather than serve in lieu of the Contractor's own investigations. This Document and its attachments are not part of the Contract Documents.

B. A copy of the report is attached and shall be referred to for a complete description of the conditions at the site.

1.02 CONTRACTOR’S USE OF GEOTECHNICAL DATA

A. This report was obtained only for use by the Owner, the Architect, the Architect's consultants, in designing building foundations and pavements and is not a part of the Contract Documents. . The report and log of borings is available for the Contractor's information but are not a warranty of the subsurface conditions. The Contractor may use the report at his own risk.

B. Because subsurface conditions indicated by the soil borings are a sampling in relation to the entire construction area, and for other reasons, the Owner, the Architect, the Architect's consultants, and the firm reporting the subsurface conditions do not warranty the conditions below the depths of the borings or that the strata logged from the borings are necessarily typical of the entire site. Any party using the information described in the soil borings and geotechnical report shall accept full responsibility for its use.

C. The Contractor shall review the applicable portions of Geotechnical Investigation Report and the technical sections of this Project Manual. The Architect shall be notified of any discrepancies immediately. In the event of a conflict between the applicable portions of the Geotechnical Investigation Report and the technical sections, the stricter requirement shall govern.

D. The Contractor shall visit the site and acquaint himself with site conditions. Prior to bidding, the Contractor may make his own subsurface investigation to satisfy himself with site and subsurface conditions.

E. Make no deviations from the recommendations of the Geotechnical Investigation Report and the requirements of the Contract Documents without specific and written approval of the Owner or Architect.

END OF DOCUMENT

GEOTECHNICAL EXPLORATION

FORT BEND COUNTY IT BUILDING
Eugene Heimann Circle
Richmond, Texas
ALPHA Report No. H232608
March 20, 2024

Prepared for:

FORT BEND COUNTY FACILITIES MANAGEMENT & PLANNING
301 Jackson Street, Suite 301
Richmond, Texas 77469
Attention: James Knight

Prepared By:

ALPHA TESTING
A UES Company

ALPHA TESTING
A Universal Engineering Sciences Company

Geotechnical
Construction Materials
Environmental
TBPELS Firm No. 813

15811 Tuckerton Road
Houston, Texas 77095

Tel: 713.360.0460
Fax: 713.360.0481
www.alphatesting.com

March 20, 2024

Fort Bend County Facilities Management & Planning
301 Jackson Street, Suite 301
Richmond, Texas 77469
Attention: James Knight

Re: Geotechnical Exploration
Fort Bend County IT Building
Eugene Heimann Circle
Richmond, Texas
ALPHA Report No. H232608

Attached is the report of the geotechnical exploration performed for the project referenced above. This study was authorized by James Knight through an Agreement for Professional Geotechnical Services dated September 06, 2023 and performed in general accordance with ALPHA Proposal No. 99528, dated August 15, 2023.

This report contains results of field explorations and laboratory testing and an engineering interpretation of these with respect to available project characteristics. The results and analyses were used to develop recommendations to aid design and construction of foundations and pavement.

ALPHA TESTING, LLC appreciates the opportunity to be of service on this project. If we can be of further assistance, such as providing materials testing services during construction, please contact our office.

Sincerely,

ALPHA TESTING, LLC

03/20/2024

STATE OF TEXAS
DURAISAMY S. SARAVANATHIIBAN
123650
LICENSED
PROFESSIONAL ENGINEER

Duraisamy S. (Roy) Saravanathiiban, Ph.D., P.E.
Geotechnical Department Manager

Mark L. McKay, P.E.
Associate Principal

RS/MLM/rs
Copies: (1) Client

TABLE OF CONTENTS

ALPHA REPORT NO. H232608

1.0 PURPOSE AND SCOPE

The purpose of this geotechnical exploration is for ALPHA TESTING, LLC ("ALPHA") to evaluate for Fort Bend County Facilities Management & Planning ("Client") some of the physical and engineering properties of subsurface materials at selected locations on the subject site with respect to formulation of geotechnical design parameters for the proposed construction. The field exploration was accomplished by securing subsurface samples from widely spaced borings performed across the project site. Engineering analyses were performed from results of the field exploration and results of laboratory tests performed on representative samples.

Also included are general comments pertaining to reasonably anticipated construction problems and recommendations concerning earthwork and quality control testing during construction. This information can be used to evaluate subsurface conditions and to aid in ascertaining whether the construction meets project specifications.

Recommendations provided in this report were developed from information obtained in borings depicting subsurface conditions only at the specific boring locations and at the particular time designated on the Log of Boring sheets. Subsurface conditions at other locations may differ from those observed at the boring locations, and subsurface conditions at the boring locations may vary at different times of the year. The scope of work may not fully define the variability of subsurface materials and conditions that are present on the site.

The nature and extent of variations between borings may not become evident until construction. If significant variations then appear evident, our office should be contacted to re-evaluate our recommendations after performing on-site observations and possibly other tests.

2.0 PROJECT CHARACTERISTICS

It is proposed to construct a three-story building with associated paved parking and drives. The building will cover a plan area of about 18,000 sf. The project site is located off Eugene Heimann Circle, about 500 ft northeast from Richmond Parkway in Richmond, Texas. A vicinity map showing the project's general location is provided as Figure A-1, in Appendix A of this report. At the time of the field exploration, a portion of the project site was covered with asphalt paving and the remaining area was covered with grass and weeds.

We understand the foundation loads could be up to 200 kips. Site grading plans were not available at the time of report preparation. We have assumed final grade will be within 3 ft of existing. Site paving is expected to consist of Portland cement concrete (PCC).

3.0 FIELD EXPLORATION

Subsurface conditions on the site were explored by drilling a total of 8 test borings to depths of 5 to 50 ft in general accordance with ASTM Standard D 420 using standard rotary drilling equipment. The corresponding location of each boring is provided in Table A.

TABLE A BORING LOCATIONS AND DEPTHS		
Boring Locations	**Boring No.**	**Boring Depth, ft**
Building	B-1 and B-2	50
	B-3 and B-4	25
Paving	B-5 through B-8	5

The approximate location of each test boring is shown on the Boring Location Plan, Figure A-2, enclosed in the Appendix of this report. Details of drilling and sampling operations are briefly summarized in Methods of Field Exploration, Section A-3 of the Appendix.

Subsurface types encountered during the field exploration are presented on Log of Boring sheets included in the Appendix of this report. The boring logs contain our Field Technician's and Engineer's interpretation of conditions believed to exist between actual samples retrieved. Therefore, these boring logs contain both factual and interpretive information. Lines delineating subsurface strata on the boring logs are approximate and the actual transition between strata may be gradual.

4.0 LABORATORY TESTS

Selected samples of the subsurface materials were tested in the laboratory to evaluate certain engineering properties as a basis in providing recommendations for foundation design and earthwork construction. A brief description of testing procedures used in the laboratory can be found on Figure A-4 Methods of Laboratory Testing, in Appendix A of this report. Individual test results are presented on the boring log sheets enclosed in Appendix A.

5.0 GENERAL SUBSURFACE CONDITIONS

5.1 Local Geology

Based on a review of literature and public maps in our library, as well as our experience, the project site lies within the alluvial soils deposited by the Brazos River and its tributaries. The alluvium is a heterogeneous formation, containing interbedded layers of clays, fine sand, and silt.

5.2 Subsurface Stratigraphy

In general, lean clay (CL) and/or fat clay (CH) was encountered from the existing ground surface extending to the boring termination depths of 5 to 50 ft. In Boring B-1, asphalt paving (3 inches thick) followed by base material (about 3 inches thick) were encountered at the surface of the boring. In Borings B-7 and B-8, asphalt paving (2 inches thick) was encountered at the surface of the borings. In Borings B-3 and B-4, clayey sand (SC) was encountered at a depth of about 18 ft extending to a depth of about 23 ft. In Boring B-4, silty sand (SM) was encountered at a depth of about 2 ft extending to a depth of about 4 ft.

The letters in parenthesis represent the soils' classification according to the Unified Soil Classification System (ASTM D 2488). More detailed stratigraphic information is presented on the Logs of Boring sheets attached to this report.

5.3 Depth-to-Water

Borings were drilled using dry-auger techniques to measure depth-to-water in the open boreholes. Free water was encountered in Borings B-1 and B-2 at depths of about 38 to 45 ft below the existing ground surface during drilling operations. Free water was not encountered in the remaining borings.

The granular soils (clayey sand and silty sand) encountered in the borings are considered relatively permeable and are anticipated to have a rapid response to water movement. However, the lean clay and fat clay soils encountered in the borings are considered relatively impermeable and are expected to have a relatively slow response to water movement. Therefore, several days of observation would be required to evaluate actual groundwater levels within the depths explored. Also, the groundwater level at the site is anticipated to fluctuate seasonally depending on the amount of rainfall, prevailing weather conditions and subsurface drainage characteristics.

6.0 DESIGN RECOMMENDATIONS

The following design recommendations were developed on the basis of the previously described Project Characteristics (Section 2.0) and General Subsurface Conditions (Section 5.0). If project criteria should change, including the structure locations on the site, our office should conduct a review to determine if modifications to the recommendations are required. Further, it is recommended our office be provided with a copy of the final plans and specifications for review prior to construction.

The following design criteria given in this report were developed assuming the finish building pad elevation is constructed within 3 ft of existing grade. Substantial cutting and filling on the site (more than 3 ft) can alter the recommended foundation design parameters. Therefore, it is recommended our office be contacted before performing other cutting and filling on site to verify the appropriate design parameters are utilized for final foundation design.

Any imported fill soils used in the building pad area should have a plasticity index not greater than 20 and meet other general requirements as discussed in Section 7.3 below. It should be noted if fill sources other than assumed above are utilized or if soil with a plasticity index value above 20 are imported onto the site, the following recommendations provided herein should be reviewed by the Geotechnical Engineer-of-Record to determine if alternate recommendations are required.

6.1 Existing Paving and Possible Fill

Asphalt paving is present at a portion of the project site. Any soil disturbed due to removal of paving, any structures, or foundations should be re-compacted in accordance with recommendations provided in Section 7.3. All foundation elements of the previously existing structures should be removed or cut off at least 2 ft below finished grade or 2 ft below the new structural elements, whichever is deeper. All abandoned utility lines should be either removed or positively sealed to prevent possible water seepage into subgrade soils.

Fill soil was not encountered at the boring locations. Considering the project site is developed already, fill may be present in other areas of the site. In practice, it is difficult to accurately delineate fill soils that are similar to the native soils based on discrete test boreholes. Test pits could be performed prior to construction to assess the potential fill. ALPHA would be pleased to assist with a test pit program if desired.

If compaction records of the any existing fill are not available, the fill should be considered uncontrolled. All uncontrolled fill should be removed from the building areas. The resulting excavation should be properly backfilled with controlled fill as described in Section 7.3. Soils used to backfill the excavation or to raise site grades within the building pad area should consist of on-site or similar soils with a plasticity index of 20 or less.

6.2 Subgrade Improvement for Support of Foundations and Floor Slabs

A floor slab, foundations and flatwork supported within 3 ft of existing grade could experience soil-related potential seasonal movements of up to about 3½ inches. This potential seasonal movement was estimated in general accordance with methods outlined by Texas Department of Transportation (TxDOT) Test Method Tex-124-E, engineering judgment, and experience. Estimated movements were calculated assuming the moisture content of the in-situ soil within the normal zone of seasonal moisture content change varies between a “dry” condition and a “wet” condition as defined by Tex-124-E. Also, it was assumed a 1 psi surcharge load from the floor slab acts on the subgrade soils. Movements exceeding those predicted above could occur if the soils are exposed to an extended dry period, positive drainage of surface water is not maintained or if soils are subject to an outside water source, such as leakage from a utility line or subsurface moisture migration from off-site locations.

If some movement is tolerable (about 1 inch), the floor system and foundations of the proposed structure could be designed to bear uniformly on improved soils. The most appropriate method of subgrade improvement at this site includes over-excavating the existing material and placement of non-expansive material. A minimum of 5½ ft of select non-expansive material should be placed beneath the slab. Non-expansive material could consist of select fill or flexible base, as described in Section 7.3.

The undercut should extend throughout the building limits, at least 5 ft beyond the perimeter of the building, and under adjoining flatwork. In major entrance areas or areas where movement is considered critical, select material should extend at least 10 ft beyond the perimeter of the building. However, select material extending beyond building lines should be capped with a 1-ft thick layer of clayey type soil (material with a plasticity index of at least 25) compacted as recommended in Section 7.3 to inhibit infiltration of surface water into the select material and below the building.

This improvement procedure will not eliminate future movement of a soil supported floor slab or other at-grade structures. In choosing this method of slab movement reduction due to shrink/swell of soils, the Owner is accepting some post construction movement (about 1 inch) of the slabs.

The use of a vapor retarder should be considered beneath interior concrete floor slabs in areas with moisture sensitive flooring. When conditions warrant the use of a vapor retarder, the slab designer and slab contractor should refer to ACI 302 for procedures and cautions about the use and placement of a vapor retarder.

6.3 Shallow Footing Foundation System

The structural frame for the planned building may be supported using a shallow footing foundation system following subgrade improvement as discussed in Section 6.2 to reduce potential soil related shrink/swell movements to about 1 inch. Footings may be designed using a net allowable soil bearing pressure of 2.5 kips per square foot. The above bearing pressure is applicable for footings bearing on select, non-expansive soils placed as recommended in Section 6.2 and Section 7.3 of this report. In using net pressure, the weight of the footing and backfill over the footing, including the weight of the floor slab need not be considered. Footings subject to lateral forces or overturning should be proportioned such that the soil reaction force acting on the bottom of the footing lies within the middle one-third of the footing.

All exterior footings should be located at a depth of at least 2 ft below final exterior grade as measured adjacent to the building. Interior footings may be supported at a nominal depth below the bottom of the floor slabs. Wall footings should have a least dimension of 12 inches in width and column footings should have a least dimension of 18 inches for bearing capacity considerations.

The resulting total foundation movements (following subgrade improvement to reduce potential movements to about 1 inch as discussed in Section 6.2) due to foundation loads and from shrinking and swelling of active clays are estimated to be limited and not exceed about 1 inch. Differential movements between individual footings can approach total movements. Careful field inspection of footing excavations will contribute substantially to reducing foundation movements.

Careful monitoring during construction is necessary to locate any pockets or seams of unsuitable materials, which might be encountered in excavations for footings. Any uncontrolled fill soils and other unsuitable materials encountered at the foundation bearing level should be removed to expose suitable firm native soils. Foundation undercuts can be replaced with lean concrete (about 2,000 psi strength at 28 days), structural concrete, or backfill compacted to at least 98 percent of standard Proctor maximum dry density (ASTM D 698) and at a moisture content within 2 percentage points of the material's optimum moisture content.

Resistance to sliding will be developed by friction along the base of the footings and passive earth pressure acting on the vertical face of the footing and a key installed in the base of the footings, if required. We recommend a coefficient of base friction of 0.3 be used along the bottom of the footing. The available passive earth resistance on the vertical face of the footing and a key constructed in the base of the footing may be calculated using an allowable uniform passive earth pressure of 500 psf below a depth of 2 ft from adjacent grade.

6.4 Parking and Drive Areas

Sandy lean clay (CL) soils encountered near the existing ground surface in the borings, or similar materials used as engineered fill for grading the site, will likely constitute the pavement subgrade for most parking and drive areas. To permit correlation between information from test borings and actual subgrade conditions exposed during construction, a qualified Geotechnical Engineer should be retained to provide subgrade monitoring and testing during construction. If there is any change in project criteria, the recommendations contained in this report should be reviewed by our office.

Calculations used to determine the required pavement thickness are based only on the physical and engineering properties of the materials used and conventional thickness determination procedures. Pavement joining buildings should be constructed with a curb and the joint between the building and curb should be sealed. Related civil design factors such as subgrade drainage, shoulder support, cross-sectional configurations, surface elevations, reinforcing steel, joint design and environmental factors will significantly affect the service life and must be included in preparation of the construction drawings and specifications, but all were not included in the scope of this study. Normal periodic maintenance will be required for all pavements to achieve the design life of the pavement system.

Please note, the recommended pavement sections provided are considered the minimum necessary to provide satisfactory performance based on the expected traffic loading. In some cases, local municipal minimum standards for pavement section construction may exceed those provided.

Mechanical treatment of the pavement subgrade soil will not prevent normal seasonal movement of the underlying untreated materials. Pavement and other flatwork will have the same potential for movement as slabs constructed directly on the existing undisturbed soils (up to about 3½ inches). Good perimeter surface drainage with a minimum slope of 2 percent away from the pavement is recommended. The use of sand as a leveling course below pavement supported on expansive clays should be avoided. Normal maintenance of pavement should be expected over the life of the structures.

Our recommendations on subgrade stabilization are preliminary. The actual depth and type of stabilization should be determined in the field at the time of construction just after site stripping and proofrolling. Furthermore, the type and amount of the stabilizer may vary depending on the final grade elevation and the soil type encountered.

We recommend stabilization procedures (if utilized) extend at least 1 ft beyond the edge of the pavement to reduce effects of seasonal shrinking and swelling upon the extreme edges of pavement.

When small or inaccessible areas are encountered where it is impracticable for standard mixing equipment to work, the above recommendations for chemical treatment may be substituted with an equivalent thickness of cement-treated sand.

6.4.1 Pavement Subgrade Preparation with Lime-Fly Ash or Cement

Where low plastic materials such as sandy clay with a plasticity index of 15 or less are encountered at the pavement subgrade level, the exposed surface of the pavement subgrade soils should be scarified to a depth of at least 6 inches. Then, the scarified soils in these areas should be chemically treated (lime-fly ash or cement modification) as described below and compacted to at least 95 percent of standard Proctor maximum dry density (ASTM D 698) and within the range of 2 percent below to 2 percentage points above the material's optimum moisture content.

Lime-fly ash or cement modification of the granular subgrade soils is recommended to aid in compaction of the subgrade soils and reduce future maintenance of pavement. The purpose of the lime-fly ash or cement modification is not necessarily to increase the subgrade strength, but to reduce the tendency of the granular soils to "pump" up or migrate through cracks and joints in the pavement over time when the subgrade becomes wet. The use of lime-fly ash or cement will also aid in compaction of the loose granular soils.

If lime-fly ash modification is used, the exposed surface of the pavement subgrade soils should be scarified to a depth of 6 inches and mixed with at least 3 percent hydrated lime and 7 percent fly ash (by dry unit weight) in conformance with TxDOT Standard Specifications Item 265. The selected Fly-Ash should be in accordance with ASTM C 618, Class C; and have a minimum CaO content of 20 percent. Lime-Fly Ash treated subgrade soils should be compacted to a minimum of 95 percent of the maximum density at a moisture content within the range of optimum moisture content to 3 percentage points above the optimum moisture content as determined by ASTM D 698.

If cement modification is used, the exposed surface of the pavement subgrade soils should be scarified to a depth of 6 inches and mixed with at least 4 percent Portland cement (by dry unit weight) in conformance with TxDOT Standard Specification Item 275. Assuming an in-place unit weight of 110 pcf for the pavement subgrade soils, this percentage of cement equates to about 20 lbs of cement per square yard of subgrade treated for a depth of 6 inches or about 27 lbs of cement per square yard of subgrade treated for a depth of 8 inches. The soil-cement mixture should be compacted to at least 95 percent of standard Proctor maximum dry density (ASTM D 698) and within the range of -1 to +3 percentage points of the mixture's optimum moisture content.

6.4.2 Pavement Subgrade Preparation with Lime

Where sandy clay (CL) materials with PI greater than 15 are encountered at the pavement subgrade level, the exposed surface of the pavement subgrade soil should be scarified to a depth of 6 inches and mixed with a sufficient quantity of hydrated lime to reduce the soil-lime mixture plasticity index to 15 or less in conformance with TxDOT Standard Specifications Item 260. The optimum lime content is the amount of lime necessary to achieve a pH of 12.4 (which represents lime fixation).

The actual amount of lime required should be confirmed by additional laboratory tests (ASTM C 977 Appendix XI) prior to construction. However, for estimating purposes, we recommend that 6 percent lime by weight be assumed for treatment, resulting in an application rate of 30 lbs of lime per square yard of treated area (based on an assumed unit weight of 110 pcf) for a depth of 6 inches. For construction purposes, we recommend that the optimum lime content of the subgrade soils be determined by laboratory testing. Lime-treated subgrade soils should be compacted to a minimum 95 percent of the maximum density at a moisture content within the range of optimum moisture content to 3 percentage points above the optimum moisture content as determined by TxDOT Test Method Tex-114-E.

6.4.3 PCC Pavement Section

Following subgrade improvement as recommended in Section 6.4.1, PCC (reinforced), pavement sections are recommended in Table B.

TABLE B - RECCOMENDED PCC PAVEMENT SECTIONS		
Paving Areas and/or Type	**Subgrade Thickness, Inches**	**PCC Thickness, Inches**
Parking Areas Subjected Exclusively to Passenger Vehicle Traffic Up to 75,000 ESALs	Lime/Fly Ash or Cement Modified, 6	5
Drive Lanes, Fire Lanes, Areas Subject to Light Volume Truck Traffic Up to 700,000 ESALs	Lime/Fly Ash or Cement Modified, 6	6
Dumpster Traffic Areas, Areas Subject to Moderate Volume Truck Traffic Up to 1,400,000 ESALs	Lime/Fly Ash or Cement Modified, 6	7

In the table above, one ESAL is equal to one 18-kip Equivalent Single Axle Load. If higher ESAL counts are expected, ALPHA should be contacted for additional recommendations.

PCC should have a minimum compressive strength of 3,000 psi at 28 days in parking areas subjected exclusively to passenger vehicle traffic and drive lane traffic (5-inch and 6-inch PCC sections). We recommend a minimum compressive strength of 3,500 psi at 28 days for areas subject to truck and dumpster traffic (7-inch PCC section). Concrete should be designed with 5±1 percent entrained air. Joints in concrete paving should not exceed 15 ft. Reinforcing steel should consist of No. 3 bars placed at 18 inches on-center in two directions for the 5-inch and 6-inch PCC sections. Reinforcing steel should consist of No. 4 bars placed at 18 inches on-center in two directions for the 7-inch PCC section.

6.5 Flatwork

Flatwork and any other soil-supported structural elements will be subjected to the same level of movement as discussed in Section 6.2 (up to about 3½ inches). If this level of movement is unacceptable, the subgrade improvement procedures as discussed in Section 6.2 could be considered for reduction in soil movement in areas where post-construction movements would be critical.

6.6 IBC Seismic Coefficients

The Site Class for seismic design is based on several factors that include soil profile (soil or rock), shear wave velocity, and strength, averaged over a depth of 100 ft. Based on Section 1613.3.2 of the 2012 International Building Code and Table 20.3-1 in the 2010 ASCE-7, we recommend using Site Class D (stiff soil) for seismic design at this site.

Based on Tables 1613.5.6(1) and 1613.5.6(2), and calculations performed using a Java program titled, "Seismic Hazard Curves and Uniform Hazard Response Spectra" published by the United States Geological Survey (USGS), the Seismic Design Category for the short period response accelerations and the 1 second response accelerations for the project site is **A** for all occupancy categories.

6.7 Corrosion

A representative sample obtained from the borings was tested for soluble sulfate concentrations, pH and electrical resistivity. Results of these laboratory tests are presented in Table C.

TABLE C
Corrosion Test Results

Sample		Type of Material	Resistivity ohm-cm	pH	Sulfates ppm
Boring No.	**Depth, ft**				
B-3	8-10	Reddish brown LEAN CLAY	1,160	8.1	56.1

Based on results of these tests, the corrosion potential of metal utility lines is anticipated to be mild to high and metal utility lines will require corrosion protection. Based on the soluble sulfate test results, the risk of sulfate attack on Portland cement concrete structures is considered to be very low.

6.8 Drainage and Other Considerations

Adequate drainage should be provided to reduce seasonal variations in the moisture content of foundation soils. All pavement and sidewalks within 10 ft of the structure should be sloped away from the building to prevent ponding of water around the foundations. Final grades within 10 ft of the structure should be adjusted to slope away from the structure at a minimum slope of 2 percent. Maintaining positive surface drainage throughout the life of the structure is essential.

In areas with pavement or sidewalks adjacent to the new structure, a positive seal must be maintained between the structure and the pavement or sidewalk to minimize seepage of water into the underlying supporting soils. Post-construction movement of pavement and flatwork is common. Normal maintenance should include examination of all joints in paving and sidewalks, etc. as well as re-sealing where necessary.

Several factors relate to civil and architectural design and/or maintenance, which can significantly affect future movements of the foundation and floor slab system:

- Preferably, a complete system of gutters and downspouts should carry runoff water a minimum of 5 ft from the completed structure.

- Large trees and shrubs should not be allowed closer to the foundations than a horizontal distance equal to roughly one-half of their mature height due to their significant moisture demand upon maturing.

- Moisture conditions should be maintained "constant" around the edge of the slabs. Ponding of water in planters, in unpaved areas, and around joints in paving and sidewalks can cause slab movements beyond those predicted in this report.

- Planter box structures placed adjacent to the building should be provided with a means to assure concentrations of water are not available to the subsoil stratigraphy.

Trench backfill for utilities should be properly placed and compacted as outlined in Sections 7.3 and 7.4 of this report and in accordance with requirements of local City standards. Since granular bedding backfill is used for most utility lines, the backfilled trench should not become a conduit and allow access for surface or subsurface water to travel toward the new structures. Concrete cut-off collars or clay plugs should be provided where utility lines cross building lines to prevent water from traveling in the trench backfill and entering beneath the structures.

7.0 GENERAL CONSTRUCTION PROCEDURES AND GUIDELINES

Variations in subsurface conditions could be encountered during construction. To permit correlation between test boring data and actual subsurface conditions encountered during construction, it is recommended a registered Professional Engineering firm be retained to observe construction procedures and materials.

Some construction problems, particularly degree or magnitude, cannot be anticipated until the course of construction. The recommendations offered in the following paragraphs are intended not to limit or preclude other conceivable solutions, but rather to provide our observations based on our experience and understanding of the project characteristics and subsurface conditions encountered in the borings.

7.1 Site Preparation and Grading

Fill soil was not encountered at the boring locations. Considering the project site is developed already, existing uncontrolled fill may be present in other areas of the site. Uncontrolled fills frequently contain trash, debris, concrete rubble, construction debris, boulders, and other unsuitable materials. Excavation and grading contracts should include provision for removal of unsuitable materials from the project site.

All areas supporting floor slabs, foundations, flatwork, or areas to receive new fill should be properly prepared.

- After completion of the necessary stripping, clearing, and excavating and prior to placing any required fill, the exposed soil subgrade should be carefully evaluated by probing and testing. Any undesirable material (organic material, wet, soft, or loose soil) still in place should be removed.

- The exposed soil subgrade should be further evaluated by proof-rolling with a heavy pneumatic tired roller, loaded dump truck or similar equipment weighing approximately 20 tons to check for pockets of soft or loose material hidden beneath a thin crust of possibly better soil.

- Proof-rolling procedures should be observed routinely by a Professional Engineer, or his designated representative. Any undesirable material (organic material, wet, soft, or loose soil) exposed during the proofroll should be removed and replaced with well-compacted material as outlined in Section 7.3.

- Prior to placement of any fill, the exposed soil subgrade should then be scarified to a minimum depth of 6 inches and recompacted as outlined in Section 7.3.

If fill is to be placed on existing slopes (natural or constructed) steeper than six horizontal to one vertical (6:1), the fill materials should be benched into the existing slopes in such a manner as to provide a minimum bench-key width of five (5) ft. This should provide a good contact between the existing soils and new fill materials, reduce potential sliding planes, and allow relatively horizontal lift placements.

Slope stability analysis of embankments (natural or constructed) was not within the scope of this study.

The contractor is responsible for designing any excavation slopes, temporary sheeting or shoring. Design of these structures should include any imposed surface surcharges. Construction site safety is the sole responsibility of the contractor, who shall also be solely responsible for the means, methods and sequencing of construction operations. The contractor should also be aware that slope height, slope inclination or excavation depths (including utility trench excavations) should in no case exceed those specified in local, state and/or federal safety regulations, such as OSHA Health and Safety Standard for Excavations, 29 CFR Part 1926, or successor regulations. Stockpiles should be placed well away from the edge of the excavation and their heights should be controlled so they do not surcharge the sides of the excavation. Surface drainage should be carefully controlled to prevent flow of water over the slopes and/or into the excavations. Construction slopes should be closely observed for signs of mass movement, including tension cracks near the crest or bulging at the toe. If potential stability problems are observed, a geotechnical engineer should be contacted immediately. Shoring, bracing or underpinning required for the project (if any) should be designed by a professional engineer registered in the State of Texas.

Due to the nature of the sandy clay soils found near the surface at the borings, traffic of heavy equipment (including heavy compaction equipment) may create pumping and general deterioration of shallow soils. Therefore, some construction difficulties should be anticipated during periods when these soils are saturated.

7.2 Foundation Excavations

All foundation excavations should be monitored to verify foundations bear on suitable material. The bearing stratum exposed in the base of all foundation excavations should be protected against any detrimental change in conditions. Unsuitable materials encountered at the bearing level of shallow foundations should be removed and replaced with structural concrete, lean concrete flowable fill, flexible base or compacted non-expansive material. The requirements for flexible base and non-expansive material are described in Section 7.3 below. All concrete for foundations should be placed as soon as practical after the excavation is made.

Surface runoff should be drained away from excavations and not allowed to pond in the bottom of the excavation. Concrete for foundations should be placed as soon as practical after the excavation is made. That is, the exposed foundation soils should not be allowed to become excessively dry or wet before placement of concrete. If delays occur, foundation excavations should be slightly widened, deepened and cleaned in order to provide a fresh bearing surface.

7.3 Fill Compaction

Select Fill (Non-Expansive Fill): Select fill used as non-expansive fill in the building areas should have a liquid limit less than 40, a plasticity index (PI) not less than 10 nor greater than 20. Select fill should not contain deleterious material and debris. Select fill should be compacted to a dry density of at least 95 percent of standard Proctor maximum dry density (ASTM D 698) and within the range of -1 to +3 percentage points of the material's optimum moisture content. The plasticity index and liquid limit of material used as select, non-expansive fill should be verified during fill placement using laboratory tests.

Flexible Base Material (Non-Expansive Fill): Flexible base material used as non-expansive fill for the building pad areas, for foundation improvement, and as backfill for foundation undercuts should meet the requirements of TxDOT Standard Specifications Item 247, Type A or D, Grade 1-2. The material should be compacted to a minimum 95 percent of standard Proctor maximum dry density (ASTM D 698) and within -2 to +2 percentage points of the material's optimum moisture content.

Clay soils to be used as fill at the site outside of the building pad areas should be compacted to a dry density of at least 95 percent of standard Proctor maximum dry density (ASTM D 698) and within the range of 1 percentage point below to 3 percentage points above the material's optimum moisture content. Clayey soil materials used as fill should be processed and the largest particle or clod should be less than 6 inches prior to compaction.

Granular soils to be used as fill at the site outside the building area should be compacted to a dry density of at least 95 percent of standard Proctor maximum dry density (ASTM D 698) and within the range of 2 percentage point below to 2 percentage points above the material's optimum moisture content. It may be necessary to mix about 2 to 4 percent cement into the granular soils to improve the compaction characteristics of these materials.

Compaction should be accomplished by placing fill in about 8-inch thick loose lifts and compacting each lift to at least the specified minimum dry density. Field density and moisture content tests should be performed on each lift.

7.4 Utilities and Deep Fills

In cases where utility lines and/or deep fills are more than 10 ft deep, the fill/backfill below 10 ft should be compacted to at least 100 percent of standard Proctor maximum dry density (ASTM D 698) and within –2 to +2 percentage points of the material's optimum moisture content. The portion of the fill/backfill shallower than 10 ft should be compacted as previously outlined. Density tests should be performed on each lift and should be performed as the trench is being backfilled.

Even if fill is properly compacted, fills in excess of about 10 ft are still subject to settlements over time of up to about 1 to 2 percent of the total fill thickness. This should be considered when designing pavements and other structures over utility lines and/or other areas with deep fill. If this potential for settlement is not acceptable, it may be necessary to backfill areas below 10 ft using flexible base material or low strength flowable fill. We should be contacted for further evaluation and recommendations.

If utility trenches or other excavations extend to or beyond a depth of 5 ft below construction grade, the contractor or others shall be required to develop an excavation safety plan to protect personnel entering the excavation or excavation vicinity. The collection of specific geotechnical data and the development of such a plan, which could include designs for sloping and benching or various types of temporary shoring, is beyond the scope of this study. Any such designs and safety plans shall be developed in accordance with current OSHA guidelines and other applicable industry standards.

7.5 Wet Weather Conditions

Due to the nature of the surficial soils, construction operations may encounter difficulties due to wet or soft surface soils becoming a general hindrance to equipment, especially following periods of wet weather. If the subgrade cannot be adequately compacted to the minimum densities as described previously, one of the following measures will be required: 1) removal and replacement with select fill, 2) chemical treatment of the soil to dry and improve the condition of the subgrade, or 3) drying by natural means if the schedule allows. Based on our experience with similar soils in this area, chemical treatment is generally the most efficient and effective method to increase the supporting value of wet and weak subgrade. ALPHA TESTING should be contacted for additional recommendations if chemical treatment is needed due to soft and wet subgrade.

7.6 Groundwater

Free water was encountered in Borings B-1 and B-2 at depths of about 38 to 45 ft below the existing ground surface during drilling operations. Free water was not encountered in the remaining borings. From our experience with similar soils, groundwater seepage could be encountered at shallower depths in excavations for foundations, utility conduits, and other general excavations. The risk of seepage increases with depth of excavation and during or after periods of precipitation. Standard sump pits and pumping may be adequate to control seepage on a local basis for relatively shallow excavations.

8.0 LIMITATIONS

Professional services provided in this geotechnical exploration were performed, findings obtained, and recommendations prepared in accordance with generally accepted geotechnical engineering principles and practices. The scope of services provided herein does not include an environmental assessment of the site or investigation for the presence or absence of hazardous materials in the soil, surface water or groundwater. ALPHA, upon written request, can be retained to provide these services.

ALPHA is not responsible for conclusions, opinions or recommendations made by others based on this data. Information contained in this report is intended for the exclusive use of the Client (and their designated design representatives), and is related solely to design of the specific structures outlined in Section 2.0. No party other than the Client (and their designated design representatives) shall use or rely upon this report in any manner whatsoever unless such party shall have obtained ALPHA's written acceptance of such intended use. Any such third party using this report after obtaining ALPHA's written acceptance shall be bound by the limitations and limitations of liability contained herein, including ALPHA's liability being limited to the fee paid to it for this report. Recommendations presented in this report should not be used for design of any other structures except those specifically described in this report. In all areas of this report in which ALPHA may provide additional services if requested to do so in writing, it is presumed that such requests have not been made if not evidenced by a written document accepted by ALPHA. Further, subsurface conditions can change with passage of time. Recommendations contained herein are not considered applicable for an extended period of time after the completion date of this report. It is recommended our office be contacted for a review of the contents of this report for construction commencing more than one (1) year after completion of this report. Non-compliance with any of these requirements by the Client or anyone else shall release ALPHA from any liability resulting from the use of, or reliance upon, this report.

Recommendations provided in this report are based on our understanding of information provided by the Client about characteristics of the project. If the Client notes any deviation from the facts about project characteristics, our office should be contacted immediately since this may materially alter the recommendations. Further, ALPHA is not responsible for damages resulting from workmanship of designers or contractors. It is recommended the Owner retain qualified personnel, such as a Geotechnical Engineering firm, to verify construction is performed in accordance with plans and specifications.

APPENDIX

ALPHA TESTING

A Universal Engineering Sciences Company

Vicinity Map

CLIENT Fort Bend County Facilities Management & Planning

PROJECT NAME Fort Bend County IT Building

PROJECT NUMBER H232608

PROJECT LOCATION Richmond, Texas

Key Map used with permission

FIGURE A-1

BORING LOCATION PLAN

ALPHA TESTING
A Universal Engineering Sciences Company

CLIENT Fort Bend County Facilities Management & Planning
PROJECT NAME Fort Bend County IT Building
PROJECT NUMBER H232608
PROJECT LOCATION Richmond, Texas

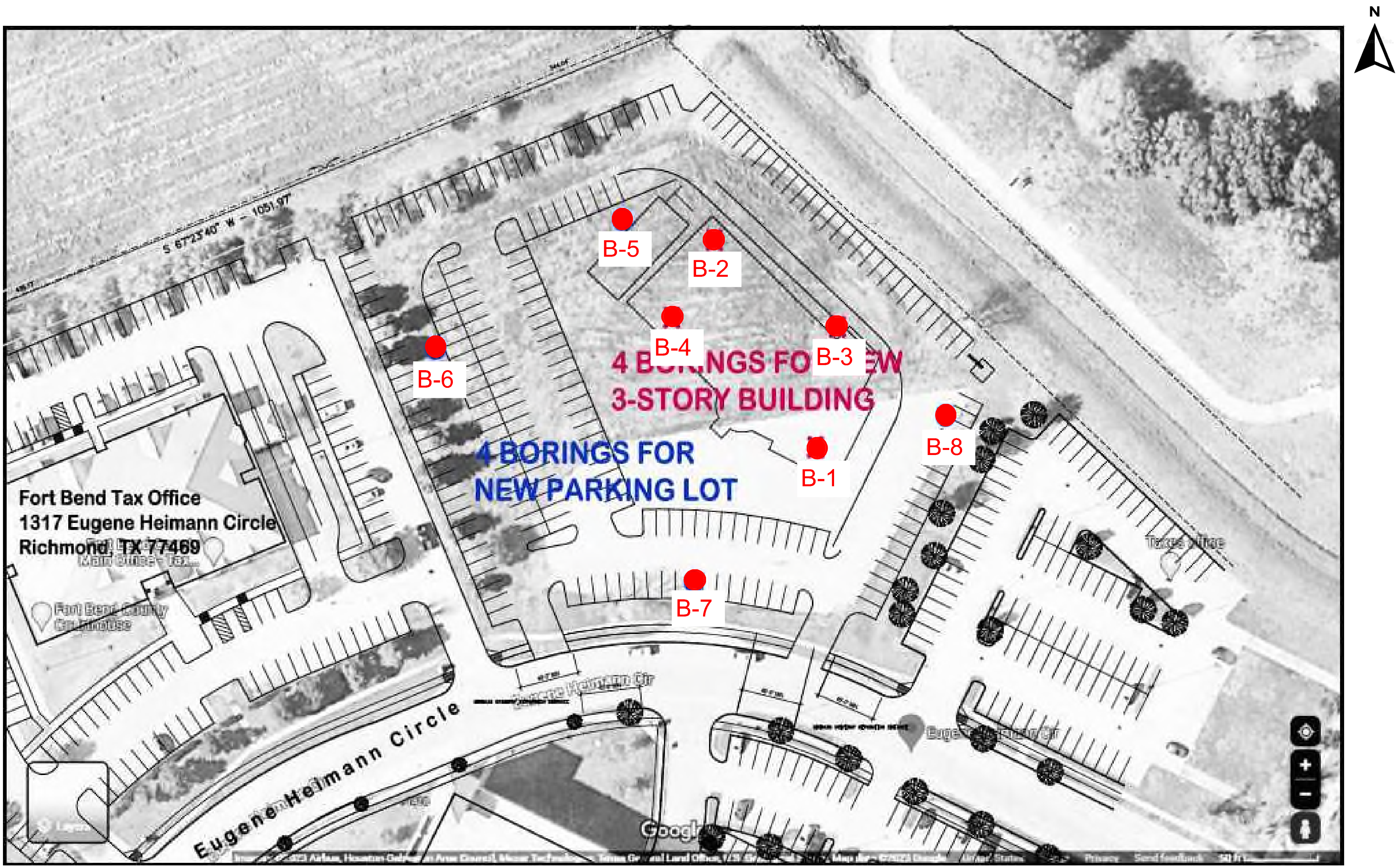

FIGURE A-2

A-3 METHODS OF FIELD EXPLORATION

Using standard rotary drilling equipment, a total of eight (8) test borings were performed for this geotechnical exploration at the approximate locations shown on the Boring Location Plan, Figure A-2. The boring locations were staked by using a handheld GPS device as shown on the site plan provided during this study. The locations of the test borings shown on the Boring Location Plan are considered accurate only to the degree implied by the method used to define them.

Relatively undisturbed samples of the cohesive subsurface materials were obtained by hydraulically pressing 3-inch O.D. thin-wall sampling tubes into the underlying soils at selected depths (ASTM D 1587). These samples were removed from the sampling tubes in the field and examined visually. One representative portion of each sample was sealed in a plastic bag for use in future visual examinations and possible testing in the laboratory.

In addition, representative samples of the subsurface materials were obtained employing split-spoon sampling procedures in general accordance with ASTM Standard D 1586. Disturbed samples were obtained at selected depths in the borings by driving a standard 2-inch outside diameter split-spoon sampler 18 inches into the subsurface material using a 140-pound hammer falling 30 inches. The number of blows required to drive the split-spoon sampler the final 12 inches of penetration (N-value) is recorded in the appropriate column on the boring logs presented in Appendix A of this report.

Logs of all borings are included in the Appendix of this report. The logs show visual descriptions of subsurface strata encountered using the Unified Soil Classification System. Sampling information, pertinent field data, and field observations are also included. Samples not consumed by testing will be retained in our laboratory for at least 14 days and then discarded unless the Client requests otherwise.

A-4 METHODS OF LABORATORY TESTING

Selected samples were examined and classified by a qualified member of the Geotechnical Division and the boring logs were edited as necessary. To aid in classifying the subsurface materials and to determine the general engineering characteristics, natural moisture content tests (ASTM D 2216), Atterberg-limit tests (ASTM D 4318-Method B), and gradation tests (percent of material passing a No. 200 sieve, ASTM D 1140) and dry unit weight tests (ASTM D 2166) were performed on select samples. A calibrated pocket penetrometer was used to approximate the unconfined compressive strength as an indicator of soil consistency for all intact cohesive samples. Unconfined compression strength tests (ASTM D 2166) were also performed on representative samples. Results of all laboratory tests described above are provided on the accompanying Log of Boring sheets.

In addition to the Atterberg-limit tests, the expansive properties of the clay soils were further analyzed by absorption swell tests (ASTM D 4546). The swell test is performed by placing a selected sample in a consolidation machine and applying either the approximate current or expected overburden pressure and then allowing the sample to absorb water. When the sample exhibits very little tendency for further expansion, the height increase is recorded and the percent free swell and total moisture gain calculated. Results of the absorption swell tests are provided on the Log of Boring sheets included in this appendix.

ALPHA TESTING
WHERE IT ALL BEGINS

15811 Tuckerton Rd
Houston, Texas 77095
Phone: 713-360-0460
Fax: 713-360-0481
www.alphatesting.com

BORING NO.: 1
Sheet 1 of 1

PROJECT NO.: H232608

Client: Fort Bend County Facilities Management & Planning
Project: Fort Bend County IT Building
Start Date: 10/9/2023 **End Date:** 10/9/2023
Drilling Method: CONTINUOUS FLIGHT AUGER

Location: Richmond , Texas
Surface Elevation:
West:
North:
Hammer Drop (lbs / in): 140 / 30

GROUND WATER OBSERVATIONS
On Rods (ft): 45
After Drilling (ft): 41
After ____ Hours (ft):

Depth, feet	MATERIAL DESCRIPTION	Stratum Bottom (ft)	Sample Type	Recovery % RQD	TX Cone or Std. Pen. (blows/ft, in)	Pocket Penetrometer (tsf)	Unconfined Comp. Strength (tsf)	% Passing No. 200 Sieve	Unit Dry Weight (pcf)	Water Content, %	Liquid Limit	Plastic Limit	Plasticity Index	Swell, %
	ASPHALT (3" Thick)	0.3												
	BASE (3" Thick)	0.5												
	Dark brown LEAN CLAY					4.5+		77		14	33	17	16	
		4.0				4.5+				18				
5	Dark brown, dark gray FAT CLAY					4.0				20				
	- dark brown, reddish brown from 6' to 8'					4.0				20				
10	- reddish brown with organic matter from 8' to 13'	13.0				4.5+				21	61	20	41	0.0
15	Light brown SANDY LEAN CLAY	18.0				3.5	1.5		104	20				
20	Reddish brown FAT CLAY with calcareous nodules					4.5+				27				
25	-with sand seams from 23' to 28'					4.5+	2.5		109	20				
30	- dark gray from 28' to 38'					4.5+				21				
35		38.0				4.5+				21				
40	Light gray, brownish yellow LEAN CLAY with sand seams					3.0	1.8		103	22	30	19	11	
45	- brown from 43' to 48'					3.5	1.8		107	21				
50	- reddish brown, light gray with calcareous nodules from 48' to 50'	50.0				2.5	1.0	90	101	26				
55	BORING TERMINATED AT 50 FT													

ALPHA TESTING
WHERE IT ALL BEGINS

15811 Tuckerton Rd
Houston, Texas 77095
Phone: 713-360-0460
Fax: 713-360-0481
www.alphatesting.com

BORING NO.: 2

PROJECT NO.: H232608

Client: Fort Bend County Facilities Management & Planning
Project: Fort Bend County IT Building
Start Date: 10/9/2023 **End Date:** 10/9/2023
Drilling Method: CONTINUOUS FLIGHT AUGER

Location: Richmond , Texas
Surface Elevation:
West:
North:
Hammer Drop (lbs / in): 140 / 30

GROUND WATER OBSERVATIONS
- ▽ On Rods (ft): 42
- ▼ After Drilling (ft): 38
- ▼ After ____ Hours (ft):

MATERIAL DESCRIPTION

Material Description	Stratum Bottom Depth (ft)
Dark brown, dark gray LEAN CLAY with sand seams - with root fibers from 0' to 2' - dark brown from 2' to 4' - dark brown, reddish brown from 4'to 6' - reddish brown from 6' to 18'	18.0
Dark gray, reddish brown FAT CLAY - dark gray from 28' to 33' - reddish brown 33' to 38'	38.0
Light gray, browmish yellow LEAN CLAY with sand seams - with ferrous nodules from 38' to 43' - reddish brown with calcareous nodules from 48' to 50'	50.0
BORING TERMINATED AT 50 FT	

Sample Type	Recovery % RQD	TX Cone or Std. Pen. (blows/ft, in)	Pocket Penetrometer (tsf)	Unconfined Comp. Strength (tsf)	% Passing No. 200 Sieve	Unit Dry Weight (pcf)	Water Content, %	Liquid Limit	Plastic Limit	Plasticity Index	Swell, %
			4.5+				13				
			4.5+				11				
			4.5+		82		13	37	15	22	
			4.5+				13				
			4.5+				17				
			4.5+	1.1		103	21				
			4.5+	2.2		99	22				
			3.5				22				
			4.0	2.6		104	20				
			4.5				27				
			4.5	2.1		103	22				
			2.0	1.0		107	22				
			3.0	1.1		104	25				

ALPHA TESTING
WHERE IT ALL BEGINS

15811 Tuckerton Rd
Houston, Texas 77095
Phone: 713-360-0460
Fax: 713-360-0481
www.alphatesting.com

BORING NO.: 3
Sheet 1 of 1

PROJECT NO.: H232608

Client: Fort Bend County Facilities Management & Planning
Project: Fort Bend County IT Building
Start Date: 10/9/2023 **End Date:** 10/9/2023
Drilling Method: CONTINUOUS FLIGHT AUGER

Location: Richmond , Texas
Surface Elevation:
West:
North:
Hammer Drop (lbs / in): 140 / 30

GROUND WATER OBSERVATIONS
On Rods (ft): NONE
After Drilling (ft): DRY
After ____ Hours (ft):

Depth, feet	Graphic Log	MATERIAL DESCRIPTION	Sample Type	Recovery % RQD	TX Cone or Std. Pen. (blows/ft, in)	Pocket Penetrometer (tsf)	Unconfined Comp. Strength (tsf)	% Passing No. 200 Sieve	Unit Dry Weight (pcf)	Water Content, %	Liquid Limit	Plastic Limit	Plasticity Index	Swell, %
		Brown LEAN CLAY with sand seams				4.5+		83		13	42	17	25	
		- with root fibers from 0' to 2'												
		- dark brown from 2' to 4'				4.5+				14				
5		- dark gray from 4' to 6'				4.5				9				
		- reddish brown from 6' to 13'				4.5		91		11	34	17	17	0.0
10						4.5				17				
		13.0												
15		Reddish brown SANDY LEAN CLAY				2.0	1.1		113	14				
		18.0												
20		Reddish brown CLAYEY SAND			20					9				
		23.0												
25		Dark gray FAT CLAY				3.0				27				
		25.0												
		BORING TERMINATED AT 25 FT												
30														
35														
40														
45														
50														
55														

ALPHA TESTING
WHERE IT ALL BEGINS

15811 Tuckerton Rd
Houston, Texas 77095
Phone: 713-360-0460
Fax: 713-360-0481
www.alphatesting.com

BORING NO.: 4
Sheet 1 of 1

PROJECT NO.: H232608

Client: Fort Bend County Facilities Management & Planning
Project: Fort Bend County IT Building
Start Date: 10/9/2023 **End Date:** 10/9/2023
Drilling Method: CONTINUOUS FLIGHT AUGER

Location: Richmond , Texas
Surface Elevation:
West:
North:
Hammer Drop (lbs / in): 140 / 30

GROUND WATER OBSERVATIONS
On Rods (ft): NONE
After Drilling (ft): DRY
After ____ Hours (ft): ____

Depth, feet	Graphic Log	MATERIAL DESCRIPTION	Sample Type	Recovery % RQD	TX Cone or Std. Pen. (blows/ft, in)	Pocket Penetrometer (tsf)	Unconfined Comp. Strength (tsf)	% Passing No. 200 Sieve	Unit Dry Weight (pcf)	Water Content, %	Liquid Limit	Plastic Limit	Plasticity Index	Swell, %
0–2.0		Dark gray LEAN CLAY with sand seams (2.0)				4.5				12				
2.0–4.0		Reddish brown SILTY SAND (4.0)				4.5	2.4	47	110	5	NP	NP	NP	
4.0–18.0		Reddish brown LEAN CLAY with silt and sand seams				4.5				9				
					18	4.5				10				
						4.5				19				
		(18.0)				2.5	1.9		116	16				
18.0–23.0		Reddish brown CLAYEY SAND (23.0)			22					9				
23.0–25.0		Dark brown FAT CLAY with gravel (25.0)				3.0				19				
		BORING TERMINATED AT 25 FT												

Depth scale: 5, 10, 15, 20, 25, 30, 35, 40, 45, 50, 55

ALPHA TESTING
WHERE IT ALL BEGINS

15811 Tuckerton Rd
Houston, Texas 77095
Phone: 713-360-0460
Fax: 713-360-0481
www.alphatesting.com

BORING NO.: 5
Sheet 1 of 1

PROJECT NO.: H232608

Client: Fort Bend County Facilities Management & Planning
Project: Fort Bend County IT Building
Start Date: 10/9/2023 **End Date:** 10/9/2023
Drilling Method: CONTINUOUS FLIGHT AUGER

Location: Richmond , Texas
Surface Elevation:
West:
North:
Hammer Drop (lbs / in): 140 / 30

GROUND WATER OBSERVATIONS
▽ On Rods (ft): NONE
▼ After Drilling (ft): DRY
▽ After ____ Hours (ft):

Depth, feet	Graphic Log	MATERIAL DESCRIPTION	Sample Type	Recovery % RQD	TX Cone or Std. Pen. (blows/ft, in)	Pocket Penetrometer (tsf)	Unconfined Comp. Strength (tsf)	% Passing No. 200 Sieve	Unit Dry Weight (pcf)	Water Content, %	Liquid Limit	Plastic Limit	Plasticity Index	Swell, %
0–5		Dark brown LEAN CLAY with sand seams - reddish brown from 1' to 5'				4.0		75		15	39	15	24	
						4.5				13				
		5.0				4.5				6				
5		BORING TERMINATED AT 5 FT												

Depth scale: 5, 10, 15, 20, 25, 30, 35, 40, 45, 50, 55

ALPHA TESTING
WHERE IT ALL BEGINS

15811 Tuckerton Rd
Houston, Texas 77095
Phone: 713-360-0460
Fax: 713-360-0481
www.alphatesting.com

BORING NO.: 6
Sheet 1 of 1

PROJECT NO.: H232608

Client: Fort Bend County Facilities Management & Planning
Project: Fort Bend County IT Building
Start Date: 10/9/2023 **End Date:** 10/9/2023
Drilling Method: CONTINUOUS FLIGHT AUGER

Location: Richmond , Texas
Surface Elevation:
West:
North:
Hammer Drop (lbs / in): 140 / 30

GROUND WATER OBSERVATIONS
On Rods (ft): NONE
After Drilling (ft): DRY
After ____ Hours (ft):

Depth, feet	Graphic Log	MATERIAL DESCRIPTION	Sample Type	Recovery % RQD	TX Cone or Std. Pen. (blows/ft, in)	Pocket Penetrometer (tsf)	Unconfined Comp. Strength (tsf)	% Passing No. 200 Sieve	Unit Dry Weight (pcf)	Water Content, %	Liquid Limit	Plastic Limit	Plasticity Index	Swell, %
		Reddish brown LEAN CLAY with sand seams				3.0				17				
		- with root fibers from 0' to 1'												
		- dark brown from 1' to 3'				4.5		73		14				
		- reddish brown from 3' to 5'				4.5+				10				
5		5.0												
		BORING TERMINATED AT 5 FT												
10														
15														
20														
25														
30														
35														
40														
45														
50														
55														

ALPHA TESTING
WHERE IT ALL BEGINS

15811 Tuckerton Rd
Houston, Texas 77095
Phone: 713-360-0460
Fax: 713-360-0481
www.alphatesting.com

BORING NO.: 7
Sheet 1 of 1

PROJECT NO.: H232608

Client: Fort Bend County Facilities Management & Planning
Project: Fort Bend County IT Building
Start Date: 10/9/2023 **End Date:** 10/9/2023
Drilling Method: CONTINUOUS FLIGHT AUGER

Location: Richmond , Texas
Surface Elevation:
West:
North:
Hammer Drop (lbs / in): 140 / 30

GROUND WATER OBSERVATIONS
On Rods (ft): NONE
After Drilling (ft): DRY
After ____ Hours (ft):

Depth, feet	Graphic Log	MATERIAL DESCRIPTION	Sample Type	Recovery % RQD	TX Cone or Std. Pen. (blows/ft, in)	Pocket Penetrometer (tsf)	Unconfined Comp. Strength (tsf)	% Passing No. 200 Sieve	Unit Dry Weight (pcf)	Water Content, %	Liquid Limit	Plastic Limit	Plasticity Index	Swell, %
0.2		ASPHALT (2" thick)				4.5				15				
		Dark brown LEAN CLAY with sand seams - reddish brown from 1' to 5'				4.5				14				
5.0						4.0		77		15				
		BORING TERMINATED AT 5 FT												

Depth scale: 5, 10, 15, 20, 25, 30, 35, 40, 45, 50, 55

ALPHA TESTING
WHERE IT ALL BEGINS

15811 Tuckerton Rd
Houston, Texas 77095
Phone: 713-360-0460
Fax: 713-360-0481
www.alphatesting.com

BORING NO.: 8
Sheet 1 of 1

PROJECT NO.: H232608

Client: Fort Bend County Facilities Management & Planning
Project: Fort Bend County IT Building
Start Date: 10/9/2023 **End Date:** 10/9/2023
Drilling Method: CONTINUOUS FLIGHT AUGER

Location: Richmond , Texas
Surface Elevation:
West:
North:
Hammer Drop (lbs / in): 140 / 30

GROUND WATER OBSERVATIONS
▽ On Rods (ft): NONE
▼ After Drilling (ft): DRY
▽ After ____ Hours (ft): ______

Depth, feet	Graphic Log	MATERIAL DESCRIPTION	Sample Type	Recovery % RQD	TX Cone or Std. Pen. (blows/ft, in)	Pocket Penetrometer (tsf)	Unconfined Comp. Strength (tsf)	% Passing No. 200 Sieve	Unit Dry Weight (pcf)	Water Content, %	Liquid Limit	Plastic Limit	Plasticity Index	Swell, %
		ASPHALT (2" thick) 0.2				3.5				17	35	15	20	
		Dark brown LEAN CLAY with sand seams - dark gray from 1' to 3'				3.0				17				
5		- reddish brown from 3' to 5' 5.0				3.5				16				
		BORING TERMINATED AT 5 FT												

Depth scale: 5, 10, 15, 20, 25, 30, 35, 40, 45, 50, 55

ALPHA TESTING

A Universal Engineering Sciences Company

KEY TO SOIL SYMBOLS AND CLASSIFICATIONS

SOIL & ROCK SYMBOLS

- (CH), High Plasticity CLAY
- (CL), Low Plasticity CLAY
- (SC), CLAYEY SAND
- (SP), Poorly Graded SAND
- (SW), Well Graded SAND
- (SM), SILTY SAND
- (ML), SILT
- (MH), Elastic SILT
- LIMESTONE
- SHALE / MARL
- SANDSTONE
- (GP), Poorly Graded GRAVEL
- (GW), Well Graded GRAVEL
- (GC), CLAYEY GRAVEL
- (GM), SILTY GRAVEL
- (OL), ORGANIC SILT
- (OH), ORGANIC CLAY
- FILL

SAMPLING SYMBOLS

- SHELBY TUBE (3" OD except where noted otherwise)
- SPLIT SPOON (2" OD except where noted otherwise)
- AUGER SAMPLE
- TEXAS CONE PENETRATION
- ROCK CORE (2" ID except where noted otherwise)

RELATIVE DENSITY OF COHESIONLESS SOILS (blows/ft)

VERY LOOSE	0 TO 4
LOOSE	5 TO 10
MEDIUM	11 TO 30
DENSE	31 TO 50
VERY DENSE	OVER 50

COMPRESSIVE STRENGTH OF COHESIVE SOILS (tsf)

VERY SOFT	LESS THAN 0.25
SOFT	0.25 TO 0.50
FIRM	0.50 TO 1.00
STIFF	1.00 TO 2.00
VERY STIFF	2.00 TO 4.00
HARD	OVER 4.00

RELATIVE DEGREE OF PLASTICITY (PI)

LOW	4 TO 15
MEDIUM	16 TO 25
HIGH	26 TO 35
VERY HIGH	OVER 35

RELATIVE PROPORTIONS (%)

TRACE	1 TO 10
LITTLE	11 TO 20
SOME	21 TO 35
AND	36 TO 50

PARTICLE SIZE IDENTIFICATION (DIAMETER)

BOULDERS	8.0" OR LARGER
COBBLES	3.0" TO 8.0"
COARSE GRAVEL	0.75" TO 3.0"
FINE GRAVEL	5.0 mm TO 3.0"
COURSE SAND	2.0 mm TO 5.0 mm
MEDIUM SAND	0.4 mm TO 5.0 mm
FINE SAND	0.07 mm TO 0.4 mm
SILT	0.002 mm TO 0.07 mm
CLAY	LESS THAN 0.002 mm

SECTION 01 10 00
SUMMARY

PART 1 - GENERAL

1.01 SUMMARY

A. Section includes:

1. Project information.
2. Work covered by Contract Documents.
3. Access to site.
4. Coordination with occupants.
5. Work restrictions.
6. Specification and Drawing conventions.

B. Related Sections include Division 01 Section “Temporary Facilities and Controls” for limitations and procedures governing temporary use of Owner's facilities.

1.02 PROJECT INFORMATION

A. Project Identification: Information Technology Building.

1. Project Location: 1419 Eugene Heimann Circle, Richmond, Texas 77469.

B. Owner: Fort Bend County, 301 Jackson St., Richmond, Texas 77469.

1. Owner's Representative: James Knight, Facilities Director

C. Architect: FS Group Architects, 16575 Village Drive, Houston Texas 77040.

1. Contact: Harry Knapp, AIA, NCARB.

a. Telephone: (713) 344-1752 x1012
b. Email: harry@fsdesignbuild.com.

1.03 WORK COVERED BY CONTRACT DOCUMENTS

A. The Work of Project is defined by the Contract Documents and consists of the construction of a new three-story, commercial office technology building with 42,173 square feet of floor area and other Work indicated in the Contract Documents.

B. Type of Contract: Project will be constructed under a single prime contract.

1.04 WORK BY OWNER

A. General: Cooperate fully with Owner so work may be carried out smoothly, without interfering with or delaying work under this Contract or work by Owner. Coordinate the Work of this Contract with work performed by Owner.

1.05 WORK UNDER SEPARATE CONTRACTS

A. General: Cooperate fully with separate contractors so work on those contracts may be carried out smoothly, without interfering with or delaying Work under this Contract or other contracts. Coordinate the Work of this Contract with work performed under separate contracts.

B. Owner has awarded or will award separate contract(s) for the following construction operations at Project site.

1. ____.

1.06 ACCESS TO SITE

A. General: Contractor shall have full use of Project site for construction operations during construction period. Contractor's use of Project site is limited only by Owner's right to perform work or to retain other contractors on portions of Project.

B. Use of Site: Limit use of Project site to areas within the Contract limits indicated. Do not disturb portions of Project site beyond areas in which the Work is indicated.

1.07 COORDINATION WITH OCCUPANTS

A. Owner Limited Occupancy of Completed Areas of Construction: Owner reserves the right to occupy and to place and install equipment in completed portions of the Work, prior to Substantial Completion of the Work, provided such occupancy does not interfere with completion of the Work. Such placement of equipment and limited occupancy shall not constitute acceptance of the total Work.

1. Architect will prepare a Certificate of Substantial Completion for each specific portion of the Work to be occupied prior to Owner acceptance of the completed Work.
2. Obtain a Certificate of Occupancy from authorities having jurisdiction before limited Owner occupancy.
3. Before limited Owner occupancy, mechanical and electrical systems shall be fully operational, and required tests and inspections shall be successfully completed. On occupancy, Owner will operate and maintain mechanical and electrical systems serving occupied portions of Work.
4. On occupancy, Owner will assume responsibility for maintenance and custodial service for occupied portions of Work.

1.08 WORK RESTRICTIONS

A. Work Restrictions, General: Comply with restrictions on construction operations.

1. Comply with limitations on use of public streets and with other requirements of authorities having jurisdiction.

B. On-Site Work Hours: Limit work in the building to normal business working hours, Monday through Friday, unless otherwise indicated.

C. Existing Utility Interruptions: Do not interrupt utilities serving facilities occupied by others unless permitted under the following conditions and then only after providing temporary utility services according to requirements indicated:

1. Notify Owner not less than two days in advance of proposed utility interruptions.

2. Obtain Owner's written permission before proceeding with utility interruptions.

D. Noise, Vibration, and Odors: Coordinate operations that may result in high levels of noise and vibration, odors, or other disruption to Owner occupancy with Owner.

1. Notify Owner not less than two days in advance of proposed disruptive operations.
2. Obtain Owner's written permission before proceeding with disruptive operations.

E. Restricted Substances: Use of tobacco products and other controlled substances on Project site is not permitted.

F. Employee Identification: Provide identification tags for Contractor personnel working on Project site. Require personnel to use identification tags at all times.

G. Employee Screening: Comply with Owner's requirements for drug and background screening of Contractor personnel working on Project site.

1. Maintain list of approved screened personnel with Owner's representative.

1.09 SPECIFICATION AND DRAWING CONVENTIONS

A. Specification Content: The Specifications use certain conventions for the style of language and the intended meaning of certain terms, words, and phrases when used in particular situations. These conventions are as follows:

1. Imperative mood and streamlined language are generally used in the Specifications. The words “shall,” “shall be,” or “shall comply with,” depending on the context, are implied where a colon (:) is used within a sentence or phrase.
2. Specification requirements are to be performed by Contractor unless specifically stated otherwise.

B. Division 01 General Requirements: Requirements of Sections in Division 01 apply to the Work of all Sections in the Specifications.

C. Drawing Coordination: Requirements for materials and products identified on Drawings are described in detail in the Specifications. One or more of the following are used on Drawings to identify materials and products:

1. Terminology: Materials and products are identified by the typical generic terms used in the individual Specifications Sections.
2. Abbreviations: Materials and products are identified by abbreviations scheduled on Drawings and published as part of the U.S. National CAD Standard.
3. Keynoting: Materials and products are identified by reference keynotes referencing Specification Section numbers found in this Project Manual.

PART 2 - PRODUCTS (NOT APPLICABLE)

PART 3 - EXECUTION (NOT APPLICABLE)

END OF SECTION

SECTION 01 21 00
ALLOWANCES

SECTION 01 21 00
ALLOWANCES

PART 1 - GENERAL

1.01 SUMMARY

A. Section includes administrative and procedural requirements governing allowances.

1. Allowances have been established in lieu of additional requirements and to defer selection of actual materials and equipment to a later date when direction will be provided to Contractor. If necessary, additional requirements will be issued by Change Order.

B. Types of allowances include:

1. Lump sum allowances.
2. Contingency allowances.

1.02 SELECTION AND PURCHASE

A. At the earliest practical date after award of the Contract, advise Architect of the date when final selection and purchase of each product or system described by an allowance must be completed to avoid delaying the Work.

B. At Architect's request, obtain proposals for each allowance for use in making final selections. Include recommendations that are relevant to performing the Work.

C. Purchase products and systems selected by Architect from the designated supplier.

1.03 ACTION SUBMITTALS

A. Submit proposals for purchase of products or systems included in allowances, in the form specified for Change Orders.

1.04 INFORMATIONAL SUBMITTALS

A. Submit invoices or delivery slips to show actual quantities of materials delivered to the site for use in fulfillment of each allowance.

B. Submit time sheets and other documentation to show labor time and cost for installation of allowance items that include installation as part of the allowance.

C. Coordinate and process submittals for allowance items in same manner as for other portions of the Work.

1.05 COORDINATION

A. Coordinate allowance items with other portions of the Work. Furnish templates as required to coordinate installation.

1.06 LUMP SUM ALLOWANCES

A. Allowance shall include cost to Contractor of specific products and materials ordered by Owner or selected by Architect under allowance and shall include taxes, freight, and delivery to Project site.

B. Unless otherwise indicated, Contractor's costs for receiving and handling at Project site, labor, installation, overhead and profit, and similar costs related to products and materials ordered by Owner or selected by Architect under allowance shall be included as part of the Contract Sum and not part of the allowance.

C. Unused Materials: Return unused materials purchased under an allowance to manufacturer or supplier for credit to Owner, after installation has been completed and accepted.

1. If requested by Architect, retain and prepare unused material for storage by Owner. Deliver unused material to Owner's storage space as directed.

1.07 CONTINGENCY ALLOWANCES

A. Use the contingency allowance only as directed by Architect for Owner's purposes and only by Change Orders that indicate amounts to be charged to the allowance.

B. Contractor's overhead, profit, and related costs for products and equipment ordered by Owner under the contingency allowance are included in the allowance and are not part of the Contract Sum. These costs include delivery, installation, insurance, equipment rental, and similar costs.

C. Change Orders authorizing use of funds from the contingency allowance will include Contractor's related costs and reasonable overhead and profit margins.

D. At Project closeout, credit unused amounts remaining in the contingency allowance to Owner by Change Order.

PART 2 - PRODUCTS (NOT USED)

PART 3 - EXECUTION

3.01 EXAMINATION

A. Examine products covered by an allowance promptly on delivery for damage or defects. Return damaged or defective products to manufacturer for replacement.

3.02 PREPARATION

A. Coordinate materials and their installation for each allowance with related materials and installations to ensure that each allowance item is completely integrated and interfaced with related work.

3.03 SCHEDULE OF ALLOWANCES

A. Allowance No. 1: Panel Signage Allowance – for interior panel (room identification) signage, lump sum $20,000.00.

END OF SECTION

SECTION 01 23 00
ALTERNATES

SECTION **01 23 00**
ALTERNATES

PART 1 - GENERAL

1.01 SUMMARY

A. Section includes administrative and procedural requirements for alternates.

1.02 DEFINITIONS

A. Alternate: An amount proposed by bidders and stated on the Bid Form for certain work defined in the bidding requirements that may be added to or deducted from the base bid amount if the Owner decides to accept a corresponding change either in the amount of construction to be completed or in the products, materials, equipment, systems, or installation methods described in the Contract Documents.

1. Alternates described in this Section are part of the Work only if enumerated in the Agreement.
2. The cost or credit for each alternate is the net addition to or deduction from the Contract Sum to incorporate alternates into the Work. No other adjustments are made to the Contract Sum.

1.03 PROCEDURES

A. Coordination: Revise or adjust affected adjacent work as necessary to completely integrate work of the alternate into Project.

1. Include as part of each alternate, miscellaneous devices, accessory objects, and similar items incidental to or required for a complete installation whether or not indicated as part of alternate.

B. Execute accepted alternates under the same conditions as other work of the Contract.

C. Schedule: A schedule of alternates is included at the end of this Section. Specification Sections referenced in schedule contain requirements for materials necessary to achieve the work described under each alternate.

PART 2 - PRODUCTS (NOT APPLICABLE)

PART 3 - EXECUTION

3.01 SCHEDULE OF ALTERNATES

A. Alternate No. 1: Glass doors and frames in lieu of wood door and aluminum frames.

1. Base Bid: No change.
2. Alternate Bid: Integrated glass door and aluminum frame system I lieu of wood door and aluminum (Raco style) frames at interior window types as identified on Sheet A620.

END OF SECTION

SECTION 01 25 00
SUBSTITUTION PROCEDURES

PART 1 - GENERAL

1.01 SUMMARY

A. Section includes administrative and procedural requirements for substitutions.

B. Related Sections include Division 01 Section “Product Requirements” for requirements for submitting comparable product submittals for products by listed manufacturers.

1.02 DEFINITIONS

A. Substitutions: Changes in products, materials, equipment, and methods of construction from those required by the Contract Documents and proposed by Contractor.

1.03 SUBMITTALS

A. Substitution Requests: Submit three copies of each request for consideration. Identify product or fabrication or installation method to be replaced. Include Specification Section number and title and Drawing numbers and titles.

1. Substitution Request Form: Use form attached.
2. Documentation: Show compliance with requirements for substitutions and the following, as applicable:

   a. Statement indicating why specified product or fabrication or installation cannot be provided, if applicable.
   b. Coordination information, including a list of changes or modifications needed to other parts of the Work and to construction performed by Owner and separate contractors, that will be necessary to accommodate proposed substitution.
   c. Detailed comparison of significant qualities of proposed substitution with those of the Work specified. Include annotated copy of applicable specification section. Significant qualities may include attributes such as performance, weight, size, durability, visual effect, sustainable design characteristics, warranties, and specific features and requirements indicated. Indicate deviations, if any, from the Work specified.
   d. Product Data, including drawings and descriptions of products and fabrication and installation procedures.
   e. Samples, where applicable or requested.
   f. Certificates and qualification data, where applicable or requested.
   g. List of similar installations for completed projects with project names and addresses and names and addresses of architects and owners.
   h. Material test reports from a qualified testing agency indicating and interpreting test results for compliance with requirements indicated.

i. Research reports evidencing compliance with building code in effect for Project, from ICC-ES.
j. Detailed comparison of Contractor's construction schedule using proposed substitution with products specified for the Work, including effect on the overall Contract Time. If specified product or method of construction cannot be provided within the Contract Time, include letter from manufacturer, on manufacturer's letterhead, stating date of receipt of purchase order, lack of availability, or delays in delivery.
k. Cost information, including a proposal of change, if any, in the Contract Sum.
l. Contractor's certification that proposed substitution complies with requirements in the Contract Documents except as indicated in substitution request, is compatible with related materials, and is appropriate for applications indicated.
m. Contractor's waiver of rights to additional payment or time that may subsequently become necessary because of failure of proposed substitution to produce indicated results.

3. Architect's Action: If necessary, Architect will request additional information or documentation for evaluation within seven days of receipt of a request for substitution. Architect will notify Contractor of acceptance or rejection of proposed substitution within 15 days of receipt of request, or seven days of receipt of additional information or documentation, whichever is later.

a. Forms of Acceptance: Change Order, Construction Change Directive, or Architect's Supplemental Instructions for minor changes in the Work.
b. Use product specified if Architect does not issue a decision on use of a proposed substitution within time allocated.

1.04 QUALITY ASSURANCE

A. Compatibility of Substitutions: Investigate and document compatibility of proposed substitution with related products and materials. Engage qualified testing agency to perform compatibility tests recommended by manufacturers.

PART 2 - PRODUCTS

2.01 SUBSTITUTIONS

A. Substitutions for Cause: Submit requests for substitution immediately upon discovery of need for change, but not later than 15 days prior to time required for preparation and review of related submittals.

1. Conditions: Architect will consider Contractor's request for substitution when the following conditions are satisfied:

a. Requested substitution is consistent with the Contract Documents and will produce indicated results.
b. Requested substitution will not adversely affect Contractor's construction schedule.

c. Requested substitution has received necessary approvals of authorities having jurisdiction.
d. Requested substitution is compatible with other portions of the Work.
e. Requested substitution has been coordinated with other portions of the Work.
f. Requested substitution provides specified warranty.
g. If requested substitution involves more than one contractor, requested substitution has been coordinated with other portions of the Work, is uniform and consistent, is compatible with other products, and is acceptable to all contractors involved.

B. Substitutions for Convenience: Architect will consider requests for substitution if received within 60 days after the Notice to Proceed.

1. Conditions: Architect will consider Contractor's request for substitution when the following conditions are satisfied:

a. Requested substitution offers Owner a substantial advantage in cost, time, energy conservation, or other considerations, after deducting additional responsibilities Owner must assume. Owner's additional responsibilities may include compensation to Architect for redesign and evaluation services, increased cost of other construction by Owner, and similar considerations.
b. Requested substitution does not require extensive revisions to the Contract Documents.
c. Requested substitution is consistent with the Contract Documents and will produce indicated results.
d. Requested substitution will not adversely affect Contractor's construction schedule.
e. Requested substitution has received necessary approvals of authorities having jurisdiction.
f. Requested substitution is compatible with other portions of the Work.
g. Requested substitution has been coordinated with other portions of the Work.
h. Requested substitution provides specified warranty.
i. If requested substitution involves more than one contractor, requested substitution has been coordinated with other portions of the Work, is uniform and consistent, is compatible with other products, and is acceptable to all contractors involved.

PART 3 - EXECUTION (NOT APPLICABLE)

END OF SECTION

SECTION 01 26 00
CONTRACT MODIFICATION PROCEDURES

PART 1 - GENERAL

1.01 SUMMARY

A. Section includes administrative and procedural requirements for handling and processing Contract modifications.

1.02 MINOR CHANGES IN THE WORK

A. Architect will issue supplemental instructions authorizing minor changes in the Work, not involving adjustment to the Contract Sum or the Contract Time, on AIA Document G710, "Architect's Supplemental Instructions."

1.03 PROPOSAL REQUESTS

A. Owner-Initiated Proposal Requests: Architect will issue a detailed description of proposed changes in the Work that may require adjustment to the Contract Sum or the Contract Time. If necessary, the description will include supplemental or revised Drawings and Specifications.

1. Proposal Requests issued by Architect are not instructions either to stop work in progress or to execute the proposed change.
2. Within time specified in Proposal Request or 20 days, when not otherwise specified, after receipt of Proposal Request, submit a quotation estimating cost adjustments to the Contract Sum and the Contract Time necessary to execute the change.

a. Include a list of quantities of products required or eliminated and unit costs, with total amount of purchases and credits to be made. If requested, furnish survey data to substantiate quantities.
b. Indicate applicable taxes, delivery charges, equipment rental, and amounts of trade discounts.
c. Include costs of labor and supervision directly attributable to the change.
d. Include an updated Contractor's construction schedule that indicates the effect of the change, including, but not limited to, changes in activity duration, start and finish times, and activity relationship. Use available total float before requesting an extension of the Contract Time.
e. Quotation Form: Use forms acceptable to Architect.

B. Contractor-Initiated Proposals: If latent or changed conditions require modifications to the Contract, Contractor may initiate a claim by submitting a request for a change to Architect.

1. Include a statement outlining reasons for the change and the effect of the change on the Work. Provide a complete description of the proposed change. Indicate the effect of the proposed change on the Contract Sum and the Contract Time.

2. Include a list of quantities of products required or eliminated and unit costs, with total amount of purchases and credits to be made. If requested, furnish survey data to substantiate quantities.
3. Indicate applicable taxes, delivery charges, equipment rental, and amounts of trade discounts.
4. Include costs of labor and supervision directly attributable to the change.
5. Include an updated Contractor's construction schedule that indicates the effect of the change, including, but not limited to, changes in activity duration, start and finish times, and activity relationship. Use available total float before requesting an extension of the Contract Time.
6. Comply with requirements in Division 01 Section “Substitution Procedures” if the proposed change requires substitution of one product or system for product or system specified.
7. Proposal Request Form: Use form acceptable to Architect.

1.04 ADMINISTRATIVE CHANGE ORDERS

A. Allowance Adjustment: Refer to Division 01 Section “Allowances” for administrative procedures for preparation of Change Order Proposal for adjusting the Contract Sum to reflect actual costs of allowances.

1.05 CHANGE ORDER PROCEDURES

A. On Owner's approval of a Proposal Request, Architect will issue a Change Order for signatures of Owner and Contractor on AIA Document G701.

1.06 CONSTRUCTION CHANGE DIRECTIVE

A. Construction Change Directive: Architect may issue a Construction Change Directive on AIA Document G714. Construction Change Directive instructs Contractor to proceed with a change in the Work, for subsequent inclusion in a Change Order.

   1. Construction Change Directive contains a complete description of change in the Work. It also designates method to be followed to determine change in the Contract Sum or the Contract Time.

B. Documentation: Maintain detailed records on a time and material basis of work required by the Construction Change Directive.

   1. After completion of change, submit an itemized account and supporting data necessary to substantiate cost and time adjustments to the Contract.

PART 2 - PRODUCTS (NOT APPLICABLE)

PART 3 - EXECUTION (NOT APPLICABLE)

END OF SECTION

SECTION 01 29 00
PAYMENT PROCEDURES

1.01 SUMMARY

A. Section specifies administrative and procedural requirements necessary to prepare and process Applications for Payment.

1.02 SCHEDULE OF VALUES

A. Coordination: Coordinate preparation of the schedule of values with preparation of Contractor's construction schedule.

1. Correlate line items in the schedule of values with other required administrative forms and schedules, including the following:

    a. Application for Payment forms with continuation sheets.
    b. Submittal schedule.
    c. Items required to be indicated as separate activities in Contractor's construction schedule.

2. Submit the schedule of values to Architect at earliest possible date but no later than seven days before the date scheduled for submittal of initial Applications for Payment.
3. Subschedules for Phased Work: Where the Work is separated into phases requiring separately phased payments, provide subschedules showing values correlated with each phase of payment.

B. Format and Content: Use the Project Manual table of contents as a guide to establish line items for the schedule of values. Provide at least one line item for each Specification Section.

1. Identification: Include the following Project identification on the schedule of values:

    a. Project name and location.
    b. Name of Architect.
    c. Architect's project number.
    d. Contractor's name and address.
    e. Date of submittal.

2. Arrange schedule of values consistent with format of AIA Document G703.
3. Provide a breakdown of the Contract Sum in enough detail to facilitate continued evaluation of Applications for Payment and progress reports. Coordinate with the Project Manual table of contents. Provide multiple line items for principal subcontract amounts in excess of two percent of Contract Sum.

    a. Include separate line items under principal subcontracts for project closeout requirements in an amount totaling two percent of the Contract Sum and subcontract amount.

4. Round amounts to nearest whole dollar; total shall equal the Contract Sum.
5. Provide a separate line item in the schedule of values for each part of the Work where Applications for Payment may include materials or equipment purchased or fabricated and stored, but not yet installed.
6. Provide separate line items in the schedule of values for initial cost of materials, for each subsequent stage of completion, and for total installed value of that part of the Work.
7. Unless otherwise indicated in the Agreement, include line item for 10 percent retainage.
8. Each item in the schedule of values and Applications for Payment shall be complete. Include total cost and proportionate share of general overhead and profit for each item.

   a. Temporary facilities and other major cost items that are not direct cost of actual work-in-place may be shown either as separate line items in the schedule of values or distributed as general overhead expense, at Contractor's option.

9. Schedule Updating: Update and resubmit the schedule of values before the next Applications for Payment when Change Orders or Construction Change Directives result in a change in the Contract Sum.

1.03 APPLICATIONS FOR PAYMENT

A. Each Application for Payment shall be consistent with previous applications and payments as certified by Architect and paid for by Owner.

   1. Initial Application for Payment, Application for Payment at time of Substantial Completion, and final Application for Payment involve additional requirements.

B. Payment Application Times: The date for each progress payment is indicated in the Agreement between Owner and Contractor. The period of construction work covered by each Application for Payment is the period indicated in the Agreement.

C. Application for Payment Forms: Use AIA Document G702 and AIA Document G703 as form for Applications for Payment.

D. Application Preparation: Complete every entry on form. Notarize and execute by a person authorized to sign legal documents on behalf of Contractor. Architect will return incomplete applications without action.

   1. Entries shall match data on the schedule of values and Contractor's construction schedule. Use updated schedules if revisions were made.
   2. Include amounts of Change Orders and Construction Change Directives issued before last day of construction period covered by application.

E. Transmittal: Submit three signed and notarized original copies of each Application for Payment to Architect by a method ensuring receipt. One copy shall include waivers of lien and similar attachments if required.

   1. Transmit each copy with a transmittal form listing attachments and recording appropriate information about application.

F. Waivers of Mechanic's Lien: With each Application for Payment, submit waivers of mechanic's lien from entities lawfully entitled to file a mechanic's lien arising out of the Contract and related to the Work covered by the payment.

1. Submit partial waivers on each item for amount requested in previous application, after deduction for retainage, on each item.
2. When an application shows completion of an item, submit conditional final or full waivers.
3. Owner reserves the right to designate which entities involved in the Work must submit waivers.
4. Waiver Forms: Submit waivers of lien on forms, executed in a manner acceptable to Owner.

G. Initial Application for Payment: Administrative actions and submittals that must precede or coincide with submittal of first Application for Payment include the following:

1. List of subcontractors.
2. Schedule of values.
3. Contractor's construction schedule (preliminary if not final).
4. Schedule of unit prices.
5. Submittal schedule (preliminary if not final).
6. List of Contractor's staff assignments.
7. List of Contractor's principal consultants.
8. Copies of building permits.
9. Copies of authorizations and licenses from authorities having jurisdiction for performance of the Work.
10. Initial progress report.
11. Report of preconstruction conference.
12. Certificates of insurance and insurance policies.

H. Application for Payment at Substantial Completion: After issuing the Certificate of Substantial Completion, submit an Application for Payment showing 100 percent completion for portion of the Work claimed as substantially complete.

1. Include documentation supporting claim that the Work is substantially complete and a statement showing an accounting of changes to the Contract Sum.
2. This application shall reflect Certificates of Partial Substantial Completion issued previously for Owner occupancy of designated portions of the Work.

I. Final Payment Application: Submit final Application for Payment with releases and supporting documentation not previously submitted and accepted, including, but not limited, to the following:

1. Evidence of completion of Project closeout requirements.
2. Insurance certificates for products and completed operations where required and proof that taxes, fees, and similar obligations were paid.
3. Updated final statement, accounting for final changes to the Contract Sum.
4. AIA Document G706-1994, “Contractor's Affidavit of Payment of Debts and Claims.”
5. AIA Document G706A-1994, “Contractor's Affidavit of Release of Liens.”
6. AIA Document G707-1994, “Consent of Surety to Final Payment.”
7. Evidence that claims have been settled.

8. Final meter readings for utilities, a measured record of stored fuel, and similar data as of date of Substantial Completion or when Owner took possession of and assumed responsibility for corresponding elements of the Work.
9. Final liquidated damages settlement statement.

PART 2 - PRODUCTS (NOT APPLICABLE)

PART 3 - EXECUTION (NOT APPLICABLE)

END OF SECTION

SECTION 01 31 00
PROJECT MANAGEMENT AND COORDINATION

PART 1 - GENERAL

1.01 SUMMARY

A. Section includes administrative provisions for coordinating construction operations on Project including, but not limited to, the following:

1. General coordination procedures.
2. Coordination drawings.
3. RFIs.
4. Digital project management procedures.
5. Project meetings including:

a. Preconstruction conference.
b. Progress meetings.
c. Preinstallation conferences.
d. Project closeout conference.

B. Each contractor shall participate in coordination requirements. Certain areas of responsibility are assigned to a specific contractor.

C. Related Sections include:

1. Division 01 Section “Construction Progress Documentation” for preparing and submitting Contractor's construction schedule.
2. Division 01 Section “Execution” for procedures for coordinating general installation and field-engineering services, including establishment of benchmarks and control points.
3. Division 01 Section “Closeout Procedures” for coordinating closeout of the Contract.

1.02 DEFINITIONS

A. RFI: Request for Information. Request from Owner, Architect, or Contractor seeking information required by or clarifications of the Contract Documents.

1.03 INFORMATIONAL SUBMITTALS

A. Subcontract List: Prepare a written summary identifying individuals or firms proposed for each portion of the Work, including those who are to furnish products or equipment fabricated to a special design. Include the following information in tabular form:

1. Name, address, telephone number, and email address of entity performing subcontract or supplying products.
2. Number and title of related Specification Section(s) covered by subcontract.

3. Drawing number and detail references, as appropriate, covered by subcontract.

B. Key Personnel Names: Within 15 days of starting construction operations, submit a list of key personnel assignments, including superintendent and other personnel in attendance at Project site. Identify individuals and their duties and responsibilities; list addresses and cellular telephone numbers and e-mail addresses. Provide names, addresses, and telephone numbers of individuals assigned as alternates in the absence of individuals assigned to Project.

1. Post copies of list in project meeting room, in temporary field office, in web-based Project software directory, and in prominent location inbuilt facility. Keep list current at all times.

1.04 GENERAL COORDINATION PROCEDURES

A. Coordination: Coordinate construction operations included in different Sections of the Specifications to ensure efficient and orderly installation of each part of the Work. Coordinate construction operations included in different Sections that depend on each other for proper installation, connection, and operation.

1. Schedule construction operations in sequence required to obtain the best results where installation of one part of the Work depends on installation of other components, before or after its own installation.
2. Coordinate installation of different components to ensure maximum performance and accessibility for required maintenance, service, and repair.
3. Make adequate provisions to accommodate items scheduled for later installation.

B. Prepare memoranda for distribution to each party involved, outlining special procedures required for coordination. Include such items as required notices, reports, and list of attendees at meetings.

1. Prepare similar memoranda for Owner and separate contractors if coordination of their Work is required.

C. Administrative Procedures: Coordinate scheduling and timing of required administrative procedures with other construction activities to avoid conflicts and to ensure orderly progress of the Work. Such administrative activities include, but are not limited to, the following:

1. Preparation of Contractor's construction schedule.
2. Preparation of the schedule of values.
3. Installation and removal of temporary facilities and controls.
4. Delivery and processing of submittals.
5. Progress meetings.
6. Preinstallation conferences.
7. Project closeout activities.
8. Startup and adjustment of systems.

1.05 COORDINATION DRAWINGS

A. Coordination Drawings, General: Prepare coordination drawings according to requirements in individual Sections, and additionally where installation is not completely indicated on Shop

Drawings, where limited space availability necessitates coordination, or if coordination is required to facilitate integration of products and materials fabricated or installed by more than one entity.

1. Content: Project-specific information, drawn accurately to a scale large enough to indicate and resolve conflicts. Do not base coordination drawings on standard printed data. Include the following information, as applicable:

    a. Use applicable Drawings as a basis for preparation of coordination drawings. Prepare sections, elevations, and details as needed to describe relationship of various systems and components.
    b. Coordinate the addition of trade-specific information to coordination drawingsin a sequence that best provides for coordination of the information and resolution of conflicts between installed components before submitting for review.
    c. Indicate functional and spatial relationships of components of architectural, structural, civil, mechanical, and electrical systems.
    d. Indicate space requirements for routine maintenance and for anticipated replacement of components during the life of the installation.
    e. Show location and size of access doors required for access to concealed dampers, valves, and other controls.
    f. Indicate required installation sequences.
    g. Indicate dimensions shown on Drawings. Specifically note dimensions that appear to be in conflict with submitted equipment and minimum clearance requirements. Provide alternative sketches to Architect indicating proposed resolution of such conflicts. Minor dimension changes and difficult installations will not be considered changes to the Contract.

B. Coordination Drawing Organization: Organize coordination drawings as follows:

1. Floor Plans and Reflected Ceiling Plans: Show architectural and structural elements, and mechanical, plumbing, fire-protection, fire-alarm, and electrical Work. Show locations of visible ceiling-mounted devices relative to acoustical ceiling grid. Supplement plan drawings with section drawings where required to adequately represent the Work.
2. Plenum Space: Indicate subframing for support of ceiling and wall systems, mechanical and electrical equipment, and related Work. Locate components within plenums to accommodate layout of light fixtures and other components indicated on Drawings. Indicate areas of conflict between light fixtures and other components.
3. Mechanical Rooms: Provide coordination drawings for mechanical rooms showing plans and elevations of mechanical, plumbing, fire-protection, fire-alarm, and electrical equipment.
4. Structural Penetrations: Indicate penetrations and openings required for all disciplines.
5. Slab Edge and Embedded Items: Indicate slab edge locations and sizes and locations of embedded items for metal fabrications, sleeves, anchor bolts, bearing plates, angles, door floor closers, slab depressions for floor finishes, curbs and housekeeping pads, and similar items.
6. Mechanical and Plumbing Work: Show the following:

    a. Sizes and bottom elevations of ductwork, piping, and conduit runs, including insulation, bracing, flanges, and support systems.

b. Dimensions of major components, such as dampers, valves, diffusers, access doors, cleanouts and electrical distribution equipment.
c. Fire-rated enclosures around ductwork.

7. Electrical Work: Show the following:

a. Runs of vertical and horizontal conduit 1-1/4 inches in diameter and larger.
b. Light fixture, exit light, emergency battery pack, smoke detector, and other fire-alarm locations.
c. Panel board, switch board, switchgear, transformer, busway, generator, and motor-control center locations.
d. Location of pull boxes and junction boxes, dimensioned from column center lines.

8. Fire-Protection System: Show the following:

a. Locations of standpipes, mains piping, branch lines, pipe drops, and sprinkler heads.

9. Review: Architect will review coordination drawings to confirm that in general the Work is being coordinated, but not for the details of the coordination, which are Contractor's responsibility. If Architect determines that coordination drawings are not being prepared in sufficient scope or detail, or are otherwise deficient, Architect will so inform Contractor, who shall make suitable modifications and resubmit.
10. Coordination Drawing Prints: Prepare coordination drawing prints according to requirements in Division 01 Section "Submittal Procedures."

C. Coordination Digital Data Files: Prepare coordination digital data files according to the following requirements:

1. File Preparation Format: Same digital data software program, version, and operating system as original Drawings.
2. File Submittal Format: Submit or post coordination drawing files using PDF format.
3. Architect will furnish Contractor one set of digital data files of Drawings for use in preparing coordination digital data files.

a. Architect makes no representations as to the accuracy or completeness of digital data files as they relate to Drawings.
b. Contractor shall execute a data licensing agreement in the form of AIA Document C106.

1.06 REQUEST FOR INFORMATION (RFI)

A. General: Immediately on discovery of the need for additional information, clarification, or interpretation of the Contract Documents, Contractor shall prepare and submit an RFI in the form specified.

1. Architect will return without response those RFIs submitted to Architect by other entities controlled by Contractor.
2. Coordinate and submit RFIs in a prompt manner so as to avoid delays in Contractor's work or work of subcontractors.

B. Content of the RFI: Include a detailed, legible description of item needing information or interpretation and the following:

1. Project name.
2. Project number.
3. Date.
4. Name of Contractor.
5. Name of Architect.
6. RFI number, numbered sequentially.
7. RFI subject.
8. Specification Section number and title and related paragraphs, as appropriate.
9. Drawing number and detail references, as appropriate.
10. Field dimensions and conditions, as appropriate.
11. Contractor's suggested resolution. If Contractor's suggested resolution impacts the Contract Time or the Contract Sum, Contractor shall state impact in the RFI.
12. Contractor's signature.
13. Attachments: Include sketches, descriptions, measurements, photos, Product Data, Shop Drawings, coordination drawings, and other information necessary to fully describe items needing interpretation.

    a. Include dimensions, thicknesses, structural grid references, and details of affected materials, assemblies, and attachments on attached sketches.

C. RFI Forms: Software-generated form with substantially the same content as indicated above, acceptable to Architect.

1. Attachments shall be electronic files in PDF format.

D. Architect's Action: Architect will review each RFI, determine action required, and respond. Allow seven working days for Architect's response for each RFI. RFIs received by Architect after 1:00 p.m. will be considered as received the following working day.

1. The following Contractor-generated RFIs will be returned without action:

    a. Requests for approval of submittals.
    b. Requests for approval of substitutions.
    c. Requests for approval of Contractor's means and methods.
    d. Requests for coordination information already indicated in the Contract Documents.
    e. Requests for adjustments in the Contract Time or the Contract Sum.
    f. Requests for interpretation of Architect's actions on submittals.
    g. Incomplete RFIs or inaccurately prepared RFIs.

2. Architect's action may include a request for additional information, in which case Architect's time for response will date from time of receipt by Architect of additional information.
3. Architect's action on RFIs that may result in a change to the Contract Time or the Contract Sum may be eligible for Contractor to submit Change Proposal according to Section 012600 “Contract Modification Procedures.”

a. If Contractor believes the RFI response warrants change in the Contract Time or the Contract Sum, notify Architect in writing within 10 days of receipt of the RFI response.

E. RFI Log: Prepare, maintain, and submit a tabular log of RFIs organized by the RFI number. Submit log weekly. Use software log that is part of web-based Project software.

F. On receipt of Architect's action, update the RFI log and immediately distribute the RFI response to affected parties. Review response and notify Architect within seven days if Contractor disagrees with response.

1.07 DIGITAL PROJECT MANAGEMENT PROCEDURES

A. Use of Architect's Digital Data Files: Digital data files will be provided by Architect for Contractor's use during construction.

1. Digital data files may be used by Contractor in preparing coordination drawings, Shop Drawings, and Project record Drawings.
2. Architect makes no representations as to the accuracy or completeness of digital data files as they relate to Contract Drawings.
3. Contractor shall execute a data licensing agreement in the form of AIA Document C106 Digital Data Licensing Agreement.

a. Subcontractors, and other parties granted access by Contractor to Architect's digital data files shall execute a data licensing agreement in the form of AIA Document C106

4. The following digital data files will be furnished for each appropriate discipline:

a. Floor plans.
b. Reflected ceiling plans.

B. [**Web-Based Project Software:**]Provide, administer, and use web-based Project software site for purposes of hosting and managing Project communication and documentation until Final Completion.

1. Web-based Project software site includes, at a minimum, the following features:

a. Compilation of Project data, including Contractor, subcontractors, Architect, architect's consultants, Owner, and other entities involved in Project. Include names of individuals and contact information.
b. Access control for each entity for each workflow process, to determine entity's digital rights to create, modify, view, and print documents.
c. Document workflow planning, allowing customization of workflow between project entities.
d. Creation, logging, tracking, and notification for Project communications required in other Specification Sections, including, but not limited to, RFIs, submittals, Minor Changes in the Work, Construction Change Directives, and Change Orders.

e. Track status of each Project communication in real time, and log time and date when responses are provided.
f. Procedures for handling PDFs or similar file formats, allowing markups by each entity. Provide security features to lock markups against changes once submitted.
g. Processing and tracking of payment applications.
h. Processing and tracking of contract modifications.
i. Creating and distributing meeting minutes.
j. Document management for Drawings, Specifications, and coordination drawings, including revision control.
k. Management of construction progress photographs.
l. Mobile device compatibility, including smartphones and tablets.

2. Provide up to seven web-based Project software user licenses for use of Owner, Architect, and Architect's consultants. Provide eight hours of software training at Architect's office for web-based Project software users.
3. At completion of Project, provide digital archive in format that is readable by common desktop software applications in format acceptable to Architect. Provide data in locked format to prevent further changes.

C. PDF Document Preparation: Where PDFs are required to be submitted to Architect, prepare as follows:

1. Assemble complete submittal package into a single indexed file incorporating submittal requirements of a single Specification Section and transmittal form with links enabling navigation to each item.
2. Name file with submittal number or other unique identifier, including revision identifier.
3. Certifications: Where digitally submitted certificates and certifications are required, provide a digital signature with digital certificate on where indicated.

1.08 PROJECT MEETINGS

A. General: Schedule and conduct meetings and conferences at Project site unless otherwise indicated.

1. Attendees: Inform participants and others involved, and individuals whose presence is required, of date and time of each meeting. Notify Owner and Architect of scheduled meeting dates and times a minimum of 10 working days prior to meeting.
2. Agenda: Prepare the meeting agenda. Distribute the agenda to all invited attendees.
3. Minutes: Entity responsible for conducting meeting will record significant discussions and agreements achieved. Distribute the meeting minutes to everyone concerned, including Owner and Architect, within three days of the meeting.

B. Preconstruction Conference: Owner will schedule and conduct a preconstruction conference before starting construction, at a time convenient to Owner and Architect, but no later than 15 days after execution of the Agreement.

1. Attendees: Authorized representatives of Owner, Owner's Commissioning Authority, Architect, and their consultants; Contractor and its superintendent; major subcontractors; suppliers; and other concerned parties shall attend the conference. Participants at the

conference shall be familiar with Project and authorized to conclude matters relating to the Work.

2. Agenda: Discuss items of significance that could affect progress, including the following:

   a. Responsibilities and personnel assignments.
   b. Tentative construction schedule.
   c. Critical work sequencing and long lead items.
   d. Designation of key personnel and their duties.
   e. Lines of communications.
   f. Use of web-based Project software.
   g. Procedures for processing field decisions and Change Orders.
   h. Procedures for RFIs.
   i. Procedures for testing and inspecting.
   j. Procedures for processing Applications for Payment.
   k. Distribution of the Contract Documents.
   l. Submittal procedures.
   m. Preparation of Record Documents.
   n. Use of the premises.
   o. Work restrictions.
   p. Working hours.
   q. Owner's occupancy requirements.
   r. Responsibility for temporary facilities and controls.
   s. Procedures for moisture and mold control.
   t. Procedures for disruptions and shutdowns.
   u. Construction waste management and recycling.
   v. Parking availability.
   w. Office, work, and storage areas.
   x. Equipment deliveries and priorities.
   y. First aid.
   z. Security.
   aa. Progress cleaning.

3. Minutes: Entity responsible for conducting meeting will record and distribute meeting minutes.

C. Progress Meetings: Conduct progress meetings at regular intervals.

1. Coordinate dates of meetings with preparation of payment requests.
2. Attendees: In addition to representatives of Owner, Owner's Commissioning Authority, and Architect, each contractor, subcontractor, supplier, and other entity concerned with current progress or involved in planning, coordination, or performance of future activities shall be represented at these meetings. All participants at the meeting shall be familiar with Project and authorized to conclude matters relating to the Work.
3. Agenda: Review and correct or approve minutes of previous progress meeting. Review other items of significance that could affect progress. Include topics for discussion as appropriate to status of Project.

   a. Contractor's Construction Schedule: Review progress since the last meeting. Determine whether each activity is on time, ahead of schedule, or behind schedule, in relation to Contractor's construction schedule. Determine how construction behind schedule will be expedited; secure commitments from parties involved to do so. Discuss whether schedule revisions are required to ensure that current and subsequent activities will be completed within the Contract Time.

1) Review schedule for next period.

b. Review present and future needs of each entity present, including the following:

1) Interface requirements.
2) Sequence of operations.
3) Resolution of BIM component conflicts.
4) Status of submittals.
5) Deliveries.
6) Off-site fabrication.
7) Access.
8) Site use.
9) Temporary facilities and controls.
10) Progress cleaning.
11) Quality and work standards.
12) Status of correction of deficient items.
13) Field observations.
14) Status of RFIs.
15) Status of Proposal Requests.
16) Pending changes.
17) Status of Change Orders.
18) Pending claims and disputes.
19) Documentation of information for payment requests.

4. Minutes: Entity responsible for conducting the meeting will record and distribute the meeting minutes to each party present and to parties requiring information.

a. Schedule Updating: Revise Contractor's construction schedule after each progress meeting where revisions to the schedule have been made or recognized. Issue revised schedule concurrently with the report of each meeting.

D. Preinstallation Conferences: Conduct a preinstallation conference at Project site before each construction activity when required by other sections and when required for coordination with other construction.

1. Attendees: Installer and representatives of manufacturers and fabricators involved in or affected by the installation and its coordination or integration with other materials and installations that have preceded or will follow, shall attend the meeting. Advise Architect of scheduled meeting dates.
2. Agenda: Review progress of other construction activities and preparations for the particular activity under consideration, including requirements for the following:

a. Contract Documents.
b. Options.
c. Related RFIs.
d. Related Change Orders.

e. Purchases.
f. Deliveries.
g. Submittals.
h. Review of mockups.
i. Possible conflicts.
j. Compatibility requirements.
k. Time schedules.
l. Weather limitations.
m. Manufacturer's written instructions.
n. Warranty requirements.
o. Compatibility of materials.
p. Acceptability of substrates.
q. Temporary facilities and controls.
r. Space and access limitations.
s. Regulations of authorities having jurisdiction.
t. Testing and inspecting requirements.
u. Installation procedures.
v. Coordination with other work.
w. Required performance results.
x. Protection of adjacent work.
y. Protection of construction and personnel.

3. Record significant conference discussions, agreements, and disagreements, including required corrective measures and actions.
4. Reporting: Distribute minutes of the meeting to each party present and to other parties requiring information.
5. Do not proceed with installation if the conference cannot be successfully concluded. Initiate whatever actions are necessary to resolve impediments to performance of the Work and reconvene the conference at earliest feasible date.

E. Project Closeout Conference: Schedule and conduct a project closeout conference, at a time convenient to Owner and Architect, but no later than 60 days prior to the scheduled date of Substantial Completion.

1. Conduct the conference to review requirements and responsibilities related to Project closeout.
2. Attendees: Authorized representatives of Owner, Owner's Commissioning Authority, Architect, and their consultants; Contractor and its superintendent; major subcontractors; suppliers; and other concerned parties shall attend the meeting. Participants at the meeting shall be familiar with Project and authorized to conclude matters relating to the Work.
3. Agenda: Discuss items of significance that could affect or delay Project closeout, including the following:

a. Preparation of Record Documents.
b. Procedures required prior to inspection for Substantial Completion and for final inspection for acceptance.
c. Procedures for completing and archiving web-based Project software site data files.
d. Submittal of written warranties.
e. Requirements for preparing operations and maintenance data.
f. Requirements for delivery of material samples, attic stock, and spare parts.

g. Requirements for demonstration and training.
h. Preparation of Contractor's punch list.
i. Procedures for processing Applications for Payment at Substantial Completion and for final payment.
j. Submittal procedures.
k. Coordination of separate contracts.
l. Owner's partial occupancy requirements.
m. Installation of Owner's furniture, fixtures, and equipment.
n. Responsibility for removing temporary facilities and controls.

4. Minutes: Entity conducting meeting will record and distribute meeting minutes.

PART 2 - PRODUCTS (NOT APPLICABLE)

PART 3 - EXECUTION (NOT APPLICABLE)

END OF SECTION

SECTION 01 32 00
CONSTRUCTION PROGRESS DOCUMENTATION

PART 1 - GENERAL

1.01 SUMMARY

A. Section includes administrative and procedural requirements for documenting the progress of construction during performance of the Work, including the following:

1. Contractor's construction schedule.
2. Daily construction reports.
3. Field condition reports.

1.02 DEFINITIONS

A. Activity: A discrete part of a project that can be identified for planning, scheduling, monitoring, and controlling the construction project. Activities included in a construction schedule consume time and resources.

1. Critical Activity: An activity on the critical path that must start and finish on the planned early start and finish times.
2. Predecessor Activity: An activity that precedes another activity in the network.
3. Successor Activity: An activity that follows another activity in the network.

B. CPM: Critical path method, which is a method of planning and scheduling a construction project where activities are arranged based on activity relationships. Network calculations determine when activities can be performed and the critical path of the Project.

C. Critical Path: The longest connected chain of interdependent activities through the network schedule that establishes the minimum overall Project duration and contains no float.

D. Float: The measure of leeway in starting and completing an activity.

1. Float time is not for the exclusive use or benefit of either Owner or Contractor, but is a jointly owned, expiring Project resource available to both parties as needed to meet schedule milestones and Contract completion date.

1.03 INFORMATIONAL SUBMITTALS

A. Format for Submittals: Submit required submittals in PDF electronic file format.

B. Contractor's Construction Schedule: Initial schedule, of size required to display entire schedule for entire construction period.

C. CPM Reports: Concurrent with CPM schedule, submit each of the following reports. Format for each activity in reports shall contain activity number, activity description, original duration, remaining duration, early start date, early finish date, late start date, late finish date, and total float in calendar days.

1. Activity Report: List of all activities sorted by activity number and then early start date, or actual start date if known.
2. Logic Report: List of preceding and succeeding activities for all activities, sorted in ascending order by activity number and then early start date, or actual start date if known.
3. Total Float Report: List of all activities sorted in ascending order of total float.

D. Daily Construction Reports: Submit at weekly intervals.

E. Field Condition Reports: Submit at time of discovery of differing conditions.

1.04 COORDINATION

A. Coordinate preparation and processing of schedules and reports with performance of construction activities and with scheduling and reporting of separate contractors.

B. Coordinate Contractor's construction schedule with the schedule of values, list of subcontracts, submittal schedule, progress reports, payment requests, and other required schedules and reports.

1. Secure time commitments for performing critical elements of the Work from entities involved.
2. Coordinate each construction activity in the network with other activities and schedule them in proper sequence.

PART 2 - PRODUCTS

2.01 CONTRACTOR'S CONSTRUCTION SCHEDULE, GENERAL

A. Time Frame: Extend schedule from date established for the Notice to Proceed to date of final completion.

1. Contract completion date shall not be changed by submission of a schedule that shows an early completion date, unless specifically authorized by Change Order.

B. Activities: Treat each story or separate area as a separate numbered activity for each principal element of the Work. Comply with the following:

1. Activity Duration: Define activities so no activity is longer than 20 days, unless specifically allowed by Architect.
2. Procurement Activities: Include procurement process activities for the following long lead items and major items, requiring a cycle of more than 60 days, as separate activities in schedule. Procurement cycle activities include, but are not limited to, submittals, approvals, purchasing, fabrication, and delivery.

3. Submittal Review Time: Include review and resubmittal times indicated in Division 01 Section "Submittal Procedures" in schedule. Coordinate submittal review times in Contractor's construction schedule with submittal schedule.
4. Startup and Testing Time: Include not less than 15 days for startup and testing.
5. Substantial Completion: Indicate completion in advance of date established for Substantial Completion, and allow time for Architect's administrative procedures necessary for certification of Substantial Completion.
6. Punch List and Final Completion: Include not more than 30 days for punch list and final completion.

C. Constraints: Include constraints and work restrictions indicated in the Contract Documents and as follows in schedule, and show how the sequence of the Work is affected.

1. Work under More Than One Contract: Include a separate activity for each contract.
2. Work by Owner: Include a separate activity for each portion of the Work performed by Owner.
3. Work Restrictions: Show the effect of the following items on the schedule:

   a. Coordination with existing construction.
   b. Limitations of continued occupancies.
   c. Uninterruptible services.
   d. Partial occupancy before Substantial Completion.
   e. Use of premises restrictions.
   f. Provisions for future construction.
   g. Seasonal variations.
   h. Environmental control.

D. Milestones: Include milestones indicated in the Contract Documents in schedule, including, but not limited to, the Notice to Proceed, Substantial Completion, and final completion.

E. Upcoming Work Summary: Prepare summary report indicating activities scheduled to occur or commence prior to submittal of next schedule update. Summarize the following issues:

1. Unresolved issues.
2. Unanswered RFIs.
3. Rejected or unreturned submittals.
4. Notations on returned submittals.

F. Recovery Schedule: When periodic update indicates the Work is 14 or more calendar days behind the current approved schedule, submit a separate recovery schedule indicating means by which Contractor intends to regain compliance with the schedule.

G. Computer Scheduling Software: Prepare schedules using current version of a program that has been developed specifically to manage construction schedules.

2.02 CONTRACTOR'S CONSTRUCTION SCHEDULE (CPM SCHEDULE)

A. CPM Schedule: Prepare Contractor's construction schedule using a time-scaled CPM network analysis diagram for the Work.

1. Develop network diagram in sufficient time to submit CPM schedule so it can be accepted for use no later than 30 days after date established for the Notice to Proceed.

    a. Failure to include any work item required for performance of this Contract shall not excuse Contractor from completing all work within applicable completion dates, regardless of Architect's approval of the schedule.

2. Establish procedures for monitoring and updating CPM schedule and for reporting progress. Coordinate procedures with progress meeting and payment request dates.
3. Use "one workday" as the unit of time for individual activities. Indicate nonworking days and holidays incorporated into the schedule in order to correlate with Contract Time.

B. CPM Schedule Preparation: Prepare a list of all activities required to complete the Work.

1. Activities: Indicate the estimated time duration, sequence requirements, and relationship of each activity in relation to other activities. Include estimated time frames for the following activities:

    a. Preparation and processing of submittals.
    b. Mobilization and demobilization.
    c. Purchase of materials.
    d. Delivery.
    e. Fabrication.
    f. Utility interruptions.
    g. Installation.
    h. Work by Owner that may affect or be affected by Contractor's activities.
    i. Testing.
    j. Punch list and final completion.
    k. Activities occurring following final completion.

2. Critical Path Activities: Identify critical path activities, including those for interim completion dates. Scheduled start and completion dates shall be consistent with Contract milestone dates.
3. Processing: Process data to produce output data on a computer-drawn, time-scaled network. Revise data, reorganize activity sequences, and reproduce as often as necessary to produce the CPM schedule within the limitations of the Contract Time.
4. Format: Mark the critical path. Locate the critical path near center of network; locate paths with most float near the edges.

    a. Subnetworks on separate sheets are permissible for activities clearly off the critical path.

C. Contract Modifications: For each proposed contract modification and concurrent with its submission, prepare a time-impact analysis using a network fragment to demonstrate the effect of the proposed change on the overall project schedule.

D. Initial Issue of Schedule: Prepare initial network diagram from a sorted activity list indicating straight "early start-total float." Identify critical activities. Prepare tabulated reports showing the following:

1. Contractor or subcontractor and the Work or activity.
2. Description of activity.
3. Principal events of activity.
4. Immediate preceding and succeeding activities.
5. Early and late start dates.
6. Early and late finish dates.
7. Activity duration in workdays.
8. Total float or slack time.
9. Average size of workforce.
10. Dollar value of activity (coordinated with the schedule of values).

E. Schedule Updating: Concurrent with making revisions to schedule, prepare tabulated reports showing the following:

1. Identification of activities that have changed.
2. Changes in early and late start dates.
3. Changes in early and late finish dates.
4. Changes in activity durations in workdays.
5. Changes in the critical path.
6. Changes in total float or slack time.
7. Changes in the Contract Time.

2.03 REPORTS

A. Daily Construction Reports: Prepare a daily construction report recording the following information concerning events at Project site:

1. List of subcontractors at Project site.
2. List of separate contractors at Project site.
3. Approximate count of personnel at Project site.
4. Equipment at Project site.
5. Material deliveries.
6. High and low temperatures and general weather conditions, including presence of rain or snow.
7. Accidents.
8. Meetings and significant decisions.
9. Unusual events.
10. Stoppages, delays, shortages, and losses.
11. Meter readings and similar recordings.
12. Emergency procedures.
13. Orders and requests of authorities having jurisdiction.
14. Change Orders received and implemented.
15. Construction Change Directives received and implemented.
16. Services connected and disconnected.
17. Equipment or system tests and startups.
18. Partial completions and occupancies.
19. Substantial Completions authorized.

B. Field Condition Reports: Immediately on discovery of a difference between field conditions and the Contract Documents, prepare and submit a detailed report. Submit with a Request for Information. Include a detailed description of the differing conditions, together with recommendations for changing the Contract Documents.

PART 3 - EXECUTION

3.01 CONTRACTOR'S CONSTRUCTION SCHEDULE

A. Contractor's Construction Schedule Updating: At monthly intervals, update schedule to reflect actual construction progress and activities. Issue schedule one week before each regularly scheduled progress meeting.

1. Revise schedule immediately after each meeting or other activity where revisions have been recognized or made. Issue updated schedule concurrently with the report of each such meeting.
2. Include a report with updated schedule that indicates every change, including, but not limited to, changes in logic, durations, actual starts and finishes, and activity durations.
3. As the Work progresses, indicate final completion percentage for each activity.

B. Distribution: Distribute copies of approved schedule to Architect Owner, separate contractors, testing and inspecting agencies, and other parties identified by Contractor with a need-to-know schedule responsibility.

1. Post copies in Project meeting rooms and temporary field offices.
2. When revisions are made, distribute updated schedules to the same parties and post in the same locations. Delete parties from distribution when they have completed their assigned portion of the Work and are no longer involved in performance of construction activities.

END OF SECTION

SECTION 01 33 00
SUBMITTAL PROCEDURES

PART 1 - GENERAL

1.01 SUMMARY

A. Section includes requirements for the submittal schedule and administrative and procedural requirements for submitting Shop Drawings, Product Data, Samples, and other submittals.

B. Related Sections:

1. Division 01 Section “Construction Progress Documentation” for submitting schedules and reports, including Contractor's construction schedule.
2. Division 01 Section “Operation and Maintenance Data” for submitting operation and maintenance manuals.
3. Division 01 Section “Project Record Documents” for submitting record Drawings, record Specifications, and record Product Data.
4. Division 01 Section “Demonstration and Training” for submitting video recordings of demonstration of equipment and training of Owner's personnel.

1.02 DEFINITIONS

A. Action Submittals: Written and graphic information and physical samples that require Architect's responsive action.

B. Informational Submittals: Written and graphic information and physical samples that do not require Architect's responsive action. Submittals may be rejected for not complying with requirements.

1.03 ACTION SUBMITTALS

A. Submittal Schedule: Submit a schedule of submittals, arranged in chronological order by dates required by construction schedule. Include time required for review, ordering, manufacturing, fabrication, and delivery when establishing dates. Include additional time required for making corrections or modifications to submittals noted by the Architect and additional time for handling and reviewing submittals required by those corrections.

1.04 SUBMITTAL ADMINISTRATIVE REQUIREMENTS

A. Architect's Digital Data Files: Electronic copies of Drawings of the Contract Drawings may be provided by Architect for Contractor's use in preparing submittals.

1. Architect will furnish Contractor electronic files for use in preparing Shop Drawings as follows:

a. One set of digital data drawing files in CAD format for floor plans and reflected ceiling plans of the Contract Drawings at no cost.
b. One set of the Contract Drawings in PDF format at no cost.

2. Architect makes no representations as to the accuracy or completeness of digital data drawing files as they relate to the Contract Drawings.
3. Contractor shall complete and execute Architect's "Electronic File Release Form" and, if applicable, "Electronic File Conversion Agreement" unless otherwise directed.

B. Coordination: Coordinate preparation and processing of submittals with performance of construction activities.

1. Coordinate each submittal with fabrication, purchasing, testing, delivery, other submittals, and related activities that require sequential activity.
2. Coordinate transmittal of different types of submittals for related parts of the Work so processing will not be delayed because of need to review submittals concurrently for coordination.

a. Architect reserves the right to withhold action on a submittal requiring coordination with other submittals until related submittals are received.

C. Processing Time: Allow time for submittal review, including time for resubmittals, as follows. Time for review shall commence on Architect's receipt of submittal. No extension of the Contract Time will be authorized because of failure to transmit submittals enough in advance of the Work to permit processing, including resubmittals.

1. Initial Review: Allow 15 days for initial review of each submittal. Allow additional time if coordination with subsequent submittals is required. Architect will advise Contractor when a submittal being processed must be delayed for coordination.

a. Consultant Review: Allow 15 days for initial review of each submittal in addition to time allowed for Architect's review. Allow additional time if coordination with subsequent submittals is required.

2. Intermediate Review: If intermediate submittal is necessary, process it in same manner as initial submittal.
3. Resubmittal Review: Allow 15 days for review of each resubmittal.
4. Concurrent Consultant Review: Where submittals required by the Contract Documents are be reviewed by the Architect's consultants, transmit submittal directly to consultant with one copy sent simultaneously to Architect, allow working 21 days for review of each submittal. Submittal will be returned to Architect before being returned to Contractor.
5. No extension of contract time will be authorized or approved because of the Contractor's failure to transmit submittals to the Architect sufficiently in advance of the Work to permit processing and review by the Architect.

D. Paper Submittals: Place a permanent label or title block on each submittal item for identification.

1. Indicate name of firm or entity that prepared each submittal on label or title block.
2. Provide a space approximately 6 by 8 inches on label or beside title block to record Contractor's review and approval markings and action taken by Architect.

3. Include the following information for processing and recording action taken:

    a. Project name.
    b. Date.
    c. Name of Architect.
    d. Name of Contractor.
    e. Name of subcontractor.
    f. Name of supplier.
    g. Name of manufacturer.
    h. Submittal number or other unique identifier, including revision identifier.

        1) Submittal number shall use Specification Section number followed by a decimal point and then a sequential number (e.g., 061000.01). Resubmittals shall include an alphabetic suffix after another decimal point (e.g., 061000.01.A).

    i. Number and title of appropriate Specification Section.
    j. Drawing number and detail references, as appropriate.
    k. Location(s) where product is to be installed, as appropriate.
    l. Other necessary identification.

4. Additional Paper Copies: Unless additional copies are required for final submittal, and unless Architect observes noncompliance with provisions in the Contract Documents, initial submittal may serve as final submittal.

    a. Submit one copy of submittal to concurrent reviewer in addition to specified number of copies to Architect.

5. Transmittal for Paper Submittals: Assemble each submittal individually and appropriately for transmittal and handling. Transmit each submittal using a transmittal form. Architect will return without review submittals received from sources other than Contractor.

    a. Transmittal Form for Paper Submittals: Provide locations on form for the following information:

        1) Project name.
        2) Date.
        3) Destination (To:).
        4) Source (From:).
        5) Name and address of Architect.
        6) Name of Contractor.
        7) Name of firm or entity that prepared submittal.
        8) Names of subcontractor, manufacturer, and supplier.
        9) Category and type of submittal.
        10) Submittal purpose and description.
        11) Specification Section number and title.
        12) Specification paragraph number or drawing designation and generic name for each of multiple items.
        13) Drawing number and detail references, as appropriate.
        14) Indication of full or partial submittal.

15) Transmittal number.
16) Submittal and transmittal distribution record.
17) Remarks.
18) Signature of transmitter.

E. Electronic Submittals: Identify and incorporate information in each electronic submittal file as follows:

1. Assemble complete submittal package into a single indexed file incorporating submittal requirements of a single Specification Section and transmittal form with links enabling navigation to each item.
2. Name file with submittal number or other unique identifier, including revision identifier.

   a. File name shall use project identifier and Specification Section number followed by a decimal point and then a sequential number (e.g., LNHS-061000.01). Resubmittals shall include an alphabetic suffix after another decimal point (e.g., LNHS-061000.01.A).

3. Provide means for insertion to permanently record Contractor's review and approval markings and action taken by Architect.
4. Transmittal Form for Electronic Submittals: Use electronic form acceptable to Owner, containing the following information:

   a. Project name.
   b. Date.
   c. Name and address of Architect.
   d. Name of Contractor.
   e. Name of firm or entity that prepared submittal.
   f. Names of subcontractor, manufacturer, and supplier.
   g. Category and type of submittal.
   h. Submittal purpose and description.
   i. Specification Section number and title.
   j. Specification paragraph number or drawing designation and generic name for each of multiple items.
   k. Drawing number and detail references, as appropriate.
   l. Location(s) where product is to be installed, as appropriate.
   m. Related physical samples submitted directly.
   n. Indication of full or partial submittal.
   o. Transmittal number.
   p. Submittal and transmittal distribution record.
   q. Other necessary identification.
   r. Remarks.

5. Metadata: Include the following information as keywords in the electronic submittal file metadata:

   a. Project name.
   b. Number and title of appropriate Specification Section.
   c. Manufacturer name.
   d. Product name.

F. Options: Identify options requiring selection by the Architect.

G. Deviations: Identify deviations from the Contract Documents on submittals.

H. Resubmittals: Make resubmittals in same form and number of copies as initial submittal.

1. Note date and content of previous submittal.
2. Note date and content of revision in label or title block and clearly indicate extent of revision.
3. Resubmit submittals until they are marked with approval notation from Architect's action stamp.

I. Distribution: Furnish copies of final submittals to manufacturers, subcontractors, suppliers, fabricators, installers, authorities having jurisdiction, and others as necessary for performance of construction activities. Show distribution on transmittal forms.

J. Use for Construction: Use only final submittals that are marked with approval notation from Architect's action stamp.

PART 2 - PRODUCTS

2.01 SUBMITTAL PROCEDURES

A. General Submittal Procedure Requirements:

1. Submit electronic submittals via email as PDF electronic files.

   a. Architect will return annotated file. Annotate and retain one copy of file as an electronic Project record document file.

2. Action Submittals: Submit three paper copies of each submittal, unless otherwise indicated. Contractor shall keep one copy for Owner. Architect will return two copies.
3. Informational Submittals: Submit one paper copy of each submittal, unless otherwise indicated. Architect will not return copies.
4. Closeout Submittals and Maintenance Material Submittals: Comply with requirements specified in Division 01 Section “Closeout Procedures.”
5. Certificates and Certifications Submittals: Provide a statement that includes signature of entity responsible for preparing certification. Certificates and certifications shall be signed by an officer or other individual authorized to sign documents on behalf of that entity.

   a. Provide a digital signature with digital certificate on electronically-submitted certificates and certifications where indicated.
   b. Provide a notarized statement on original paper copy certificates and certifications where indicated.

6. Test and Inspection Reports Submittals: Comply with requirements specified in Division 01 Section “Quality Requirements.”

B. Product Data: Collect information into a single submittal for each element of construction and type of product or equipment.

1. If information must be specially prepared for submittal because standard published data are not suitable for use, submit as Shop Drawings, not as Product Data.
2. Mark each copy of each submittal to show which products and options are applicable.
3. Include the following information, as applicable:

   a. Manufacturer's catalog cuts.
   b. Manufacturer's product specifications.
   c. Standard color charts.
   d. Statement of compliance with specified referenced standards.
   e. Testing by recognized testing agency.
   f. Application of testing agency labels and seals.
   g. Notation of coordination requirements.
   h. Availability and delivery time information.

4. For equipment, include the following in addition to the above, as applicable:

   a. Wiring diagrams showing factory-installed wiring.
   b. Printed performance curves.
   c. Operational range diagrams.
   d. Clearances required to other construction, if not indicated on accompanying Shop Drawings.

5. Submit Product Data before or concurrent with Samples.
6. Submit Product Data in one of the following formats at the Contractor’s option:

   a. PDF electronic file.
   b. Three paper copies of Product Data unless otherwise indicated. Architect will return two copies.

C. Shop Drawings: Prepare Project-specific information, drawn accurately to scale. Do not base Shop Drawings on reproductions of the Contract Documents or standard printed data, unless submittal based upon Architect's digital data drawing files is otherwise permitted.

1. Preparation: Fully illustrate requirements in the Contract Documents. Include the following information, as applicable:

   a. Identification of products.
   b. Schedules.
   c. Compliance with specified standards.
   d. Notation of coordination requirements.
   e. Notation of dimensions established by field measurement.
   f. Relationship and attachment to adjoining construction clearly indicated.
   g. Seal and signature of professional engineer if specified.

2. Sheet Size: Except for templates, patterns, and similar full-size drawings, submit Shop Drawings on sheets at least 8-1/2 by 11 inches but no larger than 30 by 40 inches.
3. Submit Shop Drawings in in one of the following formats at the Contractor’s option:

a. PDF electronic file.
b. Three opaque copies of each submittal. Architect will retain two copies; remainder will be returned.

D. Samples: Submit Samples for review of kind, color, pattern, and texture for a check of these characteristics with other elements and for a comparison of these characteristics between submittal and actual component as delivered and installed.

1. Transmit Samples that contain multiple, related components such as accessories together in one submittal package.
2. Identification: Attach label on unexposed side of Samples that includes the following:

   a. Generic description of Sample.
   b. Product name and name of manufacturer.
   c. Sample source.
   d. Number and title of applicable Specification Section.

3. Disposition: Maintain sets of approved Samples at Project site, available for quality-control comparisons throughout the course of construction activity. Sample sets may be used to determine final acceptance of construction associated with each set.

   a. Samples that may be incorporated into the Work are indicated in individual Specification Sections. Such Samples must be in an undamaged condition at time of use.
   b. Samples not incorporated into the Work, or otherwise designated as Owner's property, are the property of Contractor.

4. Samples for Initial Selection: Submit manufacturer's color charts consisting of units or sections of units showing the full range of colors, textures, and patterns available.

   a. Number of Samples: Submit one full set(s) of available choices where color, pattern, texture, or similar characteristics are required to be selected from manufacturer's product line. Architect will return submittal with options selected.

5. Samples for Verification: Submit full-size units or Samples of size indicated, prepared from same material to be used for the Work, cured and finished in manner specified, and physically identical with material or product proposed for use, and that show full range of color and texture variations expected. Samples include, but are not limited to, the following: partial sections of manufactured or fabricated components; small cuts or containers of materials; complete units of repetitively used materials; swatches showing color, texture, and pattern; color range sets; and components used for independent testing and inspection.

   a. Number of Samples: Submit three sets of Samples. Architect will retain two Sample sets; remainder will be returned. Mark up and retain one returned Sample set as a Project record sample.

      1) If variation in color, pattern, texture, or other characteristic is inherent in material or product represented by a Sample, submit at least three sets of paired units that show approximate limits of variations.

E. Product Schedule: As required in individual Specification Sections, prepare a written summary indicating types of products required for the Work and their intended location. Include the following information in tabular form:

1. Submit product schedule in one of the following formats at the Contractor's option:

a. PDF electronic file.
b. Three paper copies of product schedule or list unless otherwise indicated. Architect will return two copies.

F. Contractor's Construction Schedule: Comply with requirements specified in Division 01 Section "Construction Progress Documentation."

G. Application for Payment and Schedule of Values: Comply with requirements specified in Division 01 Section "Payment Procedures."

H. Subcontract List: Prepare a written summary identifying individuals or firms proposed for each portion of the Work, including those who are to furnish products or equipment fabricated to a special design.

1. Submit subcontract list in one of the following formats at the Contractor's option:

a. PDF electronic file.
b. Three paper copies of subcontract list unless otherwise indicated. Architect will return two copies.

I. Coordination Drawings: Comply with requirements specified in Division 01 Section "Project Management and Coordination."

J. Qualification Data: Prepare written information that demonstrates capabilities and experience of firm or person. Include lists of completed projects with project names and addresses, contact information of architects and owners, and other information specified.

K. Welding Certificates: Prepare written certification that welding procedures and personnel comply with requirements in the Contract Documents. Submit record of Welding Procedure Specification and Procedure Qualification Record on American Welding Society (AWS) forms. Include names of firms and personnel certified.

L. Installer Certificates: Submit written statements on manufacturer's letterhead certifying that Installer complies with requirements in the Contract Documents and, where required, is authorized by manufacturer for this specific Project.

M. Manufacturer Certificates: Submit written statements on manufacturer's letterhead certifying that manufacturer complies with requirements in the Contract Documents. Include evidence of manufacturing experience where required.

N. Product Certificates: Submit written statements on manufacturer's letterhead certifying that product complies with requirements in the Contract Documents.

O. Material Certificates: Submit written statements on manufacturer's letterhead certifying that material complies with requirements in the Contract Documents.

P. Material Test Reports: Submit reports written by a qualified testing agency, on testing agency's standard form, indicating and interpreting test results of material for compliance with requirements in the Contract Documents.

Q. Product Test Reports: Submit written reports indicating current product produced by manufacturer complies with requirements in the Contract Documents. Base reports on evaluation of tests performed by manufacturer and witnessed by a qualified testing agency, or on comprehensive tests performed by a qualified testing agency.

R. Research Reports: Submit written evidence, from a model code organization acceptable to authorities having jurisdiction, that product complies with building code in effect for Project.

S. Schedule of Tests and Inspections: Comply with requirements specified in Division 01 Section "Quality Requirements."

T. Preconstruction Test Reports: Submit reports written by a qualified testing agency, on testing agency's standard form, indicating and interpreting results of tests performed before installation of product, for compliance with performance requirements in the Contract Documents.

U. Compatibility Test Reports: Submit reports written by a qualified testing agency, on testing agency's standard form, indicating and interpreting results of compatibility tests performed before installation of product. Include written recommendations for primers and substrate preparation needed for adhesion.

V. Field Test Reports: Submit reports indicating and interpreting results of field tests performed either during installation of product or after product is installed in its final location, for compliance with requirements in the Contract Documents.

W. Closeout Submittals and Maintenance Material Submittals: Comply with requirements specified in Division 01 Section "Closeout Procedures."

X. Maintenance Data: Comply with requirements specified in Division 01 Section "Operation and Maintenance Data."

Y. Design Data: Prepare and submit written and graphic information, including, but not limited to, performance and design criteria, list of applicable codes and regulations, and calculations. Include list of assumptions and other performance and design criteria and a summary of loads. Include load diagrams if applicable. Provide name and version of software, if any, used for calculations. Include page numbers.

2.02 DELEGATED-DESIGN SERVICES

A. Performance and Design Criteria: Where professional design services or certifications by a design professional are specifically required of Contractor by the Contract Documents, provide products and systems complying with specific performance and design criteria indicated.

1. If criteria indicated are not sufficient to perform services or certification required, submit a written request for additional information to Architect.

B. Delegated-Design Services Certification: In addition to Shop Drawings, Product Data, and other required submittals, submit digitally-signed PDF electronic file and three paper copies of certificate, signed and sealed by the responsible design professional licensed in the state where the project is located, for each product and system specifically assigned to Contractor to be designed or certified by a design professional.

1. Indicate that products and systems comply with performance and design criteria in the Contract Documents. Include list of codes, loads, and other factors used in performing these services.

PART 3 - EXECUTION

3.01 CONTRACTOR'S REVIEW

A. Action and Informational Submittals: Review each submittal and check for coordination with other Work of the Contract and for compliance with the Contract Documents. Note corrections and field dimensions. Mark with approval stamp before submitting to Architect.

B. Project Closeout and Maintenance/Material Submittals: Refer to requirements in Division 01 Section “Closeout Procedures.”

C. Approval Stamp: Stamp each submittal with a uniform, approval stamp. Include Project name and location, submittal number, Specification Section title and number, name of reviewer, date of Contractor's approval, and statement certifying that submittal has been reviewed, checked, and approved for compliance with the Contract Documents.

3.02 ARCHITECT'S ACTION

A. General: Architect will not review submittals that do not bear Contractor's approval stamp and will return them without action.

B. Action Submittals: Architect will review each submittal, make marks to indicate corrections or modifications required, and return it. Architect will stamp each submittal with an action stamp and will mark stamp appropriately to indicate action.

C. Informational Submittals: Architect will review each submittal and will not return it, or will return it if it does not comply with requirements. Architect will forward each submittal to appropriate party.

D. Incomplete submittals are not acceptable, will be considered nonresponsive, and will be returned without review.

E. Submittals not required by the Contract Documents may not be reviewed and may be discarded.

END OF SECTION

SECTION 01 40 00
QUALITY REQUIREMENTS

PART 1 - GENERAL

1.01 SUMMARY

A. Section includes administrative and procedural requirements for quality assurance and quality control.

B. Testing and inspecting services are required to verify compliance with requirements specified or indicated. These services do not relieve Contractor of responsibility for compliance with the Contract Document requirements.

1. Specified tests, inspections, and related actions do not limit Contractor's other quality-assurance and -control procedures that facilitate compliance with the Contract Document requirements.
2. Requirements for Contractor to provide quality-assurance and -control services required by Architect, Owner, or authorities having jurisdiction are not limited by provisions of this Section.

C. Related Sections include:

1. Division 01 Section “Mockups” for integrated exterior mockups required for the exterior envelope.
2. Divisions 02 through 49 Sections for specific test and inspection requirements.

1.02 DEFINITIONS

A. Quality-Assurance Services: Activities, actions, and procedures performed before and during execution of the Work to guard against defects and deficiencies and substantiate that proposed construction will comply with requirements.

B. Quality-Control Services: Tests, inspections, procedures, and related actions during and after execution of the Work to evaluate that actual products incorporated into the Work and completed construction comply with requirements. Services do not include contract enforcement activities performed by Architect.

C. Mockups: Full size physical assemblies that are constructed on-site. Mockups are constructed to verify selections made under sample submittals; to demonstrate aesthetic effects and, where indicated, qualities of materials and execution; to review coordination, testing, or operation; to show interface between dissimilar materials; and to demonstrate compliance with specified installation tolerances. Mockups are not Samples. Unless otherwise indicated, approved mockups establish the standard by which the Work will be judged.

a. Laboratory Mockups: Full-size physical assemblies constructed and tested at testing facility to verify performance characteristics.

b. Integrated Exterior Mockups: Mockups of the exterior envelope constructed on-site as freestanding temporary built elements, consisting of multiple products, assemblies, and subassemblies.
c. Refer to Division 01 Section “Mockups” for specific requirements related to integrated exterior mockups.

D. Preconstruction Testing: Tests and inspections performed specifically for the Project before products and materials are incorporated into the Work to verify performance or compliance with specified criteria.

E. Product Testing: Tests and inspections that are performed by an NRTL, an NVLAP, or a testing agency qualified to conduct product testing and acceptable to authorities having jurisdiction, to establish product performance and compliance with specified requirements.

F. Source Quality-Control Testing: Tests and inspections that are performed at the source, i.e., plant, mill, factory, or shop.

G. Field Quality-Control Testing: Tests and inspections that are performed on-site for installation of the Work and for completed Work.

H. Testing Agency: An entity engaged to perform specific tests, inspections, or both. Testing laboratory shall mean the same as testing agency.

I. Installer/Applicator/Erector: Contractor or another entity engaged by Contractor as an employee, Subcontractor, or Sub-subcontractor, to perform a particular construction operation, including installation, erection, application, and similar operations.

1. Use of trade-specific terminology in referring to a trade or entity does not require that certain construction activities be performed by accredited or unionized individuals, or that requirements specified apply exclusively to specific trade or trades.

J. Experienced: When used with an entity or individual, “experienced” means having successfully completed a minimum of five previous projects similar in nature, size, and extent to this Project; being familiar with special requirements indicated; and having complied with requirements of authorities having jurisdiction.

1.03 DELEGATED-DESIGN SERVICES

A. Performance and Design Criteria: Where professional design services or certifications by a design professional are specifically required of Contractor by the Contract Documents, provide products and systems complying with specific performance and design criteria indicated.

1. If criteria indicated are not sufficient to perform services or certification required, submit a written request for additional information to Architect.

1.04 CONFLICTING REQUIREMENTS

A. Referenced Standards: If compliance with two or more standards is specified and the standards establish different or conflicting requirements for minimum quantities or quality levels, comply with the most stringent requirement. Refer conflicting requirements that are different, but apparently equal, to Architect for a decision before proceeding.

B. Minimum Quantity or Quality Levels: The quantity or quality level shown or specified shall be the minimum provided or performed. The actual installation may comply exactly with the minimum quantity or quality specified, or it may exceed the minimum within reasonable limits. To comply with these requirements, indicated numeric values are minimum or maximum, as appropriate, for the context of requirements. Refer uncertainties to Architect for a decision before proceeding.

1.05 ACTION SUBMITTALS

A. Shop Drawings: For integrated exterior mockups.

1. Include plans, sections, and elevations, indicating materials and size of mockup construction.
2. Indicate manufacturer and model number of individual components.
3. Provide axonometric drawings for conditions difficult to illustrate in two dimensions.

B. Delegated-Design Services Submittal: In addition to Shop Drawings, Product Data, and other required submittals, submit a statement signed and sealed by the responsible design professional, for each product and system specifically assigned to Contractor to be designed or certified by a design professional, indicating that the products and systems are in compliance with performance and design criteria indicated. Include list of codes, loads, and other factors used in performing these services.

1.06 INFORMATIONAL SUBMITTALS

A. Contractor's Statement of Responsibility: When required by authorities having jurisdiction, submit copy of written statement of responsibility sent to authorities having jurisdiction before starting work on the following systems.

1. Main wind-force resisting system or a wind-resisting component listed in the wind-force-resisting system quality assurance plan prepared by the Architect.

B. Testing Agency Qualifications: For testing agencies specified in “Quality Assurance” Article to demonstrate their capabilities and experience. Include proof of qualifications in the form of a recent report on the inspection of the testing agency by a recognized authority.

C. Schedule of Tests and Inspections: Prepare in tabular form and include the following:

1. Specification Section number and title.
2. Entity responsible for performing tests and inspections.
3. Description of test and inspection.
4. Identification of applicable standards.
5. Identification of test and inspection methods.
6. Number of tests and inspections required.
7. Time schedule or time span for tests and inspections.
8. Requirements for obtaining samples.

9. Unique characteristics of each quality-control service.

D. Reports: Prepare and submit certified written reports and documents as specified.

E. Permits, Licenses, and Certificates: For Owner's record, submit copies of permits, licenses, certifications, inspection reports, releases, jurisdictional settlements, notices, receipts for fee payments, judgments, correspondence, records, and similar documents established for compliance with standards and regulations bearing on performance of the Work.

1.07 CONTRACTOR'S QUALITY-CONTROL PLAN

A. Quality-Control Plan, General: Submit quality-control plan within 10 days of Notice to Proceed, and not less than five days prior to preconstruction conference. Submit in format acceptable to Architect. Identify personnel, procedures, controls, instructions, tests, records, and forms to be used to carry out Contractor's quality-assurance and quality-control responsibilities. Coordinate with Contractor's Construction Schedule.

B. Quality-Control Personnel Qualifications: Engage qualified personnel trained and experienced in managing and executing quality-assurance and quality-control procedures similar in nature and extent to those required for Project.

C. Submittal Procedure: Describe procedures for ensuring compliance with requirements through review and management of submittal process. Indicate qualifications of personnel responsible for submittal review.

D. Testing and Inspection: In quality-control plan, include a comprehensive schedule of Work requiring testing or inspection, including the following:

1. Contractor-performed tests and inspections including Subcontractor-performed tests and inspections. Include required tests and inspections and Contractor-elected tests and inspections. Distinguish source quality-control tests and inspections from field quality-control tests and inspections.
2. Special inspections required by authorities having jurisdiction and indicated on the Statement of Special Inspections.

E. Continuous Inspection of Workmanship: Describe process for continuous inspection during construction to identify and correct deficiencies in workmanship in addition to testing and inspection specified. Indicate types of corrective actions to be required to bring work into compliance with standards of workmanship established by Contract requirements and approved mockups.

F. Monitoring and Documentation: Maintain testing and inspection reports including log of approved and rejected results. Include work Architect has indicated as nonconforming or defective. Indicate corrective actions taken to bring nonconforming work into compliance with requirements. Comply with requirements of authorities having jurisdiction.

1.08 REPORTS AND DOCUMENTS

A. Test and Inspection Reports: Prepare and submit certified written reports specified in other Sections. Include the following:

1. Date of issue.
2. Project title and number.
3. Name, address, and telephone number of testing agency.
4. Dates and locations of samples and tests or inspections.
5. Names of individuals making tests and inspections.
6. Description of the Work and test and inspection method.
7. Identification of product and Specification Section.
8. Complete test or inspection data.
9. Test and inspection results and an interpretation of test results.
10. Record of temperature and weather conditions at time of sample taking and testing and inspecting.
11. Comments or professional opinion on whether tested or inspected Work complies with the Contract Document requirements.
12. Name and signature of laboratory inspector.
13. Recommendations on retesting and reinspecting.

B. Manufacturer's Technical Representative's Field Reports: Prepare written information documenting tests and inspections specified in other Sections. Include the following:

1. Name, address, and telephone number of representative making report.
2. Statement on condition of substrates and their acceptability for installation of product.
3. Summary of installation procedures being followed, whether they comply with requirements and, if not, what corrective action was taken.
4. Results of operational and other tests and a statement of whether observed performance complies with requirements.
5. Other required items indicated in individual Specification Sections.

1.09 QUALITY ASSURANCE

A. General: Qualifications paragraphs in this article establish the minimum qualification levels required; individual Specification Sections specify additional requirements.

B. Manufacturer Qualifications: A firm experienced in manufacturing products or systems similar to those indicated for this Project and with a record of successful in-service performance, as well as sufficient production capacity to produce required units.

C. Fabricator Qualifications: A firm experienced in producing products similar to those indicated for this Project and with a record of successful in-service performance, as well as sufficient production capacity to produce required units.

D. Installer Qualifications: A firm or individual experienced in installing, erecting, or assembling work similar in material, design, and extent to that indicated for this Project, whose work has resulted in construction with a record of successful in-service performance.

E. Professional Engineer Qualifications: A professional engineer who is legally qualified to practice in jurisdiction where Project is located and who is experienced in providing engineering services of the kind indicated. Engineering services are defined as those performed for installations of the system, assembly, or product that are similar to those indicated for this Project in material, design, and extent.

F. Specialists: Certain Specification Sections require that specific construction activities shall be performed by entities who are recognized experts in those operations. Specialists shall satisfy qualification requirements indicated and shall be engaged for the activities indicated.

1. Requirements of authorities having jurisdiction shall supersede requirements for specialists.

G. Testing Agency Qualifications: An NRTL, an NVLAP, or an independent agency with the experience and capability to conduct testing and inspecting indicated, as documented according to ASTM E 329; and with additional qualifications specified in individual Sections; and where required by authorities having jurisdiction, that is acceptable to authorities.

1. NRTL: A nationally recognized testing laboratory according to 29 CFR 1910.7.
2. NVLAP: A testing agency accredited according to NIST's National Voluntary Laboratory Accreditation Program.

H. Manufacturer's Representative Qualifications: An authorized representative of manufacturer who is trained and approved by manufacturer to observe and inspect installation of manufacturer's products that are similar in material, design, and extent to those indicated for this Project.

I. Mockups: Before installing portions of the Work requiring mockups, build mockups for each form of construction and finish required to comply with the following requirements, using materials indicated for the completed Work:

1. Build mockups in location and of size indicated or, if not indicated, as directed by Architect.
2. Notify Architect seven days in advance of dates and times when mockups will be constructed.
3. Employ supervisory personnel who will oversee mockup construction. Employ workers that will be employed to perform same tasks during the construction at Project.
4. Demonstrate the proposed range of aesthetic effects and workmanship.
5. Obtain Architect's approval of mockups before starting work, fabrication, or construction.

    a. Allow seven days for initial review and each re-review of each mockup.

6. Maintain mockups during construction in an undisturbed condition as a standard for judging the completed Work.
7. Demolish and remove mockups when directed, unless otherwise indicated.

J. Integrated Exterior Mockups: Comply with requirements in Division 01 Section “Mockups.”

1.10 QUALITY CONTROL

A. Owner Responsibilities: Where quality-control services are indicated as Owner's responsibility, Owner will engage a qualified testing agency to perform these services.

1. Owner will furnish Contractor with names, addresses, and telephone numbers of testing agencies engaged and a description of types of testing and inspecting they are engaged to perform.
2. Costs for retesting and reinspecting construction that replaces or is necessitated by work that failed to comply with the Contract Documents will be charged to Contractor, and the Contract Sum will be adjusted by Change Order.

B. Contractor Responsibilities: Tests and inspections not explicitly assigned to Owner are Contractor's responsibility. Perform additional quality-control activities, whether specified or not, to verify and document that the Work complies with requirements.

1. Unless otherwise indicated, provide quality-control services specified and those required by authorities having jurisdiction. Perform quality-control services required of Contractor by authorities having jurisdiction, whether specified or not.
2. Where services are indicated as Contractor's responsibility, engage a qualified testing agency to perform these quality-control services.

   a. Contractor shall not employ same entity engaged by Owner, unless agreed to in writing by Owner.

3. Notify testing agencies at least 24 hours in advance of time when Work that requires testing or inspecting will be performed.
4. Where quality-control services are indicated as Contractor's responsibility, submit a certified written report, in duplicate, of each quality-control service.
5. Testing and inspecting requested by Contractor and not required by the Contract Documents are Contractor's responsibility.
6. Submit additional copies of each written report directly to authorities having jurisdiction, when they so direct.

C. Manufacturer's Field Services: Where indicated, engage a manufacturer's representative to observe and inspect the Work. Manufacturer's representative's services include examination of substrates and conditions, verification of materials, inspection of completed portions of the Work, and submittal of written reports.

D. Retesting/Reinspecting: Regardless of whether original tests or inspections were Contractor's responsibility, provide quality-control services, including retesting and reinspecting, for construction that replaced Work that failed to comply with the Contract Documents.

E. Testing Agency Responsibilities: Cooperate with Architect and Contractor in performance of duties. Provide qualified personnel to perform required tests and inspections.

1. Notify Architect and Contractor promptly of irregularities or deficiencies observed in the Work during performance of its services.
2. Determine the location from which test samples will be taken and in which in-situ tests are conducted.

3. Conduct and interpret tests and inspections and state in each report whether tested and inspected work complies with or deviates from requirements.
4. Submit a certified written report, in duplicate, of each test, inspection, and similar quality-control service through Contractor.
5. Do not release, revoke, alter, or increase the Contract Document requirements or approve or accept any portion of the Work.
6. Do not perform any duties of Contractor.

F. Associated Services: Cooperate with agencies performing required tests, inspections, and similar quality-control services, and provide reasonable auxiliary services as requested. Notify agency sufficiently in advance of operations to permit assignment of personnel. Provide the following:

1. Access to the Work.
2. Incidental labor and facilities necessary to facilitate tests and inspections.
3. Adequate quantities of representative samples of materials that require testing and inspecting. Assist agency in obtaining samples.
4. Facilities for storage and field curing of test samples.
5. Delivery of samples to testing agencies.
6. Preliminary design mix proposed for use for material mixes that require control by testing agency.
7. Security and protection for samples and for testing and inspecting equipment at Project site.

G. Coordination: Coordinate sequence of activities to accommodate required quality-assurance and -control services with a minimum of delay and to avoid necessity of removing and replacing construction to accommodate testing and inspecting.

1. Schedule times for tests, inspections, obtaining samples, and similar activities.

H. Schedule of Tests and Inspections: Prepare a schedule of tests, inspections, and similar quality-control services required by the Contract Documents as a component of Contractor's quality-control plan. Coordinate and submit concurrently with Contractor's Construction Schedule. Update as the Work progresses.

1. Distribution: Distribute schedule to Owner, Architect, testing agencies, and each party involved in performance of portions of the Work where tests and inspections are required.

1.11 SPECIAL TESTS AND INSPECTIONS

A. Special Tests and Inspections: Except as otherwise indicated, Owner will engage a qualified testing agency to conduct special tests and inspections required by authorities having jurisdiction as the responsibility of Owner, and as follows:

1. Verifying that manufacturer maintains detailed fabrication and quality-control procedures and reviewing the completeness and adequacy of those procedures to perform the Work.
2. Notifying Architect and Contractor promptly of irregularities and deficiencies observed in the Work during performance of its services.

3. Submitting a certified written report of each test, inspection, and similar quality-control service to Architect with copy to Contractor and to authorities having jurisdiction.
4. Submitting a final report of special tests and inspections at Substantial Completion, which includes a list of unresolved deficiencies.
5. Interpreting tests and inspections and stating in each report whether tested and inspected work complies with or deviates from the Contract Documents.
6. Retesting and reinspecting corrected work.

PART 2 - PRODUCTS (NOT APPLICABLE)

PART 3 - EXECUTION

3.01 REPAIR AND PROTECTION

A. General: On completion of testing, inspecting, sample taking, and similar services, repair damaged construction and restore substrates and finishes.

1. Provide materials and comply with installation requirements specified in other Specification Sections or matching existing substrates and finishes. Restore patched areas and extend restoration into adjoining areas with durable seams that are as invisible as possible. Comply with the Contract Document requirements for cutting and patching in Division 01 Section “Execution.”

B. Protect construction exposed by or for quality-control service activities.

C. Repair and protection are Contractor's responsibility, regardless of the assignment of responsibility for quality-control services.

END OF SECTION

SECTION 01 42 00
REFERENCES

PART 1 - GENERAL

1.01 DEFINITIONS

A. General: Basic Contract definitions are included in the Conditions of the Contract.

B. “Approved”: When used to convey Architect's action on Contractor's submittals, applications, and requests, “approved” is limited to Architect's duties and responsibilities as stated in the Conditions of the Contract.

C. “Directed”: A command or instruction by Architect. Other terms including “requested,” “authorized,” “selected,” “required,” and “permitted” have the same meaning as “directed.”

D. “Indicated”: Requirements expressed by graphic representations or in written form on Drawings, in Specifications, and in other Contract Documents. Other terms including “shown,” “noted,” “scheduled,” and “specified” have the same meaning as “indicated.”

E. “Regulations”: Laws, ordinances, statutes, and lawful orders issued by authorities having jurisdiction, and rules, conventions, and agreements within the construction industry that control performance of the Work.

F. “Furnish”: Supply and deliver to Project site, ready for unloading, unpacking, assembly, installation, and similar operations.

G. “Install”: Operations at Project site including unloading, temporarily storing, unpacking, assembling, erecting, placing, anchoring, applying, working to dimension, finishing, curing, protecting, cleaning, and similar operations.

H. “Provide”: Furnish and install, complete and ready for the intended use.

I. “Project Site”: Space available for performing construction activities. The extent of Project site is shown on Drawings and may or may not be identical with the description of the land on which Project is to be built.

1.02 INDUSTRY STANDARDS

A. Applicability of Standards: Unless the Contract Documents include more stringent requirements, applicable construction industry standards have the same force and effect as if bound or copied directly into the Contract Documents to the extent referenced. Such standards are made a part of the Contract Documents by reference.

B. Publication Dates: Comply with standards in effect as of date of the Contract Documents unless otherwise indicated.

C. Copies of Standards: Each entity engaged in construction on Project should be familiar with industry standards applicable to its construction activity. Copies of applicable standards are not bound with the Contract Documents.

1. Where copies of standards are needed to perform a required construction activity, obtain copies directly from publication source.

1.03 ABBREVIATIONS AND ACRONYMS

A. Industry Organizations: Where abbreviations and acronyms are used in Specifications or other Contract Documents, they shall mean the recognized name of the entities indicated in Thomson Gale's "Encyclopedia of Associations" or in Columbia Books' "National Trade & Professional Associations of the U.S."

B. Code Agencies: Where abbreviations and acronyms are used in Specifications or other Contract Documents, they shall mean the recognized name of the entities in the following list.

1. IAPMO - International Association of Plumbing and Mechanical Officials; www.iapmo.org.
2. ICC - International Code Council; www.iccsafe.org.
3. ICC-ES - ICC Evaluation Service, LLC; www.icc-es.org.

C. Federal Government Agencies: Where abbreviations and acronyms are used in Specifications or other Contract Documents, they shall mean the recognized name of the entities in the following list.

1. COE - Army Corps of Engineers; www.usace.army.mil.
2. CPSC - Consumer Product Safety Commission; www.cpsc.gov.
3. DOC - Department of Commerce; National Institute of Standards and Technology; www.nist.gov.
4. DOD - Department of Defense; www.quicksearch.dla.mil.
5. DOE - Department of Energy; www.energy.gov.
6. EPA - Environmental Protection Agency; www.epa.gov.
7. FAA - Federal Aviation Administration; www.faa.gov.
8. FG - Federal Government Publications; www.gpo.gov/fdsys.
9. GSA - General Services Administration; www.gsa.gov.
10. HUD - Department of Housing and Urban Development; www.hud.gov.
11. LBL - Lawrence Berkeley National Laboratory; Environmental Energy Technologies Division; www.eetd.lbl.gov.
12. OSHA - Occupational Safety & Health Administration; www.osha.gov.
13. SD - Department of State; www.state.gov.
14. TRB - Transportation Research Board; National Cooperative Highway Research Program; The National Academies; www.trb.org.
15. USDA - Department of Agriculture; Agriculture Research Service; U.S. Salinity Laboratory; www.ars.usda.gov.
16. USDA - Department of Agriculture; Rural Utilities Service; www.usda.gov.
17. USDOJ - Department of Justice; Office of Justice Programs; National Institute of Justice; www.ojp.usdoj.gov.
18. USP - U.S. Pharmacopeial Convention; www.usp.org.
19. USPS - United States Postal Service; www.usps.com.

D. Standards and Regulations: Where abbreviations and acronyms are used in Specifications or other Contract Documents, they shall mean the recognized name of the standards and regulations in the following list.

1. CFR - Code of Federal Regulations; Available from Government Printing Office; www.gpo.gov/fdsys.
2. DOD - Department of Defense; Military Specifications and Standards; Available from DLA Document Services; www.quicksearch.dla.mil.
3. DSCC - Defense Supply Center Columbus; (See FS).
4. FED-STD - Federal Standard; (See FS).
5. FS - Federal Specification; Available from DLA Document Services; www.quicksearch.dla.mil.

   a. Available from Defense Standardization Program; www.dsp.dla.mil.
   b. Available from General Services Administration; www.gsa.gov.
   c. Available from National Institute of Building Sciences/Whole Building Design Guide; www.wbdg.org.

6. MILSPEC - Military Specification and Standards; (See DOD).

E. State Government Agencies: Where abbreviations and acronyms are used in Specifications or other Contract Documents, they shall mean the recognized name of the entities in the following list.

1. CBHF; State of California; Department of Consumer Affairs; Bureau of Electronic and Appliance Repair, Home Furnishings and Thermal Insulation; www.bearhfti.ca.gov.
2. CCR; California Code of Regulations; Office of Administrative Law; California Title 24 Energy Code; www.calregs.com.
3. CDHS; California Department of Health Services; (See CDPH).
4. CDPH; California Department of Public Health; Indoor Air Quality Program; www.cal-iaq.org.
5. CPUC; California Public Utilities Commission; www.cpuc.ca.gov.
6. SCAQMD; South Coast Air Quality Management District; www.aqmd.gov.
7. TAS, Texas Accessibility Standards; http://www.tdlr.texas.gov/ab/abtas.htm.
8. TDLR, Texas Department of Licensing and Regulation; https://www.tdlr.texas.gov/ab/ab.h tm.
9. TFS; Texas A&M Forest Service; Sustainable Forestry and Economic Development; www.txforestservice.tamu.edu.

PART 2 - PRODUCTS (NOT APPLICABLE)

PART 3 - EXECUTION (NOT APPLICABLE)

END OF SECTION

SECTION 01 43 39
MOCKUPS

PART 1 - GENERAL

1.01 SUMMARY

A. Section includes integrated exterior mockup.

B. Related Sections include:

1. Division 01 Section “Quality Requirements” for general requirements governing integrated exterior mockups.
2. Divisions 04 through 09 sections for products to be integrated into integrated exterior mockups.

1.02 DEFINITIONS

A. Integrated Exterior Mockups: Mockups of the exterior envelope erected separately from the building but on Project site, consisting of multiple products, assemblies, and subassemblies.

1.03 PREINSTALLATION MEETINGS

A. Preinstallation Conference: Conduct conference at Project site.

1. For mockups, comply with the following:

a. Meet with Owner, Owner’s Representative, Architect, testing and inspecting agency representative, installers of products to be used in integrated exterior mockup and room mockup, and manufacturer's representative for air barrier, aluminum curtain wall, and storefront products.
b. Review requirements for each product including installation, special details, air- or water leakage, bond testing, protection, and work scheduling that covers integrated exterior mockups.
c. Review coordination of equipment and furnishings provided by the Owner for room mockups.
d. Review locations and extent of mockups.
e. Review testing procedures to be performed on mockups.

1.04 ACTION SUBMITTALS

A. Shop Drawings: Shop Drawings: For integrated exterior, preconstruction laboratory, and room mockups.

1. Include key plan to indicate location of mockups and orientation of face of mockups.

2. Include plans, elevations, sections, and mounting, attachment, and support details.
3. Indicate manufacturer and model number of individual components, subassemblies, and assemblies.
4. Revise and resubmit Shop Drawings to reflect approved modifications in details and component interfaces resulting from changes made during testing procedures.

B. Delegated Design Submittal: For temporary structural supports for mockups not attached to building structure, including analysis data signed and sealed by the qualified professional engineer responsible for their preparation.

1.05 INFORMATIONAL SUBMITTALS

A. List of Materials Used in Constructing Mockups: List generic product names together with manufacturers, manufacturers' product names, model numbers, source of supply, and other information as required to identify materials used.

1. Submittal is for information only. Neither receipt of list nor approval of mockup constitutes approval of deviations from the Contract Documents unless such deviations are specifically brought to the attention of Architect and approved in writing.

B. Product Data: Copies of Product Data for mockup materials indicating review and approval by Architect.

1. Submit approved copies in a single package in electronic PDF format unless otherwise directed. Incomplete submittal packages will not be accepted.

C. Photography Log: List of photographs in thumbnail format with annotations indicating subject and date taken.

1. Included header/footer on each page with name of Project, Owner, and Architect.
2. Format: Electronic PDF format.

1.06 QUALITY ASSURANCE

A. Build mockups to do the following:

1. Verify selections made under Sample submittals.
2. Demonstrate aesthetic effects.
3. Demonstrate the qualities of products and workmanship.
4. Demonstrate acceptable coordination between components and systems.
5. Perform preconstruction testing, such as window air- and water-leakage testing.

B. Fabrication: Before fabricating or installing portions of the Work requiring mockups, build mockups for each form of construction and finish required. Use materials and installation methods as required for the Work.

1. Build mockups of size indicated.
2. Build mockups in location indicated or, if not indicated, as directed by Architect.

3. Employ supervisory personnel who will oversee mockup construction. Employ workers who will be employed to perform same tasks during the construction at Project.
4. Demonstrate the proposed range of aesthetic effects and workmanship.
5. Maintain mockups during construction in an undisturbed condition as a standard for judging the completed Work.
6. Demolish and remove mockups when directed unless otherwise indicated.

C. Notifications:

1. Notify Architect seven days in advance of the dates and times when mockups will be constructed.
2. Notify Architect 14 days in advance of the dates and times when mockups will be tested.
3. Allow seven days for initial review and each re-review of each mockup.

D. Approval: Obtain Architect's approval of mockups before starting fabrication or construction of corresponding Work.

1. Unless otherwise indicated, approved mockups establish the standard by which the Work will be judged.
2. Approval of mockups does not constitute approval of deviations from the Contract Documents contained in mockups unless Architect specifically approves such deviations in writing.

1.07 COORDINATION

A. Coordinate schedule for construction of integrated mockups so that mockups can be reviewed and approved in a timely fashion without impact to the Project schedule.

PART 2 - PRODUCTS

2.01 PERFORMANCE REQUIREMENTS

A. Delegated Design: Engage a qualified professional engineer, as defined in Section 014000 “Quality Requirements,” to design support structure for free-standing mockups.

B. Structural Performance: Wind Loads: As indicated on Drawings.

C. Mockup Testing Performance Requirements: Perform tests using design pressures and performance criteria indicated for assemblies and products that are specified in other Sections and incorporated into integrated exterior mockups.

2.02 INTEGRATED MOCKUPS

A. Construct integrated exterior mockups according to approved mockup Shop Drawings. Construct mockups to demonstrate constructability, coordination of trades, and sequencing of Work; and to ensure materials, components, subassemblies, assemblies, and interfaces integrate into a system complying with indicated performance and aesthetic requirements.

B. Design and construct foundation and superstructure to support free-standing integrated exterior mockups.

C. Build integrated exterior mockups using installers and construction methods that will be used in completed construction.

D. Use specified products which have been reviewed and approved by the Architect.

1. Products to be installed on the exterior integrated mockup include, but are not necessarily limited to the following:
   a. Cold-formed metal framing.
   b. Wood blocking.
   c. Gypsum sheathing.
   d. Insulation including continuous insulation and batt insulation.
   e. Air and weather barriers.
   f. Metal composite material wall panels.
   g. Thermal insulation.
   h. Formed metal flashing, whether shop fabricated or manufactured units, including through-wall flashing, base flashing, counterflashing, and copings.
   i. Flexible through wall flashings.
   j. Joint sealants.
   k. Aluminum-framed openings including storefront, curtainwall, and window units.
   l. Glazing including insulated glazing units, sealants, gaskets, and sealants.
   m. Louvers.
   n. Paint finishes.

E. Photographic Documentation: Document construction of integrated exterior mockups. Provide photographs showing details of interface of different materials and assemblies.

F. Digital Images: Provide images in JPG format, with minimum size of 8 megapixels.

PART 3 - EXECUTION

3.01 ERECTION

A. Construct mockups to confirm product selections made under previous submittals, verify compliance with design intent, and specified requirements, and to confirm the following:

1. Integrated exterior mockup assembly is capable of providing a complete air and water tight facility.
2. Integrated interior assembly is capable of providing a complete and water tight facility.

B. Build mockups as indicated on Drawings and according to approved Shop Drawings. Coordinate installation of exterior envelope materials and products for which mockups are required in individual Specification Sections, along with supporting materials.

1. Provide supplementary framing for exterior mockup as required to support mockup and so that mockup can withstand wind requirements. Do not install supplementary framing in a

way that impairs the visual quality of the mockup face or that interferes with ability of Architect and Owner to review installation of mockup components.

C. Commence erection of mockups only after obtaining Architect's approval of Product Data, Shop Drawings, and Samples for each product to be included in the mockup.

D. Employ supervisory personnel who will oversee mockup construction. Employ workers that will be employed during the construction at Project site.

E. Construct mockups in stages to permit inspection by the Architect or the Owner's testing agency of Work that will be concealed in final assemblies. Where Work is covered before written approval is given by the Architect or the Owner's testing agency, the Contractor will be responsible for removing and reinstalling products without expense to the Owner.

F. Photographs: Take photographs using the maximum range of depth of field, and that are in focus, to clearly show the Work. Photographs with blurry or out-of-focus areas will not be accepted.

1. Maintain key plan with each set of construction photographs that identifies each photographic location.
2. Take photographs as each product is installed clearly showing special techniques or details used.
3. Maintain digital file of photographs in field office for reference by Architect, Owner, and Installer.

G. Review and Approval:

1. Obtain written approval of integrated mockups from Owner and Architect before starting work, fabrication, or construction.

   a. Allow seven days for review and re-review of each product installed.
   b. Allow fourteen days for review of completed mockup.

2. Approval of mockups does not constitute approval of deviations from the Contract Documents contained in mockups unless such deviations are specifically approved by Architect in writing.
3. Maintain integrated exterior mockups during construction in an undisturbed condition as a standard for judging the completed Work.
4. Demolish and remove integrated exterior mockups when directed unless otherwise indicated.

3.02 FIELD QUALITY CONTROL

A. Testing Agency: Owner will engage a qualified testing agency to perform tests and inspections.

END OF SECTION

SECTION 01 50 00
TEMPORARY FACILITIES AND CONTROLS

1.01 SUMMARY

A. Section includes requirements for temporary utilities, support facilities, and security and protection facilities.

B. Related Sections include Division 01 Section “Summary” for work restrictions and limitations on utility interruptions.

1.02 USE CHARGES

A. General: Installation and removal of and use charges for temporary facilities shall be included in the Contract Sum unless otherwise indicated. Allow other entities to use temporary services and facilities without cost, including, but not limited to, Architect, testing agencies, and authorities having jurisdiction.

B. Sewer Service: Pay sewer-service use charges for sewer usage by all entities for construction operations.

C. Water Service: Pay water-service use charges for water used by all entities for construction operations.

D. Electric Power Service: Pay electric-power-service use charges for electricity used by all entities for construction operations.

1.03 INFORMATIONAL SUBMITTALS

A. Site Utilization Plan: Show temporary facilities, utility hookups, staging areas, and parking areas for construction personnel.

B. Implementation and Termination Schedule: Within 15 days of date established for commencement of the Work, submit schedule indicating implementation and termination dates of each temporary utility.

C. Project Identification and Temporary Signs: Show fabrication and installation details, including plans, elevations, details, layouts, typestyles, graphic elements, and message content.

D. Fire-Safety Program: Show compliance with requirements of NFPA 241 and authorities having jurisdiction. Indicate Contractor personnel responsible for management of fire prevention program.

E. Moisture- and Mold-Protection Plan: Describe procedures and controls for protecting materials and construction from water absorption and damage and mold.

1.04 QUALITY ASSURANCE

A. Electric Service: Comply with NECA, NEMA, and UL standards and regulations for temporary electric service. Install service to comply with NFPA 70.

B. Tests and Inspections: Arrange for authorities having jurisdiction to test and inspect each temporary utility before use. Obtain required certifications and permits.

C. Accessible Temporary Egress: Comply with applicable provisions in “Texas Accessibility Standards” (TAS).

1.05 PROJECT CONDITIONS

A. Temporary Use of Permanent Facilities: Engage Installer of each permanent service to assume responsibility for operation, maintenance, and protection of each permanent service during its use as a construction facility before Owner's acceptance, regardless of previously assigned responsibilities.

PART 2 - PRODUCTS

2.01 MATERIALS

A. Chain-Link Fencing: Minimum 2-inch, 0.148-inch-thick, galvanized-steel, chain-link fabric fencing; minimum 6 feet high with galvanized-steel pipe posts; minimum 2-3/8-inch-OD line posts and 2-7/8-inch-OD corner and pull posts, with 1-5/8-inch-OD top rails.

2.02 TEMPORARY FACILITIES

A. Field Offices, General: Prefabricated or mobile units with serviceable finishes, temperature controls, and foundations adequate for normal loading.

B. Common-Use Field Office: Of sufficient size to accommodate needs of Owner, Architect, and construction personnel office activities and to accommodate Project meetings specified in other Division 01 Sections. Keep office clean and orderly.

C. Storage and Fabrication Sheds: Provide sheds sized, furnished, and equipped to accommodate materials and equipment for construction operations.

2.03 EQUIPMENT

A. Fire Extinguishers: Portable, UL rated; with class and extinguishing agent as required by locations and classes of fire exposures.

B. HVAC Equipment: Unless Owner authorizes use of permanent HVAC system, provide vented, self-contained, liquid-propane-gas or fuel-oil heaters with individual space thermostatic control.

1. Use of gasoline-burning space heaters, open-flame heaters, or salamander-type heating units is prohibited.
2. Heating Units: Listed and labeled for type of fuel being consumed, by a qualified testing agency acceptable to authorities having jurisdiction, and marked for intended location and application.
3. Permanent HVAC System: If Owner authorizes use of permanent HVAC system for temporary use during construction, provide filter with MERV of 8 at each return-air grille in system and remove at end of construction and clean HVAC system as required in Division 01 Section “Closeout Procedures”.

PART 3 - EXECUTION

3.01 TEMPORARY FACILITIES, GENERAL

A. Conservation: Coordinate construction and use of temporary facilities with consideration given to conservation of energy, water, and materials. Coordinate use of temporary utilities to minimize waste.

1. Salvage materials and equipment involved in performance of, but not actually incorporated into, the Work. See other Sections for disposition of salvaged materials that are designated as Owner's property.

3.02 INSTALLATION, GENERAL

A. Locate facilities where they will serve Project adequately and result in minimum interference with performance of the Work. Relocate and modify facilities as required by progress of the Work.

B. Provide each facility ready for use when needed to avoid delay. Do not remove until facilities are no longer needed or are replaced by authorized use of completed permanent facilities.

3.03 TEMPORARY UTILITY INSTALLATION

A. General: Install temporary service or connect to existing service.

1. Arrange with utility company, Owner, and existing users for time when service can be interrupted, if necessary, to make connections for temporary services.

B. Sewers and Drainage: Provide temporary utilities to remove effluent lawfully.

C. Water Service: Install water service and distribution piping in sizes and pressures adequate for construction.

D. Sanitary Facilities: Provide temporary toilets, wash facilities, and drinking water for use of construction personnel. Comply with requirements of authorities having jurisdiction for type, number, location, operation, and maintenance of fixtures and facilities.

E. Temporary Heating and Cooling: Provide temporary heating and cooling required by construction activities for curing or drying of completed installations or for protecting installed construction from adverse effects of low temperatures or high humidity. Select equipment that will not have a harmful effect on completed installations or elements being installed.

1. Provide temporary dehumidification systems when required to reduce ambient and substrate moisture levels to level required to allow installation or application of finishes and their proper curing or drying.

F. Ventilation and Humidity Control: Provide temporary ventilation required by construction activities for curing or drying of completed installations or for protecting installed construction from adverse effects of high humidity. Select equipment that will not have a harmful effect on completed installations or elements being installed. Coordinate ventilation requirements to produce ambient condition required and minimize energy consumption.

G. Electric Power Service: Provide electric power service and distribution system of sufficient size, capacity, and power characteristics required for construction operations.

H. Lighting: Provide temporary lighting with local switching that provides adequate illumination for construction operations, observations, inspections, and traffic conditions.

1. Install and operate temporary lighting that fulfills security and protection requirements without operating entire system.

I. Telephone Service: Provide jobsite superintendent with cell phone and distribute cell phone number to Project team for use.

1. At field office, post a list of important telephone numbers in a prominent location. Include the following:

a. Police and fire departments.
b. Ambulance service.
c. Jobsite superintendent’s cell phone.
d. Contractor's home office.
e. Contractor's emergency after-hours telephone number.
f. Architect's office.
g. Engineers' offices.
h. Owner's office.
i. Principal subcontractors' field and home offices.

J. Provide a computer with email and internet access in the field office for use by the Contractor’s field staff.

3.04 SUPPORT FACILITIES INSTALLATION

A. General: Comply with the following:

1. Provide construction for temporary offices, shops, and sheds located within construction area or within 30 feet of building lines that is noncombustible according to ASTM E 136. Comply with NFPA 241.

2. Maintain support facilities until Architect schedules Substantial Completion inspection. Remove before Substantial Completion. Personnel remaining after Substantial Completion will be permitted to use permanent facilities, under conditions acceptable to Owner.

B. Temporary Use of Permanent Roads and Paved Areas: Locate temporary roads and paved areas in same location as permanent roads and paved areas. Construct and maintain temporary roads and paved areas adequate for construction operations. Extend temporary roads and paved areas, within construction limits indicated, as necessary for construction operations.

1. Coordinate elevations of temporary roads and paved areas with permanent roads and paved areas.

C. Traffic Controls: Comply with requirements of authorities having jurisdiction.

1. Protect existing site improvements to remain including curbs, pavement, and utilities.
2. Maintain access for fire-fighting equipment and access to fire hydrants.

D. Parking: Provide temporary parking areas for construction personnel.

E. Dewatering Facilities and Drains: Comply with requirements of authorities having jurisdiction. Maintain Project site, excavations, and construction free of water.

1. Dispose of rainwater in a lawful manner that will not result in flooding Project or adjoining properties or endanger permanent Work or temporary facilities.
2. Remove snow and ice as required to minimize accumulations.

F. Project Signs: Provide Project signs as indicated. Unauthorized signs are not permitted.

1. Identification Signs: Provide Project identification signs as indicated on Drawings.

2. Temporary Signs: Provide other signs as indicated and as required to inform public and individuals seeking entrance to Project.

   a. Provide temporary, directional signs for construction personnel and visitors.

3. Maintain and touchup signs so they are legible at all times.

G. Waste Disposal Facilities: Comply with requirements specified in Division 01 Section "Construction Waste Management and Disposal."

1. Comply with requirements of authorities having jurisdiction.
2. Comply with progress cleaning requirements in Division 01 Section "Execution."

H. Lifts and Hoists: Provide facilities necessary for hoisting materials and personnel.

1. Truck cranes and similar devices used for hoisting materials are considered "tools and equipment" and not temporary facilities.

I. Temporary Stairs: Until permanent stairs are available, provide temporary stairs where ladders are not adequate.

J. Temporary Use of Permanent Stairs: Use of new stairs for construction traffic will be permitted, provided stairs are protected and finishes restored to new condition at time of Substantial Completion.

3.05 SECURITY AND PROTECTION FACILITIES INSTALLATION

A. Protection of Existing Facilities: Protect existing vegetation, equipment, structures, utilities, and other improvements at Project site and on adjacent properties, except those indicated to be removed or altered. Repair damage to existing facilities.

1. Where access to adjacent properties is required in order to affect protection of existing facilities, obtain written permission from adjacent property owner to access property for that purpose.

B. Environmental Protection: Provide protection, operate temporary facilities, and conduct construction as required to comply with environmental regulations and that minimize possible air, waterway, and subsoil contamination or pollution or other undesirable effects.

1. Comply with work restrictions specified in Division 01 Section “Summary.”

C. Temporary Erosion and Sedimentation Control: Provide measures to prevent soil erosion and discharge of soil-bearing water runoff and airborne dust to undisturbed areas and to adjacent properties and walkways, according to requirements of EPA Construction General Permit or authorities having jurisdiction, whichever is more stringent.

1. Verify that flows of water redirected from construction areas or generated by construction activity do not enter or cross tree- or plant-protection zones.
2. Inspect, repair, and maintain erosion- and sedimentation-control measures during construction until permanent vegetation has been established.
3. Clean, repair, and restore adjoining properties and roads affected by erosion and sedimentation from Project site during the course of Project.
4. Remove erosion and sedimentation controls and restore and stabilize areas disturbed during removal.

D. Stormwater Control: Comply with requirements of authorities having jurisdiction. Provide barriers in and around excavations and subgrade construction to prevent flooding by runoff of stormwater from heavy rains.

E. Pest Control: Engage pest-control service to recommend practices to minimize attraction and harboring of rodents, roaches, and other pests and to perform extermination and control procedures at regular intervals so Project will be free of pests and their residues at Substantial Completion. Perform control operations lawfully, using environmentally safe materials.

F. Site Enclosure Fence: Before construction operations begin, furnish and install site enclosure fence in a manner that will prevent people and animals from easily entering site except by entrance gates.

1. Extent of Fence: As required to enclose entire Project site or portion determined sufficient to accommodate construction operations.

2. Maintain security by limiting number of keys and restricting distribution to authorized personnel. Furnish one set of keys to Owner.

G. Security Enclosure and Lockup: Install temporary enclosure around partially completed areas of construction. Provide lockable entrances to prevent unauthorized entrance, vandalism, theft, and similar violations of security. Lock entrances at end of each work day.

H. Barricades, Warning Signs, and Lights: Comply with requirements of authorities having jurisdiction for erecting structurally adequate barricades, including warning signs and lighting.

I. Temporary Enclosures: Provide temporary enclosures for protection of construction, in progress and completed, from exposure, foul weather, other construction operations, and similar activities. Provide temporary weathertight enclosure for building exterior.

1. Where heating or cooling is needed and permanent enclosure is not complete, insulate temporary enclosures.

J. Temporary Fire Protection: Install and maintain temporary fire-protection facilities of types needed to protect against reasonably predictable and controllable fire losses. Comply with NFPA 241; manage fire prevention program.

1. Prohibit smoking in construction areas.
2. Supervise welding operations, combustion-type temporary heating units, and similar sources of fire ignition according to requirements of authorities having jurisdiction.
3. Develop and supervise an overall fire-prevention and -protection program for personnel at Project site. Review needs with local fire department and establish procedures to be followed. Instruct personnel in methods and procedures. Post warnings and information.
4. Provide temporary standpipes and hoses for fire protection. Hang hoses with a warning sign stating that hoses are for fire-protection purposes only and are not to be removed. Match hose size with outlet size and equip with suitable nozzles.

3.06 MOISTURE AND MOLD CONTROL

A. Contractor's Moisture-Protection Plan: Describe delivery, handling, storage, installation, and protection provisions for materials subject to water absorption or water damage.

1. Indicate procedures for discarding water-damaged materials, protocols for mitigating water intrusion into completed Work, and replacing water-damaged Work.
2. Indicate sequencing of work that requires water, such as sprayed fire-resistive materials, plastering, and terrazzo grinding, and describe plans for dealing with water from these operations. Show procedures for verifying that wet construction has dried sufficiently to permit installation of finish materials.
3. Indicate methods to be used to avoid trapping water in finished work.

B. Exposed Construction Period: Before installation of weather barriers, when materials are subject to wetting and exposure and to airborne mold spores, protect as follows:

1. Protect porous materials from water damage.
2. Protect stored and installed material from flowing or standing water.

3. Keep porous and organic materials from coming into prolonged contact with concrete.
4. Remove standing water from decks.
5. Keep deck openings covered or dammed.

C. Partially Enclosed Construction Period: After installation of weather barriers but before full enclosure and conditioning of building, when installed materials are still subject to infiltration of moisture and ambient mold spores, protect as follows:

1. Do not load or install drywall or other porous materials or components, or items with high organic content, into partially enclosed building.
2. Keep interior spaces reasonably clean and protected from water damage.
3. Periodically collect and remove waste containing cellulose or other organic matter.
4. Discard or replace water-damaged material.
5. Do not install material that is wet.
6. Discard and replace stored or installed material that begins to grow mold.
7. Perform work in a sequence that allows wet materials adequate time to dry before enclosing the material in gypsum board or other interior finishes.

D. Controlled Construction Period: After completing and sealing of the building enclosure but prior to the full operation of permanent HVAC systems, maintain as follows:

1. Control moisture and humidity inside building by maintaining effective dry-in conditions.
2. Use temporary or permanent HVAC system to control humidity within ranges specified for installed and stored materials.
3. Comply with manufacturer's written instructions for temperature, relative humidity, and exposure to water limits.

   a. Hygroscopic materials that may support mold growth, including wood and gypsum-based products, that become wet during the course of construction and remain wet for 48 hours are considered defective and require replacing.
   b. Measure moisture content of materials that have been exposed to moisture during construction operations or after installation. Record readings beginning at time of exposure and continuing daily for 48 hours. Identify materials containing moisture levels higher than allowed. Report findings in writing to Architect.
   c. Remove and replace materials that cannot be completely restored to their manufactured moisture level within 48 hours.

3.07 OPERATION, TERMINATION, AND REMOVAL

A. Supervision: Enforce strict discipline in use of temporary facilities. To minimize waste and abuse, limit availability of temporary facilities to essential and intended uses.

B. Maintenance: Maintain facilities in good operating condition until removal.

1. Maintain operation of temporary enclosures, heating, cooling, humidity control, ventilation, and similar facilities on a 24-hour basis where required to achieve indicated results and to avoid possibility of damage.

C. Temporary Facility Changeover: Do not change over from using temporary security and protection facilities to permanent facilities until Substantial Completion.

D. Termination and Removal: Remove each temporary facility when need for its service has ended, when it has been replaced by authorized use of a permanent facility, or no later than Substantial Completion. Complete or, if necessary, restore permanent construction that may have been delayed because of interference with temporary facility. Repair damaged Work, clean exposed surfaces, and replace construction that cannot be satisfactorily repaired.

1. Materials and facilities that constitute temporary facilities are property of Contractor. Owner reserves right to take possession of Project identification signs.
2. Remove temporary roads and paved areas not intended for or acceptable for integration into permanent construction. Where area is intended for landscape development, remove soil and aggregate fill that do not comply with requirements for fill or subsoil. Remove materials contaminated with road oil, asphalt and other petrochemical compounds, and other substances that might impair growth of plant materials or lawns. Repair or replace street paving, curbs, and sidewalks at temporary entrances, as required by authorities having jurisdiction.
3. At Substantial Completion, repair, renovate, and clean permanent facilities used during construction period. Comply with final cleaning requirements specified in Division 01 Section “Closeout Procedures.”

END OF SECTION

SECTION 01 60 00
PRODUCT REQUIREMENTS

PART 1 - GENERAL

1.01 SUMMARY

A. Section includes administrative and procedural requirements for selection of products for use in Project; product delivery, storage, and handling; manufacturers' standard warranties on products; special warranties; and comparable products.

B. Related Sections include Division 01 Section “Substitution Procedures” for requests for substitutions.

1.02 DEFINITIONS

A. Products: Items obtained for incorporating into the Work, whether purchased for Project or taken from previously purchased stock. The term “product” includes the terms “material,” “equipment,” “system,” and terms of similar intent.

1. Named Products: Items identified by manufacturer's product name, including make or model number or other designation shown or listed in manufacturer's published product literature, that is current as of date of the Contract Documents.
2. New Products: Items that have not previously been incorporated into another project or facility. Products salvaged or recycled from other projects are not considered new products.
3. Comparable Product: Product that is demonstrated and approved through submittal process to have the indicated qualities related to type, function, dimension, in-service performance, physical properties, appearance, and other characteristics that equal or exceed those of specified product.

B. Basis-of-Design Product Specification: A specification in which a specific manufacturer's product is named and accompanied by the words “basis-of-design product,” including make or model number or other designation, to establish the significant qualities related to type, function, dimension, in-service performance, physical properties, appearance, and other characteristics for purposes of evaluating comparable products of additional manufacturers named in the specification.

1.03 ACTION SUBMITTALS

A. Comparable Product Requests: Submit request for consideration of each comparable product. Identify product or fabrication or installation method to be replaced. Include Specification Section number and title and Drawing numbers and titles.

1. Architect's Action: If necessary, Architect will request additional information or documentation for evaluation within one week of receipt of a comparable product request.

Architect will notify Contractor of approval or rejection of proposed comparable product request within 15 days of receipt of request, or seven days of receipt of additional information or documentation, whichever is later.

a. Form of Approval: As specified in Division 01 Section “Submittal Procedures.”
b. Use product specified if Architect does not issue a decision on use of a comparable product request within time allocated.

B. Basis-of-Design Product Specification Submittal: Comply with requirements in Division 01 Section “Submittal Procedures.” Show compliance with requirements.

1.04 QUALITY ASSURANCE

A. Compatibility of Options: If Contractor is given option of selecting between two or more products for use on Project, select product compatible with products previously selected, even if previously selected products were also options.

1.05 PRODUCT DELIVERY, STORAGE, AND HANDLING

A. Deliver, store, and handle products using means and methods that will prevent damage, deterioration, and loss, including theft and vandalism. Comply with manufacturer's written instructions.

B. Delivery and Handling:

1. Schedule delivery to minimize long-term storage at Project site and to prevent overcrowding of construction spaces.
2. Coordinate delivery with installation time to ensure minimum holding time for items that are flammable, hazardous, easily damaged, or sensitive to deterioration, theft, and other losses.
3. Deliver products to Project site in an undamaged condition in manufacturer's original sealed container or other packaging system, complete with labels and instructions for handling, storing, unpacking, protecting, and installing.
4. Inspect products on delivery to determine compliance with the Contract Documents and to determine that products are undamaged and properly protected.

C. Storage:

1. Store products to allow for inspection and measurement of quantity or counting of units.
2. Store materials in a manner that will not endanger Project structure.
3. Store products that are subject to damage by the elements, under cover in a weathertight enclosure above ground, with ventilation adequate to prevent condensation.
4. Store foam plastic from exposure to sunlight, except to extent necessary for period of installation and concealment.
5. Comply with product manufacturer's written instructions for temperature, humidity, ventilation, and weather-protection requirements for storage.
6. Protect stored products from damage and liquids from freezing.

1.06 PRODUCT WARRANTIES

A. Warranties specified in other Sections shall be in addition to, and run concurrent with, other warranties required by the Contract Documents. Manufacturer's disclaimers and limitations on product warranties do not relieve Contractor of obligations under requirements of the Contract Documents.

1. Manufacturer's Warranty: Written warranty furnished by individual manufacturer for a particular product and specifically endorsed by manufacturer to Owner.
2. Special Warranty: Written warranty required by the Contract Documents to provide specific rights for Owner.

B. Special Warranties: Prepare a written document that contains appropriate terms and identification, ready for execution.

1. Manufacturer's Standard Form: Modified to include Project-specific information and properly executed.
2. Specified Form: When specified forms are included with the Specifications, prepare a written document using indicated form properly executed.
3. Refer to Divisions 02 through 49. Sections for specific content requirements and particular requirements for submitting special warranties.

C. Submittal Time: Comply with requirements in Division 01 Section "Closeout Procedures."

PART 2 - PRODUCTS

2.01 PRODUCT SELECTION PROCEDURES

A. General Product Requirements: Provide products that comply with the Contract Documents, are undamaged and, unless otherwise indicated, are new at time of installation.

1. Provide products complete with accessories, trim, finish, fasteners, and other items needed for a complete installation and indicated use and effect.
2. Standard Products: If available, and unless custom products or nonstandard options are specified, provide standard products of types that have been produced and used successfully in similar situations on other projects.
3. Owner reserves the right to limit selection to products with warranties not in conflict with requirements of the Contract Documents.
4. Where products are accompanied by the term "as selected," Architect will make selection.
5. Descriptive, performance, and reference standard requirements in the Specifications establish salient characteristics of products.

B. Product Selection Procedures:

1. Product: Where Specifications name a single manufacturer and product, provide the named product that complies with requirements. Comparable products or substitutions for Contractor's convenience will not be considered.

2. Manufacturer/Source: Where Specifications name a single manufacturer or source, provide a product by the named manufacturer or source that complies with requirements. Comparable products or substitutions for Contractor's convenience will not be considered.
3. Products:

    a. Restricted List: Where Specifications include a list of names of both manufacturers and products, provide one of the products listed that complies with requirements. Comparable products or substitutions for Contractor's convenience will be considered, unless otherwise indicated.
    b. Nonrestricted List: Where Specifications include a list of names of both available manufacturers and products, provide one of the products listed, or an unnamed product, that complies with requirements. Comply with requirements in “Comparable Products” Article for consideration of an unnamed product.

4. Manufacturers:

    a. Restricted List: Where Specifications include a list of manufacturers' names, provide a product by one of the manufacturers listed that complies with requirements. Comparable products or substitutions for Contractor's convenience will be considered, unless otherwise indicated.
    b. Nonrestricted List: Where Specifications include a list of available manufacturers, provide a product by one of the manufacturers listed, or a product by an unnamed manufacturer, that complies with requirements. Comply with requirements in “Comparable Products” Article for consideration of an unnamed manufacturer's product.

5. Basis-of-Design Product: Where Specifications name a product, or refer to a product indicated on Drawings, and include a list of manufacturers, provide the specified or indicated product or a comparable product by one of the other named manufacturers. Drawings and Specifications indicate sizes, profiles, dimensions, and other characteristics that are based on the product named. Comply with requirements in “Comparable Products” Article for consideration of an unnamed product by one of the other named manufacturers.

C. Visual Matching Specification: Where Specifications require “match Architect's sample”, provide a product that complies with requirements and matches Architect's sample. Architect's decision will be final on whether a proposed product matches.

    1. If no product available within specified category matches and complies with other specified requirements, comply with requirements in Division 01 Section “Substitution Procedures” for proposal of product.

D. Visual Selection Specification: Where Specifications include the phrase “as selected by Architect from manufacturer's full range” or similar phrase, select a product that complies with requirements. Architect will select color, gloss, pattern, density, or texture from manufacturer's product line that includes both standard and premium items.

2.02 COMPARABLE PRODUCTS

A. Conditions for Consideration: Architect will consider Contractor's request for comparable product when the following conditions are satisfied. If the following conditions are not satisfied, Architect may return requests without action, except to record noncompliance with these requirements:

1. Evidence that the proposed product does not require revisions to the Contract Documents, that it is consistent with the Contract Documents and will produce the indicated results, and that it is compatible with other portions of the Work.
2. Detailed comparison of significant qualities of proposed product with those named in the Specifications. Significant qualities include attributes such as performance, weight, size, durability, visual effect, and specific features and requirements indicated.
3. Evidence that proposed product provides specified warranty.
4. List of similar installations for completed projects with project names and addresses and names and addresses of architects and owners, if requested.
5. Samples, if requested.

PART 3 - EXECUTION (NOT APPLICABLE)

END OF SECTION

SECTION 01 73 00
EXECUTION

PART 1 - GENERAL

1.01 SUMMARY

A. Section includes general administrative and procedural requirements governing execution of the Work including, but not limited to, the following:

1. Construction layout.
2. Field engineering and surveying.
3. Installation of the Work.
4. Cutting and patching.
5. Progress cleaning.
6. Starting and adjusting.
7. Protection of installed construction.
8. Correction of the Work.

B. Related Requirements:

1. Division 01 Section “Summary” for limits on use of Project site.
2. Division 01 Section “Closeout Procedures” for submitting final property survey with Project Record Documents, recording of Owner-accepted deviations from indicated lines and levels, and final cleaning.

1.02 INFORMATIONAL SUBMITTALS

A. Certificates: Submit certificate signed by land surveyor certifying that location and elevation of improvements comply with requirements.

B. Final Property Survey: Submit 10 copies showing the Work performed and record survey data.

1.03 QUALITY ASSURANCE

A. Land Surveyor Qualifications: A professional land surveyor who is legally qualified to practice in jurisdiction where Project is located and who is experienced in providing land-surveying services of the kind indicated.

B. Cutting and Patching: Comply with requirements for and limitations on cutting and patching of construction elements.

1. Structural Elements: When cutting and patching structural elements, notify Architect of locations and details of cutting and await directions from Architect before proceeding. Shore, brace, and support structural element during cutting and patching. Do not cut and

patch structural elements in a manner that could change their load-carrying capacity or increase deflection.

2. Operational Elements: Do not cut and patch operating elements and related components in a manner that results in reducing their capacity to perform as intended or that results in increased maintenance or decreased operational life or safety.
3. Other Construction Elements: Do not cut and patch other construction elements or components in a manner that could change their load-carrying capacity, that results in reducing their capacity to perform as intended, or that results in increased maintenance or decreased operational life or safety.
4. Visual Elements: Do not cut and patch construction in a manner that results in visual evidence of cutting and patching. Do not cut and patch exposed construction in a manner that would, in Architect's opinion, reduce the building's aesthetic qualities. Remove and replace construction that has been cut and patched in a visually unsatisfactory manner.

PART 2 - PRODUCTS

2.01 MATERIALS

A. General: Comply with requirements specified in other Sections.

B. In-Place Materials: Use materials for patching identical to in-place materials. For exposed surfaces, use materials that visually match in-place adjacent surfaces to the fullest extent possible.

1. If identical materials are unavailable or cannot be used, use materials that, when installed, will provide a match acceptable to Architect for the visual and functional performance of in-place materials.

PART 3 - EXECUTION

3.01 EXAMINATION

A. Existing Conditions: The existence and location of underground and other utilities and construction indicated as existing are not guaranteed. Before beginning sitework, investigate and verify the existence and location of underground utilities, mechanical and electrical systems, and other construction affecting the Work.

1. Before construction, verify the location and invert elevation at points of connection of sanitary sewer, storm sewer, and water-service piping; underground electrical services, and other utilities.
2. Furnish location data for work related to Project that must be performed by public utilities serving Project site.

B. Examination and Acceptance of Conditions: Before proceeding with each component of the Work, examine substrates, areas, and conditions, with Installer or Applicator present where indicated, for compliance with requirements for installation tolerances and other conditions affecting performance. Record observations.

1. Examine roughing-in for mechanical and electrical systems to verify actual locations of connections before equipment and fixture installation.
2. Examine walls, floors, and roofs for suitable conditions where products and systems are to be installed.
3. Verify compatibility with and suitability of substrates, including compatibility with existing finishes or primers.

C. Proceed with installation only after unsatisfactory conditions have been corrected. Proceeding with the Work indicates acceptance of surfaces and conditions.

3.02 PREPARATION

A. Existing Utility Information: Furnish information to local utility that is necessary to adjust, move, or relocate existing utility structures, utility poles, lines, services, or other utility appurtenances located in or affected by construction. Coordinate with authorities having jurisdiction.

B. Field Measurements: Take field measurements as required to fit the Work properly. Recheck measurements before installing each product. Where portions of the Work are indicated to fit to other construction, verify dimensions of other construction by field measurements before fabrication. Coordinate fabrication schedule with construction progress to avoid delaying the Work.

C. Space Requirements: Verify space requirements and dimensions of items shown diagrammatically on Drawings.

D. Review of Contract Documents and Field Conditions: Immediately on discovery of the need for clarification of the Contract Documents caused by differing field conditions outside the control of Contractor, submit a request for information to Architect according to requirements in Division 01 Section “Project Management and Coordination.”

3.03 CONSTRUCTION LAYOUT

A. Verification: Before proceeding to lay out the Work, verify layout information shown on Drawings, in relation to the property survey and existing benchmarks. If discrepancies are discovered, notify Architect promptly.

B. General: Engage a land surveyor to lay out the Work using accepted surveying practices.

1. Establish benchmarks and control points to set lines and levels at each story of construction and elsewhere as needed to locate each element of Project.
2. Establish limits on use of Project site.
3. Establish dimensions within tolerances indicated. Do not scale Drawings to obtain required dimensions.
4. Inform installers of lines and levels to which they must comply.
5. Check the location, level and plumb, of every major element as the Work progresses.
6. Notify Architect when deviations from required lines and levels exceed allowable tolerances.

7. Close site surveys with an error of closure equal to or less than the standard established by authorities having jurisdiction.

C. Site Improvements: Locate and lay out site improvements, including pavements, grading, fill and topsoil placement, utility slopes, and rim and invert elevations.

D. Building Lines and Levels: Locate and lay out control lines and levels for structures, building foundations, column grids, and floor levels, including those required for mechanical and electrical work. Transfer survey markings and elevations for use with control lines and levels. Level foundations and piers from two or more locations.

E. Record Log: Maintain a log of layout control work. Record deviations from required lines and levels. Include beginning and ending dates and times of surveys, weather conditions, name and duty of each survey party member, and types of instruments and tapes used. Make the log available for reference by Architect.

3.04 FIELD ENGINEERING

A. Reference Points: Locate existing permanent benchmarks, control points, and similar reference points before beginning the Work. Preserve and protect permanent benchmarks and control points during construction operations.

B. Benchmarks: Establish and maintain a minimum of two permanent benchmarks on Project site, referenced to data established by survey control points. Comply with authorities having jurisdiction for type and size of benchmark.

1. Record benchmark locations, with horizontal and vertical data, on Project Record Documents.

C. Final Property Survey: Engage a land surveyor to prepare a final property survey showing significant features (real property) for Project. Include on the survey a certification, signed by land surveyor, that principal metes, bounds, lines, and levels of Project are accurately positioned as shown on the survey.

1. Recording: At Substantial Completion, have the final property survey recorded by or with authorities having jurisdiction as the official “property survey.”

3.05 INSTALLATION

A. General: Locate the Work and components of the Work accurately, in correct alignment and elevation, as indicated.

1. Make vertical work plumb and make horizontal work level.
2. Where space is limited, install components to maximize space available for maintenance and ease of removal for replacement.
3. Conceal pipes, ducts, and wiring in finished areas unless otherwise indicated.

B. Comply with manufacturer's written instructions and recommendations for installing products in applications indicated.

C. Install products at the time and under conditions that will ensure the best possible results. Maintain conditions required for product performance until Substantial Completion.

D. Conduct construction operations so no part of the Work is subjected to damaging operations or loading in excess of that expected during normal conditions of occupancy.

E. Sequence the Work and allow adequate clearances to accommodate movement of construction items on site and placement in permanent locations.

F. Tools and Equipment: Do not use tools or equipment that produce harmful noise levels.

G. Templates: Obtain and distribute to the parties involved templates for work specified to be factory prepared and field installed. Check Shop Drawings of other work to confirm that adequate provisions are made for locating and installing products to comply with indicated requirements.

H. Attachment: Provide blocking and attachment plates and anchors and fasteners of adequate size and number to securely anchor each component in place, accurately located and aligned with other portions of the Work. Where size and type of attachments are not indicated, verify size and type required for load conditions.

1. Mounting Heights: Where mounting heights are not indicated, mount components at heights directed by Architect.
2. Allow for building movement, including thermal expansion and contraction.
3. Coordinate installation of anchorages. Furnish setting drawings, templates, and directions for installing anchorages, including sleeves, concrete inserts, anchor bolts, and items with integral anchors, that are to be embedded in concrete or masonry. Deliver such items to Project site in time for installation.

I. Joints: Make joints of uniform width. Where joint locations in exposed work are not indicated, arrange joints for the best visual effect. Fit exposed connections together to form hairline joints.

J. Hazardous Materials: Use products, cleaners, and installation materials that are not considered hazardous.

3.06 CUTTING AND PATCHING

A. Cutting and Patching, General: Employ skilled workers to perform cutting and patching. Proceed with cutting and patching at the earliest feasible time, and complete without delay.

1. Cut in-place construction to provide for installation of other components or performance of other construction, and subsequently patch as required to restore surfaces to their original condition.

B. Existing Warranties: Remove, replace, patch, and repair materials and surfaces cut or damaged during installation or cutting and patching operations, by methods and with materials so as not to void existing warranties.

C. Temporary Support: Provide temporary support of work to be cut.

D. Protection: Protect in-place construction during cutting and patching to prevent damage. Provide protection from adverse weather conditions for portions of Project that might be exposed during cutting and patching operations.

E. Adjacent Occupied Areas: Avoid interference with use of adjoining areas or interruption of free passage to adjoining areas.

F. Existing Utility Services and Mechanical/Electrical Systems: Where existing services/systems are required to be removed, relocated, or abandoned, bypass such services/systems before cutting to prevent interruption to occupied areas.

G. Cutting: Cut in-place construction by sawing, drilling, breaking, chipping, grinding, and similar operations, including excavation, using methods least likely to damage elements retained or adjoining construction. If possible, review proposed procedures with original Installer; comply with original Installer's written recommendations.

1. In general, use hand or small power tools designed for sawing and grinding, not hammering and chopping. Cut holes and slots neatly to minimum size required, and with minimum disturbance of adjacent surfaces. Temporarily cover openings when not in use.
2. Finished Surfaces: Cut or drill from the exposed or finished side into concealed surfaces.
3. Concrete and Masonry: Cut using a cutting machine, such as an abrasive saw or a diamond-core drill.
4. Excavating and Backfilling: Comply with requirements in applicable Sections where required by cutting and patching operations.
5. Mechanical and Electrical Services: Cut off pipe or conduit in walls or partitions to be removed. Cap, valve, or plug and seal remaining portion of pipe or conduit to prevent entrance of moisture or other foreign matter after cutting.
6. Proceed with patching after construction operations requiring cutting are complete.

H. Patching: Patch construction by filling, repairing, refinishing, closing up, and similar operations following performance of other work. Patch with durable seams that are as invisible as practicable. Provide materials and comply with installation requirements specified in other Sections, where applicable.

1. Inspection: Where feasible, test and inspect patched areas after completion to demonstrate physical integrity of installation.
2. Exposed Finishes: Restore exposed finishes of patched areas and extend finish restoration into retained adjoining construction in a manner that will minimize evidence of patching and refinishing.
3. Floors and Walls: Where walls or partitions that are removed extend one finished area into another, patch and repair floor and wall surfaces in the new space. Provide an even surface of uniform finish, color, texture, and appearance. Remove in-place floor and wall coverings and replace with new materials, if necessary, to achieve uniform color and appearance.
4. Ceilings: Patch, repair, or rehang in-place ceilings as necessary to provide an even-plane surface of uniform appearance.
5. Exterior Building Enclosure: Patch components in a manner that restores enclosure to a weathertight condition and ensures thermal and moisture integrity of building enclosure.

I. Cleaning: Clean areas and spaces where cutting and patching are performed. Remove paint, mortar, oils, putty, and similar materials from adjacent finished surfaces.

3.07 PROGRESS CLEANING

A. General: Clean Project site and work areas daily, including common areas. Enforce requirements strictly. Dispose of materials lawfully.

1. Comply with requirements in NFPA 241 for removal of combustible waste materials and debris.
2. Do not hold waste materials more than seven days during normal weather or three days if the temperature is expected to rise above 80 deg F.
3. Containerize hazardous and unsanitary waste materials separately from other waste. Mark containers appropriately and dispose of legally, according to regulations.

B. Site: Maintain Project site free of waste materials and debris.

C. Work Areas: Clean areas where work is in progress to the level of cleanliness necessary for proper execution of the Work.

1. Remove liquid spills promptly.
2. Where dust would impair proper execution of the Work, broom-clean or vacuum the entire work area, as appropriate.

D. Installed Work: Keep installed work clean. Clean installed surfaces according to written instructions of manufacturer or fabricator of product installed, using only cleaning materials specifically recommended. If specific cleaning materials are not recommended, use cleaning materials that are not hazardous to health or property and that will not damage exposed surfaces.

E. Concealed Spaces: Remove debris from concealed spaces before enclosing the space.

F. Exposed Surfaces in Finished Areas: Clean exposed surfaces and protect as necessary to ensure freedom from damage and deterioration at time of Substantial Completion.

G. Waste Disposal: Do not bury or burn waste materials on-site. Do not wash waste materials down sewers or into waterways.

H. During handling and installation, clean and protect construction in progress and adjoining materials already in place. Apply protective covering where required to ensure protection from damage or deterioration at Substantial Completion.

I. Clean and provide maintenance on completed construction as frequently as necessary through the remainder of the construction period. Adjust and lubricate operable components to ensure operability without damaging effects.

J. Limiting Exposures: Supervise construction operations to assure that no part of the construction, completed or in progress, is subject to harmful, dangerous, damaging, or otherwise deleterious exposure during the construction period.

3.08 STARTING AND ADJUSTING

A. Start equipment and operating components to confirm proper operation. Remove malfunctioning units, replace with new units, and retest.

B. Adjust equipment for proper operation. Adjust operating components for proper operation without binding.

C. Test each piece of equipment to verify proper operation. Test and adjust controls and safeties. Replace damaged and malfunctioning controls and equipment.

D. Manufacturer's Field Service: Comply with qualification requirements in Section 014000 “Quality Requirements”

3.09 PROTECTION OF INSTALLED CONSTRUCTION

A. Provide final protection and maintain conditions that ensure installed Work is without damage or deterioration at time of Substantial Completion.

B. Comply with manufacturer's written instructions for temperature and relative humidity.

END OF SECTION

SECTION 01 77 00
CLOSEOUT PROCEDURES

PART 1 - GENERAL

1.01 SUMMARY

A. Section includes administrative and procedural requirements for contract closeout, including, but not limited to, the following:

1. Substantial Completion procedures.
2. Final completion procedures.
3. Warranties.
4. Final cleaning.

B. Related Sections:

1. Division 01 Section “Operation and Maintenance Data” for operation and maintenance manual requirements.
2. Division 01 Section “Project Record Documents” for submitting Record Drawings, Record Specifications, and Record Product Data.
3. Division 01 Section “Demonstration and Training” for requirements for instructing Owner's personnel.
4. Divisions 02 through 49 Sections for specific closeout and special cleaning requirements for the Work in those Sections.

1.02 ACTION SUBMITTALS

A. Contractor's List of Incomplete Items: Initial submittal at Substantial Completion.

B. Certified List of Incomplete Items: Final submittal at final completion.

1.03 CLOSEOUT SUBMITTALS

A. Certificates of Release: From authorities having jurisdiction.

B. Certificate of Insurance: For continuing coverage.

C. Field Report: For pest control inspection.

1.04 MAINTENANCE MATERIAL SUBMITTALS

A. Schedule of Maintenance Material Items: For maintenance material submittal items specified in other Sections.

1.05 SUBSTANTIAL COMPLETION PROCEDURES

A. Contractor's List of Incomplete Items: Prepare and submit a list of items to be completed and corrected (Contractor's punch list), indicating the value of each item on the list and reasons why the Work is incomplete.

B. Submittals Prior to Substantial Completion: Complete the following a minimum of 10 days prior to requesting inspection for determining date of Substantial Completion. List items below that are incomplete at time of request.

1. Certificates of Release: Obtain and submit releases from authorities having jurisdiction permitting Owner unrestricted use of the Work and access to services and utilities. Include occupancy permits, operating certificates, and similar releases.
2. Submit closeout submittals specified in other Division 01 Sections, including project record documents, operation and maintenance manuals, damage or settlement surveys, property surveys, and similar final record information.
3. Submit closeout submittals specified in individual Sections, including specific warranties, workmanship bonds, maintenance service agreements, final certifications, and similar documents.
4. Submit maintenance material submittals specified in individual Sections, including tools, spare parts, extra materials, and similar items, and deliver to location designated by Architect. Label with manufacturer's name and model number.

   a. Schedule of Maintenance Material Items: Prepare and submit schedule of maintenance material submittal items, including name and quantity of each item and name and number of related Specification Section. Obtain Architect's signature for receipt of submittals.

5. Submit testing, adjusting, and balancing records.
6. Submit changeover information related to Owner's occupancy, use, operation, and maintenance.

C. Procedures Prior to Substantial Completion: Complete the following a minimum of 10 days prior to requesting inspection for determining date of Substantial Completion. List items below that are incomplete at time of request.

1. Advise Owner of pending insurance changeover requirements.
2. Make final changeover of permanent locks and deliver keys to Owner. Advise Owner's personnel of changeover in security provisions.
3. Complete startup and testing of systems and equipment.
4. Perform preventive maintenance on equipment used prior to Substantial Completion.
5. Instruct Owner's personnel in operation, adjustment, and maintenance of products, equipment, and systems. Submit demonstration and training video recordings specified in Division 01 Section “Demonstration and Training.”
6. Advise Owner of changeover in utility services.
7. Participate with Owner in conducting inspection and walkthrough with local emergency responders.
8. Terminate and remove temporary facilities from Project site, along with mockups, construction tools, and similar elements.
9. Complete final cleaning requirements.
10. Touch up paint and otherwise repair and restore marred exposed finishes to eliminate visual defects.

D. Inspection: Submit a written request for inspection to determine Substantial Completion a minimum of 10 days prior to date the Work will be completed and ready for final inspection and tests. On receipt of request, Architect will either proceed with inspection or notify Contractor of unfulfilled requirements. Architect will prepare the Certificate of Substantial Completion after inspection or will notify Contractor of items, either on Contractor's list or additional items identified by Architect, that must be completed or corrected before certificate will be issued.

1. Request reinspection when the Work identified in previous inspections as incomplete is completed or corrected.
2. Results of completed inspection will form the basis of requirements for final completion.

1.06 FINAL COMPLETION PROCEDURES

A. Submittals Prior to Final Completion: Before requesting final inspection for determining final completion, complete the following:

1. Submit a final Application for Payment according to Section 012900 “Payment Procedures.”
2. Certified List of Incomplete Items: Submit certified copy of Architect's Substantial Completion inspection list of items to be completed or corrected (punch list), endorsed and dated by Architect. Certified copy of the list shall state that each item has been completed or otherwise resolved for acceptance.
3. Certificate of Insurance: Submit evidence of final, continuing insurance coverage complying with insurance requirements.
4. Submit pest-control final inspection report.

B. Inspection: Submit a written request for final inspection to determine acceptance a minimum of 10 days prior to date the work will be completed and ready for final inspection and tests. On receipt of request, Architect will either proceed with inspection or notify Contractor of unfulfilled requirements. Architect will prepare a final Certificate for Payment after inspection or will notify Contractor of construction that must be completed or corrected before certificate will be issued.

1. Request reinspection when the Work identified in previous inspections as incomplete is completed or corrected.

C. Accessibility Inspection:

1. Notify Owner when the Project is ready to have an accessibility inspection.
2. Owner will engage a Registered Accessibility Specialist to perform accessibility inspection required by the Texas Department of Licensing and Regulation (TDLR).
3. Coordinate inspection schedule with Owner’s Accessibility Specialist.
4. Correct deficiencies identified in accessibility inspection.
5. Notify the Owner when deficiencies have been corrected.

1.07 LIST OF INCOMPLETE ITEMS (PUNCH LIST)

A. Organization of List: Include name and identification of each space and area affected by construction operations for incomplete items and items needing correction including, if necessary, areas disturbed by Contractor that are outside the limits of construction.

1. Organize list of spaces in sequential order, starting with exterior areas first and proceeding from lowest floor to highest floor.

2. Organize items applying to each space by major element, including categories for ceiling, individual walls, floors, equipment, and building systems.
3. Include the following information at the top of each page:

    a. Project name.
    b. Date.
    c. Name of Architect.
    d. Name of Contractor.
    e. Page number.

4. Submit list of incomplete items in PDF electronic file format. Architect will return annotated file.

1.08 SUBMITTAL OF PROJECT WARRANTIES

A. Time of Submittal: Submit written warranties on request of Architect for designated portions of the Work where warranties are indicated to commence on dates other than date of Substantial Completion, or when delay in submittal of warranties might limit Owner's rights under warranty.

B. Partial Occupancy: Submit properly executed warranties within 15 days of completion of designated portions of the Work that are completed and occupied or used by Owner during construction period by separate agreement with Contractor.

C. Organize warranty documents into an orderly sequence based on the table of contents of Project Manual.

D. Warranty Electronic File: Provide warranties and bonds in PDF format. Assemble complete warranty and bond submittal package into a single electronic PDF file with bookmarks enabling navigation to each item. Provide bookmarked table of contents at beginning of document.

    1. Submit on digital media acceptable to Architect.

E. Warranties in Paper Form:

    1. Bind warranties and bonds in heavy-duty, three-ring, vinyl-covered, loose-leaf binders, thickness as necessary to accommodate contents, and sized to receive 8-1/2-by-11-inch paper.
    2. Provide heavy paper dividers with plastic-covered tabs for each separate warranty. Mark tab to identify the product or installation. Provide a typed description of the product or installation, including the name of the product and the name, address, and telephone number of Installer.
    3. Identify each binder on the front and spine with the typed or printed title "WARRANTIES," Project name, and name of Contractor.

F. Provide additional copies of each warranty to include in operation and maintenance manuals.

PART 2 - PRODUCTS

2.01 MATERIALS

A. Cleaning Agents: Use cleaning materials and agents recommended by manufacturer or fabricator of the surface to be cleaned. Do not use cleaning agents that are potentially hazardous to health or property or that might damage finished surfaces.

PART 3 - EXECUTION

3.01 FINAL CLEANING

A. General: Perform final cleaning. Conduct cleaning and waste-removal operations to comply with local laws and ordinances and Federal and local environmental and antipollution regulations.

B. Cleaning: Employ experienced workers or professional cleaners for final cleaning. Clean each surface or unit to condition expected in an average commercial building cleaning and maintenance program. Comply with manufacturer's written instructions.

1. Complete the following cleaning operations before requesting inspection for certification of Substantial Completion for entire Project or for a portion of Project:

a. Clean Project site, yard, and grounds, in areas disturbed by construction activities, including landscape development areas, of rubbish, waste material, litter, and other foreign substances.
b. Sweep paved areas broom clean. Remove petrochemical spills, stains, and other foreign deposits.
c. Rake grounds that are not planted, mulched, or paved to a smooth, even-textured surface.
d. Remove tools, construction equipment, machinery, and surplus material from Project site.
e. Remove snow and ice to provide safe access to building.
f. Clean exposed exterior and interior hard-surfaced finishes to a dirt-free condition, free of stains, films, and similar foreign substances. Avoid disturbing natural weathering of exterior surfaces. Restore reflective surfaces to their original condition.
g. Remove debris and surface dust from limited access spaces, including roofs, plenums, shafts, trenches, equipment vaults, manholes, attics, and similar spaces.
h. Sweep concrete floors broom clean in unoccupied spaces.
i. Vacuum carpet and similar soft surfaces, removing debris and excess nap; clean according to manufacturer's recommendations if visible soil or stains remain.
j. Clean transparent materials, including mirrors and glass in doors and windows. Remove glazing compounds and other noticeable, vision-obscuring materials. Polish mirrors and glass, taking care not to scratch surfaces.
k. Remove labels that are not permanent.
l. Wipe surfaces of mechanical and electrical equipment, elevator equipment, and similar equipment. Remove excess lubrication, paint and mortar droppings, and other foreign substances.

m. Clean plumbing fixtures to a sanitary condition, free of stains, including stains resulting from water exposure.
n. Replace disposable air filters and clean permanent air filters. Clean exposed surfaces of diffusers, registers, and grills.
o. Clean ducts, blowers, and coils if units were operated without filters during construction or that display contamination with particulate matter on inspection.
p. Clean light fixtures, lamps, globes, and reflectors to function with full efficiency.
q. Leave Project clean and ready for occupancy.

C. Pest Control: Engage an experienced, licensed exterminator to make a final inspection and rid Project of rodents, insects, and other pests. Prepare a report.

D. Construction Waste Disposal: Comply with waste disposal requirements in Division 01 Section “Temporary Facilities and Controls.”

3.02 REPAIR OF THE WORK

A. Complete repair and restoration operations before requesting inspection for determination of Substantial Completion.

B. Repair, or remove and replace, defective construction. Repairing includes replacing defective parts, refinishing damaged surfaces, touching up with matching materials, and properly adjusting operating equipment. Where damaged or worn items cannot be repaired or restored, provide replacements. Remove and replace operating components that cannot be repaired. Restore damaged construction and permanent facilities used during construction to specified condition.

1. Remove and replace chipped, scratched, and broken glass, reflective surfaces, and other damaged transparent materials.
2. Touch up and otherwise repair and restore marred or exposed finishes and surfaces. Replace finishes and surfaces that that already show evidence of repair or restoration.

   a. Do not paint over “UL” and other required labels and identification, including mechanical and electrical nameplates. Remove paint applied to required labels and identification.

3. Replace parts subject to operating conditions during construction that may impede operation or reduce longevity.
4. Replace burned-out bulbs, bulbs noticeably dimmed by hours of use, and defective and noisy starters in fluorescent and mercury vapor fixtures to comply with requirements for new fixtures.

END OF SECTION

SECTION 01 78 23
OPERATION AND MAINTENANCE DATA

PART 1 - GENERAL

1.01 SUMMARY

A. Section includes administrative and procedural requirements for preparing operation and maintenance manuals, including the following:

1. Operation and maintenance documentation directory.
2. Emergency manuals.
3. Operation and maintenance manuals for systems, subsystems, and equipment.
4. Product maintenance manuals.

B. Related Sections include Divisions 02 through 49 Sections for specific operation and maintenance manual requirements for the Work in those Sections.

1.02 CLOSEOUT SUBMITTALS

A. Format: Submit operations and maintenance manuals in the following format:

1. Three paper copies. Include a complete operation and maintenance directory. Enclose title pages and directories in clear plastic sleeves. Architect will return two copies.

B. Manual Submittal: Submit each manual in final form prior to requesting inspection for Substantial Completion and at least 15 days before commencing demonstration and training. Architect will return copy with comments.

1. Correct or modify each manual to comply with Architect's comments. Submit copies of each corrected manual within 15 days of receipt of Architect's comments and prior to commencing demonstration and training.

PART 2 - PRODUCTS

2.01 REQUIREMENTS FOR EMERGENCY, OPERATION, AND MAINTENANCE MANUALS

A. Organization: Unless otherwise indicated, organize each manual into a separate section for each system and subsystem, and a separate section for each piece of equipment not part of a system. Each manual shall contain the following materials, in the order listed:

1. Title page.
2. Table of contents.
3. Manual contents.

B. Title Page: Include the following information:

1. Subject matter included in manual.
2. Name and address of Project.
3. Name and address of Owner.
4. Date of submittal.
5. Name and contact information for Contractor.
6. Name and contact information for Construction Manager.
7. Name and contact information for Architect.
8. Name and contact information for Commissioning Agent.
9. Names and contact information for major consultants to the Architect that designed the systems contained in the manuals.
10. Cross-reference to related systems in other operation and maintenance manuals.

C. Table of Contents: List each product included in manual, identified by product name, indexed to the content of the volume, and cross-referenced to Specification Section number in Project Manual.

D. Manual Contents: Organize into sets of manageable size. Arrange contents alphabetically by system, subsystem, and equipment. If possible, assemble instructions for subsystems, equipment, and components of one system into a single binder.

E. Manuals, Paper Copy: Submit manuals in the form of hard copy, bound and labeled volumes.

1. Binders: Heavy-duty, three-ring, vinyl-covered, loose-leaf binders, in thickness necessary to accommodate contents, sized to hold 8-1/2-by-11-inch paper; with clear plastic sleeve on spine to hold label describing contents and with pockets inside covers to hold folded oversize sheets.

    a. Identify each binder on front and spine, with printed title "OPERATION AND MAINTENANCE MANUAL," Project title or name,and subject matter of contents, and indicate Specification Section number on bottom of spine. Indicate volume number for multiple-volume sets.

2. Dividers: Heavy-paper dividers with plastic-covered tabs for each section of the manual. Mark each tab to indicate contents. Include typed list of products and major components of equipment included in the section on each divider, cross-referenced to Specification Section number and title of Project Manual.
3. Protective Plastic Sleeves: Transparent plastic sleeves designed to enclose diagnostic software storage media for computerized electronic equipment.
4. Drawings: Attach reinforced, punched binder tabs on drawings and bind with text.

    a. If oversize drawings are necessary, fold drawings to same size as text pages and use as foldouts.
    b. If drawings are too large to be used as foldouts, fold and place drawings in labeled envelopes and bind envelopes in rear of manual. At appropriate locations in manual, insert typewritten pages indicating drawing titles, descriptions of contents, and drawing locations.

2.02 EMERGENCY MANUALS

A. Content: Organize manual into a separate section for each of the following:

1. Type of emergency.
2. Emergency instructions.
3. Emergency procedures.

B. Type of Emergency: Where applicable for each type of emergency indicated below, include instructions and procedures for each system, subsystem, piece of equipment, and component:

1. Fire.
2. Flood.
3. Gas leak.
4. Water leak.
5. Power failure.
6. Water outage.
7. System, subsystem, or equipment failure.
8. Chemical release or spill.

C. Emergency Instructions: Describe and explain warnings, trouble indications, error messages, and similar codes and signals. Include responsibilities of Owner's operating personnel for notification of Installer, supplier, and manufacturer to maintain warranties.

D. Emergency Procedures: Include the following, as applicable:

1. Instructions on stopping.
2. Shutdown instructions for each type of emergency.
3. Operating instructions for conditions outside normal operating limits.
4. Required sequences for electric or electronic systems.
5. Special operating instructions and procedures.

2.03 OPERATION MANUALS

A. Content: In addition to requirements in this Section, include operation data required in individual Specification Sections and the following information:

1. System, subsystem, and equipment descriptions. Use designations for systems and equipment indicated on Contract Documents.
2. Performance and design criteria if Contractor is delegated design responsibility.
3. Operating standards.
4. Operating procedures.
5. Operating logs.
6. Wiring diagrams.
7. Control diagrams.
8. Piped system diagrams.
9. Precautions against improper use.
10. License requirements including inspection and renewal dates.

B. Descriptions: Include the following:

1. Product name and model number. Use designations for products indicated on Contract Documents.
2. Manufacturer's name.

3. Equipment identification with serial number of each component.
4. Equipment function.
5. Operating characteristics.
6. Limiting conditions.
7. Performance curves.
8. Engineering data and tests.
9. Complete nomenclature and number of replacement parts.

C. Operating Procedures: Include the following, as applicable:

1. Startup procedures.
2. Equipment or system break-in procedures.
3. Routine and normal operating instructions.
4. Regulation and control procedures.
5. Instructions on stopping.
6. Normal shutdown instructions.
7. Seasonal and weekend operating instructions.
8. Required sequences for electric or electronic systems.
9. Special operating instructions and procedures.

D. Systems and Equipment Controls: Describe the sequence of operation, and diagram controls as installed.

E. Piped Systems: Diagram piping as installed, and identify color-coding where required for identification.

2.04 PRODUCT MAINTENANCE MANUALS

A. Content: Organize manual into a separate section for each product, material, and finish. Include source information, product information, maintenance procedures, repair materials and sources, and warranties and bonds, as described below.

B. Source Information: List each product included in manual, identified by product name and arranged to match manual's table of contents. For each product, list name, address, and telephone number of Installer or supplier and maintenance service agent, and cross-reference Specification Section number and title in Project Manual.

C. Product Information: Include the following, as applicable:

1. Product name and model number.
2. Manufacturer's name.
3. Color, pattern, and texture.
4. Material and chemical composition.
5. Reordering information for specially manufactured products.

D. Maintenance Procedures: Include manufacturer's written recommendations and the following:

1. Inspection procedures.
2. Types of cleaning agents to be used and methods of cleaning.
3. List of cleaning agents and methods of cleaning detrimental to product.

4. Schedule for routine cleaning and maintenance.
5. Repair instructions.

E. Repair Materials and Sources: Include lists of materials and local sources of materials and related services.

F. Warranties and Bonds: Include copies of warranties and bonds and lists of circumstances and conditions that would affect validity of warranties or bonds.

2.05 SYSTEMS AND EQUIPMENT MAINTENANCE MANUALS

A. Content: For each system, subsystem, and piece of equipment not part of a system, include source information, manufacturers' maintenance documentation, maintenance procedures, maintenance and service schedules, spare parts list and source information, maintenance service contracts, and warranty and bond information, as described below.

B. Source Information: List each system, subsystem, and piece of equipment included in manual, identified by product name and arranged to match manual's table of contents. For each product, list name, address, and telephone number of Installer or supplier and maintenance service agent, and cross-reference Specification Section number and title in Project Manual.

C. Manufacturers' Maintenance Documentation: Manufacturers' maintenance documentation including the following information for each component part or piece of equipment:

1. Standard maintenance instructions and bulletins.
2. Drawings, diagrams, and instructions required for maintenance, including disassembly and component removal, replacement, and assembly.
3. Identification and nomenclature of parts and components.
4. List of items recommended to be stocked as spare parts.

D. Maintenance Procedures: Include the following information and items that detail essential maintenance procedures:

1. Test and inspection instructions.
2. Troubleshooting guide.
3. Precautions against improper maintenance.
4. Disassembly; component removal, repair, and replacement; and reassembly instructions.
5. Aligning, adjusting, and checking instructions.
6. Demonstration and training video recording, if available.

E. Maintenance and Service Schedules: Include service and lubrication requirements, list of required lubricants for equipment, and separate schedules for preventive and routine maintenance and service with standard time allotment.

F. Spare Parts List and Source Information: Include lists of replacement and repair parts, with parts identified and cross-referenced to manufacturers' maintenance documentation and local sources of maintenance materials and related services.

G. Maintenance Service Contracts: Include copies of maintenance agreements with name and telephone number of service agent.

H. Warranties and Bonds: Include copies of warranties and bonds and lists of circumstances and conditions that would affect validity of warranties or bonds.

PART 3 - EXECUTION

3.01 MANUAL PREPARATION

A. Emergency Manual: Assemble a complete set of emergency information indicating procedures for use by emergency personnel and by Owner's operating personnel for types of emergencies indicated.

B. Product Maintenance Manual: Assemble a complete set of maintenance data indicating care and maintenance of each product, material, and finish incorporated into the Work.

C. Operation and Maintenance Manuals: Assemble a complete set of operation and maintenance data indicating operation and maintenance of each system, subsystem, and piece of equipment not part of a system.

D. Manufacturers' Data: Where manuals contain manufacturers' standard printed data, include only sheets pertinent to product or component installed. Mark each sheet to identify each product or component incorporated into the Work. If data include more than one item in a tabular format, identify each item using appropriate references from the Contract Documents. Identify data applicable to the Work and delete references to information not applicable.

E. Drawings: Prepare drawings supplementing manufacturers' printed data to illustrate the relationship of component parts of equipment and systems and to illustrate control sequence and flow diagrams. Coordinate these drawings with information contained in record Drawings to ensure correct illustration of completed installation.

1. Do not use original project record documents as part of operation and maintenance manuals.

F. Comply with Division 01 Section “Closeout Procedures” for schedule for submitting operation and maintenance documentation.

END OF SECTION

SECTION 01 78 39
PROJECT RECORD DOCUMENTS

PART 1 - GENERAL

1.01 SUMMARY

A. Section includes administrative and procedural requirements for project record documents, including the following:

1. Record Drawings.
2. Record Product Data.
3. Miscellaneous record submittals.

B. Related Sections include:

1. Division 01 Section “Execution” for final property survey.
2. Division 01 Section “Closeout Procedures” for general closeout procedures.
3. Division 01 Section “Operation and Maintenance Data” for operation and maintenance manual requirements.
4. Divisions 02 through 49 Sections for specific requirements for project record documents of the Work in those Sections.

1.02 CLOSEOUT SUBMITTALS

A. Record Drawings: Submit two sets of marked-up record prints.

B. Record Product Data: Submit one paper copy of each submittal.

C. Miscellaneous Record Submittals: See other Specification Sections for miscellaneous record-keeping requirements and submittals in connection with various construction activities. Submit one paper copy of each submittal

D. Reports: Submit written report weekly indicating items incorporated into project record documents concurrent with progress of the Work, including revisions, concealed conditions, field changes, product selections, and other notations incorporated.

PART 2 - PRODUCTS

2.01 RECORD DRAWINGS

A. Record Prints: Maintain one set of marked-up paper copies of the Contract Drawings and Shop Drawings.

1. Preparation: Mark record prints to show the actual installation where installation varies from that shown originally. Require individual or entity who obtained record data, whether individual or entity is Installer, subcontractor, or similar entity, to provide information for preparation of corresponding marked-up record prints.

    a. Give particular attention to information on concealed elements that would be difficult to identify or measure and record later.
    b. Record data as soon as possible after obtaining it.
    c. Record and check the markup before enclosing concealed installations.

2. Content: Types of items requiring marking include, but are not limited to, the following:

    a. Dimensional changes to Drawings.
    b. Revisions to details shown on Drawings.
    c. Depths of foundations.
    d. Locations and depths of underground utilities.
    e. Revisions to routing of piping and conduits.
    f. Revisions to electrical circuitry.
    g. Actual equipment locations.
    h. Duct size and routing.
    i. Locations of concealed internal utilities.
    j. Changes made by Change Order or Change Directive.
    k. Changes made following Architect's written orders.
    l. Details not on the original Contract Drawings.
    m. Field records for variable and concealed conditions.
    n. Record information on the Work that is shown only schematically.

3. Mark the Contract Drawings and Shop Drawings completely and accurately. Utilize personnel proficient at recording graphic information in production of marked-up record prints.
4. Mark record sets with erasable, red-colored pencil. Use other colors to distinguish between changes for different categories of the Work at same location.
5. Note Construction Change Directive numbers, alternate numbers, Change Order numbers, and similar identification, where applicable.

B. Format: Identify and date each record Drawing; include the designation “PROJECT RECORD DRAWING” in a prominent location.

1. Record Prints: Organize record prints and newly prepared record Drawings into manageable sets. Bind each set with durable paper cover sheets. Include identification on cover sheets.
2. Identification: As follows:

    a. Project name.
    b. Date.
    c. Designation “PROJECT RECORD DRAWINGS.”
    d. Name of Architect.
    e. Name of Contractor.

2.02 RECORD PRODUCT DATA

A. Recording: Maintain one copy of each submittal during the construction period for project record document purposes. Post changes and revisions to project record documents as they occur; do not wait until end of Project.

B. Preparation: Mark Product Data to indicate the actual product installation where installation varies substantially from that indicated in Product Data submittal.

1. Give particular attention to information on concealed products and installations that cannot be readily identified and recorded later.
2. Include significant changes in the product delivered to Project site and changes in manufacturer's written instructions for installation.
3. Note related Change Orders and record Drawings where applicable.

C. Format: Submit record Product Data as paper copy.

2.03 MISCELLANEOUS RECORD SUBMITTALS

A. Assemble miscellaneous records required by other Specification Sections for miscellaneous record keeping and submittal in connection with actual performance of the Work. Bind or file miscellaneous records and identify each, ready for continued use and reference.

B. Format: Submit miscellaneous record submittals as paper copy.

PART 3 - EXECUTION

3.01 RECORDING AND MAINTENANCE

A. Recording: Maintain one copy of each submittal during the construction period for project record document purposes. Post changes and modifications to project record documents as they occur; do not wait until the end of Project.

B. Maintenance of Record Documents and Samples: Store record documents and Samples in the field office apart from the Contract Documents used for construction. Do not use project record documents for construction purposes. Maintain record documents in good order and in a clean, dry, legible condition, protected from deterioration and loss. Provide access to project record documents for Architect's reference during normal working hours.

END OF SECTION

SECTION 01 79 00
DEMONSTRATION AND TRAINING

PART 1 - GENERAL

1.01 SUMMARY

A. Section includes administrative and procedural requirements for instructing Owner's personnel, including the following:

1. Demonstration of operation of systems, subsystems, and equipment.
2. Training in operation and maintenance of systems, subsystems, and equipment.
3. Demonstration and training video recordings.

1.02 INFORMATIONAL SUBMITTALS

A. Instruction Program: Submit outline of instructional program for demonstration and training, including a list of training modules and a schedule of proposed dates, times, length of instruction time, and instructors' names for each training module. Include learning objective and outline for each training module.

1. Indicate proposed training modules utilizing manufacturer-produced demonstration and training video recordings for systems, equipment, and products in lieu of video recording of live instructional module.

1.03 CLOSEOUT SUBMITTALS

A. Demonstration and Training Video Recordings: Submit one copy within seven days of end of each training module.

1. At completion of training, submit complete training manual(s) for Owner's use.

1.04 QUALITY ASSURANCE

A. Instructor Qualifications: A factory-authorized service representative, complying with requirements in Division 01 Section “Quality Requirements,” experienced in operation and maintenance procedures and training.

1.05 COORDINATION

A. Coordinate instruction schedule with Owner's operations. Adjust schedule as required to minimize disrupting Owner's operations.

B. Coordinate content of training modules with content of approved emergency, operation, and maintenance manuals. Do not submit instruction program until operation and maintenance data has been reviewed and approved by Architect.

PART 2 - PRODUCTS

2.01 INSTRUCTION PROGRAM

A. Program Structure: Develop an instruction program that includes individual training modules for each system and for equipment not part of a system, as required by individual Specification Sections.

B. Training Modules: Develop a learning objective and teaching outline for each module. Include a description of specific skills and knowledge that participant is expected to master. For each module, include instruction for the following as applicable to the system, equipment, or component:

1. Basis of System Design, Operational Requirements, and Criteria: Include the following:

    a. System, subsystem, and equipment descriptions.
    b. Performance and design criteria if Contractor is delegated design responsibility.
    c. Operating standards.
    d. Regulatory requirements.
    e. Equipment function.
    f. Operating characteristics.
    g. Limiting conditions.
    h. Performance curves.

2. Documentation: Review the following items in detail:

    a. Emergency manuals.
    b. Operations manuals.
    c. Maintenance manuals.
    d. Project record documents.
    e. Identification systems.
    f. Warranties and bonds.
    g. Maintenance service agreements and similar continuing commitments.

3. Emergencies: Include the following, as applicable:

    a. Instructions on meaning of warnings, trouble indications, and error messages.
    b. Instructions on stopping.
    c. Shutdown instructions for each type of emergency.
    d. Operating instructions for conditions outside of normal operating limits.
    e. Sequences for electric or electronic systems.
    f. Special operating instructions and procedures.

4. Operations: Include the following, as applicable:

a. Startup procedures.
b. Equipment or system break-in procedures.
c. Routine and normal operating instructions.
d. Regulation and control procedures.
e. Control sequences.
f. Safety procedures.
g. Instructions on stopping.
h. Normal shutdown instructions.
i. Operating procedures for emergencies.
j. Operating procedures for system, subsystem, or equipment failure.
k. Seasonal and weekend operating instructions.
l. Required sequences for electric or electronic systems.
m. Special operating instructions and procedures.

5. Adjustments: Include the following:

a. Alignments.
b. Checking adjustments.
c. Noise and vibration adjustments.
d. Economy and efficiency adjustments.

6. Troubleshooting: Include the following:

a. Diagnostic instructions.
b. Test and inspection procedures.

7. Maintenance: Include the following:

a. Inspection procedures.
b. Types of cleaning agents to be used and methods of cleaning.
c. List of cleaning agents and methods of cleaning detrimental to product.
d. Procedures for routine cleaning
e. Procedures for preventive maintenance.
f. Procedures for routine maintenance.

1) Instruction on use of special tools.

8. Repairs: Include the following:

a. Diagnosis instructions.
b. Repair instructions.
c. Disassembly; component removal, repair, and replacement; and reassembly instructions.
d. Instructions for identifying parts and components.
e. Review of spare parts needed for operation and maintenance.

PART 3 - EXECUTION

3.01 PREPARATION

A. Assemble educational materials necessary for instruction, including documentation and training module. Assemble training modules into a training manual organized in coordination with requirements in Division 01 Section “Operations and Maintenance Data.”

3.02 INSTRUCTION

A. Engage qualified instructors to instruct Owner's personnel to adjust, operate, and maintain systems, subsystems, and equipment not part of a system.

1. Architect will furnish an instructor to describe basis of system design, operational requirements, criteria, and regulatory requirements.
2. Owner will furnish an instructor to describe Owner's operational philosophy.
3. Owner will furnish Contractor with names and positions of participants.

B. Scheduling: Provide instruction at mutually agreed on times. For equipment that requires seasonal operation, provide similar instruction at start of each season.

1. Schedule training with Owner with at least seven days' advance notice.

C. Evaluation: At conclusion of each training module, assess and document each participant's mastery of module by use of a demonstration performance-based test.

3.03 DEMONSTRATION AND TRAINING VIDEO RECORDINGS

A. Pre-Produced Video Recordings: Provide video recordings used as a component of training modules in same format as recordings of live training.

END OF SECTION

SECTION 03 05 80 - UNDER-SLAB VAPOR BARRIER/RETARDER

PART 1 - GENERAL

1.1 SUMMARY

A. Products Supplied Under This Section
   1. Vapor Barrier, seam tape, mastic, pipe boots, detail strip for installation under concrete slabs.

B. RELATED SECTIONS
   1. Section 03 30 00 Cast-in-place Structural Concrete
   2. Section 01 45 23 Structural Testing and Inspection

1.2 REFERENCES

A. American Society for Testing and Materials (ASTM)
   1. ASTM E 1745-97 (2004) Standard Specification for Plastic Water Vapor Retarders Used in Contact with Soil or Granular Fill Under Concrete Slabs
   2. ASTM E 154-88 (2005) Standard Test Methods for Water Vapor Retarders Used in Contact with Earth Under Concrete Slabs
   3. ASTM E 96-95 Standard Test Methods for Water Vapor Transmission of Materials
   4. ASTM E 1643-98 (2005) Standard Practice for Installation of Water Vapor Retarders Used in Contact with Earth or Granular Fill Under Concrete Slabs

B. American Concrete Institute (ACI)
   1. ACI 302.2R-06 Vapor Barrier Component (plastic membrane) is not less than 10 mils thick.

1.3 SUBMITTALS

A. Quality Control / Assurance
   1. Full set of test results as per paragraph 8.3 of ASTM E 1745.
   2. Manufacturer’s samples, literature
   3. Manufacturer’s installation instructions for placement, seaming and pipe boot installation.

1.4 SUBSTITUTIONS

A. Product Review
   1. Request must be made 14 days prior to bid date to allow time for proper review. Reviews will be at contractor’s expense.
   2. Independent laboratory test results showing compliance with ASTM E 1745 Class A, a permeance less than 0.01 Perms (grains/(ft2 *hr * in. Hg) before and after the

mandatory conditioning tests ASTM E 154 Sections 8,11,12, and 13. (Woven, and recycled plastics are not permitted

3. Incomplete substitutions will not be accepted.

PART 2 - PRODUCTS

2.1 MATERIALS

A. Vapor Barrier (Performance based specification). When the specifications of different sections conflict, the contractor shall perform to the most restrictive provision. Vapor Barrier membrane must have the following properties.
   1. Permeance as tested after mandatory conditioning (ASTM E 154 sections 8,11,12,13) less than 0.01 Perms [grains/(ft2 *hr * in.Hg)]
   2. Other performance criteria
      a. Strength: ASTM E 1745 Class A
      b. Thickness: 15 mils minimum

2.2 ACCESSORIES

A. Seam Tape
   1. Tape must have the following qualities:
      a. Water Vapor Transmission Rate ASTM E 96, 0.3 perms or lower
   2. Seam Tape
      a. Manufacturer’s standard seam tape.
      b. Stego Crete Claw (for slabs on void boxes).

B. Vapor Proofing Mastic
   1. Mastic must have the following qualities:
      a. Water Vapor Transmission Rate ASTM E 96 0.3 perms or lower

C. Pipe Boots
   1. Construct pipe boots from vapor barrier material, pressure sensitive tape and/or mastic per manufacturer’s instructions.

PART 3 - EXECUTION

3.1 PREPARATION

A. Ensure that subsoil is approved by architect or geotechnical firm
   1. Level and tamp or roll aggregate, sand or tamped earth base.

3.2 INSTALLATION

A. Install Vapor Barrier/Retarder:

1. Installation shall be in accordance with manufacturer's written instructions and ASTM E 1643-09.
   a. Unroll Vapor Barrier/Retarder with the longest dimension parallel with the direction of the pour.
   b. Lap Vapor Barrier/Retarder over footings or seal to foundation walls.
   c. Overlap joints 6 inches and seal with manufacturer's tape.
   d. Seal all penetrations (including pipes) per manufacturer's instructions.
   e. No penetration of the Vapor Barrier/Retarder is allowed except for reinforcing steel and permanent utilities.
   f. Repair damaged areas by cutting patches of Vapor Barrier/Retarder, overlapping damaged area 6 inches and taping all four sides with tape.

END OF SECTION 03 05 80

SECTION 03 10 00 - CONCRETE FORMING AND ACCESSORIES

PART 1 - GENERAL

1.1 RELATED DOCUMENTS

A. Drawings and general provisions of the Contract, including General and Supplementary Conditions and Division 01 Specification Sections, apply to this Section.

1.2 SUMMARY

A. Section includes cast-in-place concrete formwork, for the following:
   1. Footings and/or piers.
   2. Foundation walls.
   3. Slabs-on-Carton Void Forms.
   4. Suspended slabs.
   5. Concrete toppings.
   6. Building frame members.
   7. Building walls.

B. Related Sections:
   1. Section 01 45 23 “Testing and Inspection Services”.
   2. Section 03 30 00 “Cast In Place Concrete”.
   3. Section 03 20 00 “Concrete Reinforcing”.
   4. Section 03 38 16 “Unbonded Post Tensioned Concrete”.

1.3 REFERENCES

A. The latest adopted edition of all standards referenced in this section shall apply, unless noted otherwise.
   1. American Concrete Institute (ACI):
      a. ACI 117 – Specifications for Tolerances for Concrete Construction and Materials
      b. ACI 301 – Specifications for Structural Concrete for Buildings
      c. ACI 318 – Building Code Requirements for Structural Concrete
      d. ACI 347 – Guide to Formwork for Concrete
      e. ACI SP-4 – Formwork for Concrete.

1.4 PERFORMANCE REQUIREMENTS

A. Design and engineering of formwork, including shores, reshores, false work, bracing, and other temporary supports as well as determining when temporary supports and bracing can safely be removed after the specified curing time is the Contractor’s responsibility.

B. All components of the formwork shall be designed to support all loads imposed during construction including weight of construction equipment, live loads, and lateral loads due to wind and imbalance or discontinuity of building components.

C. If any post tensioned members exist on the project, the formwork supporting those elements shall:
1. It is essential to take into account the stressing sequence of post-tensioned concrete in the design of the formwork. Any concrete element which is stressed can transfer its weight off the form work to the supporting concrete element in which case the forms for the supporting concrete element must be designed to support the entire load tributary of that element.
2. Forms shall be designed and constructed to permit movement during stressing, both lifting and shortening of the concrete elements.
3. Formwork supporting beams and girders shall be designed to support the weight of the beam or girder’s entire tributary area.
4. Formwork supporting post tensioned concrete elements shall not be removed until all concrete supported by the formwork has been fully stressed, but in no case shall the curing time before form removal be less than specified herein.
5. Design, engineering and production of shop drawings for the form work shall be performed under the supervision of a professional engineer.

1.5 ACTION SUBMITTALS

A. Product Data: For each type of product indicated.

B. Formwork Shop Drawings: Prepared by or under the supervision of a qualified professional engineer detailing fabrication, assembly, and support of formwork. Shop drawings for layout of pan type forms, if they exist on the project. Layout only - information and details about the support of these forms is not required, as it is the responsibility of the Contractor and his registered engineer
1. Shoring and Reshoring: Indicate proposed schedule and sequence of stripping formwork, shoring removal, and reshoring installation and removal.

C. Manufacturer’s product data and installation instruction for propriety materials used in exposed concrete work including form liners, release agents, form systems, ties, and accessories.

D. Construction Joint Layout: Indicate proposed construction joints required to construct the structure.
1. Location of construction joints is subject to approval of the Architect.

1.6 DELIVERY, STORAGE, AND HANDLING

A. Deliver form materials in manufacturer’s packaging with installation instructions.

B. Store off ground in ventilated and protected area to prevent deterioration from moisture or damage.

1.7 QUALITY ASSURANCE

A. Installer Qualifications: A qualified installer who employs on Project personnel qualified as ACI-certified Flatwork Technician and Finisher and a supervisor who is an ACI-certified Concrete Flatwork Technician. An experienced installer who has completed work similar in material, design, and extent to that indicated for this Project and whose work has resulted in construction with a record of successful in service performance.

B. Testing Agency Qualifications: Refer Section 01 45 23.

C. Layout and measurement of concrete forms and embedment's, required for work, performed by a licensed surveyor employed by the contractor.

D. Design, engineering and construction, and removal of formwork are the responsibility of the contractor.

E. ACI Publications: Comply with the following unless modified by requirements in the Contract Documents:
1. ACI 301, "Specifications for Structural Concrete."
2. ACI 117, "Specifications for Tolerances for Concrete Construction and Materials."

F. Preinstallation Conference: Conduct conference at Project site.
1. Before submitting design mixtures, review concrete design mixture and examine procedures for ensuring quality of concrete materials. Require representatives of each entity directly concerned with cast-in-place concrete to attend, including the following:
   a. Contractor's superintendent.
   b. Independent testing agency responsible for concrete design mixtures.
   c. Ready-mix concrete manufacturer.
   d. Concrete subcontractor.

PART 2 - PRODUCTS

2.1 FORM-FACING MATERIALS

A. Smooth-Formed Finished Concrete: Form-facing panels that will provide continuous, true, and smooth concrete surfaces. Furnish in largest practicable sizes to minimize number of joints.
1. Plywood, metal, or other approved panel materials.
2. Exterior-grade plywood panels, suitable for concrete forms, complying with DOC PS 1, and as follows:
   a. B-B (Concrete Form), Class 1 or better; mill oiled and edge sealed.

B. Rough-Formed Finished Concrete: Plywood, lumber, metal, or another approved material. Provide lumber dressed on at least two edges and one side for tight fit.

C. Forms for Cylindrical Columns, Pedestals, and Supports: Metal, glass-fiber-reinforced plastic, paper, or fiber tubes that will produce surfaces with gradual or abrupt irregularities not exceeding specified formwork surface class. Provide units with sufficient wall thickness to resist plastic concrete loads without detrimental deformation.

D. Permanent Metal Forms for Slabs: Deck material, gauge and rib pattern shall be as noted on Drawings.

E. Pan-Type Forms: Glass-fiber-reinforced plastic or formed steel, stiffened to resist plastic concrete loads without detrimental deformation.
1. Pans shall be free of dents, irregularities, sag, rust or other deterioration.
2. In areas permanently exposed to view, provide one piece units, manufactured to length between beams or ribs, or segmented units with reinforced butt-joint splices.

F. Chamfer Strips: Wood, metal, PVC, or rubber strips, 3/4 by 3/4 inch, minimum.

G. Rustication Strips: Wood, metal, PVC, or rubber strips, kerfed for ease of form removal.

H. Form-Release Agent: Commercially formulated form-release agent that will not bond with, stain, or adversely affect concrete surfaces and will not impair subsequent treatments of concrete surfaces.
   1. Formulate form-release agent with rust inhibitor for steel form-facing materials.

I. Form Ties: Factory-fabricated, removable or snap-off metal or glass-fiber-reinforced plastic form ties designed to resist lateral pressure of fresh concrete on forms and to prevent spalling of concrete on removal.
   1. Furnish units that will leave no corrodible metal closer than 1 inch to the plane of exposed concrete surface.
   2. Furnish ties that, when removed, will leave holes no larger than 1 inch in diameter in concrete surface.
   3. Furnish ties with integral water-barrier plates to walls indicated to receive damp proofing or waterproofing.

J. Carton Void forms, Moisture resistant treated paper faces, biodegradable, structurally sufficient to support weight of wet concrete mix until initial set; sizes as indicated in drawings.

PART 3 - EXECUTION

3.1 FORMWORK

A. Design, erect, shore, brace, and maintain formwork, according to ACI 301, to support vertical, lateral, static, and dynamic loads, and construction loads that might be applied, until structure can support such loads.

B. Construct formwork so concrete members and structures are of size, shape, alignment, elevation, and position indicated, within tolerance limits of ACI 117.

C. Limit concrete surface irregularities, designated by ACI 347 as abrupt or gradual, as follows:
   1. Class A, 1/8 inch for smooth-formed finished surfaces.
   2. Class B, 1/4 inch
   3. Class C, 1/2 inch
   4. Class D, 1 inch for rough-formed finished surfaces.

D. Construct forms tight enough to prevent loss of concrete mortar.

E. Fabricate forms for easy removal without hammering or prying against concrete surfaces. Provide crush or wrecking plates where stripping may damage cast concrete surfaces. Provide top forms for inclined surfaces steeper than 1.5 horizontal to 1 vertical.
   1. Install keyways, reglets, recesses, and the like, for easy removal.
   2. Do not use rust-stained steel form-facing material.

F. Set edge forms, bulkheads, and intermediate screed strips for slabs to achieve required elevations and slopes in finished concrete surfaces. Provide and secure units to support screed strips; use strike-off templates or compacting-type screeds.

G. Provide temporary openings for cleanouts and inspection ports where interior area of formwork is inaccessible. Close openings with panels tightly fitted to forms and securely braced to prevent loss of concrete mortar. Locate temporary openings in forms at inconspicuous locations.

H. Chamfer exterior corners and edges of permanently exposed concrete.

I. Form openings, chases, offsets, sinkages, keyways, reglets, blocking, screeds, and bulkheads required in the Work. Determine sizes and locations from trades providing such items.

J. Clean forms and adjacent surfaces to receive concrete. Remove chips, wood, sawdust, dirt, and other debris just before placing concrete.

K. Retighten forms and bracing before placing concrete, as required, to prevent mortar leaks and maintain proper alignment.

L. Coat contact surfaces of forms with form-release agent, according to manufacturer's written instructions, before placing reinforcement.

M. Install carton forms and wall retainer in accordance with manufacturer’s recommendations. Protect forms from moisture or crushing

3.2 EMBEDDED ITEMS

A. Place and secure anchorage devices and other embedded items required for adjoining work that is attached to or supported by cast-in-place concrete. Use setting drawings, templates, diagrams, instructions, and directions furnished with items to be embedded. Coordinate work of other Sections in forming and setting openings, slots, recesses, chases, sleeves, bolts, anchors, and other inserts that are attached to the formwork.
   1. Install anchor rods, accurately located, to elevations required and complying with tolerances in Section 7.5 of AISC's "Code of Standard Practice for Steel Buildings and Bridges."
   2. Install reglets to receive waterproofing and to receive through-wall flashings in outer face of concrete frame at exterior walls, where flashing is shown at lintels, shelf angles, and other conditions.
   3. Install dovetail anchor slots in concrete structures as indicated.
   4. Install accessories in accordance with manufacturer’s instructions, level and plumb. Ensure items are not disturbed during concrete placement.

3.3 REMOVING AND REUSING FORMS

A. General: Formwork for sides of beams, walls, columns, and similar parts of the Work that does not support weight of concrete may be removed after cumulatively curing at not less than 50 deg F for 24 hours after placing concrete. Concrete has to be hard enough to not be damaged by form-removal operations and curing and protection operations need to be maintained.
   1. Leave formwork for beam soffits, joists, slabs, and other structural elements that supports weight of concrete in place until concrete has achieved at least 70 percent of its 28-day design compressive strength.
   2. Remove forms only if shores have been arranged to permit removal of forms without loosening or disturbing shores.
   3. Determine compressive strength of in place concrete by testing representative field-cured test specimens according to ACI 301.

B. Obtaining concrete compressive strength tests for the purposes of form removal shall be the responsibility of the Contractor.

C. In the absence of cylinder tests, formwork shall remain in place until the concrete has cured at a temperature of at least 50 degrees Fahrenheit (10 degrees Celsius) for the minimum cumulative time periods given in ACI 347, Section 3.7.2.3. When the surrounding air temperature is below 50 degrees Fahrenheit (10 degrees Celsius), that time period shall be added to the minimum listed time period.

D. Formwork for two-way conventionally reinforced slabs shall remain in place for at least the minimum cumulative time periods specified for one-way slabs of the same maximum span. Two-way conventionally reinforced slabs shall then be reshored until they attain the specified 28 day strength.

E. Minimum cumulative curing times may be reduced by the use of high-early strength cement or forming systems that allow form removal without displacing shores. However, the Contractor must demonstrate, to the satisfaction of the Architect, that the early removal of forms will not result in excessive sag, distortion or damage to the concrete elements.

F. Clean and repair surfaces of forms to be reused in the Work. Split, frayed, delaminated, or otherwise damaged form-facing material will not be acceptable for exposed surfaces. Apply new form-release agent.

G. When forms are reused, clean surfaces, remove fins and laitance, and tighten to close joints. Align and secure joints to avoid offsets. Do not use patched forms for exposed concrete surfaces unless approved by Architect.

3.4 SHORES AND RESHORES

A. Comply with ACI 318 and ACI 301 for design, installation, and removal of shoring and reshoring.
   1. Do not remove shoring or reshoring until measurement of slab tolerances is complete.

B. The Contractor shall be solely responsible for proper shoring and reshoring. Locate and provide adequate reshoring to support construction without excessive stress or deflection.

C. In multistory construction, extend shoring or reshoring over a sufficient number of stories to distribute loads in such a manner that no floor or member will be excessively loaded or will induce tensile stress in concrete members without sufficient steel reinforcement. Reshores shall be located in the same position on each floor. No construction loads shall be placed on the new construction until all supporting reshores have been installed.
   1. Extend shores or reshores from ground to top level in structure three stories or less in height, unless noted otherwise.
   2. In structures over three stories in height, extend shores or reshores at least three levels under the level being placed. Extend shores beyond the minimum number of levels if required to ensure proper distribution of loads throughout the structure.
   3. In crawl spaces or basement, shores or reshores shall extend to mud pads seated firmly on the soil or to on grade construction.

D. Plan sequence of removal of shores and reshore to avoid damage to concrete. Locate and provide adequate reshoring to support construction without excessive stress or deflection.

E. Bottom tier of reshores shall remain in place until the supported concrete has attained at least 85 percent of the specified 28 day compressive strength and construction loads in excess of 20 psf have been removed but not less than 14 days.

3.5 REUSE OF FORMS

A. Clean and repair surfaces of forms to be used in the Work. Split, frayed, delaminated, or otherwise damaged form facing material will not be acceptable for exposed surfaces. Apply new form release agent.

B. When forms are reused, clean surfaces, remove fins and laitance, and tighten to close joints. Align and secure joints to avoid offsets. Do not use patched forms for exposed concrete surfaces unless approved by Architect.

3.6 JOINTS

A. General: Construct joints true to line with faces perpendicular to surface plane of concrete.

B. Construction Joints: Install so strength and appearance of concrete are not impaired, at locations indicated or as approved by Architect.
   1. Place joints perpendicular to main reinforcement. Continue reinforcement across construction joints unless otherwise indicated. Do not continue reinforcement through sides of strip placements of floors and slabs.
   2. Form keyed joints as indicated. Embed keys at least 1-1/2 inches into concrete.
   3. Locate joints for beams, slabs, joists, and girders in the middle third of spans. Offset joints in girders a minimum distance of twice the beam width from a beam-girder intersection.
   4. Locate horizontal joints in walls and columns at underside of floors, slabs, beams, and girders and at the top of footings or floor slabs.
   5. Space vertical joints in walls as indicated. Otherwise, locate joints beside piers integral with walls, near corners, and in concealed locations where possible.
   6. Use a bonding agent at locations where fresh concrete is placed against hardened or partially hardened concrete surfaces.
   7. Use epoxy-bonding adhesive at locations where fresh concrete is placed against hardened or partially hardened concrete surfaces.

C. Contraction Joints in Slabs-on-Grade: Form weakened-plane contraction joints, sectioning concrete into areas as indicated. Construct contraction joints for a depth equal to at least one-fourth of concrete thickness as follows:
   1. Grooved Joints: Form contraction joints after initial floating by grooving and finishing each edge of joint to a radius of 1/8 inch. Repeat grooving of contraction joints after applying surface finishes. Eliminate groover tool marks on concrete surfaces.
   2. Sawed Joints: Form contraction joints with power saws equipped with shatterproof abrasive or diamond-rimmed blades. Cut 1/8-inch- wide joints into concrete when cutting action will not tear, abrade, or otherwise damage surface and before concrete develops random contraction cracks.

D. Isolation Joints in Slabs-on-Grade: After removing formwork, install joint-filler strips at slab junctions with vertical surfaces, such as column pedestals, foundation walls, grade beams, and other locations, as indicated.
   1. Extend joint-filler strips full width and depth of joint, terminating flush with finished concrete surface unless otherwise indicated.

2. Terminate full-width joint-filler strips not less than 1/2 inch or more than 1 inch below finished concrete surface where joint sealants are to be installed.
3. Install joint-filler strips in lengths as long as practicable. Where more than one length is required, lace or clip sections together.

E. Doweled Joints: Install dowel bars and support assemblies at joints where indicated. Lubricate or asphalt coat one-half of dowel length to prevent concrete bonding to one side of joint.

3.7 FINISHING FORMED SURFACES

A. Rough-Formed Finish: As-cast concrete texture imparted by form-facing material with tie holes and defects repaired and patched. Remove fins and other projections that exceed specified limits on formed-surface irregularities.
1. Apply to concrete surfaces not exposed to public view.

B. Smooth-Formed Finish: As-cast concrete texture imparted by form-facing material, arranged in an orderly and symmetrical manner with a minimum of seams. Repair and patch tie holes and defects. Remove fins and other projections that exceed specified limits on formed-surface irregularities.
1. Apply to concrete surfaces exposed to public view, to receive a rubbed finish, or to be covered with a coating or covering material applied directly to concrete.

C. Rubbed Finish: Apply the following to smooth-formed finished as-cast concrete where indicated:
1. Smooth-Rubbed Finish: Not later than one day after form removal, moisten concrete surfaces and rub with carborundum brick or another abrasive until producing a uniform color and texture. Do not apply cement grout other than that created by the rubbing process.

D. Related Unformed Surfaces: At tops of walls, horizontal offsets, and similar unformed surfaces adjacent to formed surfaces, strike off smooth and finish with a texture matching adjacent formed surfaces. Continue final surface treatment of formed surfaces uniformly across adjacent unformed surfaces unless otherwise indicated.

3.8 FINISHING FLOORS AND SLABS

A. General: Comply with ACI 302.1R recommendations for screeding, restraightening, and finishing operations for concrete surfaces. Do not wet concrete surfaces.

B. Scratch Finish: While still plastic, texture concrete surface that has been screeded and bull-floated or darbied. Use stiff brushes, brooms, or rakes to produce a profile amplitude of 1/4 inch in one direction.
1. Apply scratch finish to surfaces indicated or to receive concrete floor toppings or to receive mortar setting beds for bonded cementitious floor finishes.

C. Float Finish: Consolidate surface with power-driven floats or by hand floating if area is small or inaccessible to power driven floats. Restraighten, cut down high spots, and fill low spots. Repeat float passes and restraightening until surface is left with a uniform, smooth, granular texture.
1. Apply float finish to surfaces indicated or to receive trowel finish or to be covered with fluid-applied or sheet waterproofing, built-up or membrane roofing, or sand-bed terrazzo.

3.9 MISCELLANEOUS CONCRETE ITEMS

A. Filling In: Fill in holes and openings left in concrete structures after work of other trades is in place unless otherwise indicated. Mix, place, and cure concrete, as specified, to blend with in-place construction. Provide other miscellaneous concrete filling indicated or required to complete the Work.

B. Curbs: Provide monolithic finish to interior curbs by stripping forms while concrete is still green and by steel-troweling surfaces to a hard, dense finish with corners, intersections, and terminations slightly rounded.

C. Equipment Bases and Foundations: Provide machine and equipment bases and foundations as shown on Drawings. Set anchor bolts for machines and equipment at correct elevations, complying with diagrams or templates from manufacturer furnishing machines and equipment

END OF SECTION 03 10 00

SECTION 03 15 13 - WATERSTOPS

PART 1 - GENERAL

1.1 SECTION INCLUDES

A. Provision of waterstops embedded in concrete and spanning control, expansion, and/or construction joints to create a continuous diaphragm to prevent fluid migration.

B. Non-metallic waterstops for use in concrete joints subjected to chlorinated water, sea water, and many waterborne chemicals.

C. Non-metallic waterstops for use in concrete joints subjected to acids, bases, alcohols, oils, solvents or other chemicals.

1.2 REFERENCES

A. PVC WATERSTOP
1. Corps of Engineers: CRD-C 572-74
2. American Society for Testing Materials (ASTM)
3. Bureau of Reclamation: C-902
4. Canadian General Standards Board: 41-GP-35M Types 1 & 3
5. ACI 350.2: Concrete Structures for Containment of Hazardous Materials

B. HYDROPHILIC WATERSTOP
1. American Society for Testing Materials (ASTM)

1.3 DELIVERY, STORAGE, AND HANDLING

A. Store waterstops under tarps to protect from oil, dirt, sunlight, and premature exposure to water.

1.4 SUBMITTALS

A. Submit shop drawings and fabrication drawings indicating placement of waterstops and shop fabrications.

B. Submit manufacturer’s test data for chemical resistance.

PART 2 - PRODUCTS

2.1 PVC WATERSTOPS FOR EXPANSION JOINTS

A. Provide flexible PVC (polyvinyl chloride) waterstop as manufactured by Greenstreak, or approved equal.

B. The PVC waterstop shall be extruded from an elastomeric plastic material of which the basic resin is prime virgin polyvinyl chloride. The PVC compound shall not contain any scrapped or reclaimed material or pigment whatsoever.

C. Profile: Ribbed with center bulb.

D. Dimensions: 6 inch by 3/8 inch thick.

E. Performance Requirements as follows:

Property	**Test Method**	**Required Limits**
Water absorption	ASTM D 570	0.15% max
Tear Resistance	ASTM D 624	200 lb/in (35 kN/m) min.
Ultimate Elongation	ASTM D 638	350% min.
Tensile Strength	ASTM D 638	2000 psi min.
Low Temperature Brittleness	ASTM D 746	No Failure @ -35° F
Stiffness in Flexure	ASTM D 747	600 psi min.
Specific Gravity	ASTM D 792	1.45 max.
Hardness, Shore A	ASTM D 2240	79 ±3
Tensile Strength after accelerated extraction	CRD-C 572	1850 psi min.
Elongation after accelerated extraction	CRD-C 572	300% min.
Effect of Alkalies after 7 days: Weight Change Hardness Change	CRD-C 572	between -0.10% / +0.25% +/- 5 points

2.2 CHEMICALLY RESISTANT FLEXIBLE WATERSTOP

A. Thermoplastic elastomeric rubber waterstops resistant to oil, solvents, and chemicals as manufactured by Westec or approved equal.

B. Chemical resistance testing to be performed by independent ASTM certified laboratory.

C. Profile: Ribbed with center bulb

D. Dimensions: 6 inches by 3/8 inch thick.

E. Performance requirements as follows:

Property	**Test Method**	**Unexposed Value**
Tensile Strength	ASTM D638	2000 psi
Ultimate Elongation	ASTM D638	450%
100% Modulus	ASTM D638	1000 psi
Shore A Hardness	ASTM D2240	85 units
Low Temp Brittleness	ASTM D746	No Failure @ -70 F

F. Waterstop material should show less than +/- 30% change in material properties, including weight gain after 7 day exposure to selected chemicals, per ASTM D 471 testing.

2.3 HYDROPHILIC WATERSTOP FOR NON-MOVING CONTRACTION AND CONSTRUCTION JOINTS

A. Provide hydrophilic rubber waterstop as supplied by Greenstreak, HYDROTITE profile style number (fill in profile style number).

B. The waterstop shall be a combination of chloroprene rubber and chloroprene rubber modified to impart hydrophilic properties.

C. The waterstop shall have a delay coating to inhibit initial expansion due to moisture present in fresh concrete.

D. Performance Requirements as follows:

Chloroprene Rubber

Property	**Test Method**	**Required Limits**
Tensile Strength	ASTM D 412	1300 PSI min.
Ultimate Elongation	ASTM D 412	400% min.
Hardness (Shore A)	ASTM D 2240	50 +/- 5
Tear Resistance	ASTM D 624	100 lb/inch min.

Modified Chloroprene (Hydrophilic) Rubber

Property	**Test Method**	**Required Limits**
Tensile Strength	ASTM D 412	350 PSI min.
Ultimate Elongation	ASTM D 412	600% min.
Hardness (Shore A)	ASTM D 2240	52 +/- 5
Tear Resistance	ASTM D 624	50 lb/inch
Expansion Ratio	Volumetric Change - Distilled Water @ 70^{o} F	3 to 1 min.

2.4 ACCESSORIES

A. PVC and Chemically Resistant Waterstops
1. Provide factory made waterstop fabrications for all changes of direction, intersections, and transitions leaving only straight butt joint splices for the field.
2. Provide hog rings or grommets spaced at 12 inches on center along length of waterstop.
3. Provide Teflon coated thermostatically controlled waterstop splicing irons for field butt splices.
4. Splices to be free from defects.

B. Hydrophilic Waterstops
1. Provide Greenstreak 7300 two component epoxy gel to secure HYDROTITE to rough, wet (or dry) concrete.
2. Provide LEAKMASTER single component hydrophilic sealant to secure HYDROTITE to rough, dry concrete.
3. Provide cyanacrylate adhesive (super glue) for all splices.
4. Provide LEAKMASTER as addition to cyanacrylate adhesive at all splices for added insurance (Optional).

PART 3 - EXECUTION

3.1 INSTALLATION

A. PVC and Chemically Resistant Waterstops
1. Field butt splices shall be heat fused welded using a teflon covered thermostatically controlled waterstop splicing iron at approximately 380 degrees F. Follow approved manufacturer recommendations.
2. Lapping of waterstop, use of adhesives, or solvents shall not be allowed.
3. Center waterstop in joint and secure waterstop in correct position using hog rings or grommets spaced at 12” on centers along the length of the waterstop and wire tie to adjacent reinforcing steel.
4. Install in longest lengths practicable.
5. Ensure steel reinforcing bars do not interfere with proper position of waterstop.
6. Clean concrete joints of dirt and construction debris prior to second pour of concrete.
7. Cut waterstop ends with miter guide and circular saw to ensure good, full contact at joints.
8. At expansion joints, keep center bulb unembedded at joint centerline.

B. Hydrophilic Waterstop
1. Cut coil ends square (or at proper angle for mitered corners) with shears or sharp blade to fit splices together without overlaps.
2. Splices shall be sealed using cyanacrylate adhesive (super glue) and LEAKMASTER (LEAKMASTER is optional).
3. Seal watertight any exposed cells of HYDROTITE using LEAKMASTER.
4. Follow approved manufacturer written recommendations.
5. Install in longest length practicable.

C. Hydrophilic and PVC Intersections
1. Maintain continuity of waterstops at all intersections and transitions.
2. Joinery between PVC and HYDROTITE shall be sealed using LEAKMASTER.
3. Follow approved manufacturer written recommendations.

D. Retrofit Waterstop
1. Prepare existing concrete by grinding away irregularities. Clean concrete to ensure good epoxy bond.
2. Apply continuous bed of epoxy to concrete 1/8 inch thick.
3. Embed retrofit waterstop in uncured epoxy.
4. Mechanically fasten waterstop to concrete using stainless steel batten bars and anchor bolts staggered 6 inches OC max. Use batten bars on top and bottom.
5. Tool continuous layer of epoxy over batten bars and bolts to protect from corrosion.
6. Use expansion joint filler at moving joints to minimize shear stresses.

E. Concrete Placement at Waterstop
1. Carefully place concrete without displacing waterstop from proper position.
2. Thoroughly and systematically vibrate concrete around waterstop to obtain impervious, void free concrete in vicinity of joint and to maximize intimate contact between concrete and waterstop.
3. After first pour, clean un-embedded waterstop leg to ensure full contact of second pour concrete.

END OF SECTION 03 15 13

SECTION 03 20 00 - CONCRETE REINFORCING

PART 1 - GENERAL

1.1 RELATED DOCUMENTS

A. Drawings and general provisions of the Contract, including General and Supplementary Conditions and Division 01 Specification Sections, apply to this Section.

1.2 SUMMARY

A. Section includes cast-in-place concrete reinforcement, for the following:
   1. Footings and/or piers.
   2. Foundation walls.
   3. Slabs-on-grade.
   4. Suspended slabs.
   5. Concrete toppings.
   6. Building frame members.
   7. Building walls.

B. Related Sections:
   1. Section 01 45 23 “Testing and Inspection Services”.
   2. Section 03 10 00 “Concrete Forming and Accessories”.
   3. Section 03 30 00 “Cast In Place Concrete”.
   4. Section 03 38 16 “Unbonded Post Tensioned Concrete”.
   5. Section 04 22 00 “Concrete Unit Masonry”.
   6. Section 31 20 00 "Earth Moving".
   7. Section 31 63 29 "Drilled Concrete Piers and Shafts".

1.3 REFERENCES

A. The latest adopted edition of all standards referenced in this section shall apply, unless noted otherwise.
   1. American Concrete Institute (ACI)
      a. ACI 117 – Specifications for Tolerances for Concrete Construction and Materials.
      b. ACI 301 – Specifications for Structural Concrete for Buildings
      c. ACI 315 – Details and Detailing of Concrete Reinforcement
      d. SP-66 ACI Detailing Manual
   2. American Welding Society (AWS)
      a. AWS D1.1 – Structural Welding Code
   3. Concrete Reinforcing Steel Institute (CRSI)
      a. CRSI – Manual of Standard Practice
      b. CRSI 63 – Recommended Practice for Placing Reinforcing Bars
      c. CRSI 65 – Recommended Practice for Placing Bar Supports, Specifications and Nomenclature.

B. American Society of Testing Materials (ASTM)

a. ASTM-A185: Standard Specification for Steel Welded Wire Reinforcement, Plain, for Concrete Reinforcement.
b. ASTM-A663: Standard Specification for Steel Bars, Carbon, Merchant Quality, Mechanical Properties.
c. ASTM-A615: Standard Specification for Deformed and Plain Carbon-Steel Bars for Concrete Reinforcement.
d. ASTM-A675: Standard Specification for Steel Bars, Carbon, Hot-Wrought, Special Quality, Mechanical Properties.
e. ASTM-A706: Standard Specification for Low-Alloy Steel Deformed and Plain Bars for Concrete Reinforcement.
f. ASTM-A775: Standard Specification for Epoxy-Coated Reinforcing Steel Bars.
g. ASTM-A884: Standard Specification for Epoxy-Coated Wire and Welded Wire Reinforcement.

C. In the case of conflict between the Contract Documents and a reference standard, the Contract Documents shall govern. In the case of a conflict between the Contract Documents and the Building Code, the more stringent shall govern.

1.4 ACTION SUBMITTALS

A. Product Data: For each type of product indicated.

B. LEED Submittals:
1. Product Data for Credit MR 4: For products having recycled content, documentation indicating percentages by weight of postconsumer and preconsumer recycled content. Include statement indicating cost for each product having recycled content.

C. Steel Reinforcement Shop Drawings: Placing drawings that detail fabrication, bending, and placement. Include bar sizes, lengths, material, grade, bar schedules, stirrup spacing, bent bar diagrams, bar arrangement, splices and laps, mechanical connections, tie spacing, hoop spacing, and supports for concrete reinforcement, according to ACI 315 “Details and Detailing of Concrete Reinforcement.”
1. Do not reproduce the structural drawings for use as shop drawings.

D. Bar Supports: Submit manufacturer’s product information for bolsters, chairs, spaces, and other devices for spacing, supporting, and fastening reinforcing bars and welded wire fabric.

1.5 INFORMATIONAL SUBMITTALS

A. Qualification Data: For testing agency, installer, and fabricator as indicated herein.

B. Welding certificates.

C. Material Certificates: For each of the following, signed by manufacturers:
1. Steel reinforcement and accessories.

1.6 QUALITY ASSURANCE

A. Testing Agency Qualifications: Refer Section 01 45 23.

B. Installer Qualifications: An experienced installer who has completed reinforcing installation work similar in material, design, and extent to that indicated for this Project and whose work has resulted in construction with a record of successful in service performance.

C. Fabricator Qualifications: An experienced fabricator who has completed reinforcing fabrication work similar in material, design, and extent to that indicated for this Project and whose work has resulted in construction with a record of successful in service performance.

D. Welding Qualifications: Qualify procedures and personnel according to AWS D1.4, "Structural Welding Code - Reinforcing Steel."

E. Preinstallation Conference: Conduct conference at Project site.
   1. Before submitting design mixtures, review concrete design mixture and examine procedures for ensuring quality of concrete materials. Require representatives of each entity directly concerned with cast-in-place concrete to attend, including the following:
      a. Contractor's superintendent.
      b. Independent testing agency responsible for concrete design mixtures.
      c. Ready-mix concrete manufacturer.
      d. Concrete subcontractor.

1.7 DELIVERY, STORAGE, AND HANDLING

A. Steel Reinforcement: Deliver, store, and handle steel reinforcement to prevent bending and damage. Avoid damaging coatings, if any, on steel reinforcement.

PART 2 - PRODUCTS

2.1 STEEL REINFORCEMENT

A. Recycled Content of Steel Products: Postconsumer recycled content plus one-half of preconsumer recycled content not less than 25 percent.

B. Reinforcing Bars: ASTM A 615, Grade 60 for #6 and smaller bars, Grade 75 for #7 and larger bars, deformed.

C. Low-Alloy-Steel Reinforcing Bars for bars to be welded: ASTM A 706, Grade 60 for #6 and smaller bars, Grade 75 for #7 and larger bars, deformed.

D. Stainless-Steel Reinforcing Bars: ASTM A 955, Grade 60, [Type 304] [Type 316L], deformed.

E. Steel Bar Mats: ASTM A 184, fabricated from ASTM A 615, Grade 60 or ASTM A 706, deformed bars, assembled with clips.

F. Plain-Steel Wire: ASTM A 82, as drawn .

G. Deformed-Steel Wire: ASTM A 496.

H. Plain-Steel Welded Wire Reinforcement: ASTM A 185, plain, fabricated from as-drawn steel wire into flat sheets.

I. Deformed-Steel Welded Wire Reinforcement: ASTM A 497, flat sheet.

2.2 REINFORCEMENT ACCESSORIES

A. Joint Dowel Bars: ASTM A 615, Grade 60, plain-steel bars, cut true to length with ends square and free of burrs.

B. Bar Supports: Bolsters, chairs, spacers, and other devices for spacing, supporting, and fastening reinforcing bars and welded wire reinforcement in place. Manufacture bar supports from steel wire, plastic, or precast concrete according to CRSI's "Manual of Standard Practice," of greater compressive strength than concrete and as follows:
1. For concrete surfaces exposed to view where legs of wire bar supports contact forms, use CRSI Class 1 plastic-protected steel wire or CRSI Class 2 stainless-steel bar supports.
2. Use wire bar type supports complying with CRSI recommendations, unless otherwise indicated. Do not use wood, brick, or other unacceptable materials.

2.3 FABRICATING REINFORCEMENT

A. Fabricate steel reinforcement according to CRSI's "Manual of Standard Practice." Combined tolerances for formwork, reinforcing fabrication, and reinforcing placement shall not permit a reduction in specified concrete cover of reinforcing steel. In case of fabricating errors, do not re-bend or straighten reinforcement in a manner that will injure or weaken material. Bars used for concrete reinforcement shall meet following requirements for fabricating tolerances:
1. Sheared length: Plus or minus 1 inch.
2. Depth of truss bars: Plus 0, minus ½ inch.
3. Overall dimensions of stirrups, ties, and spirals: Plus or minus ½ inch.
4. Other bends: Plus or minus 1 inch.

B. For bars with end bearing splice couplers, bar ends shall terminate in flat surfaces, within 1.5 degrees of a right angle to axis of bars and shall be fitted within 3 degrees of full bearing after assembly.

2.4 DOWEL BAR ANCHORS/SPLICERS

A. A. Provide dowel bar anchors and threaded dowels designed to develop, both in tension and compression, 125% of the minimum ASTM specified yield strength of the dowel bars, as evidenced by published I.C.B.O. test reports. Unless otherwise indicated, anchors shall be furnished with ACI standard 90 degree hooks. Dowels shall be furnished by anchor supplier. The following dowel splicing systems are acceptable.
1. Richmond Screw Anchor “Dowel Bar Splicer”
2. Erico “Lenton Form Saver”

3. Dayton Barsplice “Grip-Twist”

2.5 MECHANICAL SPLICES

A. A. Provide mechanical splices designed to develop, both in tension and compression, 125% of minimum ASTM yield strength of the smaller bar being coupled, as evidenced by published I.C.B.O test reports. The following bar splicing systems are acceptable.
1. Erico “Cadweld C-Series”
2. Erico “Lenton”
3. Dayton Barsplice “Bar Grip”
4. Dayton Barsplice “Grip Twist”

2.6 METAL ANCHORAGE AND EMBEDDED METAL ASSEMBLIES

A. Steel Shapes and Plates: Conform to ASTM A36, “Specification for Structural Steel”.

B. Headed Stud Anchors: Headed studs welded by full fusion process, as furnished by TRW Nelson Stud Welding Division.

C. Welding Electrodes: AWS 5.5, Series E70.

D. Welded Deformed Bar Anchors: Welded by full fusion process, as furnished by TRW Nelson Stud Welding Division.

E. All metal assemblies exposed to earth, weather or moisture, including exposure to a crawl space environment, shall be hot dip galvanized.

2.7 FABRICATION OF METAL ACCESSORIES AND EMBEDDED METAL ASSEMBLIES

A. Fabricate and assemble structural steel items in the shop. Shearing, flame cutting, and chipping shall be done carefully and accurately. Holes shall be cut, drilled, or punched at right angles to the surface of metal and shall not be made or enlarged by burning. Holes shall be clean-cut without torn or ragged edges. Welded construction shall conform to AISC “Specification for the Design, Fabrication, and Erection of Structural Steel for Buildings,” and AWS D1.1. Welding shall be done by AWS certified welders.

B. Welding of deformed bar anchors and headed stud anchors shall be done by full fusion process equal to that of TRW Nelson Stud Welding Division of KSM Welding Services Division, Omark, Ind. A minimum of two headed studs shall be tested at start of each production period for proper quality control. Studs shall be capable of being bent 45 degrees without weld failure.

C. Welding of reinforcement shall be done in strict accordance with AWS requirements, using recommended preheat temperature and electrode for type of reinforcement being welded. Bars larger than No. 9 shall not be welded. Welding shall be performed subject to the observance and testing laboratory. Under no circumstances is ordinary reinforcing (ASTM A615) to be welded.

D. Coatings, where required, shall be applied after fabrication and prior to casting concrete.

PART 3 - EXECUTION

3.1 EMBEDDED ITEMS

A. Place and secure anchorage devices and other embedded items required for adjoining work that is attached to or supported by cast-in-place concrete. Use setting drawings, templates, diagrams, instructions, and directions furnished with items to be embedded.
1. Install anchor rods, accurately located, to elevations required and complying with tolerances in Section 7.5 of AISC's "Code of Standard Practice for Steel Buildings and Bridges."
2. Install reglets to receive waterproofing and to receive through-wall flashings in outer face of concrete frame at exterior walls, where flashing is shown at lintels, shelf angles, and other conditions.
3. Install dovetail anchor slots in concrete structures as indicated.

3.2 STEEL REINFORCEMENT

A. General: Comply with CRSI's "Manual of Standard Practice" for placing reinforcement.
1. Do not cut or puncture vapor retarder. Repair damage and reseal vapor retarder before placing concrete.

B. Clean reinforcement of loose rust and mill scale, earth, ice, and other foreign materials that would reduce bond to concrete.

C. Accurately position, support, and secure reinforcement against displacement. Locate and support reinforcement with bar supports to maintain minimum concrete cover. Do not tack weld crossing reinforcing bars.
1. Weld reinforcing bars according to AWS D1.4, where indicated.

D. Set wire ties with ends directed into concrete, not toward exposed concrete surfaces.

E. Install welded wire reinforcement in longest practicable lengths on bar supports spaced to minimize sagging. Lap edges and ends of adjoining sheets at least one mesh spacing. Offset laps of adjoining sheet widths to prevent continuous laps in either direction. Lace overlaps with wire.

F. Provide minimum concrete covering for reinforcement as shown in the Structural General Notes.

G. Place bars to following tolerances:
1. Clear distance to formed surfaces: Plus or minus ¼ inch.
2. Minimum spacing between bars: Minus ¼ inch.
3. Top bars in slabs and beams:
   a. Members 8 inches deep or less: Plus or minus ¼ inch.
   b. Members between 8 and 24 inches deep: Plus or minus ½ inch.
   c. Members more than 24 inches deep: Plus or minus 1 inch.
4. Crosswise of members: Spaced evenly within 2 inches.
5. Length of members: Plus or minus 2 inches.

H. Bars may be moved as necessary to avoid interference with other reinforcing steel, conduits, or embedded items. If moved more than one bar diameter, or enough to exceed above tolerances, resulting arrangement of bars subject to approval.

I. Support reinforcement and fasten together to prevent displacement by construction loads or placing concrete beyond tolerances indicated.

J. Unless permitted by Engineer, do not bend reinforcement after embedding in hardened concrete.

3.3 FIELD QUALITY CONTROL

A. Testing and Inspecting: See Section 01 45 23.

B. Inspections:
   1. Steel reinforcement placement.
   2. Steel reinforcement welding.

END OF SECTION 03 20 00

SECTION 03 30 00 - CAST-IN-PLACE CONCRETE

PART 1 - GENERAL

1.1 RELATED DOCUMENTS

A. Drawings and general provisions of the Contract, including General and Supplementary Conditions and Division 01 Specification Sections, apply to this Section.

1.2 SUMMARY

A. Section includes cast-in-place concrete, including formwork, reinforcement, concrete materials, mixture design, placement procedures, and finishes, for the following:
1. Footings.
2. Foundation walls.
3. Slabs-on-grade.
4. Suspended slabs.
5. Concrete toppings.
6. Building frame members.
7. Building walls.

B. Related Sections:
1. Section 01 45 23 “Structural Testing and Inspection Services”.
2. Section 03 20 00 "Concrete Forming and Accessories".
3. Section 03 10 00 "Concrete Reinforcing".
4. Section 03 15 13 “Waterstops”.
5. Section 03 05 80 “Under-slab Vapor Barrier – Retarder”.
6. Section 31 63 29 “Drilled Concrete Piers and Shafts”.

1.3 REFERENCES

A. The latest adopted edition of all standards referenced in this section shall apply, unless noted otherwise.
1. ACI 301 – Specification for Structural Concrete.
2. ACI 302 – Guide for Concrete Floor Slab Construction.
3. ACI 304 – Guide for Measuring, Mixing, Transporting and Placing Concrete.
4. ACI 305 – Hot Weather Concreting.
5. ACI 306 – Cold Weather Concreting.
6. ACI 308 – Guide to Curing Concrete.
7. ACI 309 – Guide for Consolidating Concrete.
8. ACI 311 – ACI Manual for Concrete Inspection.
9. ACI 318 – Building Code Requirements for Reinforced Concrete.
10. ACI 347 – Guide to Concrete Formwork.
11. ACI 207 – Mass Concrete.
12. ACI 211.1 – Standard Practice for Selecting Proportions for Normal, Heavyweight, and Mass Concrete.
13. ACI 211.2 – Standard Practice for Selecting Proportions for Structural Lightweight Concrete.
14. ACI 212.3 – Chemical Admixture for Concrete.

15. ACI 212.4 – Guide for the use of High Range Water Reducing Admixtures in Concrete.
16. ACI 214 – Evaluation of Strength Test Results of Concrete.
17. ACI 303 – Guide to Cast in Place Architectural Concrete Practice.
18. Concrete Reinforcing Steel Institute, "Manual of Standard Practice".

B. In the case of conflict between the Contract Documents and a referenced standard, the Contract Documents shall govern. In the case of a conflict between the Contract Documents and the Building Code, the more stringent shall govern.

1.4 DEFINITIONS

A. Cementitious Materials: Portland cement alone or in combination with one or more of the following: blended hydraulic cement, fly ash and other pozzolans, ground granulated blast-furnace slag, and silica fume; subject to compliance with requirements.

1.5 ACTION SUBMITTALS

A. Product Data: For each type of product indicated.

B. Design Mixtures: For each concrete mixture include the following information. Submit alternate design mixtures when characteristics of materials, Project conditions, weather, test results, or other circumstances warrant adjustments.
1. Each proposed mix design shall be accompanied by a complete standard deviation analysis based on at least 30 consecutive strength tests, or by three laboratory trial mixtures with confirmation tests.
2. Proportions of cement, fine, and coarse aggregate, and water.
3. Design strength.
4. Maximum slump.
5. Air Content.
6. Maximum water / cement ratio.
7. Maximum and minimum concrete temperature that is acceptable at time of placement for which the manufacturer can guarantee the strength of the concrete.
8. Type cement and aggregates.
9. Type and quantities of all admixtures.
10. Air dry density and splitting tensile strength for lightweight concrete determined in accordance with ASTM 330.
11. Type, color, and quantities of integral coloring compounds, where applicable.
12. Indicate amounts of mixing water to be withheld for later addition at Project site.

C. Steel Reinforcement Shop Drawings: Refer Section 03 20 00.

D. Formwork Shop Drawings: Refer Section 03 10 00.

E. Provide Mockup 2'-0" x2'-0" for concrete finishes.

F. Construction Joint Layout: Indicate proposed construction joints required to construct the structure.
1. Location of construction joints is subject to approval of the Architect.

1.6 INFORMATIONAL SUBMITTALS

A. Qualification Data: For Installer and manufacturer.

B. Welding certificates.

C. Material Certificates: For each of the following, signed by manufacturers:
1. Cementitious materials.
2. Admixtures.
3. Fiber reinforcement.
4. Curing compounds.
5. Floor and slab treatments.
6. Bonding agents.
7. Adhesives.
8. Semi rigid joint filler.
9. Joint-filler strips.
10. Repair materials.

D. Material Test Reports: For the following, from a qualified testing agency, indicating compliance with requirements:
1. Aggregates. Include service record data indicating absence of deleterious expansion of concrete due to alkali aggregate reactivity.

E. Floor surface flatness and levelness measurements indicating compliance with specified tolerances.

F. Field quality-control reports.

G. Minutes of preinstallation conference.

1.7 QUALITY ASSURANCE

A. Installer Qualifications: A qualified installer who employs on Project personnel qualified as ACI-certified Flatwork Technician and Finisher and a supervisor who is an ACI-certified Concrete Flatwork Technician.

B. Manufacturer Qualifications: A firm experienced in manufacturing ready-mixed concrete products and that complies with ASTM C 94 requirements for production facilities and equipment.
1. Manufacturer certified according to NRMCA's "Certification of Ready Mixed Concrete Production Facilities."

C. Testing Agency Qualifications: See Section 01 45 23.
1. Contractor’s responsibility to testing laboratory.
   a. Furnish all labor and materials as required to assist testing agency in obtaining, making and handling samples at the jobsite.
   b. Advise the Owner’s Testing Laboratory sufficiently in advance of operations to allow adequate time for the assignment of testing personnel.
   c. Furnish and maintain adequate facilities for proper curing of concrete test specimens on the project site in accordance with ASTM C31.

D. Source Limitations: Obtain each type or class of cementitious material of the same brand from the same manufacturer's plant, obtain aggregate from single source, and obtain admixtures from single source from single manufacturer.

E. Welding Qualifications: Qualify procedures and personnel according to AWS D1.4, "Structural Welding Code - Reinforcing Steel."

F. ACI Publications: Comply with the following unless modified by requirements in the Contract Documents:
   1. ACI 301, "Specifications for Structural Concrete."
   2. ACI 117, "Specifications for Tolerances for Concrete Construction and Materials."

G. Mockups: Cast concrete slab-on-grade and formed-surface panels to demonstrate typical joints, surface finish, texture, tolerances, floor treatments, and standard of workmanship.
   1. Build panel approximately 200 sq. ft. for slab-on-grade and 100 sq. ft. for formed surface in the location indicated or, if not indicated, as directed by Architect.

H. Preinstallation Conference: Conduct conference at Project site.
   1. Before submitting design mixtures, review concrete design mixture and examine procedures for ensuring quality of concrete materials. Require representatives of each entity directly concerned with cast-in-place concrete to attend, including the following:
      a. Contractor's superintendent.
      b. Independent testing agency responsible for concrete design mixtures.
      c. Ready-mix concrete manufacturer.
      d. Concrete subcontractor.

1.8 DELIVERY, STORAGE, AND HANDLING

A. Steel Reinforcement: Deliver, store, and handle steel reinforcement to prevent bending and damage. Avoid damaging coatings, if any, on steel reinforcement.

B. Waterstops: Store waterstops under cover to protect from moisture, sunlight, dirt, oil, and other contaminants.

PART 2 - PRODUCTS

2.1 FORM-FACING MATERIALS

A. See Section 03 10 00.

2.2 STEEL REINFORCEMENT

A. See Section 03 20 00.

2.3 REINFORCEMENT ACCESSORIES

A. See Section 03 20 00.

2.4 CONCRETE MATERIALS

A. Cementitious Material: Use the following cementitious materials, of the same type, brand, and source, throughout Project:
   1. Portland Cement: ASTM C 150, Type I or Type I/II, gray. Supplement with the following:
      a. Fly Ash: ASTM C 618, Class F or C. Carbon content shall not exceed 3 percent by volume.
      b. Ground Granulated Blast-Furnace Slag: ASTM C 989, Grade 100 or 120.

B. Normal-Weight Aggregates: ASTM C 33, coarse aggregate or better, graded. Provide aggregates from a single source with documented service record data of at least 10 years of satisfactory service in similar applications and service conditions using similar aggregates and cementitious materials.
   1. Maximum Coarse-Aggregate Size: 1-1/2 inches, 1 inch, or 3/4 inch nominal as indicated on Drawings for specific uses.
   2. Fine Aggregate: Free of materials with deleterious reactivity to alkali in cement.

C. Lightweight Aggregate: ASTM C 330, 3/4-inch nominal maximum aggregate size.

D. Water: ASTM C 94 and potable.

2.5 ADMIXTURES

A. Air-Entraining Admixture: ASTM C 260.

B. Chemical Admixtures: Provide admixtures certified by manufacturer to be compatible with other admixtures and that contain not more than 0.05 percent water soluble chloride ions. Do not use calcium chloride or admixtures containing calcium chloride.
   1. Water-Reducing Admixture: ASTM C 494, Type A.
   2. Retarding Admixture: ASTM C 494, Type B.
   3. Water-Reducing and Retarding Admixture: ASTM C 494, Type D.
   4. High-Range, Water-Reducing Admixture: ASTM C 494, Type F.
   5. High-Range, Water-Reducing and Retarding Admixture: ASTM C 494, Type G.
   6. Plasticizing and Retarding Admixture: ASTM C 1017, Type II.

C. Color Pigment: ASTM C 979, synthetic mineral-oxide pigments or colored water-reducing admixtures; color stable, free of carbon black, nonfading, and resistant to lime and other alkalis.
   1. Manufacturers: Subject to compliance with requirements, provide products by one of the following:
      a. ChemMasters.
      b. Davis Colors.
      c. Dayton Superior Corporation.
      d. Hoover Color Corporation.
      e. Lambert Corporation.
      f. QC Construction Products.

g. Rockwood Pigments NA, Inc.
h. Scofield, L. M. Company.
i. Solomon Colors, Inc.

2. Color: As selected by Architect from manufacturer's full range.

2.6 CONCRETE MIX DESIGNS

A. Selection of Proportions: Proportions of ingredients for concrete mixes shall be determined by a qualified concrete supplier in accordance with the requirements of ACI 301.

B. Required average strength above specified strength: Determination of required average strength above specified strength shall be based on the standard deviation record of the production facility in accordance with ACI 301. Calculation of standard deviation of compressive strength results shall be made in accordance with ACI 214. If a suitable record of strength tests is not available, proportions shall be selected on the basis of laboratory trial batches to produce an average strength greater than the strength f'c by the amount defined in ACI 301.

2.7 VAPOR RETARDERS

A. See Section 03 05 80.

2.8 FLOOR AND SLAB TREATMENTS

A. Slip-Resistive Emery Aggregate Finish: Factory-graded, packaged, rustproof, non-glazing, abrasive, crushed emery aggregate containing not less than 50 percent aluminum oxide and not less than 20 percent ferric oxide; unaffected by freezing, moisture, and cleaning materials with 100 percent passing No. 8 sieve.

1. Products: Subject to compliance with requirements, provide one of the following:
   a. Anti-Hydro International, Inc.; Emery.
   b. Dayton Superior Corporation; Emery Tuff Non-Slip.
   c. Lambert Corporation; EMAG-20.
   d. L&M Construction Chemicals, Inc.; Grip It.
   e. Metalcrete Industries; Metco Anti-Skid Aggregate.

B. Slip-Resistive Aluminum Granule Finish: Factory-graded, packaged, rustproof, nonglazing, abrasive aggregate of not less than 95 percent fused aluminum-oxide granules.

1. Products: Subject to compliance with requirements, provide one of the following:
   a. Anti-Hydro International, Inc.; A-H Alox.
   b. BASF Construction Chemicals - Building Systems; Frictex NS.
   c. L&M Construction Chemicals, Inc.; Grip It AO.

2.9 LIQUID FLOOR TREATMENTS

A. VOC Content: Liquid floor treatments shall have a VOC content of 200 g/L or less when calculated according to 40 CFR 59, Subpart D (EPA Method 24).

B. Penetrating Liquid Floor Treatment: Clear, chemically reactive, waterborne solution of inorganic silicate or siliconate materials and proprietary components; odorless; that penetrates, hardens, and densifies concrete surfaces.
   1. Products: Subject to compliance with requirements, provide one of the following:
      a. ChemMasters; Chemisil Plus.
      b. ChemTec Int'l; ChemTec One.
      c. Conspec by Dayton Superior; Intraseal.
      d. Curecrete Distribution Inc.; Ashford Formula.
      e. Dayton Superior Corporation; Day-Chem Sure Hard (J-17).
      f. Edoco by Dayton Superior; Titan Hard.
      g. Euclid Chemical Company (The), an RPM company; Euco Diamond Hard.
      h. Kaufman Products, Inc.; SureHard.
      i. L&M Construction Chemicals, Inc.; Seal Hard.
      j. Meadows, W. R., Inc.; LIQUI-HARD.
      k. Metalcrete Industries; Floorsaver.
      l. Nox-Crete Products Group; Duro-Nox.
      m. Symons by Dayton Superior; Buff Hard.
      n. US SPEC, Division of US Mix Products Company; US SPEC Industraseal.
      o. Vexcon Chemicals, Inc.; Vexcon StarSeal PS Clear.

C. Penetrating Liquid Floor Treatments for Polished Concrete Finish: Clear, waterborne solution of inorganic silicate or siliconate materials and proprietary components; odorless; that penetrates, hardens, and is suitable for polished concrete surfaces.
   1. Products: Subject to compliance with requirements, provide one of the following:
      a. Advanced Floor Products; Retro-Plate 99.
      b. L&M Construction Chemicals, Inc.; FGS Hardener Plus.
      c. QuestMark, a division of CentiMark Corporation; DiamondQuest Densifying Impregnator Application.

2.10 RELATED MATERIALS

A. Expansion and Isolation Joint Filler Strips: ASTM D 1751, asphalt-saturated cellulosic fiber or ASTM D 1752, cork or self-expanding cork.

B. Semi-rigid Joint Filler: Two-component, semi-rigid, 100 percent solids, epoxy resin with a Type A shore durometer hardness of 80 per ASTM D 2240.

C. Bonding Agent: ASTM C 1059, Type II, non-redispersible, acrylic emulsion or styrene butadiene.

D. Epoxy Bonding Adhesive: ASTM C 881, two-component epoxy resin, capable of humid curing and bonding to damp surfaces, of class suitable for application temperature and of grade to suit requirements, and as follows:
   1. Types IV and V, load bearing, for bonding hardened or freshly mixed concrete to hardened concrete.

E. Dovetail Anchor Slots: Hot-dip galvanized-steel sheet, not less than 0.034 inch thick, with bent tab anchors. Temporarily fill or cover face opening of slots to prevent intrusion of concrete or debris.

2.11 REPAIR MATERIALS

A. Repair Underlayment: Cement-based, polymer-modified, self-leveling product that can be applied in thicknesses from 1/8 inch and that can be feathered at edges to match adjacent floor elevations.
   1. Cement Binder: ASTM C 150, Portland cement or hydraulic or blended hydraulic cement as defined in ASTM C 219.
   2. Primer: Product of underlayment manufacturer recommended for substrate, conditions, and application.
   3. Aggregate: Well-graded, washed gravel, 1/8 to 1/4 inch or coarse sand as recommended by underlayment manufacturer.
   4. Compressive Strength: Not less than 4100 psi at 28 days when tested according to ASTM C 109.

B. Repair Overlayment: Cement-based, polymer-modified, self-leveling product that can be applied in thicknesses from 1/4 inch and that can be filled in over a scarified surface to match adjacent floor elevations.
   1. Cement Binder: ASTM C 150, Portland cement or hydraulic or blended hydraulic cement as defined in ASTM C 219.
   2. Primer: Product of topping manufacturer recommended for substrate, conditions, and application.
   3. Aggregate: Well-graded, washed gravel, 1/8 to 1/4 inch or coarse sand as recommended by topping manufacturer.
   4. Compressive Strength: Not less than 5000 psi at 28 days when tested according to ASTM C 109.

2.12 CONCRETE MIXTURES, GENERAL

A. Prepare design mixtures for each type and strength of concrete, proportioned on the basis of laboratory trial mixture or field test data, or both, according to ACI 301.
   1. Use a qualified independent testing agency for preparing and reporting proposed mixture designs based on laboratory trial mixtures.

B. Cementitious Materials: Use fly ash, pozzolan, ground granulated blast-furnace slag, and silica fume as needed to reduce the total amount of Portland cement, which would otherwise be used, as indicated in Structural General Notes.

C. Limit water-soluble, chloride-ion content in hardened concrete to 0.06 percent by weight of cement.

D. Admixtures: Use admixtures according to manufacturer's written instructions.
   1. Use water-reducing, high-range water-reducing, or plasticizing admixture in concrete, as required, for placement and workability.
   2. Use water-reducing and retarding admixture when required by high temperatures, low humidity, or other adverse placement conditions.
   3. Use water-reducing admixture in pumped concrete, concrete for heavy-use industrial slabs and parking structure slabs, concrete required to be watertight, and concrete with a water-cementitious materials ratio below 0.50.
   4. Use corrosion-inhibiting admixture in concrete mixtures where indicated.

E. Color Pigment: Add color pigment to concrete mixture according to manufacturer's written instructions and to result in hardened concrete color consistent with approved mockup.

2.13 NON-SHRINK GROUT

A. Grout shall be prepackaged, non metallic, and non gaseous. It shall be non-shrink when tested in accordance with ASTM-C1107 Grade B or C at a fluid consistency (flow cone) of 20 to 30 seconds. Thirty-minute-old grout shall flow through the flow cone after slight agitation, in temperatures of 40 degrees to 90 degrees Fahrenheit. Grout shall be bleed free and attain 7,500 psi compressive strength in 28 days at fluid consistency. Certified independent test data required. Approved products include the following:
   1. “Euco NS” by Euclid Chemical Company
   2. “Masterflow 713” by Master Builders.

2.14 CONCRETE MIXTURES FOR BUILDING ELEMENTS

A. Proportion normal-weight concrete mixture as indicated in Structural General Notes:

2.15 FABRICATING REINFORCEMENT

A. Fabricate steel reinforcement according to CRSI's "Manual of Standard Practice."

2.16 CONCRETE MIXING

A. Ready-Mixed Concrete: Measure, batch, mix, and deliver concrete according to ASTM C 94 and ASTM C 1116, and furnish batch ticket information.
   1. When air temperature is between 85 and 90 deg F, reduce mixing and delivery time from 1-1/2 hours to 75 minutes; when air temperature is above 90 deg F, reduce mixing and delivery time to 60 minutes.

PART 3 - EXECUTION

3.1 FORMWORK

A. See Section 03 10 00.

3.2 EMBEDDED ITEMS

A. Place and secure anchorage devices and other embedded items required for adjoining work that is attached to or supported by cast-in-place concrete. Use setting drawings, templates, diagrams, instructions, and directions furnished with items to be embedded.
   1. Install anchor rods, accurately located, to elevations required and complying with tolerances in Section 7.5 of AISC's "Code of Standard Practice for Steel Buildings and Bridges."
   2. Install dovetail anchor slots in concrete structures as indicated.

3.3 REMOVING AND REUSING FORMS

A. See Section 03 10 00.

3.4 SHORES AND RESHORES

A. See Section 03 10 00.

3.5 VAPOR RETARDERS/BARRIERS

A. See Section 03 05 80.

3.6 STEEL REINFORCEMENT

A. See Section 03 20 00

3.7 JOINTS

A. General: Construct joints true to line with faces perpendicular to surface plane of concrete.

B. Construction Joints: Install so strength and appearance of concrete are not impaired, at locations indicated or as approved by Architect.
1. Place joints perpendicular to main reinforcement. Continue reinforcement across construction joints unless otherwise indicated. Do not continue reinforcement through sides of strip placements of floors and slabs.
2. Form keyed joints as indicated. Embed keys at least 1-1/2 inches into concrete.
3. Locate joints for beams, slabs, joists, and girders in the middle third of spans. Offset joints in girders a minimum distance of twice the beam width from a beam-girder intersection.
4. Locate horizontal joints in walls and columns at underside of floors, slabs, beams, and girders and at the top of footings or floor slabs.
5. Space vertical joints in walls as indicated. Locate joints beside piers integral with walls, near corners, and in concealed locations where possible.
6. Use a bonding agent at locations where fresh concrete is placed against hardened or partially hardened concrete surfaces.
7. Use epoxy-bonding adhesive at locations where fresh concrete is placed against hardened or partially hardened concrete surfaces.

C. Contraction Joints in Slabs-on-Grade: Form weakened-plane contraction joints, sectioning concrete into areas as indicated. Construct contraction joints for a depth equal to at least one-fourth of concrete thickness as follows:
1. Grooved Joints: Form contraction joints after initial floating by grooving and finishing each edge of joint to a radius of 1/8 inch. Repeat grooving of contraction joints after applying surface finishes. Eliminate groover tool marks on concrete surfaces.
2. Sawed Joints: Form contraction joints with power saws equipped with shatterproof abrasive or diamond-rimmed blades. Cut 1/8-inch wide joints into concrete when cutting action will not tear, abrade, or otherwise damage surface and before concrete develops random contraction cracks.

D. Isolation Joints in Slabs-on-Grade: After removing formwork, install joint-filler strips at slab junctions with vertical surfaces, such as column pedestals, foundation walls, grade beams, and other locations, as indicated.

1. Extend joint-filler strips full width and depth of joint, terminating flush with finished concrete surface unless otherwise indicated.
2. Terminate full-width joint-filler strips not less than 1/2 inch or more than 1 inch below finished concrete surface where joint sealants are specified or otherwise indicated.
3. Install joint-filler strips in lengths as long as practicable. Where more than one length is required, lace or clip sections together.

E. Doweled Joints: Install dowel bars and support assemblies at joints where indicated. Lubricate or asphalt coat one-half of dowel length to prevent concrete bonding to one side of joint.

3.8 CONCRETE PLACEMENT

A. Before placing concrete, verify that installation of formwork, reinforcement, and embedded items is complete and that required inspections have been performed.

B. Do not add water to concrete during delivery, at Project site, or during placement unless approved by Architect.

C. Before test sampling and placing concrete, water may be added at Project site, subject to limitations of ACI 301.
   1. Do not add water to concrete after adding high-range water-reducing admixtures to mixture.

D. Deposit concrete continuously in one layer or in horizontal layers of such thickness that no new concrete will be placed on concrete that has hardened enough to cause seams or planes of weakness. If a section cannot be placed continuously, provide construction joints as indicated. Deposit concrete to avoid segregation.
   1. Deposit concrete in horizontal layers of depth to not exceed formwork design pressures and in a manner to avoid inclined construction joints.
   2. Consolidate placed concrete with mechanical vibrating equipment according to ACI 301.
   3. Do not use vibrators to transport concrete inside forms. Insert and withdraw vibrators vertically at uniformly spaced locations to rapidly penetrate placed layer and at least 6 inches into preceding layer. Do not insert vibrators into lower layers of concrete that have begun to lose plasticity. At each insertion, limit duration of vibration to time necessary to consolidate concrete and complete embedment of reinforcement and other embedded items without causing mixture constituents to segregate.

E. Do not permit concrete to drop freely any distance greater than 10’-0” for concrete containing a high range water reducing admixture or 5’-0” for other concrete. Provide chute or tremie to place concrete where longer drops are necessary. Do not place concrete into excavations with standing water. If place of deposit cannot be pumped dry, pour concrete through a tremie with its outlet near the bottom of the place of deposit.

F. Deposit and consolidate concrete for floors and slabs in a continuous operation, within limits of construction joints, until placement of a panel or section is complete.
   1. Consolidate concrete during placement operations so concrete is thoroughly worked around reinforcement and other embedded items and into corners.
   2. Maintain reinforcement in position on chairs during concrete placement.
   3. Screed slab surfaces with a straightedge and strike off to correct elevations.

4. Slope surfaces uniformly to drains where required.
5. Begin initial floating using bull floats or darbies to form a uniform and open-textured surface plane, before excess bleed water appears on the surface. Do not further disturb slab surfaces before starting finishing operations.

G. Cold-Weather Placement: Comply with ACI 306.1 and as follows. Protect concrete work from physical damage or reduced strength that could be caused by frost, freezing actions, or low temperatures.
   1. When average high and low temperature is expected to fall below 40 deg F for three successive days, maintain delivered concrete mixture temperature within the temperature range required by ACI 301.
   2. Do not use frozen materials or materials containing ice or snow. Do not place concrete on frozen subgrade or on subgrade containing frozen materials.
   3. Do not use calcium chloride, salt, or other materials containing antifreeze agents or chemical accelerators unless otherwise specified and approved in mixture designs.

H. Hot-Weather Placement: Comply with ACI 305 and as follows:
   1. Maintain concrete temperature below 90 deg F at time of placement. Chilled mixing water or chopped ice may be used to control temperature, provided water equivalent of ice is calculated to total amount of mixing water. Using liquid nitrogen to cool concrete is Contractor's option.
   2. Fog-spray forms, steel reinforcement, and subgrade just before placing concrete. Keep subgrade uniformly moist without standing water, soft spots, or dry areas.

3.9 FINISHING FORMED SURFACES

A. See Section 03 10 00.

3.10 FINISHING FLOORS AND SLABS

A. General: Comply with ACI 302.1R recommendations for screeding, restraightening, and finishing operations for concrete surfaces. Do not wet concrete surfaces.

B. Scratch Finish (CF-1): While still plastic, texture concrete surface that has been screeded and bull-floated or darbied. Use stiff brushes, brooms, or rakes to produce a profile amplitude of 1/4 inch in one direction.
   1. Apply scratch finish to surfaces indicated and/or to receive concrete floor toppings or to receive mortar setting beds for bonded cementitious floor finishes.

C. Float Finish (CF-2): Consolidate surface with power-driven floats or by hand floating if area is small or inaccessible to power driven floats. Restraighten, cut down high spots, and fill low spots. Repeat float passes and restraightening until surface is left with a uniform, smooth, granular texture.
   1. Apply float finish to surfaces indicated and/or to receive trowel finish and to be covered with fluid-applied or sheet waterproofing, built-up or membrane roofing, or sand-bed terrazzo.

D. Trowel Finish (CF-3): After applying float finish, apply first troweling and consolidate concrete by hand or power-driven trowel. Continue troweling passes and restraighten until surface is free of trowel marks and uniform in texture and appearance. Grind smooth any surface defects that would telegraph through applied coatings or floor coverings.

1. Apply a trowel finish to surfaces indicated and/or exposed to view or to be covered with resilient flooring, carpet, ceramic or quarry tile set over a cleavage membrane, paint, or another thin-film-finish coating system.
2. Finish and measure surface so gap at any point between concrete surface and an unleveled, freestanding, 10-foot- (3.05-m-) long straightedge resting on 2 high spots and placed anywhere on the surface does not exceed **1/4 inch (6 mm)**.

E. Trowel and Fine-Broom Finish (CF-4): Apply a first trowel finish to surfaces indicated or where ceramic or quarry tile is to be installed by either thickset or thin-set method. While concrete is still plastic, slightly scarify surface with a fine broom.
   1. Comply with flatness and levelness tolerances for trowel-finished floor surfaces.

F. Broom Finish (CF-5): Apply a broom finish to exterior concrete platforms, steps, ramps, and elsewhere as indicated.
   1. Immediately after float finishing, slightly roughen trafficked surface by brooming with fiber-bristle broom perpendicular to main traffic route. Coordinate required final finish with Architect before application.

G. Slip-Resistive Finish (CF-6): Before final floating, apply slip-resistive finish where indicated and to concrete stair treads, platforms, and ramps. Apply according to manufacturer's written instructions and as follows:
   1. Uniformly spread 25 lb/100 sq. ft. of dampened slip-resistive granules over surface in one or two applications. Tamp aggregate flush with surface, but do not force below surface.
   2. After broadcasting and tamping, apply float finish.
   3. After curing, lightly work surface with a steel wire brush or an abrasive stone and water to expose slip-resistive granules.

3.11 Concrete Floor Finish Tolerances

A. Floor Elevation Tolerance Envelope:
   1. The acceptable tolerance envelope for absolute elevation of any point on the slab surface, with respect to the elevation shown on the Drawings, is as follows:
      a. Slab-on-Grade, or Slab-on-Void Construction: +/- 3/4"
      b. Top surfaces of formed slabs measured prior to removal of supporting shores: +/- 3/4"
      c. Top surfaces of all other slabs: +/- 3/4"
      d. Slabs specified to slope shall have a tolerance from the specified slope of 3/8" in 10'-0" at any point, up to 3/4" from theoretical elevation at any point.

3.12 MISCELLANEOUS CONCRETE ITEMS

A. Filling In: Fill in holes and openings left in concrete structures after work of other trades is in place unless otherwise indicated. Mix, place, and cure concrete, as specified, to blend with in-place construction. Provide other miscellaneous concrete filling indicated or required to complete the Work.

B. Curbs: Provide monolithic finish to interior curbs by stripping forms while concrete is still green and by steel-troweling surfaces to a hard, dense finish with corners, intersections, and terminations slightly rounded.

C. Equipment Bases and Foundations: Provide machine and equipment bases and foundations as shown on Drawings. Set anchor bolts for machines and equipment at correct elevations, complying with diagrams or templates from manufacturer furnishing machines and equipment.

D. Steel Pan Stairs: Provide concrete fill for steel pan stair treads, landings, and associated items. Cast-in inserts and accessories as shown on Drawings. Screed, tamp, and trowel finish concrete surfaces.

3.13 CONCRETE PROTECTING AND CURING

A. General: Protect freshly placed concrete from premature drying and excessive cold or hot temperatures. Comply with ACI 306.1 for cold-weather protection and ACI 301 for hot-weather protection during curing.

B. Evaporation Retarder: Apply evaporation retarder to unformed concrete surfaces if hot, dry, or windy conditions cause moisture loss approaching 0.2 lb/sq. ft. x h before and during finishing operations. Apply according to manufacturer's written instructions after placing, screeding, and bull floating or darbying concrete, but before float finishing.

C. Formed Surfaces: Cure formed concrete surfaces, including underside of beams, supported slabs, and other similar surfaces. If forms remain during curing period, moist cure after loosening forms. If removing forms before end of curing period, continue curing for the remainder of the curing period.

D. Unformed Surfaces: Begin curing immediately after finishing concrete. Cure unformed surfaces, including floors and slabs, concrete floor toppings, and other surfaces.

E. Cure concrete according to ACI 308.1, by one of the following methods:
   1. Moisture Curing: Keep surfaces continuously moist for not less than seven days with the following materials:
      a. Water, maximum 2” depth.
      b. Continuous water-fog spray.

3.14 LIQUID FLOOR TREATMENTS

A. Penetrating Liquid Floor Treatment: Prepare, apply, and finish penetrating liquid floor treatment according to manufacturers written instructions.
   1. Remove curing compounds, sealers, oil, dirt, laitance, and other contaminants and complete surface repairs.
   2. Do not apply to concrete that is less than 28 days' old.
   3. Apply liquid until surface is saturated, scrubbing into surface until a gel forms; rewet; and repeat brooming or scrubbing. Rinse with water; remove excess material until surface is dry. Apply a second coat in a similar manner if surface is rough or porous.

B. Polished Concrete Floor Treatment: Apply polished concrete finish system to cured and prepared slabs to match accepted mockup.
   1. Machine grind floor surfaces to receive polished finishes level and smooth and to depth required to reveal aggregate to match approved mockup.

2. Apply penetrating liquid floor treatment for polished concrete in polishing sequence and according to manufacturer's written instructions, allowing recommended drying time between successive coats.
3. Continue polishing with progressively finer grit diamond polishing pads to gloss level to match approved mockup.
4. Control and dispose of waste products produced by grinding and polishing operations.
5. Neutralize and clean polished floor surfaces.

C. Sealing Coat: Uniformly apply a continuous sealing coat of curing and sealing compound to hardened concrete by power spray or roller according to manufacturer's written instructions.

3.15 JOINT FILLING

A. Prepare, clean, and install joint filler according to manufacturer's written instructions.
   1. Defer joint filling until concrete has aged at least six month(s). Do not fill joints until construction traffic has permanently ceased.

B. Remove dirt, debris, saw cuttings, curing compounds, and sealers from joints; leave contact faces of joint clean and dry.

C. Install semi-rigid joint filler full depth in saw-cut joints and at least 2 inches deep in formed joints. Overfill joint and trim joint filler flush with top of joint after hardening.

3.16 CONCRETE SURFACE REPAIRS

A. Defective Concrete: Repair and patch defective areas when approved by Architect. Remove and replace concrete that cannot be repaired and patched to Architect's approval.

B. Patching Mortar: Mix dry-pack patching mortar, consisting of one part Portland cement to two and one-half parts fine aggregate passing a No. 16 sieve, using only enough water for handling and placing.

C. Repairing Formed Surfaces: Surface defects include color and texture irregularities, cracks, spalls, air bubbles, honeycombs, rock pockets, fins and other projections on the surface, and stains and other discolorations that cannot be removed by cleaning.
   1. Immediately after form removal, cut out honeycombs, rock pockets, and voids more than 1/2 inch in any dimension to solid concrete. Limit cut depth to 3/4 inch. Make edges of cuts perpendicular to concrete surface. Clean, dampen with water, and brush-coat holes and voids with bonding agent. Fill and compact with patching mortar before bonding agent has dried. Fill form-tie voids with patching mortar or cone plugs secured in place with bonding agent.
   2. Repair defects on surfaces exposed to view by blending white Portland cement and standard Portland cement so that, when dry, patching mortar will match surrounding color. Patch a test area at inconspicuous locations to verify mixture and color match before proceeding with patching. Compact mortar in place and strike off slightly higher than surrounding surface.
   3. Repair defects on concealed formed surfaces that affect concrete's durability and structural performance as determined by Architect.

D. Repairing Unformed Surfaces: Test unformed surfaces, such as floors and slabs, for finish and verify surface tolerances specified for each surface. Correct low and high areas. Test surfaces sloped to drain for trueness of slope and smoothness; use a sloped template.

1. Repair finished surfaces containing defects. Surface defects include spalls, popouts, honeycombs, rock pockets, crazing and cracks in excess of 0.01 inch wide or that penetrate to reinforcement or completely through unreinforced sections regardless of width, and other objectionable conditions.
2. After concrete has cured at least 14 days, correct high areas by grinding.
3. Correct localized low areas during or immediately after completing surface finishing operations by cutting out low areas and replacing with patching mortar. Finish repaired areas to blend into adjacent concrete.
4. Correct other low areas scheduled to receive floor coverings with a repair underlayment. Prepare, mix, and apply repair underlayment and primer according to manufacturer's written instructions to produce a smooth, uniform, plane, and level surface. Feather edges to match adjacent floor elevations.
5. Correct other low areas scheduled to remain exposed with a repair topping. Cut out low areas to ensure a minimum repair topping depth of 1/4 inch to match adjacent floor elevations. Prepare, mix, and apply repair topping and primer according to manufacturer's written instructions to produce a smooth, uniform, plane, and level surface.
6. Repair defective areas, except random cracks and single holes 1 inch or less in diameter, by cutting out and replacing with fresh concrete. Remove defective areas with clean, square cuts and expose steel reinforcement with at least a 3/4-inch clearance all around. Dampen concrete surfaces in contact with patching concrete and apply bonding agent. Mix patching concrete of same materials and mixture as original concrete except without coarse aggregate. Place, compact, and finish to blend with adjacent finished concrete. Cure in same manner as adjacent concrete.
7. Repair random cracks and single holes 1 inch or less in diameter with patching mortar. Groove top of cracks and cut out holes to sound concrete and clean off dust, dirt, and loose particles. Dampen cleaned concrete surfaces and apply bonding agent. Place patching mortar before bonding agent has dried. Compact patching mortar and finish to match adjacent concrete. Keep patched area continuously moist for at least 72 hours.

E. Perform structural repairs of concrete, subject to Architect's approval, using epoxy adhesive and patching mortar.

F. Repair materials and installation not specified above may be used, subject to Architect's approval.

3.17 FIELD QUALITY CONTROL

A. Testing and Inspecting: See Section 01 45 23.

1. Additional testing and inspecting, at Contractor's expense, will be performed to determine compliance of replaced or additional work with specified requirements.
2. Correct deficiencies in the Work that test reports and inspections indicate do not comply with the Contract Documents.

3.18 PROTECTION OF LIQUID FLOOR TREATMENTS

A. Protect liquid floor treatment from damage and wear during the remainder of construction period. Use protective methods and materials, including temporary covering, recommended in writing by liquid floor treatments installer.

END OF SECTION 03 30 00

SECTION 05 12 00 - STRUCTURAL STEEL FRAMING

PART 1 - GENERAL

1.1 RELATED DOCUMENTS

A. Drawings and general provisions of the Contract, including General and Supplementary Conditions and Division 01 Specification Sections, apply to this Section.

1.2 SUMMARY

A. Section Includes:
   1. Structural steel.
   2. Prefabricated building columns.

B. Related Sections:
   1. Section 01 45 23 "Testing and Inspection Services".
   2. Section 05 31 13 "Steel Floor Decking".
   3. Section 05 31 23 "Steel Roof Decking".
   4. Section 05 50 00 "Metal Fabrications".
   5. Section 05 51 00 "Metal Stairs."

1.3 DEFINITIONS

A. Structural Steel: Elements of structural-steel frame, as classified by AISC 303, "Code of Standard Practice for Steel Buildings and Bridges."

B. Seismic-Load-Resisting System: Elements of structural-steel frame designated as "SLRS" or along grid lines designated as "SLRS" on Drawings, including columns, beams, and braces and their connections.

C. Heavy Sections: Rolled and built-up sections as follows:
   1. Shapes included in ASTM A 6 with flanges thicker than 1 1/2 inches.
   2. Welded built-up members with plates thicker than 2 inches.
   3. Column base plates thicker than 2 inches.

D. Protected Zone: Structural members or portions of structural members indicated as "Protected Zone" on Drawings. Connections of structural and nonstructural elements to protected zones are limited.

E. Demand Critical Welds: Those welds, the failure of which would result in significant degradation of the strength and stiffness of the Seismic-Load-Resisting System and which are indicated as "Demand Critical" or "Seismic Critical" on Drawings.

1.4 REFERENCES

A. Comply with applicable provisions of the following specifications and documents: The latest adopted edition of all standards referenced in this section shall apply, unless noted otherwise

1. AISC "Code of Standard Practice for Steel Buildings and Bridges”.
2. AISC "Specification for Structural Steel Buildings," including the "Commentary" and the Supplements thereto, as issued.
3. AISC "Specification for Architecturally Exposed Structural Steel”.
4. AISC's "Seismic Provisions for Structural Steel Buildings”.
5. ASTM A 6 "Specification for General Requirements for Rolled Steel Plates, Shapes, Sheet Piling, and Bars for Structural Use”.
6. AWS D1.1 Structural Welding Code.
7. Research Council on Structural Connections' (RCSC) "Specification for Structural Joints Using ASTM A 325 or A 490 Bolts".
8. Research Council on Structural Connections' (RCSC) "Load and Resistance Factor Design Specification for Structural Joints Using ASTM A 325 or A 490 Bolts”.
9. SSPC (Steel Structures Painting Council), Painting Manuals, Volumes 1 and 2.
10. UL Fire Resistance Directory.

B. In the case of conflict between the Contract Documents and a reference standard, the Contract Documents shall govern. In the case of a conflict between the Contract Documents and the Building Code, the more stringent shall govern.

1.5 PERFORMANCE REQUIREMENTS

A. Delegated Design: Prepare submittal documents including connection design calculations and drawings signed and sealed by registered design professional, licensed in state where project is located, employed by the steel fabricator.

B. Design all structural steel framing connections complying with specified performance:
1. Load Capacity: Resist loads indicated on drawings or resist full capacity of supported framing member if reaction not indicated. Account for connection and member loads and eccentricities.
   a. Request additional design criteria when necessary to complete connection design.
2. Configuration: Design and detail all connections for each member size, steel grade and connection type to resist the loads and reactions indicated on the drawings or specified herein. Use details consistent with details shown on drawings, supplementing where necessary. The details shown on drawings are conceptual and do not indicate the required weld sizes or number of bolts unless specifically noted. Use rational engineering design and standard practice in detailing, accounting for all loads and eccentricities in both the connection and the members. Promptly notify the design professional in charge of any location where the connection design criteria is not clearly indicated. The design of all connections is subject to the review and acceptance of the design professional in charge. Submit structural calculations prepared and sealed by a qualified engineer registered in the state where the project is located. Submit calculations for review before preparation of detail drawing.

1.6 ACTION SUBMITTALS

A. Product Data: For each type of product indicated.

B. Shop Drawings: Show fabrication of structural-steel components.
1. Include details of cuts, connections, splices, camber, holes, and other pertinent data.

2. Include embedment drawings.
3. Indicate welds by standard AWS symbols, distinguishing between shop and field welds, and show size, length, and type of each weld. Show backing bars that are to be removed and supplemental fillet welds where backing bars are to remain.
4. Indicate type, size, and length of bolts, distinguishing between shop and field bolts. Identify pretensioned and slip-critical high-strength bolted connections.
5. Identify members and connections of the seismic-load-resisting system.
6. Indicate locations and dimensions of protected zones.
7. Identify demand critical welds.
8. For structural-steel connections indicated to comply with design loads, include structural analysis data signed and sealed by the qualified professional engineer responsible for their preparation.

C. At full penetration welds, Welding Procedure Specifications (WPSs) and Procedure Qualification Records (PQRs): Provide according to AWS D1.1, "Structural Welding Code - Steel," for each welded joint whether prequalified or qualified by testing, including the following:
   1. Power source (constant current or constant voltage).
   2. Electrode manufacturer and trade name, for demand critical welds.

1.7 INFORMATIONAL SUBMITTALS

A. Submit the following informational submittals:
   1. Qualification Data: For qualified installer, fabricator, and testing agency.
   2. Welding certificates.
   3. Mill test reports for structural steel, including chemical and physical properties.
   4. Product Test Reports: For the following:
      a. Bolts, nuts, and washers including mechanical properties and chemical analysis.
      b. Direct-tension indicators.
      c. Tension-control, high-strength bolt-nut-washer assemblies.
      d. Shear stud connectors.
      e. Shop primers.
   5. Source quality-control reports.
   6. **Delegated Design Drawings and Calculations: Signed and sealed by responsible Engineer.**
      a. **Connection calculations.**

1.8 QUALITY ASSURANCE

A. Fabricator Qualifications: A qualified fabricator that participates in the AISC Quality Certification Program and is designated an AISC-Certified Plant, Category STD.

B. Installer Qualifications: A qualified installer who participates in the AISC Quality Certification Program and is designated an AISC-Certified Erector, Category CSE.

C. Shop-Painting Applicators: Qualified according to AISC's Sophisticated Paint Endorsement P1, P2, or P3 as applicable for exposure or SSPC-QP 3, "Standard Procedure for Evaluating Qualifications of Shop Painting Applicators."

D. Welding Qualifications: Qualify procedures and personnel according to AWS D1.1/D1.1M, "Structural Welding Code - Steel."
   1. Welders and welding operators performing work on bottom-flange, demand-critical welds shall pass the supplemental welder qualification testing, as required by AWS D1.8.

FCAW-S and FCAW-G shall be considered separate processes for welding personnel qualification.

E. Comply with applicable provisions of the following specifications and documents:
   1. AISC 303.
   2. AISC 341 and AISC 341s1.
   3. AISC 360.
   4. RCSC's "Specification for Structural Joints Using ASTM A 325 or A 490 Bolts."

F. Preinstallation Conference: Conduct conference at Project site.

1.9 DELIVERY, STORAGE, AND HANDLING

A. Store materials to permit easy access for inspection and identification. Keep steel members off ground and spaced by using pallets, dunnage, or other supports and spacers. Protect steel members and packaged materials from corrosion and deterioration.
   1. Do not store materials on structure in a manner that might cause distortion, damage, or overload to members or supporting structures. Repair or replace damaged materials or structures as directed.

B. Store fasteners in a protected place in sealed containers with manufacturer's labels intact.
   1. Fasteners may be repackaged provided Owner's testing and inspecting agency observes repackaging and seals containers.
   2. Clean and re-lubricate bolts and nuts that become dry or rusty before use.
   3. Comply with manufacturers' written recommendations for cleaning and lubricating ASTM F 1852 fasteners and for retesting fasteners after lubrication.

1.10 COORDINATION

A. Coordinate selection of shop primers with topcoats to be applied over them. Comply with paint and coating manufacturers' recommendations to ensure that shop primers and topcoats are compatible with one another.

B. Coordinate installation of anchorage items to be embedded in or attached to other construction without delaying the Work. Provide setting diagrams, sheet metal templates, instructions, and directions for installation.

PART 2 - PRODUCTS

2.1 STRUCTURAL-STEEL MATERIALS

A. Recycled Content of Steel Products: Provide products with an average recycled content of steel products so postconsumer recycled content plus one-half of preconsumer recycled content is not less than the following:
   1. W-Shapes: 60 percent.
   2. Channels, Angles, M, S-Shapes: 60 percent.
   3. Plate and Bar: 25 percent.
   4. Cold-Formed Hollow Structural Sections: 25 percent.
   5. Steel Pipe: 25 percent.

6. All Other Steel Materials: 25 percent.

B. W-Shapes: Refer Structural General Notes.

C. Channels, Angles, M, S-Shapes: Refer Structural General Notes.

D. Plate and Bar: Refer Structural General Notes.

E. Corrosion-Resisting Structural-Steel Shapes, Plates, and Bars: ASTM A 588, Grade 50.

F. Cold-Formed Hollow Structural Sections: Refer Structural General Notes.

G. Steel Pipe: Refer Structural General Notes.
   1. Weight Class: See Plans.
   2. Finish: Black except where indicated to be galvanized.

H. Welding Electrodes: Comply with AWS requirements.

2.2 BOLTS, CONNECTORS, AND ANCHORS

A. High-Strength Bolts, Nuts, and Washers: ASTM A 325, Type 1, heavy-hex steel structural bolts.
   1. Direct-Tension Indicators: ASTM F 959, Type 325, compressible-washer type with plain finish.

B. Zinc-Coated High-Strength Bolts, Nuts, and Washers (All bolts located in Crawl Space): ASTM A 325, Type 1, heavy-hex steel structural bolts.
   1. Finish: Hot-dip or mechanically deposited zinc coating.
   2. Direct-Tension Indicators: ASTM F 959, Type 325, compressible-washer type with mechanically deposited zinc coating finish.

C. Tension-Control, High-Strength Bolt-Nut-Washer Assemblies: ASTM F 1852, Type 1, heavy-hex or round head assemblies consisting of steel structural bolts with splined ends, heavy-hex carbon-steel nuts, and hardened carbon-steel washers.
   1. Finish: Plain or Mechanically deposited zinc coating, where required.

D. Shear Connectors: ASTM A 108, Grades 1015 through 1020, headed-stud type, cold-finished carbon steel; AWS D1.1, Type B.

E. Unheaded Anchor Rods: ASTM F 1554, See Anchor Bolt Schedule on Drawings for Grade.
   1. Configuration: Straight.
   2. Nuts: ASTM A 563 heavy-hex carbon steel.
   3. Plate Washers: ASTM A 36 carbon steel.
   4. Washers: ASTM F 436, Type 1, hardened carbon steel.
   5. Finish:
      a. General Condition – Plain
      b. Crawl Space - Hot-dip zinc coating, ASTM A 153, Class C.

F. Clevises and Turnbuckles: Made from cold-finished carbon steel bars, ASTM A 108, Grade 1035.

G. Eye Bolts and Nuts: Made from cold-finished carbon steel bars, ASTM A 108, Grade 1030.

H. Sleeve Nuts: Made from cold-finished carbon steel bars, ASTM A 108, Grade 1018.

I. Structural Slide Bearings: Low-friction assemblies, of configuration indicated, that provide vertical transfer of loads and allow horizontal movement perpendicular to plane of expansion joint while resisting movement within plane of expansion joint.
1. Basis-of-Design Product: Subject to compliance with requirements, provide product indicated on Drawings or comparable product by one of the following:
   a. Amscot Structural Products Corp.
   b. Fluorocarbon Company Limited.
   c. R.J. Watson Bridge & Structural Engineered Systems.
   d. Seismic Energy Products, L.P.
2. Mating Surfaces: PTFE and PTFE or mirror-finished stainless steel.
3. Coefficient of Friction: Not more than 0.05.
4. Design Load: Not less than 5,000 psi .
5. Total Movement Capability: 2 inches.

2.3 PRIMER

A. Low-Emitting Materials: Paints and coatings shall comply with the testing and product requirements of the California Department of Health Services' "Standard Practice for the Testing of Volatile Organic Emissions from Various Sources Using Small-Scale Environmental Chambers."

B. Primer (General): Fabricator's standard lead- and chromate-free, non-asphaltic, rust-inhibiting primer complying with MPI#79 and compatible with topcoat.

C. Primer (Crawl Space Steel): Tnemec Perimeprime Series 394.

D. Galvanizing Repair Paint: SSPC-Paint 20.

E. Exposed miscellaneous steel such as brick angles to be hot dipped galvanized.

F. Exposed steel beams and columns to weather to receive High performance paint, coordinate shop primer and surface rep.

2.4 GROUT

A. Refer Section 03 30 00.

2.5 FABRICATION

A. Structural Steel: Fabricate and assemble in shop to greatest extent possible. Fabricate according to AISC's "Code of Standard Practice for Steel Buildings and Bridges" and AISC 360.
1. Camber structural-steel members where indicated.
2. Fabricate beams with rolling camber up.
3. Identify high-strength structural steel according to ASTM A 6 and maintain markings until structural steel has been erected.
4. Mark and match-mark materials for field assembly.
5. Complete structural-steel assemblies, including welding of units, before starting shop-priming operations.

B. Fabricate and assemble structural steel in shop to greatest extent possible. Fabricate structural steel according to AISC specifications referenced in this Section and in final approved Shop Drawings.
   1. Properly mark and match-mark materials for field assembly. Fabricate for delivery sequence that will expedite erection and minimize field handling of materials.
   2. Where finishing is required, complete assembly, including welding of units, before start of finishing operations. Provide finish surfaces of members exposed in final structure free of markings, burrs, and other effects.
   3. Camber structural steel members where indicated. The camber specified is the camber that is measured in the field with the beam on its side so that the beam weight has no effect. During shipment and handling, cambered members shall be supported in a way that will not result in loss of camber.
   4. Camber tolerance
      a. Beams 50 feet and less; plus or minus 1/2 inch.
      b. Beams greater than 50 feet; plus or minus 1/2 inch, except tolerance can be increased 1/8 inch for each 10 feet or fraction thereof in excess of 50 feet.
      c. Contact engineer for members outside specified camber tolerance. Provide engineer with a list of beam locations and actual measured camber amounts. Submit an engineered shoring plan, if requested, that will allow the beam to deflect to the horizontal position after concrete placement without overloading the framing below.
   5. Complete structural steel assemblies, including welding of units, before starting shop-priming operations.
   6. Comply with fabrication tolerance limits of AISC's "Code of Standard Practice for Steel Buildings and Bridges" for structural steel.

C. Thermal Cutting: Perform thermal cutting by machine to greatest extent possible.
   1. Plane thermally cut edges to be welded to comply with requirements in AWS D1.1.

D. Bolt Holes: Cut, drill, or punch standard bolt holes perpendicular to metal surfaces.

E. Finishing: Accurately finish ends of columns and other members transmitting bearing loads.

F. Cleaning: Clean and prepare steel surfaces that are to remain unpainted according to SSPC-SP 3, "Power Tool Cleaning."

G. Shear Connectors: Prepare steel surfaces as recommended by manufacturer of shear connectors. Use automatic end welding of headed-stud shear connectors according to AWS D1.1 and manufacturer's written instructions.

H. Holes for Other Work: Provide holes required for securing other work to structural steel framing, and for passage of other work through steel framing members, as shown on approved shop drawings.
   1. Provide threaded nuts welded to framing, and other specialty items as indicated to receive other work.
   2. Cut, drill, or punch holes perpendicular to metal surfaces. Do not flame cut holes by burning.

I. Base-Plate Holes: Cut, drill, mechanically thermal cut, or punch holes perpendicular to steel surfaces. Base plates hole sizes for anchor bolts may be oversized to facilitate erection:
   1. Bolts 3/4inch to 7/8 inch diameter: 1/2 inch oversize.
   2. Bolts 1 inch to 1 1/2 inch diameter: 3/4 inch oversize.
   3. Bolts over 1 3/4 inch diameter: 1 inch oversize.

J. Base Plate Washers: Sizes shall be as follows:
1. 3/4 inch diameter Bolts: 2 inch diameter x 1/4 inch thick
2. 7/8 inch diameter Bolts: 2 1/2 inch diameter x 5/16 inch thick
3. 1 inch diameter Bolts: 3 inch diameter x 3/8 inch thick
4. 1 1/4 inch diameter Bolts: 3 inch diameter x 1/2 inch thick
5. 1 1/2 inch diameter Bolts: 3 1/2 inch diameter x 1/2 inch thick
6. 1 3/4 inch diameter Bolts: 4 inch diameter x 5/8 inch thick
7. 2 inch diameter Bolts: 5 inch diameter x 3/4 inch thick

K. Architecturally Exposed Structural Steel (AESS): Fabricate with exposed surfaces smooth, square, and free of surface blemishes, including pitting, rust and scale seam marks, roller marks, rolled trade names, and roughness.
1. Remove blemishes by filling, grinding, or by welding and grinding, prior to cleaning, treating, and shop priming.
2. Comply with fabrication requirements, including tolerance limits, of AISC's "Specification for Architecturally Exposed Structural Steel" for architecturally exposed structural steel.

2.6 SHOP CONNECTIONS

A. High-Strength Bolts: Shop install high-strength bolts according to RCSC's "Specification for Structural Joints Using ASTM A 325 or A 490 Bolts" for type of bolt and type of joint specified.
1. Joint Type: Snug tightened, Pretensioned, or Slip critical as required or indicated on Drawings.

B. Weld Connections: Comply with AWS D1.1 and AWS D1.8, where required, for tolerances, appearances, welding procedure specifications, weld quality, and methods used in correcting welding work.
1. Assemble and weld built-up sections by methods that will maintain true alignment of axes without exceeding tolerances in AISC 303 for mill material.

2.7 SHOP PRIMING

A. Shop prime steel surfaces except the following:
1. Surfaces embedded in concrete or mortar. Extend priming of partially embedded members to a depth of 2 inches.
2. Surfaces to be field welded.
3. Surfaces to be high-strength bolted with slip-critical connections.
4. Surfaces to receive sprayed fire-resistive materials (applied fireproofing) excluding crawl space steel. Crawl space steel shall be primed regardless of whether it is to receive fireproofing.
5. Galvanized surfaces.

B. Surface Preparation: Clean surfaces to be painted. Remove loose rust and mill scale and spatter, slag, or flux deposits. Prepare surfaces according to the following specifications and standards:
1. SSPC-SP 2, "Hand Tool Cleaning."

C. Priming: Immediately after surface preparation, apply primer according to manufacturer's written instructions and at rate recommended by SSPC to provide a minimum dry film thickness of 1.5 mils. Use priming methods that result in full coverage of joints, corners, edges, and exposed surfaces.

D. Apply two coats of shop paint to surfaces that are inaccessible after assembly or erection. Change color of second coat to distinguish it from first.

E. Crawl space steel to be primed to a DFT between 2.5 and 3.5 mils.

F. Painting: Prepare steel and apply a one-coat, non-asphaltic primer complying with SSPC-PS Guide 7.00, "Painting System Guide 7.00: Guide for Selecting One-Coat Shop Painting Systems," to provide a dry film thickness of not less than 1.5 mils.

2.8 GALVANIZING

A. Hot-Dip Galvanized Finish: Apply zinc coating by the hot-dip process to structural steel according to ASTM A 123.
   1. Fill vent and drain holes that will be exposed in the finished Work unless they will function as weep holes, by plugging with zinc solder and filing off smooth.
   2. Galvanize lintels and shelf angles attached to structural steel frame and located in exterior walls.

2.9 SOURCE QUALITY CONTROL

A. Testing Agency: Refer Section 01 45 23.
   1. Provide testing agency with access to places where structural-steel work is being fabricated or produced to perform tests and inspections.

B. Correct deficiencies in Work that test reports and inspections indicate does not comply with the Contract Documents.

PART 3 - EXECUTION

3.1 EXAMINATION

A. Verify, with steel Erector present, elevations of concrete and masonry bearing surfaces and locations of anchor rods, bearing plates, and other embedments for compliance with requirements.
   1. Prepare a certified survey of bearing surfaces, anchor rods, bearing plates, and other embedments showing dimensions, locations, angles, and elevations.

B. Proceed with installation only after unsatisfactory conditions have been corrected.

3.2 PREPARATION

A. Provide temporary shores, guys, braces, and other supports during erection to keep structural steel secure, plumb, and in alignment against temporary construction loads and loads equal in intensity to design loads. Remove temporary supports when permanent structural steel, connections, and bracing are in place unless otherwise indicated.
   1. Do not remove temporary shoring supporting composite deck construction until cast-in-place concrete has attained its design compressive strength.

3.3 ERECTION

A. Set structural steel accurately in locations, to elevations indicated, and according to AISC 303 and AISC 360.

B. Base Bearing and Leveling Plates: Clean concrete- and masonry-bearing surfaces of bond-reducing materials, and roughen surfaces prior to setting plates. Clean bottom surface of plates.
   1. Set plates for structural members on wedges, shims, or setting nuts as required.
   2. Weld plate washers to top of baseplate.
   3. Snug-tighten anchor rods after supported members have been positioned and plumbed. Do not remove wedges or shims but, if protruding, cut off flush with edge of plate before packing with grout.
   4. Promptly pack grout solidly between bearing surfaces and plates so no voids remain. Neatly finish exposed surfaces; protect grout and allow it to cure. Comply with manufacturer's written installation instructions for shrinkage-resistant grouts.

C. Maintain erection tolerances of structural steel within AISC's "Code of Standard Practice for Steel Buildings and Bridges."

D. Align and adjust various members that form part of complete frame or structure before permanently fastening. Before assembly, clean bearing surfaces and other surfaces that will be in permanent contact with members. Perform necessary adjustments to compensate for discrepancies in elevations and alignment.
   1. Level and plumb individual members of structure.
   2. Make allowances for difference between temperature at time of erection and mean temperature when structure is completed and in service.

E. Splice members only where indicated.

F. Do not use thermal cutting during erection unless approved by Engineer. Finish thermally cut sections within smoothness limits in AWS D1.1.

G. Do not enlarge unfair holes in members by burning or using drift pins. Ream holes that must be enlarged to admit bolts.

H. Shear Connectors: Prepare steel surfaces as recommended by manufacturer of shear connectors. Use automatic end welding of headed-stud shear connectors according to AWS D1.1 and manufacturer's written instructions.

3.4 FIELD CONNECTIONS

A. High-Strength Bolts: Install high-strength bolts according to RCSC's "Specification for Structural Joints Using ASTM A 325 Bolts" for type of bolt and type of joint specified.
   1. Joint Type: Snug tightened, Pretensioned, or Slip critical as indicated on Drawings.

B. Weld Connections: Comply with AWS D1.1 and AWS D1.8 for tolerances, appearances, welding procedure specifications, weld quality, and methods used in correcting welding work.
   1. Comply with AISC 303 and AISC 360 for bearing, alignment, adequacy of temporary connections, and removal of paint on surfaces adjacent to field welds.
   2. Remove backing bars or runoff tabs where indicated, back gouge, and grind steel smooth.

3. Assemble and weld built-up sections by methods that will maintain true alignment of axes without exceeding tolerances in AISC's "Code of Standard Practice for Steel Buildings and Bridges" for mill material.

3.5 FIELD QUALITY CONTROL

A. Testing Agency: See Section 01 45 23.

B. Correct deficiencies in Work that test reports and inspections indicate does not comply with the Contract Documents.

3.6 REPAIRS AND PROTECTION

A. Galvanized Surfaces: Clean areas where galvanizing is damaged or missing and repair galvanizing to comply with ASTM A 780.

B. Touchup Painting: Immediately after erection, clean exposed areas where primer is damaged or missing and paint with the same material as used for shop painting to comply with SSPC-PA 1 for touching up shop-painted surfaces.
   1. Clean and prepare surfaces by SSPC-SP 2 hand-tool cleaning or SSPC-SP 3 power-tool cleaning.

END OF SECTION 05 12 00

SECTION 05 21 00 - STEEL OPEN WEB JOIST FRAMING

PART 1 - GENERAL

1.1 RELATED DOCUMENTS

A. Drawings and general provisions of the Contract, including General and Supplementary Conditions and Division 01 Specification Sections, apply to this Section.

1.2 SUMMARY

A. Section Includes:
   1. K-series steel joists.
   2. KCS-type K-series steel joists.
   3. K-series steel joist substitutes.
   4. LH- and DLH-series long-span steel joists.
   5. CJ-series composite steel joists.
   6. Joist girders.
   7. Joist accessories.
      a. Extended ends.
      b. Ceiling extensions.
      c. Bearing plates.
      d. Bridging.
      e. Side wall anchors.

B. Related Requirements:
   1. Section 03 30 00 "Cast-in-Place Concrete".
   2. Section 01 45 23 “Testing and Inspection Services”
   3. Section 04 20 00 "Unit Masonry".
   4. Section 05 12 00 "Structural Steel Framing".
   5. Section 05 31 13 “Steel Floor Decking”.
   6. Section 05 31 23 “Steel Roof Decking”.

1.3 REFERENCES

A. Comply with applicable provisions of the following specifications and documents. The latest adopted edition of all standards referenced in this section shall apply, unless noted otherwise.
   1. AWS D1.1 Structural Welding Code
   2. SJI “Standard Specification Load Tables and Weight Tables for Steel Joists and Joist Girders”.
   3. SDI “Design Manual for Composite Decks, Form Decks, Roof Decks, Cellular Metal Floor Deck with Electrical Distribution”.
   4. SSPC Steel Structures Painting Council Painting Manual.
   5. UL Fire Resistance Directory.
   6. ICBO Product Evaluation Reports.
   7. FM Roof Assembly Classifications.

B. In the case of conflict between the Contract Documents and a reference standard, the Contract Documents shall govern. In the case of a conflict between the Contract Documents and the Building Code, the more stringent shall govern.

1.4 DEFINITIONS

A. SJI's "Specifications": Steel Joist Institute's "Standard Specifications, Load Tables and Weight Tables for Steel Joists and Joist Girders."

B. Special Joists: Steel joists or joist girders requiring modification by manufacturer to support non-uniform, unequal, or special loading conditions that invalidate load tables in SJI's "Specifications."

1.5 ACTION SUBMITTALS

A. Product Data: For each type of joist, accessory, and product.

B. Shop Drawings:
1. Include layout, designation, number, type, location, and spacing of joists.
2. Include joining and anchorage details, bracing, bridging, and joist accessories; splice and connection locations and details; and attachments to other construction.
3. Indicate locations and details of bearing plates to be embedded in other construction.
4. Shop drawings containing special joists shall be submitted with a design load summary for each special joist design. Load summary will be reviewed and returned with the joist submittal. Shop drawings containing special joists submitted without the specified load summary will be returned unchecked as an incomplete submittal. Shop drawings containing special joists shall be signed and sealed by the qualified professional engineer responsible for the design of the joists.

1.6 INFORMATIONAL SUBMITTALS

A. Submit the following informational submittals:
1. Qualification Data: For manufacturer.
2. Welding certificates.
3. Manufacturer certificates.
4. Mill Certificates: For each type of bolt.
5. Comprehensive engineering analysis of special joists signed and sealed by the qualified professional engineer responsible for its preparation.

1.7 QUALITY ASSURANCE

A. Manufacturer Qualifications: A manufacturer certified by SJI to manufacture joists complying with applicable standard specifications and load tables in SJI's "Specifications."
1. Manufacturer's responsibilities include providing professional engineering services for designing special joists to comply with performance requirements.

B. Welding Qualifications: Qualify field-welding procedures and personnel according to AWS D1.1, "Structural Welding Code - Steel."

1.8 DELIVERY, STORAGE, AND HANDLING

A. Deliver, store, and handle joists as recommended in SJI's "Specifications."

B. Protect joists from corrosion, deformation, and other damage during delivery, storage, and handling.

1.9 SEQUENCING

A. Deliver steel bearing plates to be built into cast-in-place concrete and or masonry construction.

PART 2 - PRODUCTS

2.1 PERFORMANCE REQUIREMENTS

A. Structural Performance: Provide special joists and connections capable of withstanding design loads indicated.
   1. Use ASD; data are given at service-load level.
   2. Design special joists to withstand design loads with live-load deflections no greater than the following:
      a. Floor Joists: Vertical deflection of 1/360 of the span.
      b. Roof Joists: Vertical deflection of 1/360 of the span.

B. Recycled Content of Steel Products: Postconsumer recycled content plus one-half of preconsumer recycled content not less than 50 percent.

2.2 MATERIALS

A. Steel: Comply with SJI’s “Specifications” for chord and web members.

2.3 K-SERIES STEEL JOISTS

A. Manufacture steel joists of type indicated according to "Standard Specifications for Open Web Steel Joists, K-Series" in SJI's "Specifications," with steel-angle top- and bottom-chord members, underslung ends, and parallel top chord.
   1. Joist Type: K-series steel joists and KCS-type K-series steel joists.

B. Steel Joist Substitutes: Manufacture according to "Standard Specifications for Open Web Steel Joists, K-Series" in SJI's "Specifications," with steel-angle or -channel members.

C. Provide holes in chord members for connecting and securing other construction to joists.

D. Top-Chord Extensions and Extended Ends: Provide top chord extension or extended ends where shown on plans. Design for load indicated on plans.

E. Camber joists according to SJI's Specifications unless noted otherwise.

F. Equip bearing ends of joists with manufacturer's standard beveled ends or sloped shoes if joist slope exceeds 1/4 inch per 12 inches.

2.4 LONG-SPAN STEEL JOISTS

A. Manufacture steel joists according to "Standard Specifications for Longspan Steel Joists, LH-Series and Deep Longspan Steel Joists, DLH-Series" in SJI's "Specifications," with steel-angle top- and bottom-chord members; of joist type and end and top-chord arrangements as indicated on plan.
   1. Joist Type: Refer to Drawings.
   2. End Arrangement: Refer to Drawings.
   3. Top-Chord Arrangement: Refer to Drawings.

B. Provide holes in chord members for connecting and securing other construction to joists.

C. Camber long-span steel joists according to SJI's Specifications unless noted otherwise.

D. Equip bearing ends of joists with manufacturer's standard beveled ends or sloped shoes if joist slope exceeds 1/4 inch per 12 inches.

2.5 JOIST GIRDERS

A. Manufacture joist girders according to "Standard Specifications for Joist Girders" in SJI's "Specifications," with steel-angle top- and bottom-chord members; with end and top-chord arrangements as indicated on plan.
   1. End Arrangement: Refer to Drawings.
   2. Top-Chord Arrangement: Refer to Drawings.

B. Provide holes in chord members for connecting and securing other construction to joist girders.

C. Camber joist girders according to SJI's Specifications unless noted otherwise.

D. Equip bearing ends of joists with manufacturer's standard beveled ends or sloped shoes if joist slope exceeds 1/4 inch per 12 inches.

2.6 PRIMERS

A. Low-Emitting Materials: Paints and coatings shall comply with the testing and product requirements of the California Department of Health Services' "Standard Practice for the Testing of Volatile Organic Emissions from Various Sources Using Small-Scale Environmental Chambers."

B. Primer: SSPC-Paint 15, or manufacturer's standard shop primer complying with performance requirements in SSPC-Paint 15.

2.7 JOIST ACCESSORIES

A. Bridging: Provide bridging anchors and number of rows of horizontal or diagonal bridging of material, size, and type required by SJI's "Specifications" and "Standard Specifications for

Composite Steel Joists, CJ-Series" in "Standard Specifications for Composite Steel Joists, Weight Tables and Bridging Tables, Code of Standard Practice" for type of joist, chord size, spacing, and span. Furnish additional erection bridging if required for stability.

B. Fabricate steel bearing plates from ASTM A 36/A 36M steel with integral anchorages of sizes and thicknesses indicated. Shop prime paint for interior exposure or Hot-dip zinc coat according to ASTM A 123/A 123M for exterior or weather exposure.

C. Furnish ceiling extensions (where indicated), either extended bottom-chord elements or a separate extension unit of enough strength to support ceiling construction. Extend ends to within 1/2 inch of finished wall surface unless otherwise indicated.

D. Carbon-Steel Bolts and Threaded Fasteners: ASTM A 307, Grade A, carbon-steel, hex-head bolts and threaded fasteners; carbon-steel nuts; and flat, unhardened steel washers.
   1. Finish: Plain, uncoated.

E. High-Strength Bolts, Nuts, and Washers: ASTM A 325, Type 1, heavy hex steel structural bolts; ASTM A 563 heavy hex carbon-steel nuts; and ASTM F 436 hardened carbon-steel washers.
   1. Finish: Plain.

F. Welding Electrodes: Comply with AWS standards.

G. Galvanizing Repair Paint: ASTM A 780.

H. Furnish miscellaneous accessories including splice plates and bolts required by joist manufacturer to complete joist assembly.

2.8 CLEANING AND SHOP PAINTING

A. Clean and remove loose scale, heavy rust, and other foreign materials from fabricated joists and accessories by hand-tool cleaning, SSPC-SP 2 or power-tool cleaning, SSPC-SP 3.

B. Do not prime paint joists and accessories to receive sprayed fire-resistive materials.

C. Apply one coat of shop primer to joists and joist accessories to be primed to provide a continuous, dry paint film not less than 2 mil thick.

PART 3 - EXECUTION

3.1 EXAMINATION

A. Examine supporting substrates, embedded bearing plates, and abutting structural framing for compliance with requirements for installation tolerances and other conditions affecting performance.

B. Proceed with installation only after unsatisfactory conditions have been corrected.

3.2 INSTALLATION

A. Do not install joists until supporting construction is in place and secured.

B. Install joists and accessories plumb, square, and true to line; securely fasten to supporting construction according to SJI's "Specifications", "Standard Specifications for Composite Steel Joists, CJ-Series" in "Standard Specifications for Composite Steel Joists, Weight Tables and Bridging Tables, Code of Standard Practice," joist manufacturer's written recommendations, and requirements in this Section.
   1. Before installation, splice joists delivered to Project site in more than one piece.
   2. Space, adjust, and align joists accurately in location before permanently fastening.
   3. Install temporary bracing and erection bridging, connections, and anchors to ensure that joists are stabilized during construction.
   4. Delay rigidly connecting bottom-chord extensions to columns or supports until dead loads are applied.

C. Field weld joists to supporting steel bearing plates and framework as indicated on Drawings. Coordinate welding sequence and procedure with placement of joists. Comply with AWS requirements and procedures for welding, appearance, and quality of welds, and methods used in correcting welding work.

D. Bolt joists to supporting steel framework using high-strength structural bolts as indicated on Drawings. Comply with Research Council on Structural Connection's "Specification for Structural Joints Using ASTM A 325 or ASTM A 490 Bolts" for high-strength structural bolt installation and tightening requirements.

E. Install and connect bridging concurrently with joist erection, before construction loads are applied. Anchor ends of bridging lines at top and bottom chords if terminating at walls or beams.

3.3 FIELD QUALITY CONTROL

A. Testing Agency: See Section 01 45 23.

3.4 REPAIR AND PROTECTION

A. Repair damaged galvanized coatings on galvanized items with galvanized repair paint according to ASTM A 780 and manufacturer's written instructions.

B. Touchup Painting: After installation, promptly clean, prepare, and prime or reprime field connections, rust spots, and abraded surfaces of prime-painted joists, bearing plates, abutting structural steel, and accessories.
   1. Clean and prepare surfaces by hand-tool cleaning according to SSPC-SP 2, or power-tool cleaning according to SSPC-SP 3.
   2. Apply a compatible primer of same type as primer used on adjacent surfaces.

C. Provide final protection and maintain conditions, in a manner acceptable to manufacturer and Installer, that ensure that joists and accessories are without damage or deterioration at time of Substantial Completion.

END OF SECTION 05 21 00

SECTION 05 31 13 - STEEL FLOOR DECKING

PART 1 - GENERAL

1.1 RELATED DOCUMENTS

A. Drawings and general provisions of the Contract, including General and Supplementary Conditions and Division 01 Specification Sections, apply to this Section.

1.2 SUMMARY

A. Section Includes:
  1. Composite floor deck.
  2. Electrified cellular floor deck.
  3. Noncomposite form deck.
  4. Noncomposite vented form deck.

B. Related Requirements:
  1. Section 01 45 23 “Structural Testing and Inspection Services”.
  2. Section 03 30 00 "Cast-in-Place Concrete".
  3. Section 05 12 00 "Structural Steel Framing".
  4. Section 05 21 00 “Steel Open Web Joist Framing”
  5. Section 05 50 00 "Metal Fabrications".

1.3 REFERENCES

A. Comply with applicable provisions of the following specifications and documents. The latest adopted edition of all standards referenced in this section shall apply, unless noted otherwise.
  1. AWS D1.1 - Structural Welding Code
  2. AWS D1.3 – Structural Welding Code – Sheet Steel
  3. SDI – Design Manual for Composite Decks, Form Decks, Roof Decks, Cellular Metal Floor Deck with Electrical Distribution.
  4. SSPC – Painting Manual
  5. UL – Fire Resistance Directory
  6. ICBO – Product Evaluation Reports

1.4 ACTION SUBMITTALS

A. Product Data: For each type of deck, accessory, and product indicated.

B. Shop Drawings:
  1. Include layout and types of deck panels, anchorage details, reinforcing channels, pans, cut deck openings, special jointing, accessories, and attachments to other construction.

1.5 INFORMATIONAL SUBMITTALS

A. Submit the following informational submittals:
   1. Welding certificates.
   2. Product Certificates: For each type of steel deck.
   3. Product Test Reports: Based on evaluation of comprehensive tests performed by a qualified testing agency, indicating that each of the following complies with requirements:
   4. Power-actuated mechanical fasteners.
   5. Evaluation Reports: For steel deck.
   6. Field quality-control reports.

1.6 QUALITY ASSURANCE

A. Testing Agency Qualifications: Refer Section 01 45 23.

B. Welding Qualifications: Qualify procedures and personnel according to AWS D1.3, "Structural Welding Code - Sheet Steel."

1.7 DELIVERY, STORAGE, AND HANDLING

A. Protect steel deck from corrosion, deformation, and other damage during delivery, storage, and handling.

B. Stack steel deck on platforms or pallets and slope to provide drainage. Protect with a waterproof covering and ventilate to avoid condensation.

PART 2 - PRODUCTS

2.1 PERFORMANCE REQUIREMENTS

A. AISI Specifications: Comply with calculated structural characteristics of steel deck according to AISI's "North American Specification for the Design of Cold-Formed Steel Structural Members."

B. Fire-Resistance Ratings: Comply with ASTM E 119; testing by a qualified testing agency. Identify products with appropriate markings of applicable testing agency.
   1. Indicate design designations from UL's "Fire Resistance Directory" or from the listings of another qualified testing agency.

C. Recycled Content of Steel Products: Postconsumer recycled content plus one-half of preconsumer recycled content not less than 25 percent.

D. Low-Emitting Materials: Paints and coatings shall comply with the testing and product requirements of the California Department of Health Services' "Standard Practice for the Testing of Volatile Organic Emissions from Various Sources Using Small-Scale Environmental Chambers."

2.2 COMPOSITE FLOOR DECK

A. Manufacturers: Subject to compliance with requirements, provide products by one of the following:
   1. ASC Profiles, Inc.; a Blue Scope Steel company.
   2. Canam United States; Canam Group Inc.
   3. CMC Joist & Deck.
   4. Consolidated Systems, Inc.; Metal Dek Group.
   5. Cordeck.
   6. DACS, Inc.
   7. Epic Metals Corporation.
   8. Marlyn Steel Decks, Inc.
   9. New Millennium Building Systems, LLC.
   10. Nucor Corp.; Vulcraft Group.
   11. Roof Deck, Inc.
   12. Verco Manufacturing Co.
   13. Wheeling Corrugating Company; Div. of Wheeling-Pittsburgh Steel Corporation.

B. Composite Floor Deck: Fabricate panels, with integrally embossed or raised pattern ribs and interlocking side laps, to comply with "SDI Specifications and Commentary for Composite Steel Floor Deck," in SDI Publication No. 31, with the minimum section properties indicated, and with the following:
   1. Galvanized-Steel Sheet: As indicated in Structural General Notes.
   2. Profile Depth: As indicated on plan.
   3. Design Uncoated-Steel Thickness: As indicated in Structural General Notes.
   4. Span Condition: Triple span or more.

2.3 ELECTRIFIED CELLULAR FLOOR DECK

A. Manufacturers: Subject to compliance with requirements, provide products by one of the following:

B. Basis-of-Design Product: Subject to compliance with requirements, provide product indicated on Drawings or comparable product by one of the following:
   1. CMC Joist & Deck.
   2. Consolidated Systems, Inc.; Metal Dek Group.
   3. Cordeck.
   4. HH Robertson Floor Systems; a CENTRIA company.
   5. Marlyn Steel Decks, Inc.
   6. New Millennium Building Systems, LLC.
   7. Nucor Corp.; Vulcraft Group.
   8. Verco Manufacturing Co.
   9. Wheeling Corrugating Company; Div. of Wheeling-Pittsburgh Steel Corporation.

C. Source Limitations for Electrified Cellular Floor Deck: Obtain cellular floor-deck units and compatible electrical components, such as preset inserts, activation kits, afterset inserts, service fittings, header ducts, and trench header ducts, from single manufacturer.

D. Electrified Cellular Floor Deck: Fabricate steel-sheet cellular floor-deck panels, consisting of a ribbed top section welded to a lower flat-bottom sheet with interlocking side laps, to comply with "SDI Specifications and Commentary for Composite Steel Floor Deck" in SDI Publication No. 31. Fabricate deck to the minimum section properties, width of panel, number and area of cells per panel indicated, and the following:
1. Cellular Deck Type: Composite.
2. Galvanized-Steel Sheet: ASTM A 653, Structural Steel (SS), Grade 33, G90 zinc coating.
3. Profile Depth: As indicated on plan.
4. Design Uncoated-Steel Thicknesses; Deck Unit/Bottom Plate: As indicated in Structural General Notes.
5. Span Condition: Triple span or more.
6. Factory punch holes, of size and arrangement indicated, into each deck cell at preset inserts and header duct locations.

2.4 NONCOMPOSITE FORM DECK

A. Manufacturers: Subject to compliance with requirements, provide products by one of the following:
1. ASC Profiles, Inc.; a Blue Scope Steel company.
2. Canam United States; Canam Group Inc.
3. CMC Joist & Deck.
4. Consolidated Systems, Inc.; Metal Dek Group.
5. Cordeck.
6. DACS, Inc.
7. Marlyn Steel Decks, Inc.
8. New Millennium Building Systems, LLC.
9. Nucor Corp.; Vulcraft Group.
10. Roof Deck, Inc.
11. Valley Joist; Subsidiary of EBSCO Industries, Inc.
12. Verco Manufacturing Co.
13. Wheeling Corrugating Company; Div. of Wheeling-Pittsburgh Steel Corporation.

B. Noncomposite Form Deck: Fabricate ribbed-steel sheet non-composite form-deck panels to comply with "SDI Specifications and Commentary for Noncomposite Steel Form Deck," in SDI Publication No. 31, with the minimum section properties indicated, and with the following:
1. Prime-Painted Steel Sheet: ASTM A 1008, Structural Steel (SS), Grade 80 minimum, with top and underside surface shop primed with manufacturer's standard baked-on, rust-inhibitive primer.
   a. Color: Manufacturer's standard Gray.
2. Galvanized-Steel Sheet: ASTM A 653, Structural Steel (SS), Grade 80, G90 zinc coating.
3. Profile Depth: As indicated on Plan.
4. Design Uncoated-Steel Thickness: As indicated in Structural General Notes.
5. Span Condition: Triple span or more.
6. Side Laps: Overlapped or interlocking seam at Contractor's option.

2.5 NONCOMPOSITE VENTED FORM DECK

A. Manufacturers: Subject to compliance with requirements, provide products by one of the following:
   1. ASC Profiles, Inc.; a Blue Scope Steel company.
   2. Canam United States; Canam Group Inc.
   3. CMC Joist & Deck.
   4. Consolidated Systems, Inc.; Metal Dek Group.
   5. Marlyn Steel Decks, Inc.
   6. New Millennium Building Systems, LLC.
   7. Nucor Corp.; Vulcraft Group.
   8. Roof Deck, Inc.
   9. Verco Manufacturing Co.
   10. Wheeling Corrugating Company; Div. of Wheeling-Pittsburgh Steel Corporation.

B. Noncomposite Vented Form Deck: Fabricate ribbed- and vented-steel sheet noncomposite form-deck panels to comply with "SDI Specifications and Commentary for Noncomposite Steel Form Deck," in SDI Publication No. 31, and with the following:
   1. Galvanized-Steel Sheet: ASTM A 653, Structural Steel (SS), Grade 80, G60 zinc coating.
   2. Profile Depth: As indicated on Plan.
   3. Design Uncoated-Steel Thickness: As indicated in Structural General Notes.
   4. Span Condition: Triple span or more.
   5. Side Laps: Overlapped or interlocking seam at Contractor's option.
   6. Vent Slot Area: Manufacturer's standard vent slots providing 1.5 percent open area.

2.6 ACCESSORIES

A. General: Provide manufacturer's standard accessory materials for deck that comply with requirements indicated.

B. Mechanical Fasteners: Corrosion-resistant, low-velocity, power-actuated or pneumatically driven carbon-steel fasteners; or self-drilling, self-threading screws.

C. Side-Lap Fasteners: Corrosion-resistant, hexagonal washer head; self-drilling, carbon-steel screws, No. 10 minimum diameter.

D. Flexible Closure Strips: Vulcanized, closed-cell, synthetic rubber.

E. Miscellaneous Sheet Metal Deck Accessories: Steel sheet, minimum yield strength of 33,000 psi, not less than 0.0359-inch design uncoated thickness, of same material and finish as deck; of profile indicated or required for application.

F. Pour Stops and Girder Fillers: Steel sheet, minimum yield strength of 33,000 psi, of same material and finish as deck, and of thickness and profile recommended by SDI Publication No. 31 for overhang and slab depth unless otherwise indicated on Drawings.

G. Column Closures, End Closures, Z-Closures, and Cover Plates: Steel sheet, of same material, finish, and thickness as deck unless otherwise indicated.

H. Piercing Hanger Tabs: Piercing steel sheet hanger attachment devices for use with floor deck.

I. Weld Washers: Uncoated steel sheet, shaped to fit deck rib, 0.0598 inch thick, with factory-punched hole of 3/8-inch minimum diameter.

J. Flat Sump Plates: Single-piece steel sheet, 0.0747 inch thick, of same material and finish as deck. For drains, cut holes in the field.

K. Recessed Sump Pans: Single-piece steel sheet, 0.0747 inch thick, of same material and finish as deck, with 3-inch wide flanges and sloped recessed pans of 1-1/2-inch minimum depth. For drains, cut holes in the field.

L. Galvanizing Repair Paint: ASTM A 780.

M. Repair Paint: Manufacturer's standard rust-inhibitive primer of same color as primer.

PART 3 - EXECUTION

3.1 EXAMINATION

A. Examine supporting frame and field conditions for compliance with requirements for installation tolerances and other conditions affecting performance.

B. Proceed with installation only after unsatisfactory conditions have been corrected.

3.2 INSTALLATION, GENERAL

A. Install deck panels and accessories according to applicable specifications and commentary in SDI Publication No. 31, manufacturer's written instructions, and requirements in this Section.

B. Install temporary shoring before placing deck panels if required to meet deflection limitations.

C. Locate deck bundles to prevent overloading of supporting members.

D. Place deck panels on supporting frame and adjust to final position with ends accurately aligned and bearing on supporting frame before being permanently fastened. Do not stretch or contract side-lap interlocks.
   1. Align cellular deck panels over full length of cell runs and align cells at ends of abutting panels.

E. Place deck panels flat and square and fasten to supporting frame without warp or deflection.

F. Cut and neatly fit deck panels and accessories around openings and other work projecting through or adjacent to deck.

G. Provide additional reinforcement and closure pieces at openings as required for strength, continuity of deck, and support of other work.

H. Comply with AWS requirements and procedures for manual shielded metal arc welding, appearance and quality of welds, and methods used for correcting welding work.

I. Mechanical fasteners may be used in lieu of welding to fasten deck. Locate mechanical fasteners and install according to deck manufacturer's written instructions.

3.3 FLOOR-DECK INSTALLATION

A. Fasten floor-deck panels to steel supporting members by arc spot (puddle) welds of the surface diameter indicated and as follows:
1. Weld Diameter: 3/4 inch, nominal.
2. Weld Spacing: Space and locate welds as indicated on Drawings.
3. Weld Washers: Install weld washers at each weld location where deck is 22 gage or less.

B. Side-Lap and Perimeter Edge Fastening: Fasten side laps and perimeter edges of panels between supports, at intervals not exceeding the lesser of half of the span or 36 inches, and as follows:
1. Mechanically fasten with self-drilling, No. 10 diameter or larger, carbon-steel screws.
2. Mechanically clinch or button punch only with concrete filled decks.
3. Fasten with a minimum of 1-1/2-inch- long welds.

C. End Bearing: Install deck ends over supporting frame with a minimum end bearing of 1-1/2 inches, with end joints as follows:
1. End Joints: Butted.

D. Pour Stops and Girder Fillers: Weld steel sheet pour stops and girder fillers to supporting structure according to SDI recommendations unless otherwise indicated.

E. Revise "Floor-Deck Closures" Paragraph below to suit Project. Sealing cellular deck openings, butt joints, and junctions with trench headers with tape is not included in this Section. Floor-Deck Closures: Weld steel sheet column closures, cell closures, and Z-closures to deck, according to SDI recommendations, to provide tight-fitting closures at open ends of ribs and sides of deck.

F. Electrified Cellular Floor Deck: Install cellular floor system with deck assembled from units indicated.
1. Coordinate layout and installation of trench headers, preset inserts, duct fittings, and other components specified in Section 260539 "Underfloor Raceways for Electrical Systems" with installation of electrified cellular metal floor deck.

G. Install piercing hanger tabs at 14 inches apart in both directions, within 9 inches of walls at ends, and not more than 12 inches from walls at sides unless otherwise indicated.

3.4 COMPOSITE FLOOR DECK INSTALLATION

A. The composite steel deck shall be connected to the supporting steel beams by welding the shear/headed stud connectors through the deck as indicated in the drawings. Contractor to verify the attachment of the deck to the supporting member after the headed stud is welded. Improper amperage may cause burn through around the stud and the deck may not be adequately attached to the supporting deck.

B. Where shear/headed stud connectors are not specified, the metal deck shall be attached to the supporting steel with 3/4-inch diameter puddle welds at a maximum spacing of 12 inches.

C. Where the specified shear/headed stud connector spacing exceeds 12 inches, provide 3/4-inch diameter puddle welds between shear/headed stud connectors to maintain a maximum deck connection of 12 inches.

D. Where deck units abut side to side or end to end over a supporting member provide 3/4-inch diameter puddle welds on each deck unit at a maximum spacing of 12 inches.

E. Shear/Headed Stud Connectors: Field weld shear/headed stud connectors through deck to supporting frame according to AWS D1.1 and manufacturer’s written instructions. Located connectors as indicated in the drawings. Remove and discard arc shields after welding shear/headed stud connectors.

3.5 DECK AND FLOOR DEFLECTION

A. The metal deck is designed to deflect up to 3/4-inch.

B. Uncambered steel beams are designed to be within code required deflection limits (Span/240). Cambered steel beams are designed to have a final deflected shape of less than 1/2-inch. Due to field tolerances and camber tolerances, these design limits may be slightly exceeded.

C. The contractor shall account for any additional concrete required due to these deflected shape tolerances.

3.6 FIELD QUALITY CONTROL

A. Testing Agency: Refer Section 01 45 23.

B. Remove and replace work that does not comply with specified requirements.

C. Additional inspecting, at Contractor's expense, will be performed to determine compliance of corrected work with specified requirements.

3.7 PROTECTION

A. Galvanizing Repairs: Prepare and repair damaged galvanized coatings on both surfaces of deck with galvanized repair paint according to ASTM A 780 and manufacturer's written instructions.

B. Repair Painting: Wire brush and clean rust spots, welds, and abraded areas on both surfaces of prime-painted deck immediately after installation, and apply repair paint.
   1. Apply repair paint, of same color as adjacent shop-primed deck, to bottom surfaces of deck exposed to view.

C. Provide final protection and maintain conditions to ensure that steel deck is without damage or deterioration at time of Substantial Completion.

END OF SECTION 05 31 13

SECTION 05 31 23 - STEEL ROOF DECKING

PART 1 - GENERAL

1.1 RELATED DOCUMENTS

A. Drawings and general provisions of the Contract, including General and Supplementary Conditions and Division 01 Specification Sections, apply to this Section.

1.2 SUMMARY

A. Section Includes:
   1. Roof deck.
   2. Acoustical roof deck.
   3. Noncomposite vented roof deck.

B. Related Requirements:
   1. Section 01 45 23 “Structural Testing and Inspection Services”
   2. Section 05 12 00 "Structural Steel Framing".
   3. Section 05 50 00 "Metal Fabrications".

1.3 REFERENCES

A. Comply with applicable provisions of the following specifications and documents. The latest adopted edition of all standard referenced in this section shall apply, unless noted otherwise.
   1. AWS D1.1 – Structural Welding Code
   2. AWS D1.3 – Structural Welding Code – Sheet Steel
   3. SDI – Design Manual
   4. SSPC – Painting Manual
   5. UL – Fire Resistance Directory
   6. ICBO – Product Evaluation Reports
   7. FM – Roof Assembly Classifications

B. In the case of conflict between the Contract Documents and a referenced standard, the Contract Documents shall govern. In the case of a conflict between the Contract Documents and the Building Code, the more stringent shall govern.

1.4 ACTION SUBMITTALS

A. Product Data: For each type of deck, accessory, and product indicated.

B. Shop Drawings:
   1. Include layout and types of deck panels, anchorage details, reinforcing channels, pans, cut deck openings, special jointing, accessories, and attachments to other construction.

1.5 INFORMATIONAL SUBMITTALS

A. Welding certificates.

B. Product Certificates: For each type of steel deck.

C. Product Test Reports: Based on evaluation of comprehensive tests performed by a qualified testing agency, indicating that each of the following complies with requirements:
   1. Power-actuated mechanical fasteners.
   2. Acoustical roof deck.

D. Evaluation Reports: For steel deck.

E. Field quality-control reports.

1.6 QUALITY ASSURANCE

A. Testing Agency Qualifications: Refer Section 01 45 23.

B. Welding Qualifications: Qualify procedures and personnel according to AWS D1.3, "Structural Welding Code - Sheet Steel."

C. FM Global Listing: Provide steel roof deck evaluated by FM Global and listed in its "Approval Guide, Building Materials" for Class 1 fire rating and Class 1-90 windstorm ratings.

1.7 DELIVERY, STORAGE, AND HANDLING

A. Protect steel deck from corrosion, deformation, and other damage during delivery, storage, and handling.

B. Stack steel deck on platforms or pallets and slope to provide drainage. Protect with a waterproof covering and ventilate to avoid condensation.
   1. Protect and ventilate acoustical cellular roof deck with factory-installed insulation to maintain insulation free of moisture.

PART 2 - PRODUCTS

2.1 PERFORMANCE REQUIREMENTS

A. AISI Specifications: Comply with calculated structural characteristics of steel deck according to AISI's "North American Specification for the Design of Cold-Formed Steel Structural Members."

B. Fire-Resistance Ratings: Comply with ASTM E 119; testing by a qualified testing agency. Identify products with appropriate markings of applicable testing agency.
   1. Indicate design designations from UL's "Fire Resistance Directory" or from the listings of another qualified testing agency.

C. Recycled Content of Steel Products: Postconsumer recycled content plus one-half of preconsumer recycled content not less than 25 percent.

D. Low-Emitting Materials: Paints and coatings shall comply with the testing and product requirements of the California Department of Health Services' "Standard Practice for the Testing of Volatile Organic Emissions from Various Sources Using Small-Scale Environmental Chambers."

2.2 ROOF DECK

A. Manufacturers: Subject to compliance with requirements, provide products by one of the following:
1. ASC Profiles, Inc.; a Blue Scope Steel company.
2. Canam United States; Canam Group Inc.
3. CMC Joist & Deck.
4. Consolidated Systems, Inc.; Metal Dek Group.
5. Cordeck.
6. DACS, Inc.
7. Epic Metals Corporation.
8. Marlyn Steel Decks, Inc.
9. New Millennium Building Systems, LLC.
10. Nucor Corp.; Vulcraft Group.
11. Roof Deck, Inc.
12. Valley Joist; Subsidiary of EBSCO Industries, Inc.
13. Verco Manufacturing Co.
14. Wheeling Corrugating Company; Div. of Wheeling-Pittsburgh Steel Corporation.

B. Roof Deck: Fabricate panels, without top-flange stiffening grooves, to comply with "SDI Specifications and Commentary for Steel Roof Deck," in SDI Publication No. 31, and with the following:
1. Prime-Painted Steel Sheet: ASTM A 1008, Structural Steel (SS), Grade 40 minimum, shop primed with manufacturer's standard baked-on, rust-inhibitive primer.
   a. Color: Manufacturer's standard.
2. Galvanized-Steel Sheet: ASTM A 653, Structural Steel (SS), Grade 40, G60 zinc coating.
3. Galvanized and Shop-Primed Steel Sheet: ASTM A 653, Structural Steel (SS), Grade 40, G60 zinc coating; cleaned, pretreated, and primed with manufacturer's standard baked-on, rust-inhibitive primer.
   a. Color: Manufacturer's standard.
4. Deck Profile: As indicated on plan.
5. Profile Depth: As indicated on plan.
6. Design Uncoated-Steel Thickness: As indicated in Structural General Notes.
7. Span Condition: Triple span or more.
8. Side Laps: Overlapped or interlocking seam at Contractor's option.

2.3 ACOUSTICAL ROOF DECK

A. Manufacturers: Subject to compliance with requirements, provide products by one of the following:
1. ASC Profiles, Inc.; a Blue Scope Steel company.
2. Canam United States; Canam Group Inc.
3. CMC Joist & Deck.
4. Consolidated Systems, Inc.; Metal Dek Group.

5. Cordeck.
6. DACS, Inc.
7. Epic Metals Corporation.
8. Marlyn Steel Decks, Inc.
9. New Millennium Building Systems, LLC.
10. Nucor Corp.; Vulcraft Group.
11. Roof Deck, Inc.
12. Wheeling Corrugating Company; Div. of Wheeling-Pittsburgh Steel Corporation.

B. Acoustical Roof Deck: Fabricate panels, without top-flange stiffening grooves, to comply with "SDI Specifications and Commentary for Steel Roof Deck," in SDI Publication No. 31, and with the following:
1. Prime-Painted Steel Sheet: ASTM A 1008, Structural Steel (SS), Grade 40 minimum, shop primed with manufacturer's standard baked-on, rust-inhibitive primer.
    a. Color: Manufacturer's standard.
2. Galvanized-Steel Sheet: ASTM A 653, Structural Steel (SS), Grade 40, G60 zinc coating.
3. Deck Profile: As indicated in Structural General Notes.
4. Cellular Deck Profile: As indicated in Structural General Notes.
5. Profile Depth: As indicated in Structural General Notes.
6. Design Uncoated-Steel Thickness: As indicated in Structural General Notes.
7. Design Uncoated-Steel Thicknesses; Deck Unit/Bottom Plate: As indicated in Structural General Notes.
8. Span Condition: Triple span or more.
9. Side Laps: Overlapped or interlocking seam at Contractor's option.
10. Acoustical Perforations: Deck units with manufacturer's standard perforated vertical webs.
11. Sound-Absorbing Insulation: Manufacturer's standard pre-molded roll or strip of glass or mineral fiber.
    a. Factory install sound-absorbing insulation into cells of cellular deck.

2.4 NONCOMPOSITE VENTED ROOF DECK

A. Manufacturers: Subject to compliance with requirements, provide products by one of the following:
1. ASC Profiles, Inc.; a Blue Scope Steel company.
2. Canam United States; Canam Group Inc.
3. CMC Joist & Deck.
4. Consolidated Systems, Inc.; Metal Dek Group.
5. Marlyn Steel Decks, Inc.
6. New Millennium Building Systems, LLC.
7. Nucor Corp.; Vulcraft Group.
8. Roof Deck, Inc.
9. Verco Manufacturing Co.
10. Wheeling Corrugating Company; Div. of Wheeling-Pittsburgh Steel Corporation.

B. Noncomposite Vented Roof Deck: Fabricate ribbed- and vented-steel sheet noncomposite form-deck panels to comply with "SDI Specifications and Commentary for Noncomposite Steel Form Deck," in SDI Publication No. 31, and with the following:
1. Galvanized-Steel Sheet: ASTM A 653, Structural Steel (SS), Grade 40, G60 zinc coating.
2. Profile Depth: As indicated in Structural General Notes.
3. Design Uncoated-Steel Thickness: As indicated in Structural General Notes.

4. Span Condition: Triple span or more.
5. Side Laps: Overlapped or interlocking seam at Contractor's option.
6. Vent Slot Area: Manufacturer's standard vent slots providing 1-1/2.

2.5 ACCESSORIES

A. General: Provide manufacturer's standard accessory materials for deck that comply with requirements indicated.

B. Mechanical Fasteners: Corrosion-resistant, low-velocity, power-actuated or pneumatically driven carbon-steel fasteners; or self-drilling, self-threading screws.

C. Side-Lap Fasteners: Corrosion-resistant, hexagonal washer head; self-drilling, carbon-steel screws, No. 10 minimum diameter.

D. Flexible Closure Strips: Vulcanized, closed-cell, synthetic rubber.

E. Miscellaneous Sheet Metal Deck Accessories: Steel sheet, minimum yield strength of 33,000 psi, not less than 0.0359-inch design uncoated thickness, of same material and finish as deck; of profile indicated or required for application.

F. Pour Stops and Girder Fillers: Steel sheet, minimum yield strength of 33,000 psi, of same material and finish as deck, and of thickness and profile recommended by SDI Publication No. 31 for overhang and slab depth unless otherwise indicated.

G. Column Closures, End Closures, Z-Closures, and Cover Plates: Steel sheet, of same material, finish, and thickness as deck unless otherwise indicated.

H. Weld Washers: Uncoated steel sheet, shaped to fit deck rib, 0.0598 inch thick, with factory-punched hole of 3/8-inch minimum diameter.

I. Flat Sump Plates: Single-piece steel sheet, 0.0747 inch thick, of same material and finish as deck. For drains, cut holes in the field.

J. Recessed Sump Pans: Single-piece steel sheet, 0.0747 inch thick, of same material and finish as deck, with 3-inch- wide flanges and sloped recessed pans of 1-1/2-inch minimum depth. For drains, cut holes in the field.

K. Galvanizing Repair Paint: ASTM A 780.

L. Repair Paint: Manufacturer's standard rust-inhibitive primer of same color as primer.

PART 3 - EXECUTION

3.1 EXAMINATION

A. Examine supporting frame and field conditions for compliance with requirements for installation tolerances and other conditions affecting performance.

B. Proceed with installation only after unsatisfactory conditions have been corrected.

3.2 INSTALLATION, GENERAL

A. Install deck panels and accessories according to applicable specifications and commentary in SDI Publication No. 31, manufacturer's written instructions, and requirements in this Section.

B. Install temporary shoring before placing deck panels if required to meet deflection limitations.

C. Locate deck bundles to prevent overloading of supporting members.

D. Place deck panels on supporting frame and adjust to final position with ends accurately aligned and bearing on supporting frame before being permanently fastened. Do not stretch or contract side-lap interlocks.

E. Place deck panels flat and square and fasten to supporting frame without warp or deflection.

F. Cut and neatly fit deck panels and accessories around openings and other work projecting through or adjacent to deck.

G. Provide additional reinforcement and closure pieces at openings as required for strength, continuity of deck, and support of other work.

H. Comply with AWS requirements and procedures for manual shielded metal arc welding, appearance and quality of welds, and methods used for correcting welding work.

I. Mechanical fasteners may be used in lieu of welding to fasten deck. Locate mechanical fasteners and install according to deck manufacturer's written instructions.
   1. Fasteners shall provide diaphragm shear and uplift resistance equal to or greater than welding indicated herein and on Drawings.

3.3 ROOF-DECK INSTALLATION

A. Fasten roof-deck panels to steel supporting members by arc spot (puddle) welds of the surface diameter indicated or arc seam welds with an equal perimeter that is not less than 1-1/2 inches long, and as follows:
   1. Weld Diameter: As indicated on Structural Plans.
   2. Weld Spacing: As indicated on Structural Plans.
   3. Weld Washers: Install weld washers at each weld location if deck gauge is lighter than 22 gauge.

B. Side-Lap and Perimeter Edge Fastening: Fasten side laps and perimeter edges of panels between supports, at intervals shown on Structural Plans:
   1. Mechanically fasten with self-drilling, No. 10 diameter or larger, carbon-steel screws.
   2. Fasten with a minimum of 1-1/2-inch- long welds.

C. End Bearing: Install deck ends over supporting frame with a minimum end bearing of 1-1/2 inches, with end joints as follows:
   1. End Joints: Lapped 2 inches minimum or butted at Contractor's option.

D. Roof Sump Pans and Sump Plates: Install over openings provided in roof deck and weld or mechanically fasten flanges to top of deck. Space welds or mechanical fasteners not more than 12 inches apart with at least one weld or fastener at each corner.

1. Install reinforcing channels or zees in ribs to span between supports and weld or mechanically fasten.

E. Miscellaneous Roof-Deck Accessories: Install ridge and valley plates, finish strips, end closures, and reinforcing channels according to deck manufacturer's written instructions. Weld or mechanically fasten to substrate to provide a complete deck installation.
   1. Weld cover plates at changes in direction of roof-deck panels unless otherwise indicated.

3.4 FIELD QUALITY CONTROL

A. Testing Agency: See Section 01 45 23.

B. Field welds will be subject to inspection.

C. Testing agency will report inspection results promptly and in writing to Contractor and Architect.

D. Remove and replace work that does not comply with specified requirements.

E. Additional inspecting, at Contractor's expense, will be performed to determine compliance of corrected work with specified requirements.

3.5 PROTECTION

A. Galvanizing Repairs: Prepare and repair damaged galvanized coatings on both surfaces of deck with galvanized repair paint according to ASTM A 780 and manufacturer's written instructions.

B. Repair Painting: Wire brush and clean rust spots, welds, and abraded areas on both surfaces of prime-painted deck immediately after installation, and apply repair paint.
   1. Apply repair paint, of same color as adjacent shop-primed deck, to bottom surfaces of deck exposed to view.

C. Provide final protection and maintain conditions to ensure that steel deck is without damage or deterioration at time of Substantial Completion.

END OF SECTION 05 31 23

SECTION 05 40 00
COLD-FORMED METAL FRAMING

PART 1 - GENERAL

1.01 SUMMARY

A. Section includes:

1. Exterior non-load-bearing wall framing.

B. Related Sections include:

1. Section 055000 “Metal Fabrications” for miscellaneous steel shapes, masonry shelf angles, and connections used with cold-formed metal framing.
2. Section 092116.23 “Gypsum Board Shaft Wall Assemblies” for interior non-load-bearing, metal-stud-framed, shaft-wall assemblies, with height limitations.
3. Section 092216 “Non-Structural Metal Framing” for standard, interior non-load-bearing, metal-stud framing, with height limitations and ceiling-suspension assemblies.

1.02 PREINSTALLATION MEETINGS

A. Preinstallation Conference: Conduct conference at Project site.

1.03 ACTION SUBMITTALS

A. Product Data: For each type of product.

B. Shop Drawings:

1. Include layout, spacings, sizes, thicknesses, and types of cold-formed steel framing; fabrication; and fastening and anchorage details, including mechanical fasteners.
2. Indicate reinforcing channels, opening framing, supplemental framing, strapping, bracing, bridging, splices, accessories, connection details, and attachment to adjoining work.

C. Delegated-Design Submittal: For cold-formed steel framing.

1.04 INFORMATIONAL SUBMITTALS

A. Welding certificates.

B. Product Certificates.

C. Product Test Reports.

D. Evaluation Reports: For nonstandard cold-formed steel framing post-installed anchors and power-actuated fasteners, from ICC-ES or other qualified testing agency acceptable to authorities having jurisdiction.

1.05 QUALITY ASSURANCE

A. Welding Qualifications: Qualify procedures and personnel according to the following:

1. AWS D1.1/D1.1M, "Structural Welding Code - Steel."
2. AWS D1.3/D1.3M, "Structural Welding Code - Sheet Steel."

B. Mockups: Provide cold-formed metal framing and accessories required to construct integrated exterior mockup specified in Division 01 Section "Mockups."

PART 2 - PRODUCTS

2.01 MANUFACTURERS

A. Manufacturers: Subject to compliance with requirements, available manufacturers offering products that may be incorporated into the Work include, but are not limited to the following:

1. AllSteel & Gypsum Products, Inc.
2. CEMCO; California Expanded Metal Products Co.
3. ClarkDietrich.
4. MarinoWARE.
5. SCAFCO Steel Stud Company.
6. Telling Industries.
7. The Steel Network, Inc.

2.02 PERFORMANCE REQUIREMENTS

A. Delegated Design: Engage a qualified professional engineer, as defined in Section 014000 "Quality Requirements," to design cold-formed steel framing.

B. Structural Performance: Provide cold-formed steel framing capable of withstanding design loads within limits and under conditions indicated.

1. Design Loads: As indicated on Drawings.
2. Deflection Limits: Design framing systems to withstand design loads without deflections greater than the following:

   a. Exterior Non-Load-Bearing Framing: Horizontal deflection of 1/270 of the wall height.

3. Design framing systems to provide for movement of framing members located outside the insulated building envelope without damage or overstressing, sheathing failure, connection

failure, undue strain on fasteners and anchors, or other detrimental effects when subject to a maximum ambient temperature change of 120 deg F.

4. Design framing system to maintain clearances at openings, to allow for construction tolerances, and to accommodate live load deflection of primary building structure as follows:

   a. Upward and downward movement of 3/4 inch.

5. Design exterior non-load-bearing wall framing to accommodate horizontal deflection without regard for contribution of sheathing materials.

C. Cold-Formed Steel Framing Standards: Unless more stringent requirements are indicated, framing shall comply with AISI S100, AISI S200, and the following:

1. Wall Studs: AISI S211.
2. Headers: AISI S212.
3. Lateral Design: AISI S213.

D. Fire-Resistance Ratings: Comply with ASTM E 119; testing by a qualified testing agency. Identify products with appropriate markings of applicable testing agency.

1. Indicate design designations from UL's “Fire Resistance Directory” or from the listings of another qualified testing agency acceptable to authorities having jurisdiction.

2.03 COLD-FORMED STEEL FRAMING MATERIALS

A. Steel Sheet: ASTM A 1003/A 1003M, Structural Grade, Type H, metallic coated, of grade and coating designation as follows:

1. Grade: As required by structural performance.
2. Coating: G60, A60, AZ50, or GF30.

B. Steel Sheet for Vertical Deflection Clips: ASTM A 653/A 653M, structural steel, zinc coated, of grade and coating as follows:

1. Grade: As required by structural performance.
2. Coating: G60.

2.04 EXTERIOR NON-LOAD-BEARING WALL FRAMING

A. Steel Studs: Manufacturer's standard C-shaped steel studs, of web depths indicated, punched, with stiffened flanges, and as follows:

1. Minimum Base-Metal Thickness: 0.0677 inch.
2. Flange Width: 1-5/8 inches.

B. Steel Track: Manufacturer's standard U-shaped steel track, of web depths indicated, unpunched, with unstiffened flanges, and as follows:

C. Vertical Deflection Clips: Manufacturer's standard head clips, capable of accommodating upward and downward vertical displacement of primary structure through positive mechanical attachment to stud web.

D. Single Deflection Track: Manufacturer's single, deep-leg, U-shaped steel track; unpunched, with unstiffened flanges, of web depth to contain studs while allowing free vertical movement, with flanges designed to support horizontal loads and transfer them to the primary structure, and as follows:

E. Double Deflection Tracks: Manufacturer's double, deep-leg, U-shaped steel tracks, consisting of nested inner and outer tracks; unpunched, with unstiffened flanges.

2.05 FRAMING ACCESSORIES

A. Fabricate steel-framing accessories from ASTM A 1003/A 1003M, Structural Grade, Type H, metallic coated steel sheet, of same grade and coating designation used for framing members.

B. Provide accessories of manufacturer's standard thickness and configuration, unless otherwise indicated, as follows:

2.06 ANCHORS, CLIPS, AND FASTENERS

A. Steel Shapes and Clips: ASTM A 36/A 36M, zinc coated by hot-dip process according to ASTM A 123/A 123M.

B. Anchor Bolts: ASTM F 1554, Grade 36, threaded carbon-steel hex-headed bolts, or, headless bolts, with encased end threaded, carbon-steel nuts, and flat, hardened-steel washers; zinc coated by mechanically deposition according to ASTM B 695, Class 50.

C. Post-Installed Anchors: Fastener systems with bolts of same basic metal as fastened metal, if visible, unless otherwise indicated; with working capacity greater than or equal to the design load, according to an evaluation report acceptable to authorities having jurisdiction, based on ICC-ES AC01 as appropriate for the substrate.

1. Uses: Securing cold-formed steel framing to structure.
2. Type: Torque-controlled expansion anchor, Torque-controlled adhesive anchor, or adhesive anchor.
3. Material for Interior Locations: Carbon-steel components zinc plated to comply with ASTM B 633 or ASTM F 1941, Class Fe/Zn 5, unless otherwise indicated.
4. Material for Exterior or Interior Locations and Where Stainless Steel Is Indicated: Alloy Group 1 stainless-steel bolts, ASTM F 593, and nuts, ASTM F 594.

D. Power-Actuated Anchors: Fastener systems with working capacity greater than or equal to the design load, according to an evaluation report acceptable to authorities having jurisdiction, based on ICC-ES AC70.

E. Mechanical Fasteners: ASTM C 1513, corrosion-resistant-coated, self-drilling, self-tapping, steel drill screws.

1. Head Type: Low-profile head beneath sheathing; manufacturer's standard elsewhere.

2.07 MISCELLANEOUS MATERIALS

A. Galvanizing Repair Paint: ASTM A 780/A 780M.

B. Cement Grout: Portland cement, ASTM C 150/C 150M, Type I; and clean, natural sand, ASTM C 404. Mix at ratio of 1 part cement to 2-1/2 parts sand, by volume, with minimum water required for placement and hydration.

C. Nonmetallic, Nonshrink Grout: Factory-packaged, nonmetallic, noncorrosive, nonstaining grout, complying with ASTM C 1107/C 1107M, and with a fluid consistency and 30-minute working time.

D. Shims: Load-bearing, high-density, multimonomer, nonleaching plastic; or cold-formed steel of same grade and metallic coating as framing members supported by shims.

PART 3 - EXECUTION

3.01 EXAMINATION

A. Examine substrates, areas, conditions, and abutting structural framing for compliance with requirements for installation tolerances and other conditions affecting performance of the Work.

B. Proceed with installation only after unsatisfactory conditions have been corrected.

3.02 PREPARATION

A. Before sprayed fire-resistive materials are applied, attach continuous angles, supplementary framing, or tracks to structural members indicated to receive sprayed fire-resistive materials.

B. After applying sprayed fire-resistive materials, remove only as much of these materials as needed to complete installation of cold-formed framing without reducing thickness of fire-resistive materials below that required to obtain fire-resistance ratings indicated. Protect remaining fire-resistive materials from damage.

3.03 INSTALLATION, GENERAL

A. Cold-formed steel framing may be shop or field fabricated for installation, or it may be field assembled.

B. Install cold-formed steel framing according to AISI S200, AISI S202, and manufacturer's written instructions unless more stringent requirements are indicated.

C. Install cold-formed steel framing and accessories plumb, square, and true to line, and with connections securely fastened.

D. Install framing members in one-piece lengths unless splice connections are indicated for track or tension members.

E. Install temporary bracing and supports to secure framing and support loads equal to those for which structure was designed. Maintain braces and supports in place, undisturbed, until entire integrated supporting structure has been completed and permanent connections to framing are secured.

F. Do not bridge building expansion joints with cold-formed steel framing. Independently frame both sides of joints.

G. Install insulation, specified in Section 072100 "Thermal Insulation," in framing-assembly members, such as headers, sills, boxed joists, and multiple studs at openings, that are inaccessible on completion of framing work.

H. Fasten hole-reinforcing plate over web penetrations that exceed size of manufacturer's approved or standard punched openings.

3.04 EXTERIOR NON-LOAD-BEARING WALL INSTALLATION

A. Install continuous tracks sized to match studs. Align tracks accurately and securely anchor to supporting structure.

B. Fasten both flanges of studs to bottom track unless otherwise indicated. Space studs as follows:

1. Stud Spacing: As indicated on Drawings.

C. Set studs plumb, except as needed for diagonal bracing or required for nonplumb walls or warped surfaces and similar requirements.

D. Isolate non-load-bearing steel framing from building structure to prevent transfer of vertical loads while providing lateral support.

1. Install single deep-leg deflection tracks and anchor to building structure.
2. Connect vertical deflection clips to bypassing studs and anchor to building structure.
3. Connect drift clips to cold-formed steel framing and anchor to building structure.

E. Install horizontal bridging in wall studs, spaced vertically in rows indicated on Shop Drawings but not more than 48 inches apart. Fasten at each stud intersection.

1. Channel Bridging: Cold-rolled steel channel, welded or mechanically fastened to webs of punched studs.
2. Strap Bridging: Combination of flat, taut, steel sheet straps of width and thickness indicated and stud-track solid blocking of width and thickness to match studs. Fasten flat straps to stud flanges and secure solid blocking to stud webs or flanges.
3. Bar Bridging: Proprietary bridging bars installed according to manufacturer's written instructions.

F. Top Bridging for Single Deflection Track: Install row of horizontal bridging within 18 inches of single deflection track. Install a combination of bridging and stud or stud-track solid blocking of width and thickness matching studs, secured to stud webs or flanges.

1. Install solid blocking at centers indicated on Shop Drawings.

G. Install miscellaneous framing and connections, including stud kickers, web stiffeners, clip angles, continuous angles, anchors, and fasteners, to provide a complete and stable wall-framing system.

3.05 ERECTION TOLERANCES

A. Install cold-formed steel framing level, plumb, and true to line to a maximum allowable tolerance variation of 1/8 inch in 10 feet and as follows:

1. Space individual framing members no more than plus or minus 1/8 inch from plan location. Cumulative error shall not exceed minimum fastening requirements of sheathing or other finishing materials.

3.06 FIELD QUALITY CONTROL

A. Testing: Owner will engage a qualified independent testing and inspecting agency to perform field tests and inspections and prepare test reports.

B. Field and shop welds will be subject to testing and inspecting.

C. Testing agency will report test results promptly and in writing to Contractor and Architect.

D. Cold-formed steel framing will be considered defective if it does not pass tests and inspections.

E. Additional testing and inspecting, at Contractor's expense, will be performed to determine compliance of replaced or additional work with specified requirements.

3.07 REPAIRS AND PROTECTION

A. Galvanizing Repairs: Prepare and repair damaged galvanized coatings on fabricated and installed cold-formed steel framing with galvanized repair paint according to ASTM A 780/A 780M and manufacturer's written instructions.

B. Provide final protection and maintain conditions, in a manner acceptable to manufacturer and Installer, that ensure that cold-formed steel framing is without damage or deterioration at time of Substantial Completion.

END OF SECTION

SECTION 05 50 00
METAL FABRICATIONS

PART 1 - GENERAL

1.01 SUMMARY

A. Section includes:

1. Steel framing and supports for mechanical and electrical equipment.
2. Steel framing and supports for applications where framing and supports are not specified in other Sections.
3. Elevator machine beams and hoist beams
4. Steel shapes for supporting elevator door sills.
5. Slotted channel framing.
6. Shelf angles.
7. Metal ladders.
8. Elevator pit sump covers.
9. Miscellaneous steel trim including loading-dock edge angles.
10. Metal bollards.
11. Square Tube wall panels.
12. Hot-dipped galvanized framing for exterior fencing and gates.

B. Related Sections include:

1. Section 051200 “Structural Steel Framing” for steel framing, supports, elevator machine beams, hoist beams, divider beams, door frames, and other steel items attached to the structural-steel framing.
2. Section 329300 “Plants” for tree grates.

1.02 COORDINATION

A. Coordinate selection of shop primers with topcoats to be applied over them. Comply with paint and coating manufacturers' written instructions to ensure that shop primers and topcoats are compatible with one another.

B. Coordinate installation of metal fabrications that are anchored to or that receive other work. Furnish setting drawings, templates, and directions for installing anchorages, including sleeves, concrete inserts, anchor bolts, and items with integral anchors, that are to be embedded in concrete or masonry. Deliver such items to Project site in time for installation.

1.03 ACTION SUBMITTALS

A. Product Data: For the following:

1. Fasteners.

2. Shop primers.
3. Shrinkage-resisting grout.
4. Manufactured metal ladders.
5. Metal bollards.
6. Square tube wall panels.

B. Shop Drawings: Show fabrication and installation details. Include plans, elevations, sections, and details of metal fabrications and their connections. Show anchorage and accessory items. Provide

C. Delegated-Design Submittal: For ladders, including analysis data signed and sealed by the qualified professional engineer responsible for their preparation.

1.04 INFORMATIONAL SUBMITTALS

A. Qualification Data: For professional engineer's experience with providing delegated-design engineering services of the kind indicated, including documentation that engineer is licensed in the jurisdiction in which Project is located.

B. Mill Certificates: Signed by stainless steel manufacturers, certifying that products furnished comply with requirements.

C. Welding certificates.

D. Paint Compatibility Certificates: From manufacturers of topcoats applied over shop primers, certifying that shop primers are compatible with topcoats.

1.05 QUALITY ASSURANCE

A. Welding Qualifications: Qualify procedures and personnel in accordance with the following:

1. AWS D1.1/D1.1M, “Structural Welding Code - Steel.”
2. AWS D1.2/D1.2M, “Structural Welding Code - Aluminum.”
3. AWS D1.6/D1.6M, “Structural Welding Code - Stainless Steel.”

1.06 FIELD CONDITIONS

A. Field Measurements: Verify actual locations of walls, floor slabs, decks, and other construction contiguous with metal fabrications by field measurements before fabrication.

PART 2 - PRODUCTS

2.01 PERFORMANCE REQUIREMENTS

A. Delegated Design: Engage a qualified professional engineer, as defined in Section 014000 “Quality Requirements,” to design ladders.

B. Structural Performance of Ladders: Ladders, including landings, shall withstand the effects of loads and stresses within limits and under conditions specified in ANSI A14.3.

C. Thermal Movements: Allow for thermal movements from ambient and surface temperature changes acting on exterior metal fabrications by preventing buckling, opening of joints, overstressing of components, failure of connections, and other detrimental effects.

1. Temperature Change: 120 deg F, ambient; 180 deg F, material surfaces.

2.02 METALS

A. Metal Surfaces, General: Provide materials with smooth, flat surfaces unless otherwise indicated. For metal fabrications exposed to view in the completed Work, provide materials without seam marks, roller marks, rolled trade names, or blemishes.

B. Steel Plates, Shapes, and Bars: ASTM A36/A36M.

C. Stainless Steel Sheet, Strip, and Plate: ASTM A240/A240M or ASTM A666, Type 304.

D. Stainless Steel Bars and Shapes: ASTM A276/A276M, Type 304.

E. Rolled-Steel Floor Plate: ASTM A786/A786M, rolled from plate complying with ASTM A36/A36M or ASTM A283/A283M, Grade C or D.

F. Rolled-Stainless Steel Floor Plate: ASTM A793.

G. Steel Tubing: ASTM A500/A500M, cold-formed steel tubing.

H. Steel Pipe: ASTM A53/A53M, Standard Weight (Schedule 40) unless otherwise indicated.

2.03 FASTENERS

A. General: Unless otherwise indicated, provide Type 304 stainless steel fasteners for exterior use and zinc-plated fasteners with coating complying with ASTM B633 or ASTM F1941/F1941M, Class Fe/Zn 5, at exterior walls. Select fasteners for type, grade, and class required.

B. Steel Bolts and Nuts: Regular hexagon-head bolts, ASTM A307, Grade A; with hex nuts, ASTM A563; and, where indicated, flat washers.

C. High-Strength Bolts, Nuts, and Washers: ASTM F3125/F3125M, Grade A325, Type 3, heavy-hex steel structural bolts; ASTM A563, Grade DH3, heavy-hex carbon-steel nuts; and where indicated, flat washers.

D. Stainless Steel Bolts and Nuts: Regular hexagon-head annealed stainless steel bolts, ASTM F593; with hex nuts, ASTM F594; and, where indicated, flat washers; Alloy [**Group 1**] [**Group 2**].

E. Anchor Bolts: ASTM F1554, Grade 36, of dimensions indicated; with nuts, ASTM A563; and, where indicated, flat washers.

1. Hot-dip galvanize or provide mechanically deposited, zinc coating where item being fastened is indicated to be galvanized.

F. Anchors, General: Capable of sustaining, without failure, a load equal to six times the load imposed when installed in unit masonry and four times the load imposed when installed in concrete, as determined by testing in accordance with ASTM E488/E488M, conducted by a qualified independent testing agency.

G. Cast-in-Place Anchors in Concrete: Either threaded or wedge type unless otherwise indicated; galvanized ferrous castings, either ASTM A47/A47M malleable iron or ASTM A27/A27M cast steel. Provide bolts, washers, and shims as needed, all hot-dip galvanized per ASTM F2329/F2329M.

H. Post-Installed Anchors: Torque-controlled expansion anchors or chemical anchors.

1. Material for Interior Locations: Carbon-steel components zinc plated to comply with ASTM B633 or ASTM F1941/F1941M, Class Fe/Zn 5, unless otherwise indicated.
2. Material for Exterior Locations and Where Stainless Steel Is Indicated: Alloy Group 1 stainless steel bolts, ASTM F593, and nuts, ASTM F594.

2.04 MISCELLANEOUS MATERIALS

A. Shop Primers: Provide primers that comply with Division 09 painting sections.

B. Universal Shop Primer: Fast-curing, lead- and chromate-free, universal modified-alkyd primer complying with MPI#79 and compatible with topcoat.

1. Use primer containing pigments that make it easily distinguishable from zinc-rich primer.

C. Water-Based Primer: Emulsion type, anticorrosive primer for mildly corrosive environments that is resistant to flash rusting when applied to cleaned steel, complying with MPI#107 and compatible with topcoat.

D. Epoxy Zinc-Rich Primer: Complying with MPI#20 and compatible with topcoat.

E. Shop Primer for Galvanized Steel: Primer formulated for exterior use over zinc-coated metal and compatible with finish paint systems indicated.

F. Galvanizing Repair Paint: High-zinc-dust-content paint complying with SSPC-Paint 20 and compatible with paints specified to be used over it.

G. Bituminous Paint: Cold-applied asphalt emulsion complying with ASTM D1187/D1187M.

H. Shrinkage-Resistant Grout: Factory-packaged, nonmetallic, nonstaining, noncorrosive, nongaseous grout complying with ASTM C1107/C1107M. Provide grout specifically recommended by manufacturer for interior and exterior applications.

I. Concrete: Comply with requirements in Section 033000 “Cast-in-Place Concrete” for normal-weight, air-entrained concrete with a minimum 28-day compressive strength of 3000 psi.

2.05 FABRICATION, GENERAL

A. Shop Assembly: Preassemble items in the shop to greatest extent possible. Disassemble units only as necessary for shipping and handling limitations. Use connections that maintain structural value of joined pieces. Clearly mark units for reassembly and coordinated installation.

B. Cut, drill, and punch metals cleanly and accurately. Remove burrs and ease edges to a radius of approximately 1/32 inch unless otherwise indicated. Remove sharp or rough areas on exposed surfaces.

C. Form bent-metal corners to smallest radius possible without causing grain separation or otherwise impairing work.

D. Form exposed work with accurate angles and surfaces and straight edges.

E. Weld corners and seams continuously to comply with the following:

1. Use materials and methods that minimize distortion and develop strength and corrosion resistance of base metals.
2. Obtain fusion without undercut or overlap.
3. Remove welding flux immediately.
4. At exposed connections, finish exposed welds and surfaces smooth and blended so no roughness shows after finishing and contour of welded surface matches that of adjacent surface.

F. Form exposed connections with hairline joints, flush and smooth, using concealed fasteners or welds where possible. Where exposed fasteners are required, use Phillips flat-head (countersunk) fasteners unless otherwise indicated. Locate joints where least conspicuous.

G. Fabricate seams and other connections that are exposed to weather in a manner to exclude water. Provide weep holes where water may accumulate.

H. Cut, reinforce, drill, and tap metal fabrications as indicated to receive finish hardware, screws, and similar items.

I. Provide for anchorage of type indicated; coordinate with supporting structure. Space anchoring devices to secure metal fabrications rigidly in place and to support indicated loads.

J. Where units are indicated to be cast into concrete or built into masonry, equip with integrally welded steel strap anchors, 1/8 by 1-1/2 inches, with a minimum 6-inch embedment and 2-inch hook, not less than 8 inches from ends and corners of units and 24 inches o.c., unless otherwise indicated.

2.06 MISCELLANEOUS FRAMING AND SUPPORTS

A. General: Provide steel framing and supports not specified in other Sections as needed to complete the Work.

B. Fabricate units from steel shapes, plates, and bars of welded construction unless otherwise indicated. Fabricate to sizes, shapes, and profiles indicated and as necessary to receive adjacent construction.

1. Fabricate units from slotted channel framing where indicated.
2. Furnish inserts for units installed after concrete is placed.

C. Fabricate supports for operable partitions from continuous steel beams of sizes recommended by partition manufacturer with attached bearing plates, anchors, and braces as recommended by partition manufacturer. Drill or punch bottom flanges of beams to receive partition track hanger rods; locate holes where indicated on operable partition Shop Drawings.

D. Galvanize miscellaneous framing and supports where indicated.

E. Prime miscellaneous framing and supports with zinc-rich primer where indicated.

2.07 SHELF ANGLES

A. Fabricate shelf angles from steel angles of sizes indicated and for attachment to concrete framing. Provide horizontally slotted holes to receive 3/4-inch bolts, spaced not more than 6 inches from ends and 24 inches o.c., unless otherwise indicated.

1. Provide mitered and welded units at corners.
2. Provide open joints in shelf angles at expansion and control joints. Make open joint approximately 2 inches larger than expansion or control joint.

B. For cavity walls, provide vertical channel brackets to support angles from backup masonry and concrete.

C. Galvanize and prime shelf angles located in exterior walls.

D. Prime shelf angles located in exterior walls with zinc-rich primer.

E. Furnish wedge-type concrete inserts, complete with fasteners, to attach shelf angles to cast-in-place concrete.

2.08 METAL LADDERS

A. General:

1. Comply with ANSI A14.3, except for elevator pit ladders.
2. For elevator pit ladders, comply with ASME A17.1/CSA B44.

B. Steel Ladders: Aluminum.

1. Basis of Design: Design is based on products by O’Keefe.
2. Space siderails 16 inches apart unless otherwise indicated.
3. Siderails: Continuous, 3/8-by-2-1/2-inch steel flat bars, with eased edges.
4. Rungs: 3/4-inch-diameter, steel bars.

5. Fit rungs in centerline of siderails; plug-weld and grind smooth on outer rail faces.
6. Support each ladder at top and bottom and not more than 60 inches o.c. with welded or bolted steel brackets.

2.09 ELEVATOR PIT SUMP COVERS

A. Fabricate from 1/8-inch rolled-steel floor plate with four 1-inch-diameter holes for water drainage and for lifting.

B. Provide steel angle supports unless otherwise indicated.

2.10 MISCELLANEOUS STEEL TRIM

A. Unless otherwise indicated, fabricate units from steel shapes, plates, and bars of profiles shown with continuously welded joints and smooth exposed edges. Miter corners and use concealed field splices where possible.

B. Provide cutouts, fittings, and anchorages as needed to coordinate assembly and installation with other work.

1. Provide with integrally welded steel strap anchors for embedding in concrete or masonry construction.

C. Galvanize and prime exterior miscellaneous steel trim.

D. Prime exterior miscellaneous steel trim with zinc-rich primer.

2.11 METAL BOLLARDS

A. Fabricate metal bollards from Schedule 80 steel pipe.

1. Cap bollards with 1/4-inch-thick, steel plate with domed top.
2. Where bollards are indicated to receive controls for door operators, provide cutouts for controls and holes for wire.
3. Where bollards are indicated to receive light fixtures, provide cutouts for fixtures and holes for wire.

B. Fabricate sleeves for bollard anchorage from steel or stainless steel pipe with 1/4-inch-thick, steel or stainless steel plate welded to bottom of sleeve. Make sleeves not less than 8 inches deep and 3/4 inch larger than OD of bollard.

C. Prime steel bollards with zinc-rich primer.

2.12 SQUARE TUBE WALL PANELS

A. Tubes:

1. Basis of Design: Design is based on Grainger, “Item 186634 Model: 9025-72.”

2. Material: Aluminum, 6105-T5.
3. Size: 1 inch x 1 inch.
4. Profile: Double flange, open slot.
5. Finish: Bronze anodized
6. Accessories: Provide manufacturer's standard 2 way, 3 way, and corner connectors.

2.13 STEEL WELD PLATES AND ANGLES

A. Provide steel weld plates and angles not specified in other Sections, for items supported from concrete construction as needed to complete the Work. Provide each unit with no fewer than two integrally welded steel strap anchors for embedding in concrete.

2.14 GENERAL FINISH REQUIREMENTS

A. Finish metal fabrications after assembly.

B. Finish exposed surfaces to remove tool and die marks and stretch lines, and to blend into surrounding surface.

2.15 STEEL AND IRON FINISHES

A. Galvanizing: Hot-dip galvanize items as indicated to comply with ASTM A153/A153M for steel and iron hardware and with ASTM A123/A123M for other steel and iron products.

1. Do not quench or apply post galvanizing treatments that might interfere with paint adhesion.

B. Shop prime iron and steel items not indicated to be galvanized unless they are to be embedded in concrete, sprayed-on fireproofing, or masonry, or unless otherwise indicated.

1. Shop prime with universal shop primer unless otherwise indicated.

C. Preparation for Shop Priming: Prepare surfaces to comply with SSPC-SP 6/NACE No. 3, "Commercial Blast Cleaning."

D. Shop Priming: Apply shop primer to comply with SSPC-PA 1, "Paint Application Specification No. 1: Shop, Field, and Maintenance Painting of Steel," for shop painting.

1. Stripe paint corners, crevices, bolts, welds, and sharp edges.

PART 3 - EXECUTION

3.01 INSTALLATION, GENERAL

A. Cutting, Fitting, and Placement: Perform cutting, drilling, and fitting required for installing metal fabrications. Set metal fabrications accurately in location, alignment, and elevation; with edges and surfaces level, plumb, true, and free of rack; and measured from established lines and levels.

B. Fit exposed connections accurately together to form hairline joints. Weld connections that are not to be left as exposed joints but cannot be shop welded because of shipping size limitations. Do not weld, cut, or abrade surfaces of exterior units that have been hot-dip galvanized after fabrication and are for bolted or screwed field connections.

C. Field Welding: Comply with the following requirements:

1. Use materials and methods that minimize distortion and develop strength and corrosion resistance of base metals.
2. Obtain fusion without undercut or overlap.
3. Remove welding flux immediately.
4. At exposed connections, finish exposed welds and surfaces smooth and blended so no roughness shows after finishing and contour of welded surface matches that of adjacent surface.

D. Fastening to In-Place Construction: Provide anchorage devices and fasteners where metal fabrications are required to be fastened to in-place construction. Provide threaded fasteners for use with concrete and masonry inserts, toggle bolts, through bolts, lag screws, wood screws, and other connectors.

E. Provide temporary bracing or anchors in formwork for items that are to be built into concrete, masonry, or similar construction.

3.02 INSTALLATION OF MISCELLANEOUS FRAMING AND SUPPORTS

A. General: Install framing and supports to comply with requirements of items being supported, including manufacturers' written instructions and requirements indicated on Shop Drawings.

3.03 INSTALLATION OF METAL BOLLARDS

A. Fill metal-capped bollards solidly with concrete and allow concrete to cure seven days before installing.

1. Do not fill removable bollards with concrete.

B. Anchor bollards to existing construction with anchor bolts. Provide four 3/4-inch bolts at each bollard unless otherwise indicated.

1. Embed anchor bolts at least 4 inches in concrete.

C. Place removable bollards over internal sleeves and secure with 3/4-inch machine bolts and nuts. After tightening nuts, drill holes in bolts for inserting padlocks. Owner furnishes padlocks.

D. Fill bollards solidly with concrete, mounding top surface to shed water.

1. Do not fill removable bollards with concrete.

3.04 REPAIRS

A. Touchup Painting:

1. Immediately after erection, clean field welds, bolted connections, and abraded areas. Paint uncoated and abraded areas with same material as used for shop painting to comply with SSPC-PA 1 for touching up shop-painted surfaces.

a. Apply by brush or spray to provide a minimum 2.0-mil dry film thickness.

2. Cleaning and touchup painting of field welds, bolted connections, and abraded areas of shop paint are specified in Division 09 painting sections.

B. Galvanized Surfaces: Clean field welds, bolted connections, and abraded areas and repair galvanizing to comply with ASTM A780/A780M.

END OF SECTION

SECTION 05 51 13
METAL PAN STAIRS

PART 1 - GENERAL

1.01 SUMMARY

A. Section includes:

1. Interior preassembled steel stairs with pre-cast terrazzo landings and formed treads.
2. Exterior preassembled steel stairs with concrete filled treads.

1.02 COORDINATION

A. Coordinate selection of shop primers with topcoats to be applied over them. Comply with paint and coating manufacturers' written instructions to ensure that shop primers and topcoats are compatible with one another.

B. Coordinate installation of anchorages for metal stairs.

1. Furnish setting drawings, templates, and directions for installing anchorages, including sleeves, concrete inserts, anchor bolts, blocking for attachment of wall-mounted handrails, and items with integral anchors, that are to be embedded in concrete or masonry.
2. Deliver such items to Project site in time for installation.

C. Coordinate locations of hanger rods and struts with other work so they do not encroach on required stair width and are within fire-resistance-rated stair enclosure.

1.03 ACTION SUBMITTALS

A. Product Data: For metal pan stairs and the following:

1. Perforated metal.
2. Woven-wire mesh.
3. Welded-wire mesh.
4. Precast terrazzo treads.
5. Shop primer products.
6. Abrasive-coating finish to formed-metal stairs.
7. Grout.

B. Shop Drawings:

1. Include plans, elevations, sections, details, and attachments to other work.
2. Indicate sizes of metal sections, thickness of metals, profiles, holes, and field joints.
3. Include plan at each level.

C. Samples for Verification: For each type and finish of nosing.

D. Delegated-Design Submittal: For stairs, including analysis data signed and sealed by the qualified professional engineer responsible for their preparation.

1.04 INFORMATIONAL SUBMITTALS

A. Qualification Data: For professional engineer's experience with providing delegated-design engineering services of the kind indicated, including documentation that engineer is licensed in the jurisdiction in which Project is located.

B. Welding certificates.

C. Paint Compatibility Certificates: From manufacturers of topcoats applied over shop primers, certifying that shop primers are compatible with topcoats.

1.05 QUALITY ASSURANCE

A. Installer Qualifications: Fabricator of products.

B. Welding Qualifications: Qualify procedures and personnel according to the following:

1. AWS D1.1/D1.1M, “Structural Welding Code - Steel.”
2. AWS D1.3/D1.3M, “Structural Welding Code - Sheet Steel.”

1.06 DELIVERY, STORAGE, AND HANDLING

A. Store materials to permit easy access for inspection and identification.

1. Keep steel members off ground and spaced by using pallets, dunnage, or other supports and spacers.
2. Protect steel members and packaged materials from corrosion and deterioration.
3. Do not store materials on structure in a manner that might cause distortion, damage, or overload to members or supporting structures.

a. Repair or replace damaged materials or structures as directed.

PART 2 - PRODUCTS

2.01 PERFORMANCE REQUIREMENTS

A. Delegated Design: Engage a qualified professional engineer, as defined in Section 014000 “Quality Requirements,” to design stairs, including attachment to building construction.

B. Structural Performance of Stairs: Metal stairs shall withstand the effects of gravity loads and the following loads and stresses within limits and under conditions indicated:

1. Uniform Load: 100 lbf/sq. ft..
2. Concentrated Load: 300 lbf applied on an area of 4 sq. in..
3. Uniform and concentrated loads need not be assumed to act concurrently.
4. Stair Framing: Capable of withstanding stresses resulting from railing loads in addition to loads specified above.
5. Limit deflection of treads, platforms, and framing members to L/360 or 1/4 inch, whichever is less.

2.02 METALS

A. Metal Surfaces: Provide materials with smooth, flat surfaces unless otherwise indicated. For components exposed to view in the completed Work, provide materials without seam marks, roller marks, rolled trade names, or blemishes.

B. Steel Plates, Shapes, and Bars: ASTM A 36/A 36M.

C. Uncoated, Cold-Rolled Steel Sheet: ASTM A 1008/A 1008M, structural steel, Grade 25, unless another grade is required by design loads; exposed.

D. Uncoated, Hot-Rolled Steel Sheet: ASTM A 1011/A 1011M, structural steel, Grade 30, unless another grade is required by design loads.

2.03 FASTENERS

A. General: Provide zinc-plated fasteners with coating complying with ASTM B 633 or ASTM F 1941/F 1941M, Class Fe/Zn 12 for exterior use, and Class Fe/Zn 5 where built into exterior walls.

1. Select fasteners for type, grade, and class required.

B. Bolts and Nuts: Regular hexagon-head bolts, ASTM A 307, Grade A; with hex nuts, ASTM A 563; and, where indicated, flat washers.

C. Anchor Bolts: ASTM F 1554, Grade 36, of dimensions indicated; with nuts, ASTM A 563; and, where indicated, flat washers.

D. Post-Installed Anchors: Torque-controlled expansion anchors or chemical anchors capable of sustaining, without failure, a load equal to six times the load imposed when installed in unit masonry and four times the load imposed when installed in concrete, as determined by testing according to ASTM E 488/E 488M, conducted by a qualified independent testing agency.

1. Material for Interior Locations: Carbon-steel components zinc plated to comply with ASTM B 633 or ASTM F 1941/F 1941M, Class Fe/Zn 5, unless otherwise indicated.
2. Material for Exterior Locations and Where Stainless Steel Is Indicated: Alloy Group 1 stainless-steel bolts, ASTM F 593, and nuts, ASTM F 594.

2.04 PRECAST TERRAZZO

A. Precast Terrazzo Units: Include landings and treads.

1. Manufacturers: Subject to compliance with requirements, available manufacturers offering products that may be incorporated into the Work include, but are not limited to, the following:

    a. Precast Terrazzo Enterprises, Inc.
    b. Romoco Precast Terrazzo Products.
    c. Wausau Tile, Inc.; Terra Paving Products Division.

2. Precast Terrazzo Units for Stair Treads and Risers: Comply with NTMA's written recommendations for fabricating precast terrazzo units in sizes and profiles indicated. Reinforce units as required by unit sizes, profiles, and thicknesses and as recommended by manufacturer.

    a. Stair Treads: Three-line abrasive inserts at nosings.
    b. Color, Pattern, and Finish: Match Architect's sample.

3. Precast Terrazzo Finishing:

    a. Finish exposed-to-view edges or reveals to match face finish.
    b. Ease exposed edges to 1/8-inch radius unless otherwise indicated.

4. Water-Cleanable, Tile-Setting Epoxy for Precast Terrazzo: ANSI A118.3.

2.05 MISCELLANEOUS MATERIALS

A. Welding Electrodes: Comply with AWS requirements.

B. Universal Shop Primer: Fast-curing, lead- and chromate-free, universal modified-alkyd primer complying with MPI#79 and compatible with topcoat.

C. Concrete Materials and Properties For Exterior Stairs: Comply with requirements in Division 03 Section “Cast-in-Place Concrete” for normal-weight, air-entrained, ready-mix concrete with minimum 28-day compressive strength of 3000 psi and maximum aggregate size of 1/2 inch unless otherwise indicated.

2.06 FABRICATION, GENERAL

A. Provide complete stair assemblies, including metal framing, hangers, struts, clips, brackets, bearing plates, and other components necessary to support and anchor stairs and platforms on supporting structure.

    1. Join components by welding unless otherwise indicated.
    2. Use connections that maintain structural value of joined pieces.

B. Assemble stairs in shop to greatest extent possible.

    1. Disassemble units only as necessary for shipping and handling limitations.
    2. Clearly mark units for reassembly and coordinated installation.

C. Cut, drill, and punch metals cleanly and accurately.

1. Remove burrs and ease edges to a radius of approximately 1/32 inch unless otherwise indicated.
2. Remove sharp or rough areas on exposed surfaces.

D. Form bent-metal corners to smallest radius possible without causing grain separation or otherwise impairing work.

E. Form exposed work with accurate angles and surfaces and straight edges.

F. Weld connections to comply with the following:

1. Use materials and methods that minimize distortion and develop strength and corrosion resistance of base metals.
2. Obtain fusion without undercut or overlap.
3. Remove welding flux immediately.
4. Weld exposed corners and seams continuously unless otherwise indicated.
5. At exposed connections, finish exposed welds to comply with NOMMA's "Voluntary Joint Finish Standards" for Finish #1 - No evidence of welded joint.

G. Form exposed connections with hairline joints, flush and smooth, using concealed fasteners where possible.

1. Where exposed fasteners are required, use Phillips flat-head (countersunk) screws or bolts unless otherwise indicated.
2. Locate joints where least conspicuous.
3. Fabricate joints that will be exposed to weather in a manner to exclude water.
4. Provide weep holes where water may accumulate internally.

2.07 FINISHES

A. Finish metal stairs after assembly.

B. Preparation for Shop Priming: Prepare uncoated, ferrous-metal surfaces to comply with SSPC-SP 3, "Power Tool Cleaning."

C. Apply shop primer to uncoated surfaces of metal stair components, except those with galvanized finishes and those to be embedded in concrete or masonry unless otherwise indicated. Comply with SSPC-PA 1, "Paint Application Specification No. 1: Shop, Field, and Maintenance Painting of Steel," for shop painting.

PART 3 - EXECUTION

3.01 EXAMINATION

A. Verify elevations of floors, bearing surfaces and locations of bearing plates, and other embedments for compliance with requirements.

B. Proceed with installation only after unsatisfactory conditions have been corrected.

3.02 INSTALLING METAL PAN STAIRS

A. Fastening to In-Place Construction: Provide anchorage devices and fasteners where necessary for securing metal stairs to in-place construction.

1. Include threaded fasteners for concrete and masonry inserts, through-bolts, lag bolts, and other connectors.

B. Cutting, Fitting, and Placement: Perform cutting, drilling, and fitting required for installing metal stairs. Set units accurately in location, alignment, and elevation, measured from established lines and levels and free of rack.

C. Install metal stairs by welding stair framing to steel structure or to weld plates cast into concrete unless otherwise indicated.

D. Provide temporary bracing or anchors in formwork for items that are to be built into concrete, masonry, or similar construction.

E. Fit exposed connections accurately together to form hairline joints.

1. Weld connections that are not to be left as exposed joints but cannot be shop welded because of shipping size limitations.
2. Do not weld, cut, or abrade surfaces of exterior units that have been hot-dip galvanized after fabrication and are for bolted or screwed field connections.
3. Comply with requirements for welding in "Fabrication, General" Article.

F. Install precast terrazzo landings and treads with adhesive supplied by precast terrazzo manufacturer on interior stairs.

G. Place and finish concrete fill for treads and platforms to comply with Division 03 Section "Cast-in-Place Concrete" for exterior stairs.

3.03 REPAIR

A. Touchup Painting: Immediately after erection, clean field welds, bolted connections, and abraded areas of shop paint, and paint exposed areas with same material as used for shop painting to comply with SSPC-PA 1 for touching up shop-painted surfaces.

1. Apply by brush or spray to provide a minimum 2.0-mil dry film thickness.

END OF SECTION

SECTION 05 52 13
PIPE AND TUBE RAILINGS

PART 1 - GENERAL

1.01 SUMMARY

A. Section includes:

1. Steel pipe and tube railings.

B. Related Sections include:

1. Section 055112 “Metal Pan Stairs” for steel tube railings associated with metal pan stairs.

1.02 COORDINATION

A. Coordinate selection of shop primers with topcoats to be applied over them. Comply with paint and coating manufacturers' written recommendations to ensure that shop primers and topcoats are compatible with one another.

B. Coordinate installation of anchorages for railings. Furnish setting drawings, templates, and directions for installing anchorages, including sleeves, concrete inserts, anchor bolts, and items with integral anchors, that are to be embedded in concrete or masonry. Deliver such items to Project site in time for installation.

C. Schedule installation so wall attachments are made only to completed walls. Do not support railings temporarily by any means that do not satisfy structural performance requirements.

1.03 ACTION SUBMITTALS

A. Product Data: For the following:

1. Railing brackets.
2. Grout, anchoring cement, and paint products.

B. Shop Drawings: Include plans, elevations, sections, details, and attachments to other work.

C. Samples: For each type of exposed finish required.

D. Delegated-Design Submittal: For railings, including analysis data signed and sealed by the qualified professional engineer responsible for their preparation.

1.04 INFORMATIONAL SUBMITTALS

A. Welding certificates.

B. Mill Certificates: Signed by manufacturers of stainless-steel products certifying that products furnished comply with requirements.

C. Paint Compatibility Certificates: From manufacturers of topcoats applied over shop primers certifying that shop primers are compatible with topcoats.

1.05 QUALITY ASSURANCE

A. Welding Qualifications: Qualify procedures and personnel according to the following:

1. AWS D1.1/D1.1M, "Structural Welding Code - Steel."

1.06 FIELD CONDITIONS

A. Field Measurements: Verify actual locations of walls and other construction contiguous with metal fabrications by field measurements before fabrication.

PART 2 - PRODUCTS

2.01 PERFORMANCE REQUIREMENTS

A. Delegated Design: Engage a qualified professional engineer, as defined in Section 014000 "Quality Requirements," to design railings, including attachment to building construction.

B. Structural Performance: Railings, including attachment to building construction, shall withstand the effects of gravity loads and the following loads and stresses within limits and under conditions indicated:

1. Handrails and Top Rails of Guards:

a. Uniform load of 50 lbf/ ft. applied in any direction.
b. Concentrated load of 200 lbf applied in any direction.
c. Uniform and concentrated loads need not be assumed to act concurrently.

2. Infill of Guards:

a. Concentrated load of 50 lbf applied horizontally on an area of 1 sq. ft.
b. Infill load and other loads need not be assumed to act concurrently.

C. Thermal Movements: Allow for thermal movements from ambient and surface temperature changes.

1. Temperature Change: 120 deg F, ambient; 180 deg F, material surfaces.

2.02 METALS, GENERAL

A. Metal Surfaces, General: Provide materials with smooth surfaces, without seam marks, roller marks, rolled trade names, stains, discolorations, or blemishes.

B. Brackets, Flanges, and Anchors: Cast or formed metal of same type of material and finish as supported rails unless otherwise indicated.

1. Provide type of bracket with flange tapped for concealed anchorage to threaded hanger bolt and that provides 1-1/2-inch clearance from inside face of handrail to finished wall surface.

2.03 STEEL AND IRON

A. Pipe: ASTM A 53/A 53M, Type F or Type S, Grade A, Standard Weight (Schedule 40), unless another grade and weight are required by structural loads.

1. Provide galvanized finish for exterior installations and where indicated.

B. Plates, Shapes, and Bars: ASTM A 36/A 36M.

C. Perforated Metal: Cold-rolled steel sheet, ASTM A 1008/A 1008M, or hot-rolled steel sheet, ASTM A 1011/A 1011M, commercial steel Type B, 0.060 inch thick, with 1/4-inch holes 3/8 inch o.c. in staggered rows.

2.04 FASTENERS

A. General: Provide the following:

1. Ungalvanized-Steel Railings: Plated steel fasteners complying with ASTM B 633 or ASTM F 1941, Class Fe/Zn 5 for zinc coating.

B. Fasteners for Anchoring Railings to Other Construction: Select fasteners of type, grade, and class required to produce connections suitable for anchoring railings to other types of construction indicated and capable of withstanding design loads.

C. Post-Installed Anchors: Torque-controlled expansion anchors or chemical anchors capable of sustaining, without failure, a load equal to 6 times the load imposed when installed in unit masonry and 4 times the load imposed when installed in concrete, as determined by testing according to ASTM E 488/E 488M, conducted by a qualified independent testing agency.

1. Material for Interior Locations: Carbon-steel components zinc-plated to comply with ASTM B 633 or ASTM F 1941, Class Fe/Zn 5, unless otherwise indicated.
2. Material for Exterior Locations and Where Stainless Steel Is Indicated: Alloy Group 1 stainless-steel bolts, ASTM F 593, and nuts, ASTM F 594.

2.05 MISCELLANEOUS MATERIALS

A. Welding Rods and Bare Electrodes: Select according to AWS specifications for metal alloy welded.

B. Universal Shop Primer: Fast-curing, lead- and chromate-free, universal modified-alkyd primer complying with MPI#79 and compatible with topcoat.

1. Use primer containing pigments that make it easily distinguishable from zinc-rich primer.

C. Nonshrink, Nonmetallic Grout: Factory-packaged, nonstaining, noncorrosive, nongaseous grout complying with ASTM C 1107/C 1107M. Provide grout specifically recommended by manufacturer for interior and exterior applications.

2.06 FABRICATION

A. General: Fabricate railings to comply with requirements indicated for design, dimensions, member sizes and spacing, details, finish, and anchorage, but not less than that required to support structural loads.

B. Shop assemble railings to greatest extent possible to minimize field splicing and assembly. Disassemble units only as necessary for shipping and handling limitations. Clearly mark units for reassembly and coordinated installation. Use connections that maintain structural value of joined pieces.

C. Cut, drill, and punch metals cleanly and accurately. Remove burrs and ease edges to a radius of approximately 1/32 inch unless otherwise indicated. Remove sharp or rough areas on exposed surfaces.

D. Form work true to line and level with accurate angles and surfaces.

E. Fabricate connections that are exposed to weather in a manner that excludes water. Provide weep holes where water may accumulate.

F. Cut, reinforce, drill, and tap as indicated to receive finish hardware, screws, and similar items.

G. Connections: Fabricate railings with welded connections unless otherwise indicated.

H. Welded Connections: Cope components at connections to provide close fit, or use fittings designed for this purpose. Weld all around at connections, including at fittings.

1. Use materials and methods that minimize distortion and develop strength and corrosion resistance of base metals.
2. Obtain fusion without undercut or overlap.
3. Remove flux immediately.
4. At exposed connections, finish exposed surfaces smooth and blended so no roughness shows after finishing and welded surface matches contours of adjoining surfaces.

I. Form Changes in Direction as Follows:

1. As detailed.
2. By bending.

J. For changes in direction made by bending, use jigs to produce uniform curvature for each repetitive configuration required. Maintain cross section of member throughout entire bend without buckling, twisting, cracking, or otherwise deforming exposed surfaces of components.

K. Close exposed ends of railing members with prefabricated end fittings.

L. Provide wall returns at ends of wall-mounted handrails unless otherwise indicated. Close ends of returns unless clearance between end of rail and wall is 1/4 inch or less.

M. Brackets, Flanges, Fittings, and Anchors: Provide wall brackets, flanges, miscellaneous fittings, and anchors to interconnect railing members to other work unless otherwise indicated.

1. At brackets and fittings fastened to plaster or gypsum board partitions, provide crush-resistant fillers or other means to transfer loads through wall finishes to structural supports and prevent bracket or fitting rotation and crushing of substrate.

N. Provide inserts and other anchorage devices for connecting railings to concrete or masonry work. Fabricate anchorage devices capable of withstanding loads imposed by railings. Coordinate anchorage devices with supporting structure.

O. Perforated-Metal Infill Panels: Fabricate infill panels from perforated metal made from steel.

1. Edge panels with U-shaped channels made from metal sheet, of same metal as perforated metal and not less than 0.043 inch thick.
2. Orient perforated metal with pattern as indicated on Drawings.

2.07 STEEL AND IRON FINISHES

A. For galvanized railings, provide hot-dip galvanized fittings, brackets, fasteners, sleeves, and other ferrous components.

B. Preparation for Shop Priming: Prepare uncoated ferrous-metal surfaces to comply with SSPC-SP 6/NACE No. 3, “Commercial Blast Cleaning.”

C. Primer Application: Apply shop primer to prepared surfaces of railings unless otherwise indicated. Comply with requirements in SSPC-PA 1, “Shop, Field, and Maintenance Painting of Steel,” for shop painting. Primer need not be applied to surfaces to be embedded in concrete or masonry.

1. Shop prime uncoated railings with universal shop primer unless indicated.
2. Do not apply primer to galvanized surfaces.

PART 3 - EXECUTION

3.01 EXAMINATION

A. Examine plaster and gypsum board assemblies, where reinforced to receive anchors, to verify that locations of concealed reinforcements are clearly marked for Installer. Locate reinforcements and mark locations if not already done.

3.02 INSTALLATION, GENERAL

A. Fit exposed connections together to form tight, hairline joints.

B. Perform cutting, drilling, and fitting required for installing railings. Set railings accurately in location, alignment, and elevation; measured from established lines and levels and free of rack.

1. Do not weld, cut, or abrade surfaces of railing components that are coated or finished after fabrication and that are intended for field connection by mechanical or other means without further cutting or fitting.
2. Set posts plumb within a tolerance of 1/16 inch in 3 feet.
3. Align rails so variations from level for horizontal members and variations from parallel with rake of steps and ramps for sloping members do not exceed 1/4 inch in 12 feet.

C. Adjust railings before anchoring to ensure matching alignment at abutting joints.

D. Fastening to In-Place Construction: Use anchorage devices and fasteners where necessary for securing railings and for properly transferring loads to in-place construction.

3.03 RAILING CONNECTIONS

A. Welded Connections: Use fully welded joints for permanently connecting railing components. Comply with requirements for welded connections in “Fabrication” Article whether welding is performed in the shop or in the field.

B. Expansion Joints: Install expansion joints at locations indicated but not farther apart than required to accommodate thermal movement. Provide slip-joint internal sleeve extending 2 inches beyond joint on either side, fasten internal sleeve securely to one side, and locate joint within 6 inches of post.

3.04 ANCHORING POSTS

A. Form or core-drill holes not less than 5 inches deep and 3/4 inch larger than OD of post for installing posts in concrete. Clean holes of loose material, insert posts, and fill annular space between post and concrete with nonshrink, nonmetallic grout, mixed and placed to comply with anchoring material manufacturer's written instructions.

B. Leave anchorage joint exposed with 1/8-inch buildup, sloped away from post.

C. Anchor posts to metal surfaces with oval flanges, angle type, or floor type as required by conditions, connected to posts and to metal supporting members as follows:
1. For steel pipe railings, weld flanges to post and bolt to metal supporting surfaces.

3.05 ATTACHING RAILINGS

A. Anchor railing ends at walls with round flanges anchored to wall construction and welded to railing ends.

B. Anchor railing ends to metal surfaces with flanges bolted to metal surfaces and welded to railing ends.

C. Attach railings to wall with wall brackets, except where end flanges are used. Locate brackets as indicated or, if not indicated, at spacing required to support structural loads.

D. Secure wall brackets and railing end flanges to building construction as follows:

1. For concrete and solid masonry anchorage, use drilled-in expansion shields and hanger or lag bolts.
2. For wood stud partitions, use hanger or lag bolts set into studs or wood backing between studs. Coordinate with carpentry work to locate backing members.
3. For steel-framed partitions, use hanger or lag bolts set into [**fire-retardant-treated**]wood backing between studs. Coordinate with stud installation to locate backing members.

3.06 ADJUSTING AND CLEANING

A. Touchup Painting: Immediately after erection, clean field welds, bolted connections, and abraded areas of shop paint, and paint exposed areas with the same material as used for shop painting to comply with SSPC-PA 1 requirements for touching up shop-painted surfaces.

1. Apply by brush or spray to provide a minimum 2.0-mil dry film thickness.

3.07 PROTECTION

A. Protect finishes of railings from damage during construction period with temporary protective coverings approved by railing manufacturer. Remove protective coverings at time of Substantial Completion.

END OF SECTION

SECTION 05 58 13
COLUMN COVERS

PART 1 - GENERAL

1.01 SUMMARY

A. Section includes snap-together metal column covers.

1.02 ACTION SUBMITTALS

A. Product Data: For each type of product, including finishing materials.

B. Shop Drawings: Show fabrication and installation details for column covers.

C. Samples for Verification: For each type of exposed finish required, prepared on 6-inch-square Samples of metal of same thickness and material indicated for the Work.

1.03 INFORMATIONAL SUBMITTALS

A. Qualification Data: For fabricator.

1.04 QUALITY ASSURANCE

A. Fabricator Qualifications: A firm experienced in producing column covers similar to that indicated for this Project and with a record of successful in-service performance, as well as sufficient production capacity to produce required units.

1.05 DELIVERY, STORAGE, AND HANDLING

A. Deliver column covers wrapped in protective coverings and strapped together in suitable packs or in heavy-duty cartons. Remove protective coverings before they stain or bond to finished surfaces.

PART 2 - PRODUCTS

2.01 SNAP-TOGETHER COLUMN COVERS

A. Manufacturers: Subject to compliance with requirements, available manufacturers offering products that may be incorporated into the Work include, but are not limited to the following:

1. ATAS International, Inc.

2. Ceilings Plus.
3. Firestone Metal Products, LLC.
4. Fry Reglet Corporation.
5. Gordon Incorporated.
6. Metal Sales & Service, Inc.
7. MM Systems Corporation.
8. Pittcon Industries.

B. Form column covers to shapes indicated from metal of type and minimum thickness indicated below. Return vertical edges and bend to form hook that engages continuous mounting clips.

1. Stainless-Steel Sheet: ASTM A 240/A 240M or ASTM A 666, Type 304, 0.050 inch thick.

   a. Finish: No. 4.

2. Column covers may be fabricated from prefinished metal sheet in lieu of finishing after fabrication provided unfinished edges are concealed from view.
3. Increase metal thickness or reinforce with concealed stiffeners, backing materials, or both, as needed to provide flat surfaces where indicated.
4. Support joints with concealed stiffeners as needed to hold exposed faces of adjoining sheets in flush alignment.
5. Form returns at vertical joints to provide hairline V-joints.
6. Fabricate column covers with hairline horizontal V-joints produced by forming returns on mating ends of column cover sections. Locate horizontal joints as indicated.
7. Apply manufacturer's recommended sound-deadening insulation to backs of column covers.

2.02 MISCELLANEOUS MATERIALS

A. Fasteners: Fabricated from same basic metal and alloy as fastened metal unless otherwise indicated. Do not use metals that are incompatible with materials joined.

1. Provide concealed fasteners for interconnecting column covers and for attaching them to other work unless otherwise indicated.

B. Sound-Deadening Materials:

1. Insulation: Unfaced, mineral-fiber blanket insulation complying with ASTM C 665, Type I, and passing ASTM E 136 test.

2. Mastic: Cold-applied asphalt emulsion complying with ASTM D 1187/D 1187M.

C. Backing Materials: Provided or recommended by column cover manufacturer.

2.03 PAINTS AND COATINGS

A. Universal Shop Primer for Ferrous Metal: Fast-curing, lead- and chromate-free, universal modified-alkyd primer complying with MPI#79 and compatible with topcoat.

B. Bituminous Paint: Cold-applied asphalt emulsion complying with ASTM D 1187/D 1187M.

2.04 FABRICATION, GENERAL

A. Coordinate dimensions and attachment methods of column covers with those of adjoining construction to produce integrated assemblies with closely fitting joints and with edges and surfaces aligned unless otherwise indicated.

B. Form metal to profiles indicated, in maximum lengths to minimize joints. Produce flat, flush surfaces without cracking or grain separation at bends.

2.05 GENERAL FINISH REQUIREMENTS

A. Complete mechanical finishes of flat sheet metal surfaces before fabrication where possible. After fabrication, finish all joints, bends, abrasions, and other surface blemishes to match sheet finish.

B. Protect mechanical finishes on exposed surfaces from damage by applying a strippable, temporary protective covering before shipping.

2.06 STAINLESS-STEEL FINISHES

A. Surface Preparation: Remove tool and die marks and stretch lines, or blend into finish.

B. Directional Satin Finish: No. 4.

PART 3 - EXECUTION

3.01 EXAMINATION

A. Examine substrates, areas, and conditions, with Installer present, for compliance with requirements for installation tolerances and other conditions affecting performance of column covers.

B. Proceed with installation only after unsatisfactory conditions have been corrected.

3.02 INSTALLATION

A. Locate and place column covers plumb and in alignment with adjacent construction. Perform cutting, drilling, and fitting required to install column covers.

1. Do not cut or abrade finishes that cannot be completely restored in the field. Return items with such finishes to the shop for required alterations, followed by complete refinishing, or provide new units as required.

B. Use concealed anchorages where possible.

C. Form tight joints with exposed connections accurately fitted together. Provide reveals and openings for sealants and joint fillers as indicated.

D. Corrosion Protection: Apply bituminous paint or other permanent separation materials on concealed surfaces where metals would otherwise be in direct contact with substrate materials that are incompatible or could result in corrosion or deterioration of either material or finish.

3.03 ADJUSTING AND CLEANING

A. Clean stainless steel according to metal finisher's written instructions in a manner that leaves an undamaged and uniform finish matching approved Sample.

B. Restore finishes damaged during installation and construction period so no evidence remains of correction work. Return items that cannot be refinished in the field to the shop; make required alterations and refinish entire unit or provide new units.

3.04 PROTECTION

A. Protect finishes from damage during construction period. Remove temporary protective coverings at time of Substantial Completion.

END OF SECTION

SECTION 05 73 13
GLAZED DECORATIVE METAL RAILINGS

PART 1 - GENERAL

1.01 SUMMARY

A. Section includes glass-supported railings.

B. Related Sections include:

1. Section 061053 “Miscellaneous Rough Carpentry” for wood blocking for anchoring railings.
2. Section 092216 “Non-Structural Metal Framing” for metal backing for anchoring railings.

1.02 DEFINITIONS

A. Railings: Guards, handrails, and similar devices used for protection of occupants at open-sided floor areas and for pedestrian guidance and support, visual separation, or wall protection.

1.03 COORDINATION AND SCHEDULING

A. Coordinate selection of shop primers with topcoats to be applied over them. Comply with paint and coating manufacturers' written instructions to ensure that shop primers and topcoats are compatible.

B. Coordinate installation of anchorages for railings. Furnish setting drawings, templates, and directions for installing anchorages, including sleeves, concrete inserts, anchor bolts, and items with integral anchors, that are to be embedded in concrete or masonry. Deliver items to Project site in time for installation.

1.04 PREINSTALLATION MEETINGS

A. Preinstallation Conference: Conduct conference at Project site.

1.05 ACTION SUBMITTALS

A. Product Data: For the following:

1. Manufacturer's product lines of railings assembled from standard components.
2. Grout, anchoring cement, and paint products.

B. Shop Drawings: Include plans, elevations, sections, wiring, and attachment details.

C. Samples for Initial Selection: For products involving selection of color, texture, or design, including mechanical finishes.

D. Samples for Verification: For each type of exposed finish required.

1. Sections of each distinctly different linear railing member, including handrails and base shoes.
2. Each type of glass required.
3. Fittings and brackets.
4. Assembled Samples of railing systems, made from full-size components, including top rail, post, handrail, and infill. Show method of finishing members at intersections. Samples need not be full height.

E. Delegated-Design Submittal: For installed products indicated to comply with performance requirements and design criteria, including analysis data signed and sealed by the qualified professional engineer responsible for their preparation.

1.06 INFORMATIONAL SUBMITTALS

A. Evaluation Reports: For post-installed anchors, from ICC-ES.

1.07 QUALITY ASSURANCE

A. Mockups: Build mockups to verify selections made under Sample submittals, to demonstrate aesthetic effects, and to set quality standards for fabrication and installation.

1. Build mockups as shown on Drawings.
2. Build mockups for each form and finish of railing consisting of two posts, top rail, infill area, and anchorage system components that are full height and are not less than 24 inches in length.
3. Subject to compliance with requirements, approved mockups may become part of the completed Work if undisturbed at time of Substantial Completion.

1.08 FIELD CONDITIONS

A. Field Measurements: Verify actual locations of walls and other construction contiguous with railings by field measurements before fabrication and indicate measurements on Shop Drawings.

PART 2 - PRODUCTS

2.01 MANUFACTURERS

A. Basis-of-Design: Design is based VIVA Railings, LLC, "iRAIL Linear Illuminated System." Subject to compliance with requirements, available manufacturers offering products that may be incorporated into the Work include, but are not limited to the following:

1. Blum, Julius & Co., Inc.
2. Laurence, C. R. Co., Inc.
3. Livers Bronze Co.
4. Tri Tech, Inc.

B. Source Limitations: Obtain each type of railing from single source from single manufacturer.

C. Product Options: Information on Drawings and in Specifications establishes requirements for system's aesthetic effects and performance characteristics. Aesthetic effects are indicated by dimensions, arrangements, alignment, and profiles of components and assemblies as they relate to sightlines, to one another, and to adjoining construction. Performance characteristics are indicated by criteria subject to verification by one or more methods, including structural analysis, preconstruction testing, field testing, and in-service performance.

1. Do not modify intended aesthetic effects, as judged solely by Architect, except with Architect's approval. If modifications are proposed, submit comprehensive explanatory data to Architect for review.

2.02 PERFORMANCE REQUIREMENTS

A. Delegated Design: Engage a qualified professional engineer, as defined in Section 014000 “Quality Requirements,” to design railings, including attachment to building construction.

B. General: In engineering railings to withstand structural loads indicated, determine allowable design working stresses of railing materials based on the following:

1. Stainless Steel: 60 percent of minimum yield strength.
2. Glass: 25 percent of mean modulus of rupture (50 percent probability of breakage), as listed in “Mechanical Properties” in AAMA's Aluminum Curtain Wall Series No. 12, “Structural Properties of Glass.”

C. Structural Performance: Railings, including attachment to building construction, shall withstand the effects of gravity loads and the following loads and stresses within limits and under conditions indicated:

1. Handrails and Top Rails of Guards:

a. Uniform load of 50 lbf/ft. applied in any direction.
b. Concentrated load of 200 lbf applied in any direction.
c. Uniform and concentrated loads need not be assumed to act concurrently.

2. Infill of Guards:

a. Concentrated load of 50 lbf applied horizontally on an area of 1 sq. ft.
b. Infill load and other loads need not be assumed to act concurrently.

3. Glass-Supported Railings: Support each section of top rail by a minimum of three glass panels or by other means so top rail will remain in place if any one panel fails.

D. Thermal Movements: Allow for thermal movements from ambient and surface temperature changes acting on exterior railings by preventing buckling, opening of joints, overstressing of components, failure of connections, and other detrimental effects.

1. Temperature Change: 120 deg F, ambient; 180 deg F, material surfaces.

2.03 METALS, GENERAL

A. Metal Surfaces, General: Provide materials with smooth surfaces, without seam marks, roller marks, rolled trade names, stains, discolorations, or blemishes.

B. Brackets, Flanges, and Anchors: Same metal and finish as supported rails unless otherwise indicated.

2.04 STAINLESS STEEL

A. Tubing: ASTM A 554, Grade MT 304.

B. Castings: ASTM A 743/A 743M, Grade CF 8 or CF 20.

C. Sheet, Strip, Plate, and Flat Bar: ASTM A 666 or ASTM A 240/A 240M, Type 304.

D. Bars and Shapes: ASTM A 276, Type 304.

2.05 GLASS AND GLAZING MATERIALS

A. Safety Glazing: Glazing shall comply with 16 CFR 1201, Category II.

B. Laminated Glass: ASTM C1172. Use materials that have a proven record of no tendency to bubble, discolor, or lose physical and mechanical properties after fabrication and installation.

1. Manufacturer: Subject to compliance with requirements, available manufacturers offering products that may be incorporated into the Work include, but are not limited to, the following:

a. Eastman Chemical Company.
b. Kuraray America.

2. Construction: Two plies of ultraclear fully tempered float glass. Laminate glass with ionoplast interlayer to comply with interlayer manufacturer's written instructions.
3. Interlayer Thickness: 0.089 mm.
4. Interlayer Color: Clear unless otherwise indicated.
5. Kind: LT (laminated tempered).
6. Glass Plies for Structural Glass Balusters: 8.0 mm thick each.

C. Safety Glazing Labeling: Permanently mark glass with certification label of the SGCC or another certification agency acceptable to authorities having jurisdiction. Label shall indicate manufacturer's name, type of glass, thickness, and safety glazing standard with which glass complies.

D. Glazing Cement and Accessories for Structural Glazing: Glazing cement, setting blocks, shims, and related accessories as recommended or supplied by railing manufacturer for installing structural glazing in metal subrails.

1. Glazing Cement: Nonshrinking organic cement designed for curing by passing an electric current through metal subrail holding glass panel, as standard with manufacturer.

2.06 FASTENERS

A. Fastener Materials: Unless otherwise indicated, provide the following:

1. Retain or revise applicable requirements in subparagraphs below.

2. Stainless Steel Components: Type 304 stainless steel fasteners.
3. Dissimilar Metals: Type 304 stainless steel fasteners.

B. Fasteners for Anchoring to Other Construction: Select fasteners of type, grade, and class required to produce connections suitable for anchoring railings to other types of construction indicated and capable of withstanding design loads.

C. Provide concealed fasteners for interconnecting railing components and for attaching railings to other work unless exposed fasteners are unavoidable.

1. Provide tamper-resistant flat-head machine screws for exposed fasteners unless otherwise indicated.

D. Post-Installed Anchors: Fastener systems with working capacity greater than or equal to the design load, according to an evaluation report acceptable to authorities having jurisdiction, based on ICC-ES AC193 or ICC-ES AC308.

1. Material for Interior Locations: Carbon-steel components zinc plated to comply with ASTM B 633 or ASTM F 1941, Class Fe/Zn 5, unless otherwise indicated.

E. LED illuminated Rail: Viva Railings iRail, LED light bar sealed by an aluminum housing encased in a clear resin which is outdoor wet-location listed with following specifications:

1. Power: Input: 100-120V AC./ Output: 12V DC / Driver: 30W, 60W, 100W, 200W.
2. Rating: IP67
3. Power Consumption: Med Output 2.16 watts per/ft.
4. Light Color – Cool White Warm White (3000K-3500K)
5. Light Output: Cool White Med Output 120 Lumens/Ft.
6. Lens: Clear.

2.07 MISCELLANEOUS MATERIALS

A. Wood Rails: Clear, straight-grained hardwood rails.

1. Species: White oak.
2. Finish: Manufacturer's standard.
3. Staining: As selected by Architect from manufacturer's full range.
4. Diameter: 1-1/2 inch.
5. Profile: Round.
6. Endcaps: Wood dome endcap, species to match wood rails.

B. Handrail Bracket: Glass mounted, type 304 stainless-steel bracket for 1-1/2 inch wood rails.

1. Style: As selected by Architect.

C. Bituminous Paint: Cold-applied asphalt emulsion complying with ASTM D 1187/D 1187M.

D. Nonshrink, Nonmetallic Grout: Factory-packaged, nonstaining, noncorrosive, nongaseous grout complying with ASTM C 1107/C 1107M. Provide grout specifically recommended by manufacturer for interior and exterior applications.

E. Anchoring Cement: Factory-packaged, nonshrink, nonstaining, hydraulic-controlled expansion cement formulation for mixing with water at Project site to create pourable anchoring, patching, and grouting compound.

1. Water-Resistant Product: Where indicated provide formulation that is resistant to erosion from water exposure without needing protection by a sealer or waterproof coating and that is recommended by manufacturer for exterior use.

2.08 FABRICATION

A. General: Fabricate railings to comply with requirements indicated for design, dimensions, member sizes and spacing, details, finish, and anchorage, but not less than that required to support structural loads.

B. Assemble railings in the shop to greatest extent possible to minimize field splicing and assembly. Disassemble units only as necessary for shipping and handling limitations. Clearly mark units for reassembly and coordinated installation. Use connections that maintain structural value of joined pieces.

C. Cut, drill, and punch metals cleanly and accurately. Remove burrs and ease edges to a radius of approximately 1/32 inch unless otherwise indicated. Remove sharp or rough areas on exposed surfaces.

D. Form work true to line and level with accurate angles and surfaces.

E. Fabricate connections that will be exposed to weather in a manner to exclude water. Provide weep holes where water may accumulate. Locate weep holes in inconspicuous locations.

F. Cut, reinforce, drill, and tap as indicated to receive finish hardware, screws, and similar items.

G. Mechanical Connections: Connect members with concealed mechanical fasteners and fittings. Fabricate members and fittings to produce flush, smooth, rigid, hairline joints.

1. Fabricate splice joints for field connection using an epoxy structural adhesive if this is manufacturer's standard splicing method.

H. Form changes in direction as follows:

1. By radius bends of radius indicated.

I. Close exposed ends of hollow railing members with prefabricated end fittings.

J. Brackets, Flanges, Fittings, and Anchors: Provide wall brackets, flanges, miscellaneous fittings, and anchors to interconnect railing members to other work where indicated.

1. At brackets and fittings fastened to plaster or gypsum board partitions, provide crush-resistant fillers, or other means to transfer loads through wall finishes to structural supports and to prevent bracket or fitting rotation and crushing of substrate.

K. Provide inserts and other anchorage devices for connecting railings to concrete or masonry work. Fabricate anchorage devices capable of withstanding loads imposed by railings. Coordinate anchorage devices with supporting structure.

2.09 GLAZING PANEL FABRICATION

A. General: Fabricate to sizes and shapes required; provide for proper edge clearance and bite on glazing panels.

1. Clean-cut or flat-grind edges at butt-glazed sealant joints to produce square edges with slight chamfers at junctions of edges and faces.
2. Grind smooth exposed edges, including those at open joints, to produce square edges with slight chamfers at junctions of edges and faces.

B. Infill Panels: Provide laminated tempered glass panels for both straight and curved sections.

2.10 GENERAL FINISH REQUIREMENTS

A. Protect mechanical finishes on exposed surfaces from damage by applying a strippable, temporary protective covering before shipment.

B. Appearance of Finished Work: Noticeable variations in same piece are not acceptable. Variations in appearance of abutting or adjacent pieces are acceptable if they are within one-half of the range of approved Samples. Variations in appearance of other components are acceptable if they are within the range of approved Samples and are assembled or installed to minimize contrast.

C. Provide exposed fasteners with finish matching appearance, including color and texture, of railings.

2.11 STAINLESS STEEL FINISHES

A. Surface Preparation: Remove tool and die marks and stretch lines, or blend into finish.

B. Directional Satin Finish: No. 4.

C. When polishing is completed, passivate and rinse surfaces. Remove embedded foreign matter and leave surfaces chemically clean.

PART 3 - EXECUTION

3.01 INSTALLATION, GENERAL

A. Fit exposed connections together to form tight, hairline joints.

B. Perform cutting, drilling, and fitting required for installing railings. Set railings accurately in location, alignment, and elevation; measured from established lines and levels and free of rack.

1. Do not weld, cut, or abrade surfaces of railing components that have been coated or finished after fabrication and that are intended for field connection by mechanical or other means without further cutting or fitting.

2. Align rails so variations from level for horizontal members and variations from parallel with rake of steps and ramps for sloping members do not exceed 1/4 inch in 12 feet.

C. Control of Corrosion: Prevent galvanic action and other forms of corrosion by insulating metals and other materials from direct contact with incompatible materials.

D. Adjust railings before anchoring to ensure matching alignment at abutting joints.

E. Fastening to In-Place Construction: Use anchorage devices and fasteners where necessary for securing railings and for properly transferring loads to in-place construction.

3.02 RAILING CONNECTIONS

A. Nonwelded Connections: Use mechanical or adhesive joints for permanently connecting railing components. Use wood blocks and padding to prevent damage to railing members and fittings. Seal recessed holes of exposed locking screws using plastic cement filler colored to match finish of railings.

B. Expansion Joints: Install expansion joints at locations indicated but not farther apart than required to accommodate thermal movement. Provide slip-joint internal sleeve extending 2 inches beyond joint on either side, fasten internal sleeve securely to one side, and locate joint within 6 inches of post.

3.03 INSTALLING GLASS PANELS

A. Glass-Supported Railings: Install assembly to comply with railing manufacturer's written instructions.

1. Attach base channel to building structure, then insert glass into base channel and bond with glazing cement.

a. Support glass panels in base channel at quarter points with channel-shaped setting blocks that also act as shims to maintain uniform space for glazing cement. Fill remaining space in base channel with glazing cement for uniform support of glass.

2. Adjust spacing of glass panels so gaps between panels are equal before securing in position.
3. Erect glass railings under direct supervision of manufacturer's authorized technical personnel.

3.04 FIELD QUALITY CONTROL

A. Testing Agency: Owner will engage a qualified testing agency to perform tests and inspections and to prepare test reports. Payment for these services will be made by Owner.

B. Extent and Testing Methodology: Testing agency will randomly select completed railing assemblies for testing that are representative of different railing designs and conditions in the completed Work. Test railings according to ASTM E 894 and ASTM E 935 for compliance with performance requirements.

C. Remove and replace railings where test results indicate that they do not comply with specified requirements unless they can be repaired in a manner satisfactory to Architect and comply with specified requirements.

D. Perform additional testing and inspecting, at Contractor's expense, to determine compliance of replaced or additional work with specified requirements.

3.05 CLEANING

A. Clean aluminum and stainless steel by washing thoroughly with water and soap, rinsing with clean water, and wiping dry.

B. Clean and polish glass as recommended in writing by manufacturer. Wash both exposed surfaces in each area of Project not more than four days before date scheduled for inspections that establish date of Substantial Completion.

C. Clean wood rails by wiping with a damp cloth and then wiping dry.

3.06 PROTECTION

A. Protect finishes of railings from damage during construction period with temporary protective coverings approved by railing manufacturer. Remove protective coverings at time of Substantial Completion.

B. Restore finishes damaged during installation and construction period so no evidence remains of correction work. Return items that cannot be refinished in the field to the shop; make required alterations and refinish entire unit, or provide new units.

END OF SECTION

SECTION 06 10 53
MISCELLANEOUS ROUGH CARPENTRY

PART 1 - GENERAL

1.01 SUMMARY

A. Section includes:

1. Wood blocking and nailers.
2. Plywood backing panels.
3. Fiber-Cement lap panels.

1.02 DEFINITIONS

A. Boards or Strips: Lumber of less than 2 inches nominal size in least dimension.

B. Dimension Lumber: Lumber of 2 inches nominal or greater size but less than 5 inches nominal size in least dimension.

1.03 ACTION SUBMITTALS

A. Product Data: For each type of process and factory-fabricated product. Indicate component materials and dimensions and include construction and application details.

1. Include data for wood-preservative treatment from chemical treatment manufacturer and certification by treating plant that treated materials comply with requirements. Indicate type of preservative used and net amount of preservative retained.
2. Include data for fire-retardant treatment from chemical treatment manufacturer and certification by treating plant that treated materials comply with requirements. Include physical properties of treated materials based on testing by a qualified independent testing agency.
3. For fire-retardant treatments, include physical properties of treated lumber both before and after exposure to elevated temperatures, based on testing by a qualified independent testing agency according to ASTM D 5664.
4. For products receiving a waterborne treatment, include statement that moisture content of treated materials was reduced to levels specified before shipment to Project site.

1.04 INFORMATIONAL SUBMITTALS

A. Evaluation Reports: For the following, from ICC-ES:

1. Preservative-treated wood.
2. Fire-retardant-treated wood.

PART 2 - PRODUCTS

2.01 WOOD PRODUCTS, GENERAL

A. Lumber: DOC PS 20 and applicable rules of grading agencies indicated. If no grading agency is indicated, provide lumber that complies with the applicable rules of any rules-writing agency certified by the ALSC Board of Review. Provide lumber graded by an agency certified by the ALSC Board of Review to inspect and grade lumber under the rules indicated.

1. Factory mark each piece of lumber with grade stamp of grading agency.
2. Dress lumber, S4S, unless otherwise indicated.

B. Maximum Moisture Content of Lumber: 19 percent unless otherwise indicated.

2.02 WOOD-PRESERVATIVE-TREATED MATERIALS

A. Preservative Treatment by Pressure Process: AWPA U1; Use Category UC2.

1. Preservative Chemicals: Acceptable to authorities having jurisdiction and containing no arsenic or chromium.

B. Kiln-dry lumber after treatment to a maximum moisture content of 19 percent. Do not use material that is warped or does not comply with requirements for untreated material.

C. Mark lumber with treatment quality mark of an inspection agency approved by the ALSC Board of Review.

D. Application: Treat items indicated on Drawings, and wood blocking and similar concealed members in contact with masonry or concrete.

2.03 FIRE-RETARDANT-TREATED MATERIALS

A. General: Where fire-retardant-treated materials are indicated, materials shall comply with requirements in this article, that are acceptable to authorities having jurisdiction, and with fire-test-response characteristics specified as determined by testing identical products per test method indicated by a qualified testing agency.

B. Fire-Retardant-Treated Lumber and Plywood by Pressure Process: Products with a flame-spread index of 25 or less when tested according to ASTM E 84, and with no evidence of significant progressive combustion when the test is extended an additional 20 minutes, and with the flame front not extending more than 10.5 feet beyond the centerline of the burners at any time during the test.

1. Treatment shall not promote corrosion of metal fasteners.
2. Interior Type A: Treated materials shall have a moisture content of 28 percent or less when tested according to ASTM D 3201 at 92 percent relative humidity. Use where exterior type is not indicated.

C. Kiln-dry lumber after treatment to a maximum moisture content of 19 percent. Kiln-dry plywood after treatment to a maximum moisture content of 15 percent.

D. Identify fire-retardant-treated wood with appropriate classification marking of qualified testing agency.

E. Application: Treat items indicated on Drawings, and the following:

1. Concealed blocking.
2. Plywood backing panels.

2.04 MISCELLANEOUS LUMBER

A. General: Provide miscellaneous lumber indicated and lumber for support or attachment of other construction, including the following:

1. Blocking.
2. Nailers.

B. Dimension Lumber Items: Standard, Stud, or No. 3 grade lumber of any species.

C. Concealed Boards: 19 percent maximum moisture content of any of the following species and grades:

1. Mixed southern pine or southern pine, No. 3 grade; SPIB.
2. Western woods, Standard or No. 3 Common grade; WCLIB or WWPA.

D. For blocking not used for attachment of other construction, Utility, Stud, or No. 3 grade lumber of any species may be used provided that it is cut and selected to eliminate defects that will interfere with its attachment and purpose.

E. For blocking and nailers used for attachment of other construction, select and cut lumber to eliminate knots and other defects that will interfere with attachment of other work.

2.05 PLYWOOD BACKING PANELS

A. Equipment Backing Panels: Plywood, DOC PS 1, Exterior, C-C Plugged, fire-retardant treated, in thickness indicated or, if not indicated, not less than 1/2-inch nominal thickness.

2.06 FIBER-CEMENT LAP PANELS

A. General: ASTM C 1186, Type A, Grade II, fiber-cement board, noncombustible when tested according to ASTM E 136; with a flame-spread index of 25 or less when tested according to ASTM E 84.

1. Basis of Design: Design is based on James Hardie Building Products, Inc. “HardiPlank Lap Siding System.” Subject to compliance with requirements, available manufacturers offering products that may be incorporated into the Work include, but are not limited to the following:

a. Allura USA.
b. Plycem, an Elementia Company.
c. Nichiha Fiber Cement.
d. Swisspearl Group.

B. Labeling: Provide fiber-cement siding that is tested and labeled according to ASTM C 1186 by a qualified testing agency acceptable to authorities having jurisdiction.

C. Panel:

1. Thickness: 5/16 inch.
2. Siding Nominal Dimensions: 4 feet – 0 inches x 8 feet – 0 inches.
3. Texture: Smooth.
4. Pre-primed.

2.07 FASTENERS

A. General: Provide fasteners of size and type indicated that comply with requirements specified in this article for material and manufacture.

1. Where carpentry is exposed to weather, in ground contact, pressure-preservative treated, or in area of high relative humidity, provide fasteners of Type 304 stainless steel.

B. Nails, Brads, and Staples: ASTM F 1667.

C. Screws for Fastening to Metal Framing: ASTM C 1002, length as recommended by screw manufacturer for material being fastened.

D. Power-Driven Fasteners: Fastener systems with an evaluation report acceptable to authorities having jurisdiction, based on ICC-ES AC70.

E. Panel Fasteners and Accessories: As recommended by manufacturer for complete installation of panel system.

1. Fasteners: 316 stainless steel bugle head square drive screw, 1-5/8 in. by 0.39 in.
2. Starter Tracks and Clips: Manufacturer's standard stainless steel.

2.08 MISCELLANEOUS MATERIALS

A. Flexible Flashing: Composite, self-adhesive, flashing product consisting of a pliable, butyl rubber compound, bonded to a high-density polyethylene film, aluminum foil, or spunbonded polyolefin to produce an overall thickness of not less than 0.025 inch.

PART 3 - EXECUTION

3.01 INSTALLATION, GENERAL

A. Framing Standard: Comply with AF&PA's WCD 1, “Details for Conventional Wood Frame Construction,” unless otherwise indicated.

B. Set carpentry to required levels and lines, with members plumb, true to line, cut, and fitted. Fit carpentry accurately to other construction. Locate nailers, blocking, and similar supports to comply with requirements for attaching other construction.

C. Install plywood backing panels by fastening to studs; coordinate locations with utilities requiring backing panels. Install fire-retardant-treated plywood backing panels with classification marking of testing agency exposed to view.

D. Provide blocking and framing as indicated and as required to support facing materials, fixtures, specialty items, and trim.

1. Provide metal clips for fastening gypsum board at corners and intersections where framing or blocking does not provide a surface for fastening edges of panels. Space clips not more than 16 inches o.c.

E. Where wood-preservative-treated lumber is installed adjacent to metal decking, install continuous flexible flashing separator between wood and metal decking.

F. Securely attach carpentry work to substrate by anchoring and fastening as indicated, complying with the following:

1. Table 2304.9.1, “Fastening Schedule,” in ICC's International Building Code.
2. FM Global Property Loss Prevention Data Sheet 1-49 for wood blocking and nailers at roofing and flashing.
3. ICC-ES evaluation report for fastener.

G. Use steel common nails unless otherwise indicated. Select fasteners of size that will not fully penetrate members where opposite side will be exposed to view or will receive finish materials. Make tight connections between members. Install fasteners without splitting wood. Drive nails snug but do not countersink nail heads unless otherwise indicated.

3.02 WOOD BLOCKING AND NAILER INSTALLATION

A. Install where indicated and where required for attaching other work. Form to shapes indicated and cut as required for true line and level of attached work. Coordinate locations with other work involved.

B. Attach items to substrates to support applied loading. Recess bolts and nuts flush with surfaces unless otherwise indicated.

3.03 PROTECTION

A. Protect miscellaneous rough carpentry from weather. If, despite protection, miscellaneous rough carpentry becomes wet, apply EPA-registered borate treatment. Apply borate solution by spraying to comply with EPA-registered label.

END OF SECTION

SECTION 06 16 00
SHEATHING

PART 1 - GENERAL

1.01 SUMMARY

A. Section includes wall sheathing.

1.02 PREINSTALLATION MEETINGS

A. Preinstallation Conference: Conduct conference at Project site.

1.03 ACTION SUBMITTALS

A. Product Data: For each type of process and factory-fabricated product. Indicate component materials and dimensions and include construction and application details.

1.04 QUALITY ASSURANCE

A. Mockups: Provide sheathing and accessories required to construct integrated exterior mockup specified in Division 01 Section “Mockups.”

1.05 DELIVERY, STORAGE, AND HANDLING

A. Stack panels flat with spacers beneath and between each bundle to provide air circulation. Protect sheathing from weather by covering with waterproof sheeting, securely anchored. Provide for air circulation around stacks and under coverings.

PART 2 - PRODUCTS

2.01 PERFORMANCE REQUIREMENTS

A. Fire-Resistance Ratings: As tested according to ASTM E 119; testing by a qualified testing agency. Identify products with appropriate markings of applicable testing agency.

1. Fire-Resistance Ratings: Indicated by design designations from UL's “Fire Resistance Directory” or from the listings of another qualified testing agency.

2.02 WOOD PANEL PRODUCTS

A. Thickness: As needed to comply with requirements specified, but not less than thickness indicated.

B. Factory mark panels to indicate compliance with applicable standard.

C. Fire Rating: As indicated on Drawings.

2.03 WALL SHEATHING

A. Glass-Mat Gypsum Sheathing: ASTM C 1177/1177M.

1. Products: Subject to compliance with requirements, available products that may be incorporated into the Work include, but are not limited to the following:

a. CertainTeed Corporation; GlasRoc.
b. Georgia-Pacific Gypsum LLC; Dens-Glass Gold.
c. National Gypsum Company; Gold Bond eXP Extended Exposure Sheathing.
d. USG Corporation; Securock.

2. Type and Thickness: Type X, 5/8 inch thick.

2.04 FASTENERS

A. General: Provide fasteners of size and type indicated that comply with requirements specified in this article for material and manufacture.

1. For wall sheathing, provide fasteners with hot-dip zinc coating complying with ASTM A 153/A 153M.

B. Nails, Brads, and Staples: ASTM F 1667.

C. Power-Driven Fasteners: Fastener systems with an evaluation report acceptable to authorities having jurisdiction, based on ICC-ES AC70.

D. Screws for Fastening Wood Structural Panels to Cold-Formed Metal Framing: ASTM C 954, except with wafer heads and reamer wings, length as recommended by screw manufacturer for material being fastened.

E. Screws for Fastening Gypsum Sheathing to Cold-Formed Metal Framing: Steel drill screws, in length recommended by sheathing manufacturer for thickness of sheathing to be attached.

1. For steel framing less than 0.0329 inch thick, use screws that comply with ASTM C 1002.
2. For steel framing from 0.033 to 0.112 inch thick, use screws that comply with ASTM C 954.

2.05 SHEATHING JOINT-AND-PENETRATION TREATMENT MATERIALS

A. Sealant for Glass-Mat Gypsum Sheathing: Silicone emulsion sealant complying with ASTM C 834, compatible with sheathing tape and sheathing and recommended by tape and sheathing manufacturers for use with glass-fiber sheathing tape and for covering exposed fasteners.

1. Sheathing Tape: Self-adhering glass-fiber tape, minimum 2 inches wide, 10 by 10 or 10 by 20 threads/inch, of type recommended by sheathing and tape manufacturers for use with

silicone emulsion sealant in sealing joints in glass-mat gypsum sheathing and with a history of successful in-service use.

PART 3 - EXECUTION

3.01 INSTALLATION, GENERAL

A. Do not use materials with defects that impair quality of sheathing or pieces that are too small to use with minimum number of joints or optimum joint arrangement. Arrange joints so that pieces do not span between fewer than three support members.

B. Cut panels at penetrations, edges, and other obstructions of work; fit tightly against abutting construction unless otherwise indicated.

C. Securely attach to substrate by fastening as indicated, complying with the following:

1. Table 2304.9.1, “Fastening Schedule,” in the ICC's International Building Code.
2. ICC-ES evaluation report for fastener.

D. Coordinate wall sheathing installation with flashing and joint-sealant installation so these materials are installed in sequence and manner that prevent exterior moisture from passing through completed assembly.

E. Do not bridge building expansion joints; cut and space edges of panels to match spacing of structural support elements.

F. Coordinate sheathing installation with installation of materials installed over sheathing so sheathing is not exposed to precipitation or left exposed at end of the workday when rain is forecast.

3.02 GYPSUM SHEATHING INSTALLATION

A. Comply with GA-253 and with manufacturer's written instructions.

1. Fasten gypsum sheathing to cold-formed metal framing with screws.
2. Install panels with a 3/8-inch gap where non-load-bearing construction abuts structural elements.
3. Install panels with a 1/4-inch gap where they abut masonry or similar materials that might retain moisture, to prevent wicking.

B. Apply fasteners so heads bear tightly against face of sheathing, but do not cut into facing.

C. Horizontal Installation: Install sheathing with V-grooved edge down and tongue edge up. Interlock tongue with groove to bring long edges in contact with edges of adjacent panels without forcing. Abut ends over centers of studs, and stagger end joints of adjacent panels not less than one stud spacing. Attach at perimeter and within field of panel to each stud.

1. Space fasteners approximately 8 inches o.c. and set back a minimum of 3/8 inch from edges and ends of panels.

2. For sheathing under stucco cladding, panels may be initially tacked in place with screws if overlying self-furring metal lath is screw-attached through sheathing to studs immediately after sheathing is installed.

D. Vertical Installation: Install vertical edges centered over studs. Abut ends and edges with those of adjacent panels. Attach at perimeter and within field of panel to each stud.

1. Space fasteners approximately 8 inches o.c. and set back a minimum of 3/8 inch from edges and ends of panels.
2. For sheathing under stucco cladding, panels may be initially tacked in place with screws if overlying self-furring metal lath is screw-attached through sheathing to studs immediately after sheathing is installed.

E. Seal sheathing joints according to sheathing manufacturer's written instructions.

1. Apply elastomeric sealant to joints and fasteners and trowel flat. Apply sufficient amount of sealant to completely cover joints and fasteners after troweling. Seal other penetrations and openings.
2. Apply glass-fiber sheathing tape to glass-mat gypsum sheathing joints and apply and trowel sealant to embed entire face of tape in sealant. Apply sealant to exposed fasteners with a trowel so fasteners are completely covered. Seal other penetrations and openings.
3. Joint treatment may be omitted upon written recommendation of manufacturer of air barrier materials.

END OF SECTION

SECTION 06 20 23
INTERIOR FINISH CARPENTRY

PART 1 - GENERAL

1.01 SUMMARY

A. Section includes:

1. Standing and running trim for field-applied paint finish

B. Related Sections include:

1. Division 09 Section “Interior Painting” for priming and backpriming of interior finish carpentry:

1.02 ACTION SUBMITTALS

A. Product Data: For each type of process and factory-fabricated product. Indicate component materials, dimensions, profiles, textures, and colors and include construction and application details.

B. Samples for Initial Selection: For each type of product involving selection of colors, profiles, or textures.

1.03 QUALITY ASSURANCE

A. Mockups: Build mockups to verify selections made under Sample submittals and to demonstrate aesthetic effects and set quality standards for fabrication and installation.

1. Build mockup of typical lumber trim installation as directed by Architect, not less than 72 inches long.
2. Approval of mockups does not constitute approval of deviations from the Contract Documents contained in mockups unless Architect specifically approves such deviations in writing.
3. Subject to compliance with requirements, approved mockups may become part of the completed Work if undisturbed at time of Substantial Completion.

1.04 DELIVERY, STORAGE, AND HANDLING

A. Stack lumber, plywood, and other panels flat with spacers between each bundle to provide air circulation. Protect materials from weather by covering with waterproof sheeting, securely anchored. Provide for air circulation around stacks and under coverings.

B. Deliver interior finish carpentry materials only when environmental conditions meet requirements specified for installation areas. If interior finish carpentry materials must be stored in other than installation areas, store only where environmental conditions meet requirements specified for installation areas.

1.05 FIELD CONDITIONS

A. Environmental Limitations: Do not deliver or install interior finish carpentry materials until building is enclosed and weatherproof, wet work in space is completed and nominally dry, and HVAC system is operating and maintaining temperature and relative humidity at occupancy levels during the remainder of the construction period.

B. Do not install finish carpentry materials that are wet, moisture damaged, or mold damaged.

1. Indications that materials are wet or moisture damaged include, but are not limited to, discoloration, sagging, or irregular shape.
2. Indications that materials are mold damaged include, but are not limited to, fuzzy or splotchy surface contamination and discoloration.

PART 2 - PRODUCTS

2.01 MATERIALS, GENERAL

A. Lumber: DOC PS 20 and applicable rules of grading agencies indicated. If no grading agency is indicated, comply with the applicable rules of any rules-writing agency certified by the American Lumber Standard Committee's Board of Review. Grade lumber by an agency certified by the American Lumber Standard Committee's Board of Review to inspect and grade lumber under the rules indicated.

1. Factory mark each piece of lumber with grade stamp of grading agency.
2. For exposed lumber, mark grade stamp on end or back of each piece, or omit grade stamp and provide certificates of grade compliance issued by grading agency.

2.02 INTERIOR TRIM

A. Moldings for Opaque Finish (Painted Finish): Made to patterns included in MMPA's “WM/Series Wood Moulding Patterns” as indicated on Drawings.

1. Softwood Moldings: MMPA WM 4, P grade.

   a. Species: Eastern white, Idaho white pine, lodgepole pine, ponderosa, radiata, or sugar pine, or southern pine.
   b. Maximum Moisture Content: 15 percent with at least 85 percent of shipment at 12 percent or less.

2. Finger Jointing: Allowed.
3. Molding Patterns: As indicated.

2.03 MISCELLANEOUS MATERIALS

A. Fasteners for Interior Finish Carpentry: Nails, screws, and other anchoring devices of type, size, material, and finish required for application indicated to provide secure attachment, concealed where possible.

PART 3 - EXECUTION

3.01 EXAMINATION

A. Examine substrates, with Installer present, for compliance with requirements for installation tolerances and other conditions affecting performance.

B. Examine finish carpentry materials before installation. Reject materials that are wet, moisture damaged, and mold damaged.

C. Proceed with installation only after unsatisfactory conditions have been corrected.

3.02 PREPARATION

A. Clean substrates of projections and substances detrimental to application.

3.03 INSTALLATION, GENERAL

A. Do not use materials that are unsound, warped, improperly treated or finished, inadequately seasoned, too small to fabricate with proper jointing arrangements, or with defective surfaces, sizes, or patterns.

B. Install interior finish carpentry level, plumb, true, and aligned with adjacent materials. Use concealed shims where necessary for alignment.

1. Scribe and cut interior finish carpentry to fit adjoining work. Refinish and seal cuts as recommended by manufacturer.
2. Countersink fasteners, fill surface flush, and sand unless otherwise indicated.
3. Install to tolerance of 1/8 inch in 96 inches for level and plumb. Install adjoining interior finish carpentry with 1/32-inch maximum offset for flush installation and 1/16-inch maximum offset for reveal installation.

3.04 STANDING AND RUNNING TRIM INSTALLATION

A. Install with minimum number of joints practical, using full-length pieces from maximum lengths of lumber available. Do not use pieces less than 24 inches long, except where necessary. Stagger joints in adjacent and related standing and running trim. Cope at returns, miter at outside corners, and cope at inside corners to produce tight-fitting joints with full-surface contact throughout length of joint. Use scarf joints for end-to-end joints.

1. Install trim after gypsum-board joint finishing operations are completed.
2. Install without splitting; drill pilot holes before fastening where necessary to prevent splitting. Fasten to prevent movement or warping. Countersink fastener heads on exposed carpentry work and fill holes.

3.05 ADJUSTING

A. Replace interior finish carpentry that is damaged or does not comply with requirements. Interior finish carpentry may be repaired or refinished if work complies with requirements and shows no evidence of repair or refinishing. Adjust joinery for uniform appearance.

3.06 CLEANING

A. Clean interior finish carpentry on exposed and semiexposed surfaces. Restore damaged or soiled areas and touch up factory-applied finishes, if any.

3.07 PROTECTION

A. Protect installed products from damage from weather and other causes during construction.

B. Remove and replace finish carpentry materials that are wet, moisture damaged, and mold damaged.

1. Indications that materials are wet or moisture damaged include, but are not limited to, discoloration, sagging, or irregular shape.
2. Indications that materials are mold damaged include, but are not limited to, fuzzy or splotchy surface contamination and discoloration.

END OF SECTION

SECTION 06 41 16
PLASTIC-LAMINATE-FACED ARCHITECTURAL CABINETS

PART 1 - GENERAL

1.01 SUMMARY

A. Section includes:

1. Plastic-laminate-faced architectural cabinets.
2. Grommets and other accessories as indicated on Drawings.
3. Wood furring, blocking, shims, and hanging strips for installing plastic-laminate-faced architectural cabinets unless concealed within other construction before cabinet installation.

B. Related Sections include Division 12 sections for countertops installed over plastic-laminate-faced architectural cabinets.

1.02 PREINSTALLATION MEETINGS

A. Preinstallation Conference: Conduct conference at Project site.

1.03 ACTION SUBMITTALS

A. Product Data: For each type of product, including panel products, high-pressure decorative laminate, and cabinet hardware and accessories.

B. Shop Drawings: Show location of each item, dimensioned plans and elevations, large-scale details, attachment devices, and other components.

1. Show details full size.
2. Show locations and sizes of furring, blocking, and hanging strips, including concealed blocking and reinforcement specified in other Sections.
3. Show locations and sizes of cutouts and holes for electrical switches and outlets and other items installed in architectural plastic-laminate cabinets.

C. Samples for Verification:

1. Plastic laminates, 8 by 10 inches, for each color, pattern, and surface finish, with one sample applied to core material and specified edge material applied to one edge.
2. Corner pieces as follows:

   a. Cabinet-front frame joints between stiles and rails, as well as exposed end pieces, 18 inches high by 18 inches wide by 6 inches deep.

3. Exposed cabinet hardware and accessories, one unit for each type and finish.
4. Grommets, one unit for each type and finish.

1.04 INFORMATIONAL SUBMITTALS

A. Qualification Data: For Installer.

1.05 QUALITY ASSURANCE

A. Fabricator Qualifications: Shop that employs skilled workers with five year’s experience fabricating custom products similar to those required for this Project and whose products have a record of successful in-service performance.

1.06 DELIVERY, STORAGE, AND HANDLING

A. Do not deliver cabinets until painting and similar operations that could damage woodwork have been completed in installation areas. If cabinets must be stored in other than installation areas, store only in areas where environmental conditions comply with requirements specified in “Field Conditions” Article.

1.07 FIELD CONDITIONS

A. Environmental Limitations: Do not deliver or install cabinets until building is enclosed, wet work is complete, and HVAC system is operating and maintaining temperature between 60 and 90 deg F and relative humidity between 43 and 70 percent during the remainder of the construction period.

B. Established Dimensions: Where cabinets are indicated to fit to other construction, establish dimensions for areas where cabinets are to fit. Provide allowance for trimming at site, and coordinate construction to ensure that actual dimensions correspond to established dimensions.

1.08 COORDINATION

A. Coordinate sizes and locations of framing, blocking, furring, reinforcements, and other related units of Work specified in other Sections to ensure that cabinets can be supported and installed as indicated.

PART 2 - PRODUCTS

2.01 PLASTIC-LAMINATE-FACED ARCHITECTURAL CABINETS

A. Quality Standard: Unless otherwise indicated, comply with the “Architectural Woodwork Standards” for grades of architectural plastic-laminate cabinets indicated for construction, finishes, installation, and other requirements.

1. The Contract Documents contain selections chosen from options in the quality standard and additional requirements beyond those of the quality standard. Comply with those selections and requirements in addition to the quality standard.

B. Grade: Premium.

C. Type of Construction: As indicated.

D. Cabinet, Door, and Drawer Front Interface Style: As indicated.

E. High-Pressure Decorative Laminate: NEMA LD 3, grades as indicated or if not indicated, as required by woodwork quality standard.

1. Manufacturers: Subject to compliance with requirements, available manufacturers offering products that may be incorporated into the Work include, but are not limited to the following:

a. Abet Laminati Inc.
b. Formica Corporation.
c. Lamin-Art, Inc.
d. Pionite; a Panolam Industries International, Inc. brand.
e. Wilsonart International Holdings, Inc.

F. Laminate Cladding for Exposed Surfaces:

1. Horizontal Surfaces: Grade HGS.
2. Vertical Surfaces: Grade VGS.
3. Edges: Grade HGS.

G. Materials for Semiexposed Surfaces:

1. Surfaces Other Than Drawer Bodies: High-pressure decorative laminate, NEMA LD 3, Grade VGS.

a. Edges of Plastic-Laminate Shelves: PVC edge banding, 3.0 mm thick, matching laminate in color, pattern, and finish.
b. For semiexposed backs of panels with exposed plastic-laminate surfaces, provide surface of high-pressure decorative laminate, NEMA LD 3, Grade VGS.

2. Drawer Sides and Backs: Thermally fused laminate panels with PVC or polyester edge banding.
3. Drawer Bottoms: Thermally fused laminate panels.

H. Concealed Backs of Panels with Exposed Plastic-Laminate Surfaces: High-pressure decorative laminate, NEMA LD 3, Grade BKL.

I. Drawer Construction: Fabricate with exposed fronts fastened to subfront with mounting screws from interior of body.

1. Join subfronts, backs, and sides with glued dovetail joints.

J. Colors, Patterns, and Finishes: Provide materials and products that result in colors and textures of exposed laminate surfaces as indicated by laminate manufacturer's designations or if not indicated as selected by Architect from laminate manufacturer's full range of solid colors, matte finish.

2.02 WOOD MATERIALS

A. Wood Products: Provide materials that comply with requirements of referenced quality standard for each type of woodwork and quality grade specified unless otherwise indicated.

1. Wood Moisture Content: 8 to 13 percent.

B. Composite Wood and Agrifiber Products: Provide materials that comply with requirements of referenced quality standard for each type of woodwork and quality grade specified unless otherwise indicated.

1. Medium-Density Fiberboard: ANSI A208.2, Grade 130.
2. Particleboard: Not permitted.
3. Softwood Plywood: DOC PS 1.

2.03 CABINET HARDWARE AND ACCESSORIES

A. General: Provide cabinet hardware and accessory materials associated with architectural cabinets except for items specified in Division 08 Section "Door Hardware (Descriptive Specification)."

B. General: Provide cabinet hardware and accessory materials associated with architectural cabinets except for items specified in Division 08 Section "Door Hardware."

1. Manufacturers: Subject to compliance with requirements, available manufacturers offering products that may be incorporated into the Work include, but are not limited to the following:

a. Accuride International.
b. Blum, Julius & Co., Inc.
c. C.R. Laurence Co., Inc.
d. Grass America Inc.
e. Hafele.
f. Knape & Vogt Manufacturing Company.
g. Stanley Manufacturing Co.

C. Frameless Concealed Hinges (European Type): ANSI/BHMA A156.9, B01602, 135 degrees of opening, self-closing.

D. Wire Pulls: Back mounted, solid metal, 4 inches long, 5/16 inch in diameter.

E. Catches: Roller catches, BHMA A156.9, B03071.

F. Shelf Rests: BHMA A156.9, B04013; metal, two-pin type with shelf hold-down clip.

G. Drawer Slides: BHMA A156.9.

1. Grade 1 and Grade 2: Side mounted and extending under bottom edge of drawer; full-extension type; epoxy-coated steel with polymer rollers.
2. Grade 1HD-100 and Grade 1HD-200: Side mounted; full-overtravel-extension type; zinc-plated-steel ball-bearing slides.

3. For drawers not more than 6 inches high and not more than 24 inches wide, provide Grade 1.
4. For drawers more than 6 inches high or more than 24 inches wide, provide Grade 1HD-100.

H. Door Locks: BHMA A156.11, E07121.

1. Omit locks for cabinets located in Kitchen A107.

I. Drawer Locks: BHMA A156.11, E07041.

1. Omit locks for cabinets located in Kitchen A107.

J. Door and Drawer Silencers: BHMA A156.16, L03011.

K. Grommets for Cable Passage: 2-inch OD, molded-plastic grommets and matching plastic caps with slot for wire passage.

1. Manufacturer: Subject to compliance with requirements, provide grommets by Doug Mockett & Company or manufacturer of comparable products approved by Architect.
2. Color: As selected by Architect from manufacturer's full range of colors.

L. Exposed Hardware Finishes: For exposed hardware, provide finish that complies with BHMA A156.18 for BHMA finish number indicated.

1. Satin Chromium Plated: BHMA 626 for brass or bronze base; BHMA 652 for steel base.
2. Satin Stainless Steel: BHMA 630.

M. For concealed hardware, provide manufacturer's standard finish that complies with product class requirements in BHMA A156.9.

N. Provide removable angled panel under ADA sinks with concealed lift-off hardware.

2.04 MISCELLANEOUS MATERIALS

A. Furring, Blocking, Shims, and Hanging Strips: Softwood or hardwood lumber, kiln dried to less than 15 percent moisture content.

B. Anchors: Select material, type, size, and finish required for each substrate for secure anchorage. Provide metal expansion sleeves or expansion bolts for post-installed anchors. Use nonferrous-metal or hot-dip galvanized anchors and inserts at inside face of exterior walls and at floors.

2.05 FABRICATION

A. Fabricate cabinets and panels to dimensions, profiles, and details indicated.

B. Complete fabrication, including assembly and hardware application, to maximum extent possible before shipment to Project site. Disassemble components only as necessary for shipment and installation. Where necessary for fitting at site, provide ample allowance for scribing, trimming, and fitting.

1. Notify Architect seven days in advance of the dates and times woodwork fabrication will be complete.
2. Trial fit assemblies at fabrication shop that cannot be shipped completely assembled. Install dowels, screws, bolted connectors, and other fastening devices that can be removed after trial fitting. Verify that various parts fit as intended and check measurements of assemblies against field measurements before disassembling for shipment.

C. Shop-cut openings to maximum extent possible to receive hardware, appliances, electrical work, and similar items. Locate openings accurately and use templates or roughing-in diagrams to produce accurately sized and shaped openings. Sand edges of cutouts to remove splinters and burrs.

PART 3 - EXECUTION

3.01 PREPARATION

A. Before installation, condition cabinets to average prevailing humidity conditions in installation areas.

B. Before installing cabinets, examine shop-fabricated work for completion and complete work as required.

3.02 INSTALLATION

A. Grade: Install cabinets to comply with same grade as item to be installed.

B. Assemble cabinets and complete fabrication at Project site to the extent that it was not completed in the shop.

C. Install cabinets level, plumb, true, and straight. Shim as required with concealed shims. Install level and plumb to a tolerance of 1/8 inch in 96 inches.

D. Scribe and cut cabinets to fit adjoining work, refinish cut surfaces, and repair damaged finish at cuts.

E. Anchor cabinets to anchors or blocking built in or directly attached to substrates. Secure with countersunk, concealed fasteners and blind nailing. Use fine finishing nails or finishing screws for exposed fastening, countersunk and filled flush with woodwork.

1. Use filler matching finish of items being installed.

F. Cabinets: Install without distortion so doors and drawers fit openings properly and are accurately aligned. Adjust hardware to center doors and drawers in openings and to provide unencumbered operation. Complete installation of hardware and accessory items as indicated.

1. Install cabinets with no more than 1/8 inch in 96-inch sag, bow, or other variation from a straight line.
2. Fasten wall cabinets through back, near top and bottom, and at ends not more than 16 inches o.c. with toggle bolts through metal backing or metal framing behind wall finish.

3.03 ADJUSTING AND CLEANING

A. Repair damaged and defective cabinets, where possible, to eliminate functional and visual defects; where not possible to repair, replace woodwork. Adjust joinery for uniform appearance.

B. Clean, lubricate, and adjust hardware.

C. Clean cabinets on exposed and semiexposed surfaces.

END OF SECTION

SECTION 06 64 00
PLASTIC PANELING

PART 1 - GENERAL

1.01 SUMMARY

A. Section includes plastic sheet paneling.

1.02 ACTION SUBMITTALS

A. Product Data: For each type of product.

B. Samples: For plastic paneling, in manufacturer's standard sizes.

1.03 PROJECT CONDITIONS

A. Environmental Limitations: Do not deliver or install plastic paneling until spaces are enclosed and weathertight and temporary HVAC system is operating and maintaining ambient temperature and humidity conditions at occupancy levels during the remainder of the construction period.

PART 2 - PRODUCTS

2.01 MANUFACTURERS

A. Source Limitations: Obtain plastic paneling and trim accessories from single manufacturer.

2.02 PLASTIC SHEET PANELING

A. Glass-Fiber-Reinforced Plastic Paneling: Gelcoat-finished, glass-fiber-reinforced plastic panels complying with ASTM D 5319.

1. Manufacturers: Subject to compliance with requirements, available manufacturers offering products that may be incorporated into the Work include, but are not limited to the following:

   a. Crane Composites, Inc.
   b. Glasteel.
   c. Marlite.
   d. Newcourt, Inc.
   e. Nudo Products, Inc.
   f. Parkland Plastics, Inc.

2. Surface-Burning Characteristics: As follows when tested by a qualified testing agency according to ASTM E 84. Identify products with appropriate markings of applicable testing agency.

    a. Flame-Spread Index: 25 or less.
    b. Smoke-Developed Index: 450 or less.

3. Nominal Thickness: Not less than 0.075 inch.
4. Surface Finish: Smooth.
5. Color: White.

2.03 ACCESSORIES

A. Adhesive: As recommended by plastic paneling manufacturer.

B. Sealant: Mildew-resistant, single-component, neutral-curing silicone sealant recommended by plastic paneling manufacturer and complying with requirements in Division 07 Section “Joint Sealants.”

PART 3 - EXECUTION

3.01 EXAMINATION

A. Examine substrates and conditions, with Installer present, for compliance with requirements for installation tolerances and other conditions affecting performance of the Work.

B. Proceed with installation only after unsatisfactory conditions have been corrected.

3.02 PREPARATION

A. Clean substrates of substances that could impair adhesive bond, including oil, grease, dirt, and dust.

B. Condition panels by unpacking and placing in installation space before installation according to manufacturer's written recommendations.

C. Lay out paneling before installing. Locate panel joints to provide equal panels at ends of walls not less than half the width of full panels unless otherwise indicated.

    1. Mark plumb lines on substrate at panel joint locations for accurate installation.
    2. Locate panel joints to allow clearance at panel edges according to manufacturer's written instructions.

3.03 INSTALLATION

A. Install plastic paneling according to manufacturer's written instructions.

B. Install panels in a full spread of adhesive.

C. Maintain uniform space between adjacent panels and between panels and floors, ceilings, and fixtures. Fill space with sealant.

D. Remove excess sealant and smears as paneling is installed. Clean with solvent recommended by sealant manufacturer and then wipe with clean dry cloths until no residue remains.

END OF SECTION

SECTION 07 14 16
COLD FLUID-APPLIED WATERPROOFING

PART 1 - GENERAL

1.01 SUMMARY

1. Polyurethane waterproofing at elevator pit.

1.02 PREINSTALLATION MEETINGS

A. Preinstallation Conference: Conduct conference at Project site.

1. Review waterproofing requirements including, but not limited to, the following:

a. Surface preparation specified in other Sections.
b. Minimum curing period.
c. Forecasted weather conditions.
d. Special details and sheet flashings.
e. Repairs.
f. Field quality control.

1.03 ACTION SUBMITTALS

A. Product Data: For each type of product.

1. Include construction details, material descriptions, and tested physical and performance properties of waterproofing.
2. Include manufacturer's written instructions for evaluating, preparing, and treating substrate.

B. Shop Drawings:

1. Indicate locations and extent of waterproofing.
2. Include details for substrate joints and cracks, sheet flashings, penetrations, inside and outside corners, tie-ins with adjoining waterproofing, and other termination conditions.

C. Samples: For each exposed product and for each color and texture specified, including the following products:

1. Flashing sheet, 8 by 8 inches.
2. Membrane-reinforcing fabric, 8 by 8 inches.
3. Drainage panel, 4 by 4 inches.

1.04 INFORMATIONAL SUBMITTALS

A. Qualification Data: For Installer.

B. Field quality-control reports.

C. Sample Warranties: For special warranties.

1.05 QUALITY ASSURANCE

A. Installer Qualifications: An entity that employs installers and supervisors who are trained and approved by waterproofing manufacturer.

1.06 FIELD CONDITIONS

A. Environmental Limitations: Apply waterproofing within the range of ambient and substrate temperatures recommended in writing by waterproofing manufacturer.

1. Do not apply waterproofing to a damp or wet substrate, when relative humidity exceeds 85 percent, or when temperatures are less than 5 deg F above dew point.
2. Do not apply waterproofing in snow, rain, fog or mist, or when such weather conditions are imminent during application and curing period.

B. Maintain adequate ventilation during application and curing of waterproofing materials.

1.07 WARRANTY

A. Manufacturer's Special Warranty: Manufacturer agrees to repair or replace waterproofing that fails in materials or workmanship within specified warranty period.

1. Warranty Period: Five years from date of Substantial Completion.

PART 2 - PRODUCTS

2.01 SOURCE LIMITATIONS

A. Obtain waterproofing materials from single source and from single manufacturer.

2.02 SINGLE COMPONENT POLYURETHANE WATERPROOFING

A. Single-Component, Modified Polyurethane Waterproofing: ASTM C836/C836M.

1. BASF Construction Chemicals, LLC., Building Systems; Sonoshield HLM 5000.
2. Carlisle Coatings and Waterproofing Inc.; CCW-525.
3. Neoguard.; Neoguard 7401.

4. Polyguard Products, Inc.; Polyguard PG-250.
5. Tremco Incorporated; TREMproof 201/60.

2.03 AUXILIARY MATERIALS

A. General: Provide auxiliary materials recommended in writing by waterproofing manufacturer for intended use and compatible with one another and with waterproofing.

B. Primer: Manufacturer's standard primer, sealer, or surface conditioner; factory-formulated.

C. Sheet Flashing: 50-mil-minimum, nonstaining, uncured sheet neoprene.

1. Adhesive: Manufacturer's recommended contact adhesive.

D. Membrane-Reinforcing Fabric: Manufacturer's recommended fiberglass mesh or polyester fabric,.

E. Joint Reinforcing Strip: Manufacturer's recommended fiberglass mesh or polyester fabric.

F. Joint Sealant: Multicomponent polyurethane sealant, compatible with waterproofing; and as recommended by manufacturer for substrate and joint conditions.

1. Backer Rod: Closed-cell polyethylene foam.

2.04 PROTECTION COURSE

A. Protection Course, Core or Extruded-Polystyrene Board Insulation, Both Sides with Plastic Film: Fan folded, nominal thickness of 1/4 inch, with compressive strength of not less than 8 psi in accordance with ASTM C1621/C1621M and maximum water absorption by volume of 0.6 percent in accordance with ASTM C272/C272M.

1. Products: Subject to compliance with requirements, available products that may be incorporated into the Work include, but are not limited to, the following:

a. Owens Corning Insulating Systems LLC; Fanfold DWB.
b. Pactiv Corporation; GreenGuard PB4.
c. Urethane Polymers International, Inc; UPI-PB4.

PART 3 - EXECUTION

3.01 EXAMINATION

A. Examine substrates, areas, and conditions, with Installer present, for compliance with requirements and other conditions affecting performance of the Work.

1. Verify that concrete has cured and aged for minimum time period recommended in writing by waterproofing manufacturer.

2. Verify that substrate is visibly dry and within the moisture limits recommended in writing by manufacturer. Test for capillary moisture by plastic sheet method in accordance with ASTM D4263.

B. Proceed with installation only after unsatisfactory conditions have been corrected.

3.02 PREPARATION

A. Clean, prepare, and treat substrates in accordance with manufacturer's written instructions. Provide clean, dust-free, and dry substrates for waterproofing application.

B. Mask off adjoining surfaces not receiving waterproofing to prevent spillage and overspray affecting other construction.

C. Close off deck drains and other deck penetrations to prevent spillage and migration of waterproofing fluids.

D. Remove grease, oil, bitumen, form-release agents, paints, curing compounds, acid residues, and other penetrating contaminants or film-forming coatings from concrete.

E. Remove fins, ridges, and other projections, and fill honeycomb, aggregate pockets, holes, and other voids.

F. Prepare surfaces at terminations and penetrations through waterproofing and at expansion joints, drains, sleeves, and corners in accordance with waterproofing manufacturer's written instructions and to recommendations in ASTM C1471/C1471M.

G. Apply waterproofing in two separate applications, and embed a joint reinforcing strip in the first preparation coat when recommended by waterproofing manufacturer.

H. Prepare, treat, rout, and fill joints and cracks in substrate in accordance with waterproofing manufacturer's written instructions and to recommendations in ASTM C1471/C1471M. Before coating surfaces, remove dust and dirt from joints and cracks in accordance with ASTM D4258.

I. Install sheet flashing and bond to deck and wall substrates where required in accordance with waterproofing manufacturer's written instructions.

3.03 INSTALLATION OF WATERPROOFING

A. Apply waterproofing in accordance with manufacturer's written instructions and to recommendations in ASTM C1471/C1471M.

B. Unreinforced Waterproofing Applications: Mix materials and apply waterproofing by spray, roller, notched squeegee, trowel, or other application method suitable to slope of substrate.

1. Apply one or more coats of waterproofing to obtain a seamless membrane free of entrapped gases and pinholes, with a dry film thickness of 60 mils.
2. Apply waterproofing to prepared wall terminations and vertical surfaces.
3. Verify manufacturer's recommended wet film thickness of waterproofing every 100 sq. ft..

C. Install protection course with butted joints over waterproofing before starting subsequent construction operations.

1. For vertical applications, set protection course in nominally cured membrane, which will act as an adhesive. If membrane cures before application of protection course, use adhesive.

3.04 PROTECTION

A. Protect waterproofing from damage and wear during remainder of construction period.

B. Correct deficiencies in or remove waterproofing that does not comply with requirements; repair substrates, reapply waterproofing, and repair sheet flashings.

END OF SECTION

SECTION 07 21 00
THERMAL INSULATION

PART 1 - GENERAL

1.01 SUMMARY

A. Section includes:

1. Glass-fiber blanket.
2. Spray-applied cellulosic insulation.
3. Spray polyurethane foam insulation for voids.

B. Related Sections include:

1. Division 07 Section “Thermoplastic-Polyolefin (Tpo) Roofing” for insulation specified as part of roofing construction.
2. Division 09 Section “Gypsum Board” for sound attenuation blanket used as acoustic insulation.

1.02 ACTION SUBMITTALS

A. Product Data: For each type of product.

1.03 DELIVERY, STORAGE, AND HANDLING

A. Protect insulation materials from physical damage and from deterioration due to moisture, soiling, and other sources. Store inside and in a dry location. Comply with manufacturer's written instructions for handling, storing, and protecting during installation.

PART 2 - PRODUCTS

2.01 GLASS-FIBER BLANKET

A. Glass-Fiber Blanket, Unfaced: ASTM C 665, Type I; with maximum flame-spread and smoke-developed indexes of 25 and 50, respectively, per ASTM E 84; passing ASTM E 136 for combustion characteristics.

1. Manufacturers: Subject to compliance with requirements, available manufacturers offering products that may be incorporated into the Work include, but are not limited to, the following:

a. CertainTeed Corporation.
b. Johns Manville; a Berkshire Hathaway company.
c. Knauf Insulation.
d. Owens Corning.

2.02 SPRAY-APPLIED CELLULOSIC INSULATION

A. Self-Supported, Spray-Applied Cellulosic Insulation: ASTM C 1149, Type I (materials applied with liquid adhesive; suitable for either exposed or enclosed applications), chemically treated for flame-resistance, processing, and handling characteristics.

1. Basis of Design: Design is based on International Cellulose Corp. K-13. Subject to compliance with requirements, provide named product or comparable product approved by Architect.

2.03 ACCESSORIES

A. Insulation for Miscellaneous Voids:

1. Glass-Fiber Insulation: ASTM C 764, Type II, loose fill; with maximum flame-spread and smoke-developed indexes of 5, per ASTM E 84.
2. Spray Polyurethane Foam Insulation: ASTM C1029, Type II, closed cell, with maximum flame-spread and smoke-developed indexes of 75 and 450, respectively, per ASTM E84.

B. Adhesive for Bonding Insulation: Product compatible with insulation and air and water barrier materials, and with demonstrated capability to bond insulation securely to substrates without damaging insulation and substrates.

PART 3 - EXECUTION

3.01 PREPARATION

A. Clean substrates of substances that are harmful to insulation, including removing projections capable of puncturing insulation or vapor retarders, or that interfere with insulation attachment.

3.02 INSTALLATION, GENERAL

A. Comply with insulation manufacturer's written instructions applicable to products and applications.

B. Install insulation that is undamaged, dry, and unsoiled and that has not been left exposed to ice, rain, or snow at any time.

C. Extend insulation to envelop entire area to be insulated. Fit tightly around obstructions and fill voids with insulation. Remove projections that interfere with placement.

D. Provide sizes to fit applications and selected from manufacturer's standard thicknesses, widths, and lengths. Apply single layer of insulation units unless multiple layers are otherwise shown or required to make up total thickness or to achieve R-value.

3.03 INSTALLATION OF INSULATION IN FRAMED CONSTRUCTION

A. Blanket Insulation: Install in cavities formed by framing members according to the following requirements:

1. Use insulation widths and lengths that fill the cavities formed by framing members. If more than one length is required to fill the cavities, provide lengths that will produce a snug fit between ends.
2. Place insulation in cavities formed by framing members to produce a friction fit between edges of insulation and adjoining framing members.
3. Maintain 3-inch clearance of insulation around recessed lighting fixtures not rated for or protected from contact with insulation.
4. For metal-framed wall cavities where cavity heights exceed 96 inches, support unfaced blankets mechanically and support faced blankets by taping flanges of insulation to flanges of metal studs.

B. Miscellaneous Voids: Install insulation in miscellaneous voids and cavity spaces where required to prevent gaps in insulation using the following materials:

1. Glass-Fiber Insulation: Compact to approximately 40 percent of normal maximum volume equaling a density of approximately 2.5 lb/cu. ft.

3.04 SPRAY-APPLIED INSULATION

A. General: Install the following spray-applied insulations:

1. Cellulosic insulation.
2. Polyurethane foam insulation for voids.

B. Apply spray-applied insulation in thickness indicated according to manufacturer's written instructions. Do not apply insulation until installation of pipes, ducts, conduits, wiring, and electrical outlets is completed and electrical boxes and other items not indicated to receive insulation are masked.

3.05 PROTECTION

A. Protect installed insulation from damage due to harmful weather exposures, physical abuse, and other causes. Provide temporary coverings or enclosures where insulation is subject to abuse and cannot be concealed and protected by permanent construction immediately after installation.

END OF SECTION

SECTION 07 27 26
FLUID-APPLIED MEMBRANE AIR BARRIERS

PART 1 - GENERAL

1.01 SUMMARY

A. Section includes vapor-retarding, fluid-applied air barriers.

B. Related Sections include Division 06 Section “Sheathing” for wall sheathings and wall sheathing joint-and-penetration treatments.

1.02 DEFINITIONS

A. Air-Barrier Material: A primary element that provides a continuous barrier to the movement of air.

B. Air-Barrier Accessory: A transitional component of the air barrier that provides continuity.

C. Air-Barrier Assembly: The collection of air-barrier materials and accessories applied to an opaque wall, including joints and junctions to abutting construction, to control air movement through the wall.

1.03 PREINSTALLATION MEETINGS

A. Preinstallation Conference: Conduct conference at Project site.

1. Review air-barrier requirements and installation, special details, mockups, air-leakage and bond testing, air-barrier protection, and work scheduling that covers air barriers.

1.04 ACTION SUBMITTALS

A. Product Data: For each type of product.

1. Include manufacturer's written instructions for evaluating, preparing, and treating each substrate; technical data; dry film thickness; and tested physical and performance properties of products.

B. Shop Drawings: For air-barrier assemblies.

1. Show locations and extent of air-barrier materials, accessories, and assemblies specific to Project conditions.
2. Include details for substrate joints and cracks, counterflashing strips, penetrations, inside and outside corners, terminations, and tie-ins with adjoining construction.
3. Include details of interfaces with other materials that form part of air barrier.

1.05 INFORMATIONAL SUBMITTALS

A. Product Certificates: From air-barrier manufacturer, certifying compatibility of air barriers and accessory materials with Project materials that connect to or that come in contact with the barrier.

1.06 QUALITY ASSURANCE

A. Installer Qualifications: An entity that employs installers and supervisors who are trained and approved by manufacturer.

B. Mockups: Provide fluid-applied membrane air barrier products and accessories required to construct integrated exterior mockup specified in Division 01 Section “Mockups.”

1.07 DELIVERY, STORAGE, AND HANDLING

A. Remove and replace liquid materials that cannot be applied within their stated shelf life.

B. Protect stored materials from direct sunlight.

1.08 FIELD CONDITIONS

A. Environmental Limitations: Apply air barrier within the range of ambient and substrate temperatures recommended in writing by air-barrier manufacturer.

1. Protect substrates from environmental conditions that affect air-barrier performance.
2. Do not apply air barrier to a damp or wet substrate or during snow, rain, fog, or mist.

PART 2 - PRODUCTS

2.01 MATERIALS

A. Source Limitations: Obtain primary air-barrier materials and air-barrier accessories from single source from single manufacturer.

2.02 PERFORMANCE REQUIREMENTS

A. Air-Barrier Performance: Air-barrier assembly and seals with adjacent construction shall be capable of performing as a continuous air barrier and as a liquid-water drainage plane flashed to discharge to the exterior incidental condensation or water penetration. Air-barrier assemblies shall be capable of accommodating substrate movement and of sealing substrate expansion and control joints, construction material changes, penetrations, and transitions at perimeter conditions without deterioration and air leakage exceeding specified limits.

B. Air-Barrier Assembly Air Leakage: Maximum 0.04 cfm/sq. ft. of surface area at 1.57 lbf/sq. ft., when tested according to ASTM E 2357.

2.03 HIGH-BUILD AIR BARRIERS, VAPOR RETARDING

A. High-Build, Vapor-Retarding Air Barrier: Synthetic polymer membrane with an installed dry film thickness, according to manufacturer's written instructions, of 35 mils or thicker over smooth, void-free substrates.

1. Products: Subject to compliance with requirements, available products that may be incorporated into the Work include, but are not limited to the following:

a. Carlisle Coatings & Waterproofing Inc; Fire Resist Barritech NP.
b. GCP Applied Technologies; Perm-A-Barrier Liquid.
c. Henry Company; Air-Bloc 32MR.
d. Hohmann & Barnard, Inc; Enviro-Barrier.
e. Soprema, Inc.
f. W. R. Meadows, Inc; Air-Shield LSR.

2. Physical and Performance Properties:

a. Air Permeance: Maximum 0.004 cfm/sq. ft. of surface area at 1.57-lbf/sq. ft. pressure difference; ASTM E 2178.
b. Vapor Permeance: Maximum 0.1 perm; ASTM E 96/E 96M, Desiccant Method.
c. Ultimate Elongation: Minimum 500 percent; ASTM D 412, Die C.
d. Adhesion to Substrate: Minimum 16 lbf/sq. in. when tested according to ASTM D 4541.
e. UV Resistance: Can be exposed to sunlight for 90 days according to manufacturer's written instructions.

2.04 ACCESSORY MATERIALS

A. Requirement: Provide primers, transition strips, termination strips, joint reinforcing fabric and strips, joint sealants, counterflashing strips, flashing sheets and metal termination bars, termination mastic, substrate patching materials, adhesives, tapes, foam sealants, lap sealants, and other accessory materials that are recommended in writing by air-barrier manufacturer to produce a complete air-barrier assembly and that are compatible with primary air-barrier material and adjacent construction to which they may seal.

B. Primer: Liquid primer recommended for substrate by air-barrier material manufacturer.

PART 3 - EXECUTION

3.01 EXAMINATION

A. Examine substrates, areas, and conditions, with Installer present, for compliance with requirements and other conditions affecting performance of the Work.

1. Verify that substrates are sound and free of oil, grease, dirt, excess mortar, or other contaminants.
2. Verify that substrates have cured and aged for minimum time recommended in writing by air-barrier manufacturer.

3. Verify that substrates are visibly dry and free of moisture.
4. Verify that masonry joints are flush and completely filled with mortar.

B. Proceed with installation only after unsatisfactory conditions have been corrected.

3.02 SURFACE PREPARATION

A. Clean, prepare, treat, fill, and seal substrate and joints and cracks in substrate according to manufacturer's written instructions and details. Provide clean, dust-free, and dry substrate for air-barrier application.

B. Mask off adjoining surfaces not covered by air barrier to prevent spillage and overspray affecting other construction.

C. Remove grease, oil, bitumen, form-release agents, paints, curing compounds, and other penetrating contaminants or film-forming coatings from concrete.

D. Remove fins, ridges, mortar, and other projections and fill honeycomb, aggregate pockets, holes, and other voids in concrete with substrate-patching material.

E. Remove excess mortar from masonry ties, shelf angles, and other obstructions.

F. At changes in substrate plane, apply sealant or termination mastic beads at sharp corners and edges to form a smooth transition from one plane to another.

G. Cover gaps in substrate plane and form a smooth transition from one substrate plane to another with stainless-steel sheet mechanically fastened to structural framing to provide continuous support for air barrier.

H. Bridge isolation joints discontinuous wall-to-wall, deck-to-wall, and deck-to-deck joints with air-barrier accessory material that accommodates joint movement according to manufacturer's written instructions and details.

3.03 ACCESSORIES INSTALLATION

A. Install accessory materials according to air-barrier manufacturer's written instructions and details to form a seal with adjacent construction and ensure continuity of air and water barrier.

1. Coordinate the installation of air barrier with installation of roofing membrane and base flashing to ensure continuity of air barrier with roofing membrane.
2. Install transition strip on roofing membrane or base flashing so that a minimum of 3 inches of coverage is achieved over each substrate.
3. Unless manufacturer recommends in writing against priming, apply primer to substrates at required rate and allow it to dry.
4. Apply primer to substrates at required rate and allow it to dry. Limit priming to areas that will be covered by air-barrier material on same day. Reprime areas exposed for more than 24 hours.

B. Connect and seal exterior wall air-barrier material continuously to roofing-membrane air barrier, concrete below-grade structures, floor-to-floor construction, exterior glazing and window systems, glazed curtain-wall systems, storefront systems, exterior louvers, exterior door framing, and other construction used in exterior wall openings, using accessory materials.

C. At end of each working day, seal top edge of strips and transition strips to substrate with termination mastic.

D. Apply joint sealants forming part of air-barrier assembly within manufacturer's recommended application temperature ranges. Consult manufacturer when sealant cannot be applied within these temperature ranges.

E. Wall Openings: Prime concealed, perimeter frame surfaces of windows, curtain walls, storefronts, and doors. Apply transition strip so that a minimum of 3 inches of coverage is achieved over each substrate. Maintain 3 inches of full contact over firm bearing to perimeter frames, with not less than 1 inch of full contact.

1. Transition Strip: Roll firmly to enhance adhesion.

F. Fill gaps in perimeter frame surfaces of windows, curtain walls, storefronts, and doors, and miscellaneous penetrations of air-barrier material with foam sealant.

G. Seal strips and transition strips around masonry reinforcing or ties and penetrations with termination mastic.

H. Seal top of through-wall flashings to air barrier with an additional 6-inch-wide, transition strip.

I. Seal exposed edges of strips at seams, cuts, penetrations, and terminations not concealed by metal counterflashings or ending in reglets with termination mastic.

J. Repair punctures, voids, and deficient lapped seams in strips and transition strips. Slit and flatten fishmouths and blisters. Patch with transition strips extending 6 inches beyond repaired areas in strip direction.

3.04 PRIMARY AIR-BARRIER MATERIAL INSTALLATION

A. Apply air-barrier material to form a seal with strips and transition strips and to achieve a continuous air barrier according to air-barrier manufacturer's written instructions and details. Apply air-barrier material within manufacturer's recommended application temperature ranges.

1. Unless manufacturer recommends in writing against priming, apply primer to substrates at required rate and allow it to dry.
2. Limit priming to areas that will be covered by air-barrier material on same day. Reprime areas exposed for more than 24 hours.
3. Where multiple prime coats are needed to achieve required bond, allow adequate drying time between coats.

B. High-Build Air Barriers: Apply continuous unbroken air-barrier material to substrates according to the following thickness. Apply air-barrier material in full contact around protrusions such as masonry ties.

1. Vapor-Retarding, High-Build Air Barrier: Total dry film thickness as recommended in writing by manufacturer to comply with performance requirements, but not less than 35 mils, applied in one or more equal coats.

C. Do not cover air barrier until it has been tested and inspected by testing agency.

D. Correct deficiencies in or remove air barrier that does not comply with requirements; repair substrates and reapply air-barrier components.

3.05 FIELD QUALITY CONTROL

A. Testing Agency: Owner will engage a qualified testing agency to perform tests and inspections.

B. Inspections: Air-barrier materials, accessories, and installation are subject to inspection for compliance with requirements. Inspections may include the following:

1. Continuity of air-barrier system has been achieved throughout the building envelope with no gaps or holes.
2. Air-barrier dry film thickness.
3. Continuous structural support of air-barrier system has been provided.
4. Masonry and concrete surfaces are smooth, clean, and free of cavities, protrusions, and mortar droppings.
5. Site conditions for application temperature and dryness of substrates have been maintained.
6. Maximum exposure time of materials to UV deterioration has not been exceeded.
7. Surfaces have been primed, if applicable.
8. Laps in strips and transition strips have complied with minimum requirements and have been shingled in the correct direction (or mastic has been applied on exposed edges), with no fishmouths.
9. Termination mastic has been applied on cut edges.
10. Strips and transition strips have been firmly adhered to substrate.
11. Compatible materials have been used.
12. Transitions at changes in direction and structural support at gaps have been provided.
13. Connections between assemblies (air-barrier and sealants) have complied with requirements for cleanliness, surface preparation and priming, structural support, integrity, and continuity of seal.
14. All penetrations have been sealed.

C. Tests: As determined by testing agency from among the following tests:

1. Air-Leakage-Volume Testing: Air-barrier assemblies will be tested for air-leakage rate according to ASTM E 783 or ASTM E 2357.
2. Adhesion Testing: Air-barrier assemblies will be tested for required adhesion to substrate according to ASTM D 4541 for each 600 sq. ft. of installed air barrier or part thereof.

D. Air barriers will be considered defective if they do not pass tests and inspections.

1. Apply additional air-barrier material, according to manufacturer's written instructions, where inspection results indicate insufficient thickness.
2. Remove and replace deficient air-barrier components for retesting as specified above.

E. Repair damage to air barriers caused by testing; follow manufacturer's written instructions.

F. Prepare test and inspection reports.

3.06 CLEANING AND PROTECTION

A. Protect air-barrier system from damage during application and remainder of construction period, according to manufacturer's written instructions.

1. Protect air barrier from exposure to UV light and harmful weather exposure as recommended in writing by manufacturer. If exposed to these conditions for longer than recommended, remove and replace air barrier or install additional, full-thickness, air-barrier application after repairing and preparing the overexposed materials according to air-barrier manufacturer's written instructions.
2. Protect air barrier from contact with incompatible materials and sealants not approved by air-barrier manufacturer.

B. Clean spills, stains, and soiling from construction that would be exposed in the completed work using cleaning agents and procedures recommended in writing by manufacturer of affected construction.

C. Remove masking materials after installation.

END OF SECTION

SECTION 07 42 13.23
METAL COMPOSITE MATERIAL WALL PANELS

PART 1 - GENERAL

1.01 SUMMARY

A. Section includes:

1. Metal composite material wall panels.
2. Metal composite material perforated wall panels.

1.02 PREINSTALLATION MEETINGS

A. Preinstallation Conference: Conduct conference at Project site.

1. Meet with Owner, Architect, Owner's insurer if applicable, metal composite material panel Installer, metal composite material panel manufacturer's representative, structural-support Installer, and installers whose work interfaces with or affects metal composite material panels, including installers of doors, windows, and louvers.
2. Review and finalize construction schedule and verify availability of materials, Installer's personnel, equipment, and facilities needed to make progress and avoid delays.
3. Review methods and procedures related to metal composite material panel installation, including manufacturer's written instructions.
4. Examine support conditions for compliance with requirements, including alignment between and attachment to structural members.
5. Review flashings, special siding details, wall penetrations, openings, and condition of other construction that affect metal composite material panels.
6. Review governing regulations and requirements for insurance, certificates, and tests and inspections if applicable.
7. Review temporary protection requirements for metal composite material panel assembly during and after installation.
8. Review procedures for repair of panels damaged after installation.
9. Document proceedings, including corrective measures and actions required, and furnish copy of record to each participant.

1.03 ACTION SUBMITTALS

A. Product Data: For each type of product.

1. Include construction details, material descriptions, dimensions of individual components and profiles, and finishes for each type of panel and accessory.

B. Shop Drawings:

1. Include fabrication and installation layouts of metal composite material panels; details of edge conditions, joints, panel profiles, corners, anchorages, attachment assembly, trim, flashings, closures, and accessories; and special details.

2. Accessories: Include details of the flashing, trim and anchorage, at a scale of not less than 1-1/2 inches per 12 inches.

C. Samples: For each type of exposed finish required, prepared on Samples of size indicated below.

1. Metal Composite Material Panels: 12 inches long by actual panel width. Include fasteners, closures, and other metal composite material panel accessories.

1.04 INFORMATIONAL SUBMITTALS

A. Sample Warranties: For special warranties.

1.05 CLOSEOUT SUBMITTALS

A. Maintenance Data: For metal composite material panels to include in maintenance manuals.

1.06 QUALITY ASSURANCE

A. Installer Qualifications: An entity that employs installers and supervisors who are trained and approved by manufacturer.

B. Mockups: Provide metal composite material wall panels, miscellaneous materials, and accessories required to construct integrated exterior mockup specified in Division 01 Section "Mockups."

1.07 DELIVERY, STORAGE, AND HANDLING

A. Deliver components, metal composite material panels, and other manufactured items so as not to be damaged or deformed. Package metal composite material panels for protection during transportation and handling.

B. Unload, store, and erect metal composite material panels in a manner to prevent bending, warping, twisting, and surface damage.

C. Stack metal composite material panels horizontally on platforms or pallets, covered with suitable weathertight and ventilated covering. Store metal composite material panels to ensure dryness, with positive slope for drainage of water. Do not store metal composite material panels in contact with other materials that might cause staining, denting, or other surface damage.

D. Retain strippable protective covering on metal composite material panels during installation.

1.08 FIELD CONDITIONS

A. Weather Limitations: Proceed with installation only when existing and forecasted weather conditions permit assembly of metal composite material panels to be performed according to manufacturers' written instructions and warranty requirements.

1.09 COORDINATION

A. Coordinate metal composite material panel installation with rain drainage work, flashing, trim, construction of soffits, and other adjoining work to provide a leakproof, secure, and noncorrosive installation.

1.10 WARRANTY

A. Special Warranty: Manufacturer's standard form in which manufacturer agrees to repair or replace components of metal composite material panel systems that fail in materials or workmanship within specified warranty period.

1. Failures include, but are not limited to, the following:

a. Structural failures including rupturing, cracking, or puncturing.
b. Deterioration of metals and other materials beyond normal weathering.

2. Warranty Period: Two years from date of Substantial Completion.

B. Special Warranty on Panel Finishes: Manufacturer's standard form in which manufacturer agrees to repair finish or replace metal composite material panels that show evidence of deterioration of factory-applied finishes within specified warranty period.

1. Exposed Panel Finish: Deterioration includes, but is not limited to, the following:

a. Color fading more than 5 Hunter units when tested according to ASTM D 2244.
b. Chalking in excess of a No. 8 rating when tested according to ASTM D 4214.
c. Cracking, checking, peeling, or failure of paint to adhere to bare metal.

2. Finish Warranty Period: 20 years from date of Substantial Completion.

PART 2 - PRODUCTS

2.01 PERFORMANCE REQUIREMENTS

A. Structural Performance: Provide metal composite material panel systems capable of withstanding the effects of the following loads, based on testing according to ASTM E 330:

1. Wind Loads: Determine positive and negative wind pressures according to ASCE/SEI 7 using wind speed criteria indicated on Structural Drawings.
2. Deflection Limits: For wind loads, no greater than 1/180 of the span.

B. Air Infiltration: Air leakage of not more than 0.06 cfm/sq. ft. when tested according to ASTM E 283 at the following test-pressure difference:

1. Test-Pressure Difference: 1.57 lbf/sq. ft.

C. Water Penetration under Static Pressure: No water penetration when tested according to ASTM E 331 at the following test-pressure difference:

1. Test-Pressure Difference: 2.86 lbf/sq. ft.

D. Thermal Movements: Allow for thermal movements from ambient and surface temperature changes by preventing buckling, opening of joints, overstressing of components, failure of joint sealants, failure of connections, and other detrimental effects. Base calculations on surface temperatures of materials due to both solar heat gain and nighttime-sky heat loss.

1. Temperature Change (Range): 120 deg F, ambient; 180 deg F, material surfaces.

2.02 METAL COMPOSITE MATERIAL WALL PANELS

A. Metal Composite Material Wall Panel Systems: Provide factory-formed and -assembled, metal composite material wall panels fabricated from two metal facings that are bonded to a solid, extruded thermoplastic core; formed into profile for installation method indicated. Include attachment assembly components, panel stiffeners, and accessories required for weathertight system.

1. Basis-of-Design: Design is based products by ALUCOBOND; 3A Composites USA, Inc. Subject to compliance with requirements, available manufacturers offering products that may be incorporated into the Work include, but are not limited to, the following:

    a. Alcoa Architectural Products (USA).
    b. ALPOLIC Materials; Mitsubishi Plastics Composites America.
    c. Alucoil North America.

B. Aluminum-Faced Composite Wall Panels: Formed with 0.020-inch-thick, coil-coated aluminum sheet facings.

1. Panel Thickness: As required for specified performance, but not less than 0.118 inch.
2. Core: Standard.

C. Perforated Wall Panels: Unless otherwise indicated, provide slotted, 50% maximum percent open perforated panels in locations indicated on Drawings.

D. Exterior Finish: Polyvinyledene Fluoride (PVF2) Resin-base finish (Kynar 500 or Hylar 5000) containing 70 percent minimum PVF2 in resin portion of formula. Thermo-cured two coat system consisting of corrosion inhibiting epoxy primer and top coat factory applied over properly pre-treated metal.

1. Color: Multiple colors as indicated on Drawings.

E. Attachment Assembly Components: Formed from extruded aluminum.

F. Attachment Assembly: Manufacturer's standard.

2.03 MISCELLANEOUS MATERIALS

A. Miscellaneous Metal Subframing and Furring: ASTM C 645, cold-formed, metallic-coated steel sheet ASTM A 653/A 653M, G90 coating designation or ASTM A 792/A 792M, Class AZ50 aluminum-zinc-alloy coating designation unless otherwise indicated. Provide manufacturer's standard sections as required for support and alignment of metal composite material panel system.

B. Panel Accessories: Provide components required for a complete, weathertight panel system including trim, copings, fasciae, mullions, sills, corner units, clips, flashings, sealants, gaskets, fillers, closure strips, and similar items. Match material and finish of metal composite material panels unless otherwise indicated.

C. Flashing and Trim: Provide flashing and trim formed from same material as metal composite material panels as required to seal against weather and to provide finished appearance. Locations include, but are not limited to, bases, drips, sills, jambs, corners, endwalls, framed openings, rakes, fasciae, parapet caps, soffits, reveals, and fillers. Finish flashing and trim with same finish system as adjacent metal composite material panels.

D. Panel Fasteners: Self-tapping screws designed to withstand design loads. Provide exposed fasteners with heads matching color of metal composite material panels by means of plastic caps or factory-applied coating. Provide EPDM or PVC sealing washers for exposed fasteners.

E. Panel Sealants: ASTM C 920; elastomeric polyurethane or silicone sealant; of type, grade, class, and use classifications required to seal joints in metal composite material panels and remain weathertight; and as recommended in writing by metal composite material panel manufacturer.

2.04 FABRICATION

A. General: Fabricate and finish metal composite material panels and accessories at the factory, by manufacturer's standard procedures and processes, as necessary to fulfill indicated performance requirements demonstrated by laboratory testing. Comply with indicated profiles and with dimensional and structural requirements.

B. Fabricate metal composite material panel joints with factory-installed captive gaskets or separator strips that provide a weathertight seal and prevent metal-to-metal contact, and that minimize noise from movements.

C. Sheet Metal Flashing and Trim: Fabricate flashing and trim to comply with manufacturer's recommendations and recommendations in SMACNA's “Architectural Sheet Metal Manual” that apply to design, dimensions, metal, and other characteristics of item indicated.

1. Form exposed sheet metal accessories that are without excessive oil canning, buckling, and tool marks and that are true to line and levels indicated, with exposed edges folded back to form hems.
2. Seams for Aluminum: Fabricate nonmoving seams with flat-lock seams. Form seams and seal with epoxy seam sealer. Rivet joints for additional strength.
3. Seams for Other Than Aluminum: Fabricate nonmoving seams in accessories with flat-lock seams. Tin edges to be seamed, form seams, and solder.
4. Sealed Joints: Form non-expansion, but movable, joints in metal to accommodate sealant and to comply with SMACNA standards.
5. Conceal fasteners and expansion provisions where possible. Exposed fasteners are not allowed on faces of accessories exposed to view.
6. Fabricate cleats and attachment devices from same material as accessory being anchored or from compatible, noncorrosive metal recommended in writing by metal panel manufacturer.

a. Size: As recommended by SMACNA's “Architectural Sheet Metal Manual” or metal wall panel manufacturer for application but not less than thickness of metal being secured.

2.05 FINISHES

A. Protect mechanical and painted finishes on exposed surfaces from damage by applying a strippable, temporary protective covering before shipping.

B. Appearance of Finished Work: Variations in appearance of abutting or adjacent pieces are acceptable if they are within one-half of the range of approved Samples. Noticeable variations in same piece are not acceptable. Variations in appearance of other components are acceptable if they are within the range of approved Samples and are assembled or installed to minimize contrast.

C. Aluminum Panels and Accessories: Two-coat fluoropolymer complying with AAMA 2605 and containing not less than 70 percent PVDF resin by weight in color coat. Prepare, pretreat, and apply coating to exposed metal surfaces to comply with coating and resin manufacturers' written instructions.

PART 3 - EXECUTION

3.01 EXAMINATION

A. Examine substrates, areas, and conditions, with Installer present, for compliance with requirements for installation tolerances, metal composite material panel supports, and other conditions affecting performance of the Work.

1. Examine wall framing to verify that girts, angles, channels, studs, and other structural panel support members and anchorage have been installed within alignment tolerances required by metal composite material wall panel manufacturer.
2. Examine wall sheathing to verify that sheathing joints are supported by framing or blocking and that installation is within flatness tolerances required by metal composite material wall panel manufacturer.

a. Verify that air- or water-resistive barriers have been installed over sheathing or backing substrate to prevent air infiltration or water penetration.

B. Examine roughing-in for components and assemblies penetrating metal composite material panels to verify actual locations of penetrations relative to seam locations of metal composite material panels before installation.

C. Proceed with installation only after unsatisfactory conditions have been corrected.

3.02 PREPARATION

A. Miscellaneous Supports: Install subframing, furring, and other miscellaneous panel support members and anchorages according to ASTM C 754 and metal composite material panel manufacturer's written recommendations.

3.03 METAL COMPOSITE MATERIAL PANEL INSTALLATION

A. General: Install metal composite material panels according to manufacturer's written instructions in orientation, sizes, and locations indicated on Drawings. Install panels perpendicular to supports unless otherwise indicated. Anchor metal composite material panels and other components of the Work securely in place, with provisions for thermal and structural movement.

1. Shim or otherwise plumb substrates receiving metal composite material panels.
2. Flash and seal metal composite material panels at perimeter of all openings. Fasten with self-tapping screws. Do not begin installation until air- or water-resistive barriers and flashings that will be concealed by metal composite material panels are installed.
3. Install screw fasteners in predrilled holes.
4. Locate and space fastenings in uniform vertical and horizontal alignment.
5. Install flashing and trim as metal composite material panel work proceeds.
6. Locate panel splices over, but not attached to, structural supports. Stagger panel splices and end laps to avoid a four-panel lap splice condition.
7. Align bottoms of metal composite material panels and fasten with blind rivets, bolts, or self-tapping screws. Fasten flashings and trim around openings and similar elements with self-tapping screws.
8. Provide weathertight escutcheons for pipe- and conduit-penetrating panels.

B. Fasteners for Aluminum Panels: Use aluminum or stainless-steel fasteners for surfaces exposed to the exterior; use aluminum or galvanized-steel fasteners for surfaces exposed to the interior.

C. Metal Protection: Where dissimilar metals contact each other or corrosive substrates, protect against galvanic action as recommended in writing by metal composite material panel manufacturer.

D. Attachment Assembly, General: Install attachment assembly required to support metal composite material wall panels and to provide a complete weathertight wall system, including subgirts, perimeter extrusions, tracks, drainage channels, panel clips, and anchor channels.

1. Include attachment to supports, panel-to-panel joinery, panel-to-dissimilar-material joinery, and panel-system joint seals.

E. Installation: Attach metal composite material wall panels to supports at locations, spacings, and with fasteners recommended by manufacturer to achieve performance requirements specified.

1. Wet Seal Systems: Seal horizontal and vertical joints between adjacent metal composite material wall panels with sealant backing and sealant. Install sealant backing and sealant according to requirements specified in Section 079200 “Joint Sealants.”

F. Clip Installation: Attach panel clips to supports at locations, spacings, and with fasteners recommended by manufacturer. Attach routed-and-returned flanges of wall panels to panel clips with manufacturer's standard fasteners.

1. Seal horizontal and vertical joints between adjacent panels with sealant backing and sealant. Install sealant backing and sealant according to requirements specified in Division 07 Section “Joint Sealants.”
2. Seal horizontal and vertical joints between adjacent metal composite material wall panels with manufacturer's standard gaskets.

G. Accessory Installation: Install accessories with positive anchorage to building and weathertight mounting, and provide for thermal expansion. Coordinate installation with flashings and other components.

1. Install components required for a complete metal composite material panel assembly including trim, copings, corners, seam covers, flashings, sealants, gaskets, fillers, closure strips, and similar items. Provide types indicated by metal composite material panel manufacturer; or, if not indicated, provide types recommended in writing by metal composite material panel manufacturer.

H. Flashing and Trim: Comply with performance requirements, manufacturer's written installation instructions, and SMACNA's "Architectural Sheet Metal Manual." Provide concealed fasteners where possible, and set units true to line and level as indicated. Install work with laps, joints, and seams that are permanently watertight.

1. Install exposed flashing and trim that is without buckling and tool marks and that is true to line and levels indicated, with exposed edges folded back to form hems. Install sheet metal flashing and trim to fit substrates and to result in waterproof performance.
2. Expansion Provisions: Provide for thermal expansion of exposed flashing and trim. Space movement joints at a maximum of 10 feet with no joints allowed within 24 inches of corner or intersection. Where lapped expansion provisions cannot be used or would not be sufficiently waterproof, form expansion joints of intermeshing hooked flanges, not less than 1 inch deep, filled with mastic sealant (concealed within joints).

3.04 ERECTION TOLERANCES

A. Installation Tolerances: Shim and align metal composite material wall panel units within installed tolerance of 1/4 inch in 20 feet, non-accumulative, on level, plumb, and location lines as indicated, and within 1/8-inch offset of adjoining faces and of alignment of matching profiles.

3.05 FIELD QUALITY CONTROL

A. Testing Agency: Owner will engage a qualified independent testing agency to perform field tests and inspections.

B. Water-Spray Test: After installation, test area of assembly as directed by Architect for water penetration according to AAMA 501.2.

C. Manufacturer's Field Service: Engage a factory-authorized service representative to test and inspect completed metal composite material wall panel installation, including accessories.

D. Metal composite material wall panels will be considered defective if they do not pass test and inspections.

E. Additional tests and inspections, at Contractor's expense, are performed to determine compliance of replaced or additional work with specified requirements.

3.06 CLEANING AND PROTECTION

A. Remove temporary protective coverings and strippable films, if any, as metal composite material panels are installed, unless otherwise indicated in manufacturer's written installation instructions. On completion of metal composite material panel installation, clean finished surfaces as recommended by metal composite material panel manufacturer. Maintain in a clean condition during construction.

B. After metal composite material panel installation, clear weep holes and drainage channels of obstructions, dirt, and sealant.

C. Replace metal composite material panels that have been damaged or have deteriorated beyond successful repair by finish touchup or similar minor repair procedures.

END OF SECTION

SECTION 07 54 23
THERMOPLASTIC-POLYOLEFIN (TPO) ROOFING

PART 1 - GENERAL

1.01 SUMMARY

A. Section includes:

1. Fully adhered, thermoplastic polyolefin (TPO) roofing system in multiple colors.
2. Roof insulation.
3. Cover board.
4. Walkways.

1.02 DEFINITIONS

A. Roofing Terminology: Definitions in ASTM D 1079 and glossary in NRCA's “The NRCA Roofing Manual: Membrane Roof Systems” apply to work of this Section.

1.03 PREINSTALLATION MEETINGS

A. Preinstallation Roofing Conference: Conduct conference at Project site.

1. Meet with Owner, Architect, Owner's insurer if applicable, testing and inspecting agency representative, acoustical roof deck manufacturer’s representative, roofing Installer, roofing system manufacturer's technical personnel, deck Installer, air barrier Installer, and installers whose work interfaces with or affects roofing, including installers of roof accessories and roof-mounted equipment.
2. Review methods and procedures related to roofing installation, including roof insulation fastening patterns required and manufacturer's written instructions.
3. Review and finalize construction schedule, and verify availability of materials, Installer's personnel, equipment, and facilities needed to make progress and avoid delays.
4. Examine deck substrate conditions and finishes for compliance with requirements, including flatness and fastening.
5. Review structural loading limitations of roof deck during and after roofing.
6. Review base flashings, special roofing details, roof drainage, roof penetrations, equipment curbs, and condition of other construction that affects roofing system.
7. Review governing regulations and requirements for insurance and certificates if applicable.
8. Review temporary protection requirements for roofing system during and after installation.
9. Review roof observation and repair procedures after roofing installation.

1.04 ACTION SUBMITTALS

A. Product Data: For each type of product.

B. Shop Drawings: Include roof plans, sections, details, and attachments to other work.

1. Layout and thickness of insulation.
2. Base flashings and membrane terminations.
3. Flashing details at penetrations.
4. Tapered insulation layout, thickness, and slopes.
5. Roof plan showing orientation of steel roof deck and orientation of roof membrane, fastening spacings, and patterns for mechanically fastened roofing system.
6. Insulation fastening patterns for corner, perimeter, and field-of-roof locations.

C. Samples for Verification: For the following products:

1. Roof membrane and flashing, of color required.
2. Walkway pads or rolls, of color required.

D. Wind Uplift Resistance Submittal: For roofing system, indicating compliance with wind uplift performance requirements.

1.05 INFORMATIONAL SUBMITTALS

A. Qualification Data: For Installer and manufacturer.

B. Manufacturer Certificates:

1. Performance Requirement Certificate: Signed by roof membrane manufacturer, certifying that roofing system complies with requirements specified in “Performance Requirements” Article.

   a. Submit evidence of compliance with performance requirements.

2. Special Warranty Certificate: Signed by roof membrane manufacturer, certifying that all materials supplied under this Section are acceptable for special warranty.

C. Sample Warranties: For manufacturer's special warranties.

1.06 CLOSEOUT SUBMITTALS

A. Maintenance Data: For roofing system to include in maintenance manuals.

1.07 QUALITY ASSURANCE

A. Manufacturer Qualifications: A qualified manufacturer that is UL listed for roofing system identical to that used for this Project.

B. Installer Qualifications: A qualified firm that is approved, authorized, or licensed by roofing system manufacturer to install manufacturer's product and that is eligible to receive manufacturer's special warranty.

1.08 DELIVERY, STORAGE, AND HANDLING

A. Deliver roofing materials to Project site in original containers with seals unbroken and labeled with manufacturer's name, product brand name and type, date of manufacture, approval or listing agency markings, and directions for storing and mixing with other components.

B. Store liquid materials in their original undamaged containers in a clean, dry, protected location and within the temperature range required by roofing system manufacturer. Protect stored liquid material from direct sunlight.

1. Discard and legally dispose of liquid material that cannot be applied within its stated shelf life.

C. Protect roof insulation materials from physical damage and from deterioration by sunlight, moisture, soiling, and other sources. Store in a dry location. Comply with insulation manufacturer's written instructions for handling, storing, and protecting during installation.

D. Handle and store roofing materials, and place equipment in a manner to avoid permanent deflection of deck.

1.09 FIELD CONDITIONS

A. Weather Limitations: Proceed with installation only when existing and forecasted weather conditions permit roofing system to be installed according to manufacturer's written instructions and warranty requirements.

1.10 WARRANTY

A. Special Warranty: Manufacturer agrees to repair or replace components of roofing system that fail in materials or workmanship within specified warranty period.

1. Special warranty includes roof membrane, base flashings, roof insulation, fasteners, cover boards, and other components of roofing system.
2. Warranty Period: 20 years from date of Substantial Completion with “No Dollar Limit.”

B. Special Project Warranty: Submit roofing Installer's warranty, on warranty form approved by Owner, signed by Installer, covering the Work of this Section, including all components of roofing system such as roof membrane, base flashing, roof insulation, fasteners, cover boards, and walkway products, for the following warranty period:

1. Warranty Period: Two years from date of Substantial Completion.

PART 2 - PRODUCTS

2.01 PERFORMANCE REQUIREMENTS

A. General Performance: Installed roofing and base flashings shall withstand specified uplift pressures, thermally induced movement, and exposure to weather without failure due to defective manufacture, fabrication, installation, or other defects in construction. Roof system and flashings shall remain watertight.

1. Accelerated Weathering: Roof membrane shall withstand 2000 hours of exposure when tested according to ASTM G 152, ASTM G 154, or ASTM G 155.
2. Impact Resistance: Roof membrane shall resist impact damage when tested according to ASTM D 3746, ASTM D 4272/D 4272M, or the “Resistance to Foot Traffic Test” in FM Approvals 4470.

B. Material Compatibility: Roofing materials shall be compatible with one another and adjacent materials under conditions of service and application required, as demonstrated by roof membrane manufacturer based on testing and field experience.

C. Roofing System Design:

1. Provide roofing system tested according to FM Approvals 4474, UL 580, or UL 1897by a qualified testing agency to resist the uplift pressures.
2. Determine uplift pressures according to ASCE/SEI 7 using wind speed criteria indicated on Structural Drawings but not less than the following:

a. Zone 1 (Roof Area Field): 35 lbf/sq. ft.
b. Zone 2 (Roof Area Perimeter): 50 lbf/sq. ft.
c. Zone 3 (Roof Area Corners): 75 lbf/sq. ft.

D. Energy Performance: Roofing system shall have an initial solar reflectance of not less than 0.70 and an emissivity of not less than 0.75 when tested according to CRRC-1.

E. Exterior Fire-Test Exposure: ASTM E 108 or UL 790, Class A; for application and roof slopes indicated; testing by a qualified testing agency. Identify products with appropriate markings of applicable testing agency.

2.02 THERMOPLASTIC POLYOLEFIN (TPO) ROOFING

A. TPO Sheet: ASTM D 6878/D 6878M, internally fabric- or scrim-reinforced, TPO sheet.

1. Basis of Design: Design is based on TPO roof membrane products manufactured by GAF. Subject to compliance with requirements, available manufacturers offering products that may be incorporated into the Work include, but are not limited to the following:

a. Carlisle SynTec Incorporated.
b. Firestone Building Products.
c. Johns Manville; a Berkshire Hathaway company.
d. Versico Incorporated.

2. Minimum Thickness: 80 mils.
3. Exposed Face Color: White, and GAF Terra Cotta 815.
4. Three Year Aged Solar Reflectance: 0.55
5. Thermal Emittance: 0.75

B. Source Limitations: Obtain components for roofing system from roof membrane manufacturer or manufacturers approved by roof membrane manufacturer.

2.03 AUXILIARY ROOFING MATERIALS

A. General: Auxiliary materials recommended by roofing system manufacturer for intended use and compatible with other roofing components.

1. Adhesives and Sealants: Comply with VOC limits of authorities having jurisdiction.

B. Sheet Flashing: Manufacturer's standard unreinforced TPO sheet flashing, 55 mils thick, minimum, of same color as TPO sheet.

C. Prefabricated Pipe Flashings: As recommended by roof membrane manufacturer.

D. Bonding Adhesive: Manufacturer's standard.

E. Metal Termination Bars: Manufacturer's standard, predrilled stainless steel or aluminum bars, approximately 1 by 1/8 inch thick; with anchors.

F. Metal Battens: Manufacturer's standard, aluminum-zinc-alloy-coated or zinc-coated steel sheet, approximately 1 inch wide by 0.05 inch thick, pre-punched.

G. Fasteners: Factory-coated steel fasteners and metal or plastic plates complying with corrosion-resistance provisions in FM Approvals 4470, designed for fastening roofing components to substrate, and acceptable to roofing system manufacturer.

H. Miscellaneous Accessories: Provide pourable sealers, preformed cone and vent sheet flashings, preformed inside and outside corner sheet flashings, T-joint covers, lap sealants, termination reglets, and other accessories.

2.04 ROOF INSULATION

A. General: Preformed roof insulation boards manufactured or approved by TPO roof membrane manufacturer.

B. Polyisocyanurate Board Insulation: ASTM C 1289, Type II, Class 1, Grade 3, felt or glass-fiber mat facer on both major surfaces.

1. Manufacturers: Subject to compliance with requirements, available manufacturers offering products that may be incorporated into the Work include, but are not limited to the following:

   a. Atlas Roofing Corporation.
   b. Carlisle SynTec Incorporated.
   c. Firestone Building Products.
   d. GAF.
   e. Hunter Panels.
   f. Insulfoam-a division of Carlisle Construction Materials Inc.
   g. Johns Manville; a Berkshire Hathaway company.
   h. Rmax, Inc.

2. Compressive Strength: 25 psi.
3. Thickness:

   a. Base Layer: 1-1/2 inches.
   b. Upper Layer: As required to obtain R-value indicated on Drawings.

C. Tapered Insulation: Provide factory-tapered insulation boards.

1. Material: Match roof insulation.

2. Minimum Thickness: 1/4 inch.
3. Slope for Saddles and Crickets: 1/2 inch per foot unless otherwise indicated on Drawings.

2.05 INSULATION ACCESSORIES

A. General: Roof insulation accessories recommended by insulation manufacturer for intended use and compatibility with other roofing system components.

B. Fasteners: Factory-coated steel fasteners and metal or plastic plates complying with corrosion-resistance provisions in FM Approvals 4470, designed for fastening roof insulation and cover boards to substrate, and acceptable to roofing system manufacturer.

C. Insulation Adhesive: Insulation manufacturer's recommended adhesive formulated to attach roof insulation to substrate or to another insulation layer as follows:

1. Bead-applied, low-rise, one-component or multicomponent urethane adhesive.
2. Full-spread, spray-applied, low-rise, two-component urethane adhesive.

D. Cover Board: ASTM C 1289 Type II, Class 4, Grade 1, minimum 1/2-inch-thick polyisocyanurate, with a minimum compressive strength of 100 psi.

1. Basis of Design: Design is based on Versico SecureShield HD Plus. Subject to compliance with requirements, provide named product or comparable product approved by Architect by one of the following:

a. Firestone Building Products.
b. Hunter Panels.
c. Johns Manville; a Berkshire Hathaway company.

2.06 WALKWAYS

A. Flexible Walkways: Factory-formed, nonporous, heavy-duty, slip-resisting, surface-textured walkway pads, approximately 3/16 inch thick and acceptable to roofing system manufacturer.

1. Size: Approximately 36 by 60 inches.
2. Color: Contrasting with roof membrane.

PART 3 - EXECUTION

3.01 EXAMINATION

A. Examine substrates, areas, and conditions, with Installer present, for compliance with requirements and other conditions affecting performance of the Work.

1. Verify that roof openings and penetrations are in place, curbs are set and braced, and roof-drain bodies are securely clamped in place.
2. Verify that wood blocking, curbs, and nailers are securely anchored to roof deck at penetrations and terminations and that nailers match thicknesses of insulation.

3. Verify that surface plane flatness and fastening of steel roof deck complies with requirements in Division 05 Section "Steel Decking."

B. Proceed with installation only after unsatisfactory conditions have been corrected.

3.02 PREPARATION

A. Clean substrate of dust, debris, moisture, and other substances detrimental to roofing system installation according to roofing system manufacturer's written instructions. Remove sharp projections.

B. Prevent materials from entering and clogging roof drains and conductors and from spilling or migrating onto surfaces of other construction. Remove roof-drain plugs when no work is taking place or when rain is forecast.

C. Install sound-absorbing insulation strips and air dams according to acoustical roof deck manufacturer's written instructions.

3.03 ROOFING INSTALLATION, GENERAL

A. Install roofing system according to roofing system manufacturer's written instructions.

B. Complete terminations and base flashings and provide temporary seals to prevent water from entering completed sections of roofing system at end of workday or when rain is forecast. Remove and discard temporary seals before beginning work on adjoining roofing.

C. Coordinate installation and transition of roofing system component serving as an air barrier with air barrier specified under Division 07 Section "Fluid-Applied Membrane Air Barriers."

3.04 INSULATION INSTALLATION

A. Coordinate installing roofing system components so insulation is not exposed to precipitation or left exposed at end of workday.

B. Comply with roofing system and insulation manufacturer's written instructions for installing roof insulation.

C. Installation Over Metal Decking:

1. Install base layer of insulation with joints staggered not less than 24 inches in adjacent rows and with long joints continuous at right angle to flutes of decking.

a. Locate end joints over crests of decking.
b. Trim insulation neatly to fit around penetrations and projections, and to fit tight to intersecting sloping roof decks.
c. Make joints between adjacent insulation boards not more than 1/4 inch in width.
d. At internal roof drains, slope insulation to create a square drain sump with each side equal to the diameter of the drain bowl plus 24 inches.
   1) Trim insulation so that water flow is unrestricted.
e. Fill gaps exceeding 1/4 inch with insulation.
f. Cut and fit insulation within 1/4 inch of nailers, projections, and penetrations.

g. Mechanically attach base layer of insulation using mechanical fasteners specifically designed and sized for fastening specified board-type roof insulation to metal decks.

1) Fasten insulation only at crests of decking.
2) Fasten insulation to resist specified uplift pressure at corners, perimeter, and field of roof.

2. Install upper layers of insulation with joints of each layer offset not less than 12 inches from previous layer of insulation.

a. Staggered end joints within each layer not less than 24 inches in adjacent rows.
b. Install with long joints continuous and with end joints staggered not less than 12 inches in adjacent rows.
c. Trim insulation neatly to fit around penetrations and projections, and to fit tight to intersecting sloping roof decks.
d. Make joints between adjacent insulation boards not more than 1/4 inch in width.
e. At internal roof drains, slope insulation to create a square drain sump with each side equal to the diameter of the drain bowl plus 24 inches.
f. Trim insulation so that water flow is unrestricted.
g. Fill gaps exceeding 1/4 inch with insulation.
h. Cut and fit insulation within 1/4 inch of nailers, projections, and penetrations.
i. Adhere each layer of insulation to substrate using adhesive to resist specified uplift requirements according to manufacturer’s instructions and as follows:

1) Set each layer of insulation in a uniform coverage of full-spread insulation adhesive, firmly pressing and maintaining insulation in place.

3.05 INSTALLATION OF COVER BOARDS

A. Install cover boards over insulation with long joints in continuous straight lines with end joints staggered between rows. Offset joints of insulation below a minimum of 6 inches in each direction.

1. Trim cover board neatly to fit around penetrations and projections, and to fit tight to intersecting sloping roof decks.
2. At internal roof drains, conform to slope of drain sump.

a. Trim cover board so that water flow is unrestricted.

3. Cut and fit cover board tight to nailers, projections, and penetrations.
4. Adhere cover board to substrate using adhesive to resist specified uplift requirements according to manufacturer’s instructions and one of the following at the Contractor’s option:

a. Set cover board in a uniform coverage of full-spread insulation adhesive, firmly pressing and maintaining insulation in place.

3.06 ADHERED ROOFING INSTALLATION

A. Adhere roof membrane over area to receive roofing according to roofing system manufacturer's written instructions.

B. Unroll roof membrane and allow to relax before installing.

C. Start installation of roofing in presence of roofing system manufacturer's technical personnel Owner's testing and inspection agency.

D. Accurately align roof membrane, and maintain uniform side and end laps of minimum dimensions required by manufacturer. Stagger end laps.

E. Bonding Adhesive: Apply to substrate and underside of roof membrane at rate required by manufacturer, and allow to partially dry before installing roof membrane. Do not apply to splice area of roof membrane.

F. In addition to adhering, mechanically fasten roof membrane securely at terminations, penetrations, and perimeter of roofing.

G. Apply roof membrane with side laps shingled with slope of roof deck where possible.

H. Seams: Clean seam areas, overlap roofing, and hot-air weld side and end laps of roof membrane and sheet flashings to ensure a watertight seam installation.

1. Test lap edges with probe to verify seam weld continuity. Apply lap sealant to seal cut edges of roof membrane and sheet flashings.
2. Verify field strength of seams a minimum of twice daily, and repair seam sample areas.
3. Repair tears, voids, and lapped seams in roof membrane that do not comply with requirements.

I. Spread sealant bed over deck-drain flange at roof drains, and securely seal roof membrane in place with clamping ring.

3.07 BASE FLASHING INSTALLATION

A. Install sheet flashings and preformed flashing accessories, and adhere to substrates according to roofing system manufacturer's written instructions.

B. Apply bonding adhesive to substrate and underside of sheet flashing at required rate, and allow to partially dry. Do not apply to seam area of flashing.

C. Flash penetrations and field-formed inside and outside corners with cured or uncured sheet flashing.

D. Clean seam areas, overlap, and firmly roll sheet flashings into the adhesive. Hot-air weld side and end laps to ensure a watertight seam installation.

E. Terminate and seal top of sheet flashings and mechanically anchor to substrate through termination `bars.

3.08 WALKWAY INSTALLATION

A. Flexible Walkways: Install walkway products according to manufacturer's written instructions.

1. Install flexible walkways at the following locations:

a. Perimeter of each rooftop unit.
b. Between each rooftop unit location, creating a continuous path connecting rooftop unit locations.
c. Between each roof hatch and each rooftop unit location or path connecting rooftop unit locations.
d. Top and bottom of each roof access ladder.
e. Between each roof access ladder and each rooftop unit location or path connecting rooftop unit locations.
f. Locations indicated on Drawings.
g. As required by roof membrane manufacturer's warranty requirements.

2. Provide 6-inch clearance between adjoining pads.
3. Heat weld to substrate or adhere walkway products to substrate with compatible adhesive according to roofing system manufacturer's written instructions.

3.09 FIELD QUALITY CONTROL

A. Testing Agency: Owner will engage a qualified testing agency to inspect substrate conditions, surface preparation, roof membrane application, sheet flashings, protection, and drainage components, and to furnish reports to Architect.

B. Owner will engage a qualified testing agency to perform the following tests:

1. Low-Voltage Electrical Conductance Testing: Testing agency shall survey entire roof area and flashings to locate discontinuity in the roof membrane using an exposed metal electrical loop to create an electrical field tested with handheld probes or a scanning platform with integral perimeter electrical loops creating a complete electrical field.

a. Perform tests before overlying construction is placed.
b. After testing, repair areas of discontinuities, repeat tests, and make further repairs until roofing and flashing installations are contiguous.

1) Cost of retesting is Contractor's responsibility.

c. Testing agency shall prepare survey report indicating locations of initial discontinuities, if any.

C. Final Roof Inspection: Arrange for roofing system manufacturer's technical personnel to inspect roofing installation on completion, in presence of Architect, and to prepare inspection report.

D. Repair or remove and replace components of roofing system where inspections indicate that they do not comply with specified requirements.

E. Additional testing and inspecting, at Contractor's expense, will be performed to determine if replaced or additional work complies with specified requirements.

3.10 PROTECTING AND CLEANING

A. Protect roofing system from damage and wear during remainder of construction period. When remaining construction does not affect or endanger roofing, inspect roofing system for deterioration and damage, describing its nature and extent in a written report, with copies to Architect and Owner.

B. Correct deficiencies in or remove roofing system that does not comply with requirements, repair substrates, and repair or reinstall roofing system to a condition free of damage and deterioration at time of Substantial Completion and according to warranty requirements.

C. Clean overspray and spillage from adjacent construction using cleaning agents and procedures recommended by manufacturer of affected construction.

END OF SECTION

SECTION 07 62 00
SHEET METAL FLASHING AND TRIM

PART 1 - GENERAL

1.01 SUMMARY

A. Section includes:

1. Manufactured reglets with counterflashing.
2. Formed low-slope roof sheet metal fabrications.
3. Formed wall sheet metal fabrications.

B. Related Sections include:

1. Division 06 Section “Miscellaneous Rough Carpentry” for wood nailers, curbs, and blocking.
2. Division 07 Section “Formed Metal Wall Panels” for sheet metal flashing and trim integral with metal wall panels.
3. Division 07 Section “Roof Accessories” for set-on-type curbs, equipment supports, roof hatches, and other manufactured roof accessory units.

1.02 COORDINATION

A. Coordinate sheet metal flashing and trim layout and seams with sizes and locations of penetrations to be flashed, and joints and seams in adjacent materials.

B. Coordinate sheet metal flashing and trim installation with adjoining roofing and wall materials, joints, and seams to provide leakproof, secure, and noncorrosive installation.

1.03 PREINSTALLATION MEETINGS

A. Preinstallation Conference: Conduct conference at Project site.

1. Review construction schedule. Verify availability of materials, Installer's personnel, equipment, and facilities needed to make progress and avoid delays.
2. Review special roof details, roof drainage, roof-penetration flashing, equipment curbs, and condition of other construction that affect sheet metal flashing and trim.
3. Review requirements for insurance and certificates if applicable.
4. Review sheet metal flashing observation and repair procedures after flashing installation.

1.04 ACTION SUBMITTALS

A. Product Data: For each type of product.

1. Include construction details, material descriptions, dimensions of individual components and profiles, and finishes for each manufactured product and accessory.

B. Shop Drawings: For sheet metal flashing and trim.

1. Include plans, elevations, sections, and attachment details.
2. Detail fabrication and installation layouts, expansion-joint locations, and keyed details. Distinguish between shop- and field-assembled work.
3. Include identification of material, thickness, weight, and finish for each item and location in Project.
4. Include details for forming, including profiles, shapes, seams, and dimensions.
5. Include details for joining, supporting, and securing, including layout and spacing of fasteners, cleats, clips, and other attachments. Include pattern of seams.
6. Include details of termination points and assemblies.
7. Include details of expansion joints and expansion-joint covers, including showing direction of expansion and contraction from fixed points.
8. Include details of roof-penetration flashing.
9. Include details of edge conditions, including eaves, ridges, valleys, rakes, crickets, and counterflashings as applicable.
10. Include details of special conditions.
11. Include details of connections to adjoining work.
12. Detail formed flashing and trim at scale of not less than 1-1/2 inches per 12 inches.

C. Samples: For each type of sheet metal and accessory indicated with factory-applied finishes.

1.05 INFORMATIONAL SUBMITTALS

A. Qualification Data: For fabricator.

B. Product Certificates: For each type of coping and roof edge flashing that is SPRI ES-1 tested.

C. Sample Warranty: For special warranty.

1.06 CLOSEOUT SUBMITTALS

A. Maintenance Data: For sheet metal flashing and trim, and its accessories, to include in maintenance manuals.

1.07 QUALITY ASSURANCE

A. Fabricator Qualifications: Employs skilled workers who custom fabricate sheet metal flashing and trim similar to that required for this Project and whose products have a record of successful in-service performance.

1. For copings and roof edge flashings that are SPRI ES-1 tested, shop shall be listed as able to fabricate required details as tested and approved.

B. Mockups: Provide sheet metal flashing and trim required to construct integrated exterior mockup specified in Division 01 Section “Mockups.”

1.08 DELIVERY, STORAGE, AND HANDLING

A. Do not store sheet metal flashing and trim materials in contact with other materials that might cause staining, denting, or other surface damage. Store sheet metal flashing and trim materials away from uncured concrete and masonry.

B. Protect strippable protective covering on sheet metal flashing and trim from exposure to sunlight and high humidity, except to extent necessary for period of sheet metal flashing and trim installation.

1.09 WARRANTY

A. Special Warranty on Finishes: Manufacturer agrees to repair finish or replace sheet metal flashing and trim that shows evidence of deterioration of factory-applied finishes within specified warranty period.

1. Exposed Panel Finish: Deterioration includes, but is not limited to, the following:

a. Color fading more than 5 Hunter units when tested according to ASTM D 2244.
b. Chalking in excess of a No. 8 rating when tested according to ASTM D 4214.
c. Cracking, checking, peeling, or failure of paint to adhere to bare metal.

2. Finish Warranty Period: 20 years from date of Substantial Completion.

PART 2 - PRODUCTS

2.01 PERFORMANCE REQUIREMENTS

A. General: Sheet metal flashing and trim assemblies shall withstand wind loads, structural movement, thermally induced movement, and exposure to weather without failure due to defective manufacture, fabrication, installation, or other defects in construction. Completed sheet metal flashing and trim shall not rattle, leak, or loosen, and shall remain watertight.

B. Sheet Metal Standard for Flashing and Trim: Comply with NRCA's “The NRCA Roofing Manual” and SMACNA's “Architectural Sheet Metal Manual” requirements for dimensions and profiles shown unless more stringent requirements are indicated.

C. SPRI Wind Design Standard: Manufacture and install copings and roof edge flashings tested according to SPRI ES-1 and capable of resisting the following design pressure:

1. Design Pressure: Determine positive and negative wind pressures according to SPRI ES-1 using wind speed criteria indicated on Structural Drawings.

D. Thermal Movements: Allow for thermal movements from ambient and surface temperature changes to prevent buckling, opening of joints, overstressing of components, failure of joint sealants, failure of connections, and other detrimental effects. Base calculations on surface temperatures of materials due to both solar heat gain and nighttime-sky heat loss.

1. Temperature Change: 120 deg F, ambient; 180 deg F, material surfaces.

2.02 SHEET METALS

A. General: Protect mechanical and other finishes on exposed surfaces from damage by applying strippable, temporary protective film before shipping.

B. Stainless-Steel Sheet: ASTM A 240/A 240M or ASTM A 666, Type 304, dead soft, fully annealed; with smooth, flat surface.

1. Finish: 2D (dull, cold rolled) or 2B (bright, cold rolled).

C. Metallic-Coated Steel Sheet: Provide zinc-coated (galvanized) steel sheet according to ASTM A 653/A 653M, G90 coating designation or aluminum-zinc alloy-coated steel sheet according to ASTM A 792/A 792M, Class AZ50 coating designation, Grade 40; prepainted by coil-coating process to comply with ASTM A 755/A 755M.

1. Surface: Smooth, flat.
2. Exposed Coil-Coated Finish: Two-coat fluoropolymer complying with AAMA 621 and containing not less than 70 percent PVDF resin by weight in color coat. Prepare, pretreat, and apply coating to exposed metal surfaces to comply with coating and resin manufacturers' written instructions.

    a. Color: Match Metal Composite Wall Panels.

3. Concealed Finish: Pretreat with manufacturer's standard white or light-colored acrylic or polyester backer finish, consisting of prime coat and wash coat with minimum total dry film thickness of 0.5 mil.

D. Lead Sheet: ASTM B 749, Type L51121, copper-bearing lead sheet.

2.03 UNDERLAYMENT MATERIALS

A. Felt: ASTM D 226/D 226M, Type II (No. 30), asphalt-saturated organic felt; nonperforated.

B. Self-Adhering, High-Temperature Sheet: Minimum 30 mils thick, consisting of a slip-resistant polyethylene- or polypropylene-film top surface laminated to a layer of butyl- or SBS-modified asphalt adhesive, with release-paper backing; specifically designed to withstand high metal temperatures beneath metal roofing. Provide primer according to written recommendations of underlayment manufacturer.

1. Manufacturers: Subject to compliance with requirements, available manufacturers offering products that may be incorporated into the Work include, but are not limited to the following:

    a. Carlisle Coatings & Waterproofing Inc.
    b. GCP Applied Technologies Inc. (formerly Grace Construction Products).
    c. Henry Company.
    d. Kirsch Building Products, LLC.
    e. Owens Corning.
    f. Polyguard Products, Inc.

2. Thermal Stability: ASTM D 1970; stable after testing at 240 deg F or higher.
3. Low-Temperature Flexibility: ASTM D 1970; passes after testing at minus 20 deg F or lower.

C. Slip Sheet: Rosin-sized building paper, 3 lb/100 sq. ft. minimum.

2.04 MISCELLANEOUS MATERIALS

A. General: Provide materials and types of fasteners, solder, protective coatings, sealants, and other miscellaneous items as required for complete sheet metal flashing and trim installation and as recommended by manufacturer of primary sheet metal or manufactured item unless otherwise indicated.

B. Fasteners: Wood screws, annular threaded nails, self-tapping screws, self-locking rivets and bolts, and other suitable fasteners designed to withstand design loads and recommended by manufacturer of primary sheet metal or manufactured item.

1. General: Blind fasteners or self-drilling screws, gasketed, with hex-washer head.

a. Exposed Fasteners: Heads matching color of sheet metal using plastic caps or factory-applied coating. Provide metal-backed EPDM or PVC sealing washers under heads of exposed fasteners bearing on weather side of metal.
b. Blind Fasteners: High-strength aluminum or stainless-steel rivets suitable for metal being fastened.

2. Fasteners for Stainless-Steel Sheet: Series 300 stainless steel.
3. Fasteners for Metalic-Coated Steel Sheet: Series 300 stainless steel or hot-dip galvanized steel according to ASTM A 153/A 153M or ASTM F 2329.

C. Solder for Stainless Steel: ASTM B 32, Grade Sn60, with acid flux of type recommended by stainless-steel sheet manufacturer.

D. Sealant Tape: Pressure-sensitive, 100 percent solids, polyisobutylene compound sealant tape with release-paper backing. Provide permanently elastic, nonsag, nontoxic, nonstaining tape 1/2 inch wide and 1/8 inch thick.

E. Elastomeric Sealant: ASTM C 920, elastomeric silicone polymer sealant; of type, grade, class, and use classifications required to seal joints in sheet metal flashing and trim and remain watertight.

F. Butyl Sealant: ASTM C 1311, single-component, solvent-release butyl rubber sealant; polyisobutylene plasticized; heavy bodied for hooked-type expansion joints with limited movement.

G. Bituminous Coating: Cold-applied asphalt emulsion according to ASTM D 1187.

H. Asphalt Roofing Cement: ASTM D 4586, asbestos free, of consistency required for application.

2.05 MANUFACTURED SHEET METAL FLASHING AND TRIM

A. Reglets: Units of type, material, and profile required, formed to provide secure interlocking of separate reglet and counterflashing pieces, and compatible with flashing indicated with factory-mitered and -welded corners and junctions and with interlocking counterflashing on exterior face, of same metal as reglet.

1. Manufacturers: Subject to compliance with requirements, available manufacturers offering products that may be incorporated into the Work include, but are not limited to the following:

a. Fry Reglet Corporation.
b. Heckmann Building Products, Inc.
c. Hohmann & Barnard, Inc.
d. National Sheet Metal Systems, Inc.

2. Material: Metallic-coated steel, 0.022 inch thick.
3. Surface-Mounted Type: Provide with slotted holes for fastening to substrate, with neoprene or other suitable weatherproofing washers, and with channel for sealant at top edge.
4. Accessories:

   a. Flexible-Flashing Retainer: Provide resilient plastic or rubber accessory to secure flexible flashing in reglet where clearance does not permit use of standard metal counterflashing or where Drawings show reglet without metal counterflashing.
   b. Counterflashing Wind-Restraint Clips: Provide clips to be installed before counterflashing to prevent wind uplift of counterflashing's lower edge.

5. Finish: Match Metal Composite Wall Panels.

2.06 FABRICATION, GENERAL

A. General: Custom fabricate sheet metal flashing and trim to comply with details shown and recommendations in cited sheet metal standard that apply to design, dimensions, geometry, metal thickness, and other characteristics of item required. Fabricate sheet metal flashing and trim in shop to greatest extent possible.

   1. Fabricate sheet metal flashing and trim in thickness or weight needed to comply with performance requirements, but not less than that specified for each application and metal.
   2. Obtain field measurements for accurate fit before shop fabrication.
   3. Form sheet metal flashing and trim to fit substrates without excessive oil canning, buckling, and tool marks; true to line, levels, and slopes; and with exposed edges folded back to form hems.
   4. Conceal fasteners and expansion provisions where possible. Do not use exposed fasteners on faces exposed to view.

B. Fabrication Tolerances: Fabricate sheet metal flashing and trim that is capable of installation to a tolerance of 1/4 inch in 20 feet on slope and location lines indicated on Drawings and within 1/8-inch offset of adjoining faces and of alignment of matching profiles.

C. Expansion Provisions: Form metal for thermal expansion of exposed flashing and trim.

   1. Form expansion joints of intermeshing hooked flanges, not less than 1 inch deep, filled with butyl sealant concealed within joints.
   2. Use lapped expansion joints only where indicated on Drawings.

D. Sealant Joints: Where movable, nonexpansion-type joints are required, form metal to provide for proper installation of elastomeric sealant according to cited sheet metal standard.

E. Fabricate cleats and attachment devices from same material as accessory being anchored or from compatible, noncorrosive metal.

F. Fabricate cleats and attachment devices of sizes as recommended by cited sheet metal standard for application, but not less than thickness of metal being secured.

G. Seams:

1. Stainless Steel: Fabricate nonmoving seams with flat-lock seams. Tin edges to be seamed, form seams, and solder.
2. Prefinished Metallic-Coated Steel: Fabricate nonmoving seams with flat-lock seams. Form seams and seal with elastomeric sealant unless otherwise recommended by sealant manufacturer for intended use. Rivet joints where necessary for strength.

H. Do not use graphite pencils to mark metal surfaces.

2.07 LOW-SLOPE ROOF SHEET METAL FABRICATIONS

A. Copings: Fabricate in minimum 96-inch-long, but not exceeding 12-foot-long, sections. Fabricate joint plates of same thickness as copings. Furnish with continuous cleats to support edge of external leg and drill elongated holes for fasteners on interior leg. Miter corners, fasten and seal watertight. Shop fabricate interior and exterior corners.

1. Joint Style: Butted with expansion space and 6-inch-wide, concealed backup plate.
2. Fabricate from metallic-coated steel, 0.040 inch thick.

B. Roof-Penetration Flashing: Fabricate from metallic-coated steel, 0.028 inch thick.

C. Roof-Drain Flashing: Fabricate from lead, 4.0 lb/sq. ft., hard tempered.

2.08 WALL SHEET METAL FABRICATIONS

A. Opening Flashings in Frame Construction: Fabricate head, sill, jamb, and similar flashings to extend 4 inches beyond wall openings. Form head and sill flashing with 2-inch-high, end dams.

1. Fabricate from stainless steel, 0.016 inch thick.

PART 3 - EXECUTION

3.01 EXAMINATION

A. Examine substrates, areas, and conditions, with Installer present, for compliance with requirements for installation tolerances, substrate, and other conditions affecting performance of the Work.

1. Verify compliance with requirements for installation tolerances of substrates.
2. Verify that substrate is sound, dry, smooth, clean, sloped for drainage, and securely anchored.
3. Verify that air- or water-resistant barriers have been installed over sheathing or backing substrate to prevent air infiltration or water penetration.

B. Proceed with installation only after unsatisfactory conditions have been corrected.

3.02 UNDERLAYMENT INSTALLATION

A. Self-Adhering Sheet Underlayment: Install self-adhering sheet underlayment, wrinkle free. Prime substrate if recommended by underlayment manufacturer. Comply with temperature restrictions of underlayment manufacturer for installation; use primer for installing underlayment at low temperatures. Apply in shingle fashion to shed water, with end laps of not less than 6 inches staggered 24 inches between courses. Overlap side edges not less than 3-1/2 inches. Roll laps and edges with roller. Cover underlayment within 14 days.

3.03 INSTALLATION, GENERAL

A. General: Anchor sheet metal flashing and trim and other components of the Work securely in place, with provisions for thermal and structural movement. Use fasteners[**, solder**], protective coatings, separators, sealants, and other miscellaneous items as required to complete sheet metal flashing and trim system.

1. Install sheet metal flashing and trim true to line, levels, and slopes. Provide uniform, neat seams with minimum exposure of solder, welds, and sealant.
2. Install sheet metal flashing and trim to fit substrates and to result in watertight performance. Verify shapes and dimensions of surfaces to be covered before fabricating sheet metal.
3. Space cleats not more than 12 inches apart. Attach each cleat with at least two fasteners. Bend tabs over fasteners.
4. Install exposed sheet metal flashing and trim with limited oil canning, and free of buckling and tool marks.
5. Torch cutting of sheet metal flashing and trim is not permitted.
6. Do not use graphite pencils to mark metal surfaces.

B. Metal Protection: Where dissimilar metals contact each other, or where metal contacts pressure-treated wood or other corrosive substrates, protect against galvanic action or corrosion by painting contact surfaces with bituminous coating or by other permanent separation as recommended by sheet metal manufacturer or cited sheet metal standard.

1. Coat concealed side of stainless-steel sheet metal flashing and trim with bituminous coating where flashing and trim contact wood, ferrous metal, or cementitious construction.
2. Underlayment: Where installing sheet metal flashing and trim directly on cementitious or wood substrates, install underlayment and cover with slip sheet.

C. Expansion Provisions: Provide for thermal expansion of exposed flashing and trim. Space movement joints at maximum of 10 feet with no joints within 24 inches of corner or intersection.

1. Form expansion joints of intermeshing hooked flanges, not less than 1 inch deep, filled with sealant concealed within joints.
2. Use lapped expansion joints only where indicated on Drawings.

D. Fasteners: Use fastener sizes that penetrate substrates as follows:

1. Wood Blocking or Sheathing: Not less than 1-1/4 inches for nails and not less than 3/4 inch for wood screws.
2. Metal Framing: Not less than recommended by fastener manufacturer to achieve maximum pull-out resistance.

E. Conceal fasteners and expansion provisions where possible in exposed work and locate to minimize possibility of leakage. Cover and seal fasteners and anchors as required for a tight installation.

F. Seal joints as required for watertight construction.

1. Use sealant-filled joints unless otherwise indicated. Embed hooked flanges of joint members not less than 1 inch into sealant. Form joints to completely conceal sealant. When ambient temperature at time of installation is between 40 and 70 deg F, set joint members for 50 percent movement each way. Adjust setting proportionately for installation at higher ambient temperatures. Do not install sealant-type joints at temperatures below 40 deg F.
2. Prepare joints and apply sealants to comply with requirements in Section 079200 “Joint Sealants.”

G. Soldered Joints: Clean surfaces to be soldered, removing oils and foreign matter. Pre-tin edges of sheets with solder to width of 1-1/2 inches; however, reduce pre-tinning where pre-tinned surface would show in completed Work.

1. Do not solder metallic-coated steel sheet.
2. Do not use torches for soldering.
3. Heat surfaces to receive solder, and flow solder into joint. Fill joint completely. Completely remove flux and spatter from exposed surfaces.
4. Stainless-Steel Soldering: Tin edges of uncoated sheets, using solder for stainless steel and acid flux. Promptly remove acid flux residue from metal after tinning and soldering. Comply with solder manufacturer's recommended methods for cleaning and neutralization.

3.04 ROOF-DRAINAGE SYSTEM INSTALLATION

A. General: Install sheet metal roof-drainage items to produce complete roof-drainage system according to cited sheet metal standard unless otherwise indicated. Coordinate installation of roof perimeter flashing with installation of roof-drainage system.

B. Downspouts: Join sections with 1-1/2-inch telescoping joints.

1. Provide hangers with fasteners designed to hold downspouts securely to walls. Locate hangers at top and bottom and at approximately 60 inches o.c.
2. Provide elbows at base of downspout to direct water away from building.
3. Connect downspouts to underground drainage system.

C. Conductor Heads: Anchor securely to wall, with elevation of conductor head rim at minimum of 1 inch below scupper discharge.

D. Expansion-Joint Covers: Install expansion-joint covers at locations and of configuration indicated. Lap joints minimum of 4 inches in direction of water flow.

3.05 ROOF FLASHING INSTALLATION

A. General: Install sheet metal flashing and trim to comply with performance requirements, sheet metal manufacturer's written installation instructions, and cited sheet metal standard. Provide concealed fasteners where possible, and set units true to line, levels, and slopes. Install work with laps, joints, and seams that are permanently watertight and weather resistant.

B. Copings: Anchor to resist uplift and outward forces according to recommendations in cited sheet metal standard unless otherwise indicated.

1. Interlock exterior bottom edge of coping with continuous cleat anchored to substrate at 24-inch centers.
2. Anchor interior leg of coping with washers and screw fasteners through slotted holes at 24-inch centers.

C. Pipe or Post Counterflashing: Install counterflashing umbrella with close-fitting collar with top edge flared for elastomeric sealant, extending minimum of 4 inches over base flashing. Install stainless-steel draw band and tighten.

D. Counterflashing: Coordinate installation of counterflashing with installation of base flashing. Insert counterflashing in reglets or receivers and fit tightly to base flashing. Extend counterflashing 4 inches over base flashing. Lap counterflashing joints minimum of 4 inches. Secure in waterproof manner by means of snap-in installation and sealant or lead wedges and sealant unless otherwise indicated.

E. Roof-Penetration Flashing: Coordinate installation of roof-penetration flashing with installation of roofing and other items penetrating roof. Seal with elastomeric sealant and clamp flashing to pipes that penetrate roof.

3.06 WALL FLASHING INSTALLATION

A. General: Install sheet metal wall flashing to intercept and exclude penetrating moisture according to cited sheet metal standard unless otherwise indicated. Coordinate installation of wall flashing with installation of wall-opening components such as windows, doors, and louvers.

B. Opening Flashings in Frame Construction: Install continuous head, sill, jamb, and similar flashings to extend 4 inches beyond wall openings.

3.07 GUTTER AND DOWNSPOUT INSTALLATION

A. General: Install sheet metal roof-drainage items to produce complete roof-drainage system according to cited sheet metal standard unless otherwise indicated. Coordinate installation of roof perimeter flashing with installation of roof-drainage system.

B. Hanging Gutters: Join sections with riveted and soldered joints. Provide for thermal expansion. Attach gutters at eave or fascia to firmly anchor them in position. Provide end closures and seal watertight with sealant. Slope to downspouts.

1. Fasten gutter spacers to front and back of gutter.
2. Anchor and loosely lock back edge of gutter to continuous cleat.
3. Anchor gutter with gutter brackets spaced as shown on Drawings apart and loosely lock to front gutter bead.
4. Install gutter with expansion joints at locations indicated, but not exceeding, 50 feet apart. Install expansion-joint caps.

5. Install continuous gutter screens on gutters with noncorrosive fasteners, removable for cleaning gutters.

C. Downspouts: Join sections with 1-1/2-inch telescoping joints.

1. Provide hangers with fasteners designed to hold downspouts securely to walls. Locate hangers at top and bottom and at approximately 60 inches o.c.
2. Connect downspouts to underground drainage system.

3.08 ERECTION TOLERANCES

A. Installation Tolerances: Shim and align sheet metal flashing and trim within installed tolerance of 1/4 inch in 20 feet on slope and location lines indicated on Drawings and within 1/8-inch offset of adjoining faces and of alignment of matching profiles.

3.09 CLEANING AND PROTECTION

A. Clean exposed metal surfaces of substances that interfere with uniform oxidation and weathering.

B. Clean and neutralize flux materials. Clean off excess solder.

C. Clean off excess sealants.

D. Remove temporary protective coverings and strippable films as sheet metal flashing and trim are installed unless otherwise indicated in manufacturer's written installation instructions. On completion of sheet metal flashing and trim installation, remove unused materials and clean finished surfaces as recommended by sheet metal flashing and trim manufacturer. Maintain sheet metal flashing and trim in clean condition during construction.

E. Replace sheet metal flashing and trim that have been damaged or that have deteriorated beyond successful repair by finish touchup or similar minor repair procedures.

END OF SECTION

SECTION 07 65 00
FLEXIBLE FLASHING

PART 1 - GENERAL

1.01 SUMMARY

A. Section includes self-adhered butyl sheet flashing.

B. Related Sections include:

1. Division 07 Section “Fluid-Applied Membrane Air Barriers” for vapor retarding air barriers applied.
2. Division 07 Section “Sheet Metal Flashing and Trim” for exposed sheet metal flashing.

1.02 ACTION SUBMITTALS

A. Product Data: For each type of product indicated.

B. Samples: For flashing sheet, 8 inches by 12 inches.

1.03 QUALITY ASSURANCE

A. Source Limitations for Flashing: Obtain flexible flashing sheets through one source from a single manufacturer for each product required.

PART 2 - PRODUCTS

2.01 PERFORMANCE

A. Provide flexible flashing products compatible with specified air barrier systems.

B. Fire-Resistance Characteristics: For flexible flashing to be installed as a part of continuously-insulated exterior wall assembly, provide products that have been tested according NFPA 285 in similar wall assemblies. Identify products with appropriate markings of applicable testing agency.

2.02 FLEXIBLE FLASHING

A. Butyl Flashing: Composite flashing product consisting of a polyethylene-film-reinforced top surface laminated to layer of butyl adhesive with release liner backing to produce an overall thickness of not less than 0.030 inch.

1. Products: Subject to compliance with requirements, available products that may be incorporated into the Work include, but are not limited to the following:

a. DuPont Building Innovations: E. I. du Pont de Nemours and Company; DuPont Flashing Tape.

b. Grace Construction Products; W.R. Grace & Co. -- Conn.; Vycor Butyl Self Adhered Flashing.
c. Henry Company; Blueskin.
d. Protecto Wrap Company; BT-25 XL.
e. Raven Industries, Inc; Fortress Flashshield.

B. Adhesives, Primers, and Seam Tapes for Flashings: Flashing manufacturer's standard products or products recommended by flashing manufacturer for bonding flashing sheets to each other and to substrates.

PART 3 - EXECUTION

3.01 EXAMINATION

A. Examine conditions, with Installer present, for compliance with requirements for installation tolerances and other conditions affecting performance of work.

B. Proceed with installation only after unsatisfactory conditions have been corrected.

3.02 INSTALLATION

A. General: Apply flexible flashing where indicated to comply with manufacturers written instructions.

B. Install flexible flashing at ledges and other obstructions to downward flow of water in wall, and where indicated.

C. Prepare concrete surfaces so they are smooth and free from projections that could puncture flashing. Before covering flashing sheet, seal penetrations in flashing with adhesive, sealant, or tape as recommended by flashing manufacturer.

D. Prime substrates as recommended by flashing manufacturer.

E. Lap seams and junctures with other materials at least 4 inches, except that at flashing flanges of other construction, laps need not exceed flange width.

F. After flashing has been applied, roll surfaces with a hard rubber or metal roller to ensure that flashing is completely adhered to substrates.

END OF SECTION

SECTION 07 72 00
ROOF ACCESSORIES

PART 1 - GENERAL

1.01 SUMMARY

A. Section includes:

1. Roof hatches.
2. Roof curbs.
3. Equipment supports.

B. Related Sections include:

1. Division 05 Section “Metal Fabrications” for metal vertical ladders for access to roof hatches.
2. Division 07 Section “Sheet Metal Flashing and Trim” for shop- and field-formed metal flashing, roof-drainage systems, roof expansion-joint covers, and miscellaneous sheet metal trim and accessories.

1.02 COORDINATION

A. Coordinate layout and installation of roof accessories with roofing membrane and base flashing and interfacing and adjoining construction to provide a leakproof, weathertight, secure, and noncorrosive installation.

B. Coordinate dimensions with rough-in information or Shop Drawings of equipment to be supported.

1.03 ACTION SUBMITTALS

A. Product Data: For each type of roof accessory.

1. Include construction details, material descriptions, dimensions of individual components and profiles, and finishes.

B. Shop Drawings: For roof accessories.

1. Include plans, elevations, keyed details, and attachments to other work. Indicate dimensions, loadings, and special conditions. Distinguish between plant- and field-assembled work.

C. Delegated-Design Submittal: For roof curbs indicated to comply with performance requirements and design criteria, including analysis data signed and sealed by the qualified professional engineer responsible for their preparation.

1. Detail mounting, securing, and flashing of roof-mounted items to roof structure. Indicate coordinating requirements with roof membrane system.

1.04 INFORMATIONAL SUBMITTALS

A. Coordination Drawings: Roof plans, drawn to scale, and coordinating penetrations and roof-mounted items. Show the following:

1. Size and location of roof accessories specified in this Section.
2. Method of attaching roof accessories to roof or building structure.
3. Other roof-mounted items including mechanical and electrical equipment, ductwork, piping, and conduit.
4. Required clearances.

B. Sample Warranties: For manufacturer's special warranties.

1.05 CLOSEOUT SUBMITTALS

A. Operation and Maintenance Data: For roof accessories to include in operation and maintenance manuals.

1.06 WARRANTY

A. Special Warranty on Painted Finishes: Manufacturer's standard form in which manufacturer agrees to repair finishes or replace roof accessories that show evidence of deterioration of factory-applied finishes within specified warranty period.

1. Fluoropolymer Finish: Deterioration includes, but is not limited to, the following:

a. Color fading more than 5 Hunter units when tested according to ASTM D 2244.
b. Chalking in excess of a No. 8 rating when tested according to ASTM D 4214.
c. Cracking, checking, peeling, or failure of paint to adhere to bare metal.

2. Finish Warranty Period: 20 years from date of Substantial Completion.

PART 2 - PRODUCTS

2.01 PERFORMANCE REQUIREMENTS

A. General Performance: Roof accessories shall withstand exposure to weather and resist thermally induced movement without failure, rattling, leaking, or fastener disengagement due to defective manufacture, fabrication, installation, or other defects in construction.

B. Delegated Design: Engage a qualified professional engineer, as defined in Division 01 Section “Quality Requirements,” to design roof curbs to comply with wind performance requirements, including comprehensive engineering analysis by a qualified professional engineer, using performance requirements and design criteria indicated.

C. Wind-Restraint Performance: As indicated on Drawings.

2.02 ROOF HATCHES

A. Roof Hatches: Metal roof-hatch units with lids and insulated double-walled curbs, welded or mechanically fastened and sealed corner joints, continuous lid-to-curb counterflashing and weathertight perimeter gasketing, straight sides, integral metal cant, and integrally formed deck-mounting flange at perimeter bottom.

1. Manufacturers: Subject to compliance with requirements, available manufacturers offering products that may be incorporated into the Work include, but are not limited to the following:

a. ACUDOR Products, Inc.
b. Babcock-Davis.
c. BILCO Company (The).
d. O'Keeffe's Inc.
e. Pate Company (The).
f. Precision Ladders, LLC.
g. Williams Bros. Corporation of America (The).

B. Type and Size: Single-leaf lid.

C. Safety Railing System: Roof-hatch manufacturer's standard system including rails, clamps, fasteners, safety barrier at railing opening, and accessories required for a complete installation; attached to roof hatch and complying with 29 CFR 1910.23 requirements and authorities having jurisdiction.

1. Height: 42 inches above finished roof deck.
2. Posts and Rails: Galvanized-steel pipe, 1-1/4 inches in diameter or galvanized-steel tube, 1-5/8 inches in diameter.
3. Flat Bar: Galvanized steel, 2 inches high by 3/8 inch thick.
4. Maximum Opening Size: System constructed to prevent passage of a sphere 21 inches in diameter.
5. Self-Latching Gate: Fabricated of same materials and rail spacing as safety railing system. Provide manufacturer's standard hinges and self-latching mechanism.
6. Post and Rail Tops and Ends: Weather resistant, closed or plugged with prefabricated end fittings.
7. Provide weep holes or another means to drain entrapped water in hollow sections of handrail and railing members.
8. Fabricate joints exposed to weather to be watertight.
9. Fasteners: Manufacturer's standard, finished to match railing system.
10. Finish: Manufacturer's standard.
11. Operation: Post locks in place on full extension; release mechanism returns post to closed position.
12. Height: 42 inches above finished roof deck.

13. Material: Steel tube.

    a. Color: As selected by Architect from manufacturer's full range.

2.03 ROOF CURBS

A. Roof Curbs: Internally reinforced roof-curb units capable of supporting superimposed live and dead loads, including equipment loads and other construction indicated on Drawings, bearing continuously on roof structure, and capable of meeting performance requirements; with welded or mechanically fastened and sealed corner joints, stepped integral metal cant raised the thickness of roof insulation, and integrally formed deck-mounting flange at perimeter bottom.

   1. Manufacturers: Subject to compliance with requirements, available manufacturers offering products that may be incorporated into the Work include, but are not limited to the following:

      a. Bristolite Daylighting Systems, Inc.
      b. Curbs Plus, Inc.
      c. Greenheck Fan Corporation.
      d. LMCurbs.
      e. Milcor; Commercial Products Group of Hart & Cooley, Inc.
      f. Pate Company (The).
      g. Thybar Corporation.

B. Size: Coordinate dimensions with roughing-in information or Shop Drawings of equipment to be supported.

C. Supported Load Capacity: As indicated on Mechanical Drawings.

D. Material: Zinc-coated (galvanized) steel sheet, 0.064 inch minimum thickness.

   1. Finish: Factory prime coating.

E. Construction:

   1. Curb Profile: Manufacturer's standard compatible with roofing system.
   2. On ribbed or fluted metal roofs, form deck-mounting flange at perimeter bottom to conform to roof profile.
   3. Fabricate curbs to minimum height of 12 inches above roofing surface unless otherwise indicated.
   4. Top Surface: Level top of curb, with roof slope accommodated by sloping deck-mounting flange or by use of leveler frame.
   5. Insulation: Factory insulated with 1-1/2-inch- thick glass-fiber board insulation.
   6. Liner: Same material as curb, of manufacturer's standard thickness and finish.
   7. Nailer: Factory-installed wood nailer along top flange of curb or under top flange on side of curb, continuous around curb perimeter.
   8. Platform Cap: Where portion of roof curb is not covered by equipment, provide weathertight platform cap formed from 3/4-inch thick plywood covered with metal sheet of same type, thickness, and finish as required for curb.
   9. Metal Counterflashing: Manufacturer's standard, removable, fabricated of same metal and finish as curb.

2.04 EQUIPMENT SUPPORTS

A. Equipment Supports: Internally reinforced perimeter metal equipment supports capable of supporting superimposed live and dead loads between structural supports, including equipment loads and other construction indicated on Drawings, spanning between structural supports; capable of meeting performance requirements; with welded corner joints, stepped integral metal cant raised the thickness of roof insulation, and integrally formed structure-mounting flange at bottom.

1. Manufacturers: Subject to compliance with requirements, available manufacturers offering products that may be incorporated into the Work include, but are not limited to the following:

a. Curbs Plus, Inc.
b. Greenheck Fan Corporation.
c. LMCurbs.
d. Milcor; Commercial Products Group of Hart & Cooley, Inc.
e. Pate Company (The).
f. Thybar Corporation.

B. Size: Coordinate dimensions with roughing-in information or Shop Drawings of equipment to be supported.

C. Material: Zinc-coated (galvanized) or aluminum-zinc alloy-coated steel sheet, 0.064 inch thick.

1. Finish: Factory prime coating.

D. Construction:

1. Curb Profile: Profile as indicated on Drawings compatible with roofing system.
2. Nailer: Factory-installed continuous wood nailers not less than 3-1/2 inches wide on top flange of equipment supports, continuous around support perimeter.
3. Wind Restraint Straps and Base Flange Attachment: Provide wind restraint straps, welded strap connectors, and base flange attachment to roof structure at perimeter of curb of size and spacing required to meet wind uplift requirements.
4. Metal Counterflashing: Manufacturer's standard, removable, fabricated of same metal and finish as equipment support.
5. Fabricate equipment supports to minimum height of 12 inches above roofing surface unless otherwise indicated.

E. Sloping Roofs: Where roof slope exceeds 1:48, fabricate each support with height to accommodate roof slope so that tops of supports are level with each other. Equip supports with water diverters or crickets on sides that obstruct water flow.

2.05 METAL MATERIALS

A. Zinc-Coated (Galvanized) Steel Sheet: ASTM A 653/A 653M, G90 coating designation.

1. Exposed Coil-Coated Finish: Prepainted by the coil-coating process to comply with ASTM A 755/A 755M. Prepare, pretreat, and apply coating to exposed metal surfaces to comply with coating and resin manufacturers' written instructions.

    a. Two-Coat Fluoropolymer Finish: AAMA 621. System consisting of primer and fluoropolymer color topcoat containing not less than 70 percent PVDF resin by weight.

2. Concealed Finish: Pretreat with manufacturer's standard white or light-colored acrylic or polyester-backer finish consisting of prime coat and wash coat, with a minimum total dry film thickness of 0.5 mil.

B. Aluminum Sheet: ASTM B 209, manufacturer's standard alloy for finish required, with temper to suit forming operations and performance required.

1. Baked-Enamel or Powder-Coat Finish: AAMA 2603 except with a minimum dry film thickness of 1.5 mils. Comply with coating manufacturer's written instructions for cleaning, conversion coating, and applying and baking finish.
2. Concealed Finish: Pretreat with manufacturer's standard white or light-colored acrylic or polyester-backer finish consisting of prime coat and wash coat, with a minimum total dry film thickness of 0.5 mil.

C. Aluminum Extrusions and Tubes: ASTM B 221, manufacturer's standard alloy and temper for type of use, finished to match assembly where used; otherwise mill finished.

D. Steel Tube: ASTM A 500/A 500M, round tube.

E. Galvanized-Steel Tube: ASTM A 500/A 500M, round tube, hot-dip galvanized according to ASTM A 123/A 123M.

F. Steel Pipe: ASTM A 53/A 53M, galvanized.

2.06 UNDERLAYMENT MATERIALS

A. Self-Adhering, High-Temperature Sheet: Minimum 30 mils thick, consisting of a slip-resistant polyethylene- or polypropylene-film top surface laminated to a layer of butyl- or SBS-modified asphalt adhesive, with release-paper backing; specifically designed to withstand high metal temperatures beneath metal roofing. Provide primer according to written recommendations of underlayment manufacturer.

1. Manufacturers: Subject to compliance with requirements, available manufacturers offering products that may be incorporated into the Work include, but are not limited to the following:

    a. Carlisle Coatings & Waterproofing Inc.
    b. GCP Applied Technologies Inc..
    c. Henry Company.
    d. Kirsch Building Products, LLC.
    e. Owens Corning.
    f. Polyguard Products, Inc.

2. Thermal Stability: ASTM D 1970; stable after testing at 240 deg F or higher.
3. Low-Temperature Flexibility: ASTM D 1970; passes after testing at minus 20 deg F or lower.

2.07 MISCELLANEOUS MATERIALS

A. General: Provide materials and types of fasteners, protective coatings, sealants, and other miscellaneous items required by manufacturer for a complete installation.

B. Cellulosic-Fiber Board Insulation: ASTM C 208, Type II, Grade 1, thickness as indicated.

C. Glass-Fiber Board Insulation: ASTM C 726, nominal density of 3 lb/cu. ft., thermal resistivity of 4.3 deg F x h x sq. ft./Btu x in. at 75 deg F, thickness as indicated.

D. Polyisocyanurate Board Insulation: ASTM C 1289, thickness and thermal resistivity as indicated.

E. Wood Nailers: Softwood lumber, pressure treated with waterborne preservatives for aboveground use, acceptable to authorities having jurisdiction, and complying with AWPA C2; not less than 1-1/2 inches thick.

F. Gaskets: Manufacturer's standard tubular or fingered design of neoprene, EPDM, PVC, or silicone or a flat design of foam rubber, sponge neoprene, or cork.

G. Elastomeric Sealant: ASTM C 920, elastomeric polyurethane or silicone polymer sealant as recommended by roof accessory manufacturer for installation indicated; low modulus; of type, grade, class, and use classifications required to seal joints and remain watertight.

H. Butyl Sealant: ASTM C 1311, single-component, solvent-release butyl rubber sealant; polyisobutylene plasticized; heavy bodied for expansion joints with limited movement.

I. Bituminous Coating: Cold-applied asphalt emulsion complying with ASTM D 1187/D 1187M.

2.08 GENERAL FINISH REQUIREMENTS

A. Comply with NAAMM's “Metal Finishes Manual for Architectural and Metal Products” for recommendations for applying and designating finishes.

B. Appearance of Finished Work: Noticeable variations in same piece are not acceptable. Variations in appearance of adjoining components are acceptable if they are within the range of approved Samples and are assembled or installed to minimize contrast.

PART 3 - EXECUTION

3.01 EXAMINATION

A. Examine substrates, areas, and conditions, with Installer present, to verify actual locations, dimensions, and other conditions affecting performance of the Work.

B. Verify that substrate is sound, dry, smooth, clean, sloped for drainage, and securely anchored.

C. Verify dimensions of roof openings for roof accessories.

D. Proceed with installation only after unsatisfactory conditions have been corrected.

3.02 UNDERLAYMENT INSTALLATION

A. Self-Adhering Sheet Underlayment: Apply primer if required by manufacturer. Comply with temperature restrictions of underlayment manufacturer for installation. Apply wrinkle free, in shingle fashion to shed water, and with end laps of not less than 6 inches staggered 24 inches between courses. Overlap side edges not less than 3-1/2 inches. Roll laps with roller. Cover underlayment within 14 days.

1. Coordinate application of self-adhering sheet underlayment under roof specialties with requirements for continuity with adjacent air barrier materials.

3.03 INSTALLATION

A. General: Install roof accessories according to manufacturer's written instructions. Anchor accessories securely in place, with provisions for thermal and structural movement. Use fasteners, solder, protective coatings, separators, underlayments, sealants, and other miscellaneous items as required to complete roof-accessory systems.

1. Install roof accessories level; plumb; true to line and elevation; and without warping, jogs in alignment, buckling, or tool marks.
2. Provide uniform, neat seams with minimum exposure of solder and sealant.
3. Install roof accessories to fit substrates and to result in weathertight performance. Verify shapes and dimensions of surfaces to be covered before manufacture.
4. Install roof accessories to resist exposure to weather without failing, rattling, leaking, or loosening of fasteners and seals.
5. Torch cutting of roof specialties is not permitted.
6. Anchor roof accessories securely in place so they are capable of resisting indicated loads.
7. Use fasteners, separators, sealants, and other miscellaneous items as required to complete installation of roof accessories and fit them to substrates.
8. Do not use graphite pencils to mark metal surfaces.

B. Metal Protection: Protect metals against galvanic action by separating dissimilar metals from contact with each other or with corrosive substrates by painting contact surfaces with bituminous coating or by other permanent separation as recommended by manufacturer.

1. Coat concealed side of uncoated aluminum roof accessories with bituminous coating where in contact with wood, ferrous metal, or cementitious construction.
2. Underlayment: Where installing roof accessories directly on cementitious or wood substrates, install a course of underlayment and cover with manufacturer's recommended slip sheet.
3. Bed flanges in thick coat of asphalt roofing cement where required by manufacturers of roof accessories for waterproof performance.

C. Expansion Provisions: Allow for thermal expansion of exposed roof specialties.

1. Space movement joints at a maximum of 12 feet with no joints within 18 inches of corners or intersections unless otherwise indicated on Drawings.
2. When ambient temperature at time of installation is between 40 and 70 deg F, set joint members for 50 percent movement each way. Adjust setting proportionately for installation at higher ambient temperatures.

D. Fastener Sizes: Use fasteners of sizes that penetrate wood blocking or sheathing not less than 1-1/4 inches for nails and not less than 3/4 inch for wood screws.

E. Equipment Support Installation: Install equipment supports so top surfaces are level with each other.

F. Roof-Hatch Installation:

1. Verify that roof hatch operates properly. Clean, lubricate, and adjust operating mechanism and hardware.
2. Attach safety railing system to roof-hatch curb.
3. Attach ladder-assist post according to manufacturer's written instructions.

G. Roof Curb Installation: Install each roof curb so top surface is level.

H. Equipment Support Installation: Install equipment supports so top surfaces are level with each other.

I. Seal joints with elastomeric or butyl sealant as required by roof accessory manufacturer.

3.04 REPAIR AND CLEANING

A. Galvanized Surfaces: Clean field welds, bolted connections, and abraded areas and repair galvanizing according to ASTM A 780/A 780M.

B. Touch up factory-primed surfaces with compatible primer ready for field painting according to Division 09 Section "Exterior Painting."

C. Clean exposed surfaces according to manufacturer's written instructions.

D. Clean off excess sealants.

E. Replace roof accessories that have been damaged or that cannot be successfully repaired by finish touchup or similar minor repair procedures.

END OF SECTION

SECTION 07 81 00
APPLIED FIREPROOFING

PART 1 - GENERAL

1.01 SUMMARY

A. Section includes sprayed fire-resistive cementitious materials.

B. Related Sections include Division 07 Section “Intumescent Fireproofing” for mastic and intumescent fire-resistive coatings.

1.02 DEFINITIONS

A. SFRM: Sprayed fire-resistive materials.

1.03 PREINSTALLATION MEETINGS

A. Preinstallation Conference: Conduct conference at Project site.

1. Review products, design ratings, restrained and unrestrained conditions, densities, thicknesses, bond strengths, and other performance requirements.

1.04 ACTION SUBMITTALS

A. Product Data: For each type of product.

B. Shop Drawings: Framing plans or schedules, or both, indicating the following:

1. Extent of fireproofing for each construction and fire-resistance rating.
2. Applicable fire-resistance design designations of a qualified testing and inspecting agency acceptable to authorities having jurisdiction.
3. Minimum fireproofing thicknesses needed to achieve required fire-resistance rating of each structural component and assembly.
4. Treatment of fireproofing after application.

C. Samples: For each exposed product and for each color and texture specified, not less than 4 inches square in size.

1.05 INFORMATIONAL SUBMITTALS

A. Product Certificates: For each type of fireproofing.

B. Evaluation Reports: For fireproofing, from ICC-ES.

1.06 QUALITY ASSURANCE

A. Installer Qualifications: A firm or individual certified, licensed, or otherwise qualified by fireproofing manufacturer as experienced and with sufficient trained staff to install manufacturer's products according to specified requirements.

B. Mockups: Build mockups to verify selections made under Sample submittals and to to set quality standards for materials and execution.

1. Build mockup of as directed by Architect.
2. Approval of mockups does not constitute approval of deviations from the Contract Documents contained in mockups unless Architect specifically approves such deviations in writing.
3. Subject to compliance with requirements, approved mockups may become part of the completed Work if undisturbed at time of Substantial Completion.

1.07 FIELD CONDITIONS

A. Environmental Limitations: Do not apply fireproofing when ambient or substrate temperature is 44 deg F or lower unless temporary protection and heat are provided to maintain temperature at or above this level for 24 hours before, during, and for 24 hours after product application.

B. Ventilation: Ventilate building spaces during and after application of fireproofing, providing complete air exchanges according to manufacturer's written instructions. Use natural means or, if they are inadequate, forced-air circulation until fireproofing dries thoroughly.

PART 2 - PRODUCTS

2.01 PERFORMANCE REQUIREMENTS

A. Assemblies: Provide fireproofing, including auxiliary materials, according to requirements of each fire-resistance design and manufacturer's written instructions.

B. Source Limitations: Obtain fireproofing for each fire-resistance design from single source.

C. Fire-Resistance Design: Indicated on Drawings, tested according to ASTM E 119 or UL 263; testing by a qualified testing agency. Identify products with appropriate markings of applicable testing agency.

1. Steel members are to be considered unrestrained unless specifically noted otherwise.

D. Asbestos: Provide products containing no detectable asbestos.

2.02 SPRAYED FIRE-RESISTIVE MATERIALS

A. Locations:

1. Level 2 Data Center structural steel above ceiling supporting Level 3
2. Lobby structural steel above ceilings supporting Level 2 and Level 3 floors.
3. Level 2 Diagnostic Room structural steel above ceiling supporting Level 3.

B. Sprayed Fire-Resistive Material: Manufacturer's standard, factory-mixed, lightweight, dry formulation, complying with indicated fire-resistance design, and mixed with water at Project site to form a slurry or mortar before conveyance and application.

1. Basis of Design: Design is based on products listed in UL Design Numbers indicated on Drawings. Subject to compliance with requirements, provide named products or comparable products approved by Architect by one of the following:

    a. Carboline Company; a subsidiary of RPM International.
    b. GCP Applied Technologies Inc. (formerly Grace Construction Products).
    c. Isolatek International.
    d. Pyrok, Inc.
    e. Southwest Fireproofing Products Co.

2. Application: Designated for exterior use by a qualified testing agency acceptable to authorities having jurisdiction.
3. Bond Strength: Minimum 150-lbf/sq. ft. cohesive and adhesive strength based on field testing according to ASTM E 736.
4. Density: Not less than density specified in the approved fire-resistance design, according to ASTM E 605.
5. Thickness: As required for fire-resistance design indicated, measured according to requirements of fire-resistance design or ASTM E 605, whichever is thicker, but not less than 0.375 inch.
6. Combustion Characteristics: ASTM E 136.
7. Surface-Burning Characteristics: Comply with ASTM E 84; testing by a qualified testing agency. Identify products with appropriate markings of applicable testing agency.

    a. Flame-Spread Index: 10 or less.
    b. Smoke-Developed Index: 10 or less.

8. Compressive Strength: Minimum 10 lbf/sq. in. according to ASTM E 761.
9. Corrosion Resistance: No evidence of corrosion according to ASTM E 937.
10. Deflection: No cracking, spalling, or delamination according to ASTM E 759.
11. Effect of Impact on Bonding: No cracking, spalling, or delamination according to ASTM E 760.
12. Air Erosion: Maximum weight loss of 0.025 g/sq. ft. in 24 hours according to ASTM E 859.
13. Finish: Spray-textured finish.

2.03 AUXILIARY MATERIALS

A. General: Provide auxiliary materials that are compatible with fireproofing and substrates and are approved by UL or another testing and inspecting agency acceptable to authorities having jurisdiction for use in fire-resistance designs indicated.

B. Substrate Primers: Primers approved by fireproofing manufacturer and complying with one or both of the following requirements:

1. Primer and substrate are identical to those tested in required fire-resistance design by UL or another testing and inspecting agency acceptable to authorities having jurisdiction.

2. Primer's bond strength in required fire-resistance design complies with specified bond strength for fireproofing and with requirements in UL's “Fire Resistance Directory” or in the listings of another qualified testing agency acceptable to authorities having jurisdiction, based on a series of bond tests according to ASTM E 736.

C. Bonding Agent: Product approved by fireproofing manufacturer and complying with requirements in UL's “Fire Resistance Directory” or in the listings of another qualified testing agency acceptable to authorities having jurisdiction.

D. Metal Lath: Expanded metal lath fabricated from material of weight, configuration, and finish required, according to fire-resistance designs indicated and fireproofing manufacturer's written instructions. Include clips, lathing accessories, corner beads, and other anchorage devices required to attach lath to substrates and to receive fireproofing.

E. Reinforcing Fabric: Glass- or carbon-fiber fabric of type, weight, and form required to comply with fire-resistance designs indicated; approved and provided by fireproofing manufacturer.

F. Reinforcing Mesh: Metallic mesh reinforcement of type, weight, and form required to comply with fire-resistance design indicated; approved and provided by fireproofing manufacturer. Include pins and attachment.

PART 3 - EXECUTION

3.01 EXAMINATION

A. Examine substrates, areas, and conditions, with Installer present, for compliance with requirements for substrates and other conditions affecting performance of the Work and according to each fire-resistance design.

1. Verify that substrates are free of dirt, oil, grease, release agents, rolling compounds, mill scale, loose scale, incompatible primers, paints, and encapsulants, or other foreign substances capable of impairing bond of fireproofing with substrates under conditions of normal use or fire exposure.
2. Verify that objects penetrating fireproofing, including clips, hangers, support sleeves, and similar items, are securely attached to substrates.
3. Verify that substrates receiving fireproofing are not obstructed by ducts, piping, equipment, or other suspended construction that will interfere with fireproofing application.

B. Verify that concrete work on steel deck is complete before beginning fireproofing work.

C. Verify that roof construction, installation of rooftop HVAC equipment, and other related work are complete before beginning fireproofing work.

D. Conduct tests according to fireproofing manufacturer's written instructions to verify that substrates are free of substances capable of interfering with bond.

E. Prepare written report, endorsed by Installer, listing conditions detrimental to performance of the Work.

F. Proceed with installation only after unsatisfactory conditions have been corrected.

3.02 PREPARATION

A. Cover other work subject to damage from fallout or overspray of fireproofing materials during application.

B. Clean substrates of substances that could impair bond of fireproofing.

C. Prime substrates where included in fire-resistance design and where recommended in writing by fireproofing manufacturer unless compatible shop primer has been applied and is in satisfactory condition to receive fireproofing.

D. For applications visible on completion of Project, repair substrates to remove surface imperfections that could affect uniformity of texture and thickness in finished surface of fireproofing. Remove minor projections and fill voids that would telegraph through fire-resistive products after application.

3.03 APPLICATION

A. Construct fireproofing assemblies that are identical to fire-resistance design indicated and products as specified, tested, and substantiated by test reports; for thickness, primers, sealers, topcoats, finishing, and other materials and procedures affecting fireproofing work.

B. Comply with fireproofing manufacturer's written instructions for mixing materials, application procedures, and types of equipment used to mix, convey, and apply fireproofing; as applicable to particular conditions of installation and as required to achieve fire-resistance ratings indicated.

C. Coordinate application of fireproofing with other construction to minimize need to cut or remove fireproofing.

1. Do not begin applying fireproofing until clips, hangers, supports, sleeves, and other items penetrating fireproofing are in place.
2. Defer installing ducts, piping, and other items that would interfere with applying fireproofing until application of fireproofing is completed.

D. Metal Decks:

1. Do not apply fireproofing to underside of metal deck substrates until concrete topping, if any, is completed.
2. Do not apply fireproofing to underside of metal roof deck until roofing is completed; prohibit roof traffic during application and drying of fireproofing.

E. Install auxiliary materials as required, as detailed, and according to fire-resistance design and fireproofing manufacturer's written instructions for conditions of exposure and intended use. For auxiliary materials, use attachment and anchorage devices of type recommended in writing by fireproofing manufacturer.

F. Spray apply fireproofing to maximum extent possible. After the spraying operation in each area, complete the coverage by trowel application or other placement method recommended in writing by fireproofing manufacturer.

G. Extend fireproofing in full thickness over entire area of each substrate to be protected.

H. Install body of fireproofing in a single course unless otherwise recommended in writing by fire-proofing manufacturer.

I. For applications over encapsulant materials, including lockdown (post-removal) encapsulants, apply fireproofing that differs in color from that of encapsulant over which it is applied.

J. Where sealers are used, apply products that are tinted to differentiate them from fireproofing over which they are applied.

K. Provide a uniform finish complying with description indicated for each type of fireproofing material and matching finish approved for required mockups.

L. Cure fireproofing according to fireproofing manufacturer's written instructions.

M. Do not install enclosing or concealing construction until after fireproofing has been applied, inspected, and tested and corrections have been made to deficient applications.

N. Finishes: Where indicated, apply fireproofing to produce the following finishes:

1. Spray-Textured Finish: Finish left as spray applied with no further treatment.

3.04 FIELD QUALITY CONTROL

A. Special Inspections: Owner will engage a qualified special inspector to perform the following special inspections:

1. Test and inspect as required by authorities having jurisdiction.

B. Perform the tests and inspections of completed Work in successive stages. Do not proceed with application of fireproofing for the next area until test results for previously completed applications of fireproofing show compliance with requirements. Tested values must equal or exceed values as specified and as indicated and required for approved fire-resistance design.

C. Fireproofing will be considered defective if it does not pass tests and inspections.

1. Remove and replace fireproofing that does not pass tests and inspections, and retest.
2. Apply additional fireproofing, per manufacturer's written instructions, where test results indicate insufficient thickness, and retest.

D. Prepare test and inspection reports.

3.05 CLEANING, PROTECTING, AND REPAIRING

A. Cleaning: Immediately after completing spraying operations in each containable area of Project, remove material overspray and fallout from surfaces of other construction and clean exposed surfaces to remove evidence of soiling.

B. Protect fireproofing, according to advice of manufacturer and Installer, from damage resulting from construction operations or other causes, so fireproofing is without damage or deterioration at time of Substantial Completion.

C. As installation of other construction proceeds, inspect fireproofing and repair damaged areas and fireproofing removed due to work of other trades.

D. Repair fireproofing damaged by other work before concealing it with other construction.

E. Repair fireproofing by reapplying it using same method as original installation or using manufacturer's recommended trowel-applied product.

END OF SECTION

SECTION 07 81 23
INTUMESCENT FIREPROOFING

PART 1 - GENERAL

1.01 SUMMARY

A. Section includes mastic and intumescent fire-resistive coatings.

B. Related Sections include Division 07 Section “Applied Fireproofing” for sprayed fire-resistive cementitious materials (SFRM).

1.02 PREINSTALLATION MEETINGS

A. Preinstallation Conference: Conduct conference at Project site.

1. Review products, design ratings, restrained and unrestrained conditions, thicknesses, and other performance requirements.

1.03 ACTION SUBMITTALS

A. Product Data: For each type of product.

B. Shop Drawings: Framing plans or schedules, or both, indicating the following:

1. Extent of fireproofing for each construction and fire-resistance rating.
2. Applicable fire-resistance design designations of a qualified testing and inspecting agency acceptable to authorities having jurisdiction.
3. Minimum fireproofing thicknesses needed to achieve required fire-resistance rating of each structural component and assembly.
4. Treatment of fireproofing after application.

C. Samples: For each exposed product and for each color and texture specified, not less than 4 inches square in size.

1.04 INFORMATIONAL SUBMITTALS

A. Product Certificates: For each type of fireproofing.

B. Evaluation Reports: For fireproofing, from ICC-ES.

1.05 QUALITY ASSURANCE

A. Installer Qualifications: A firm or individual certified, licensed, or otherwise qualified by fire-proofing manufacturer as experienced and with sufficient trained staff to install manufacturer's products according to specified requirements.

B. Mockups: Build mockups to verify selections made under Sample submittals and to demonstrate aesthetic effects.

1. Build mockup of each type of fireproofing and different substrate as directed by Architect.
2. Approval of mockups does not constitute approval of deviations from the Contract Documents contained in mockups unless Architect specifically approves such deviations in writing.
3. Subject to compliance with requirements, approved mockups may become part of the completed Work if undisturbed at time of Substantial Completion.

1.06 FIELD CONDITIONS

A. Environmental Limitations: Do not apply fireproofing when ambient or substrate temperature is 50 deg F or lower unless temporary protection and heat are provided to maintain temperature at or above this level for 24 hours before, during, and for 24 hours after product application.

B. Ventilation: Ventilate building spaces during and after application of fireproofing, providing complete air exchanges according to manufacturer's written instructions. Use natural means or, if they are inadequate, forced-air circulation until fireproofing dries thoroughly.

PART 2 - PRODUCTS

2.01 PERFORMANCE REQUIREMENTS

A. Assemblies: Provide fireproofing, including auxiliary materials, according to requirements of each fire-resistance design and manufacturer's written instructions.

B. Source Limitations: Obtain fireproofing\ for each fire-resistance design from single source.

C. Fire-Resistance Design: Indicated on Drawings, tested according to ASTM E 119 or UL 263; testing by a qualified testing agency. Identify products with appropriate markings of applicable testing agency.

1. Steel members are to be considered unrestrained unless specifically noted otherwise.

D. Asbestos: Provide products containing no detectable asbestos.

2.02 MASTIC AND INTUMESCENT FIRE-RESISTIVE COATINGS

A. Locations:

1. Level 2 Data Center exposed structural steel below ceiling
2. Lobby exposed structural steel columns and stair framing.

B. Mastic and Intumescent Fire-Resistive Coating: Manufacturer's standard, factory-mixed, multicomponent system consisting of intumescent base coat and topcoat, and complying with indicated fire-resistance design.

1. Basis of Design: Design is based on products listed in UL Design Numbers indicated on Drawings. Subject to compliance with requirements, provide named products or comparable products approved by Architect by one of the following:

a. Albi Manufacturing; a division of StanChem, Inc.
b. Carboline Company; a subsidiary of RPM International.
c. Hilti, Inc.
d. International Protective Coatings.
e. Isolatek International.
f. Sherwin-Williams Company (The).

2. Application: Designated for “exterior” use by a qualified testing agency acceptable to authorities having jurisdiction.
3. Thickness: As required for fire-resistance design indicated, measured according to requirements of fire-resistance design.
4. Surface-Burning Characteristics: Comply with ASTM E 84; testing by a qualified testing agency. Identify products with appropriate markings of applicable testing agency.

a. Flame-Spread Index: 25 or less.
b. Smoke-Developed Index: 50 or less.

5. Hardness: Not less than 65, Type D durometer, according to ASTM D 2240.
6. Finish: As selected by Architect from manufacturer's standard finishes.

a. Color and Gloss: As selected by Architect from manufacturer's full range.

2.03 AUXILIARY MATERIALS

A. General: Provide auxiliary materials that are compatible with fireproofing and substrates and are approved by UL or another testing and inspecting agency acceptable to authorities having jurisdiction for use in fire-resistance designs indicated.

B. Substrate Primers: Primers approved by fireproofing manufacturer and complying with required fire-resistance design by UL or another testing and inspecting agency acceptable to authorities having jurisdiction.

C. Reinforcing Fabric: Glass- or carbon-fiber fabric of type, weight, and form required to comply with fire-resistance designs indicated; approved and provided by fireproofing manufacturer.

D. Reinforcing Mesh: Metallic mesh reinforcement of type, weight, and form required to comply with fire-resistance design indicated; approved and provided by fireproofing manufacturer. Include pins and attachment.

E. Topcoat: Suitable for application over applied fireproofing; of type recommended in writing by fireproofing manufacturer for each fire-resistance design.

PART 3 - EXECUTION

3.01 EXAMINATION

A. Examine substrates, areas, and conditions, with Installer present, for compliance with requirements for substrates and other conditions affecting performance of the Work and according to each fire-resistance design.

1. Verify that substrates are free of dirt, oil, grease, release agents, rolling compounds, mill scale, loose scale, incompatible primers, paints, and encapsulants, or other foreign substances capable of impairing bond of fireproofing with substrates under conditions of normal use or fire exposure.
2. Verify that objects penetrating fireproofing, including clips, hangers, support sleeves, and similar items, are securely attached to substrates.
3. Verify that substrates receiving fireproofing are not obstructed by ducts, piping, equipment, or other suspended construction that will interfere with fireproofing application.

B. Conduct tests according to fireproofing manufacturer's written instructions to verify that substrates are free of substances capable of interfering with bond.

C. Prepare written report, endorsed by Installer, listing conditions detrimental to performance of the Work.

D. Proceed with installation only after unsatisfactory conditions have been corrected.

3.02 PREPARATION

A. Cover other work subject to damage from fallout or overspray of fireproofing materials during application.

B. Clean substrates of substances that could impair bond of fireproofing.

C. Prime substrates where included in fire-resistance design and where recommended in writing by fireproofing manufacturer unless compatible shop primer has been applied and is in satisfactory condition to receive fireproofing.

D. For applications visible on completion of Project, repair substrates to remove surface imperfections that could affect uniformity of texture and thickness in finished surface of fireproofing. Remove minor projections and fill voids that would telegraph through fire-resistive products after application.

3.03 APPLICATION

A. Construct fireproofing assemblies that are identical to fire-resistance design indicated and products as specified, tested, and substantiated by test reports; for thickness, primers, topcoats, finishing, and other materials and procedures affecting fireproofing work.

B. Comply with fireproofing manufacturer's written instructions for mixing materials, application procedures, and types of equipment used to mix, convey, and apply fireproofing; as applicable to particular conditions of installation and as required to achieve fire-resistance ratings indicated.

C. Coordinate application of fireproofing with other construction to minimize need to cut or remove fireproofing.

1. Do not begin applying fireproofing until clips, hangers, supports, sleeves, and other items penetrating fireproofing are in place.
2. Defer installing ducts, piping, and other items that would interfere with applying fireproofing until application of fireproofing is completed.

D. Install auxiliary materials as required, as detailed, and according to fire-resistance design and fireproofing manufacturer's written instructions for conditions of exposure and intended use. For auxiliary materials, use attachment and anchorage devices of type recommended in writing by fireproofing manufacturer.

E. Spray apply fireproofing to maximum extent possible. After the spraying operation in each area, complete the coverage by trowel application or other placement method recommended in writing by fireproofing manufacturer.

F. Extend fireproofing in full thickness over entire area of each substrate to be protected.

G. Install body of fireproofing in a single course unless otherwise recommended in writing by fireproofing manufacturer.

H. Provide a uniform finish complying with description indicated for each type of fireproofing material and matching finish approved for required mockups.

I. Cure fireproofing according to fireproofing manufacturer's written instructions.

J. Do not install enclosing or concealing construction until after fireproofing has been applied, inspected, and tested and corrections have been made to deficient applications.

K. Finishes: Where indicated, apply fireproofing to produce the following finishes:

1. Manufacturer's Standard Finishes: Finish according to manufacturer's written instructions for each finish selected.

3.04 FIELD QUALITY CONTROL

A. Special Inspections: Owner will engage a qualified special inspector to perform the following special inspections:

1. Test and inspect as required by the authorities having jurisdiction.

B. Perform the tests and inspections of completed Work in successive stages. Do not proceed with application of fireproofing for the next area until test results for previously completed applications of fireproofing show compliance with requirements. Tested values must equal or exceed values as specified and as indicated and required for approved fire-resistance design.

C. Fireproofing will be considered defective if it does not pass tests and inspections.

1. Remove and replace fireproofing that does not pass tests and inspections, and retest.
2. Apply additional fireproofing, per manufacturer's written instructions, where test results indicate insufficient thickness, and retest.

3.05 CLEANING, PROTECTING, AND REPAIRING

A. Cleaning: Immediately after completing spraying operations in each containable area of Project, remove material overspray and fallout from surfaces of other construction and clean exposed surfaces to remove evidence of soiling.

B. Protect fireproofing, according to advice of manufacturer and Installer, from damage resulting from construction operations or other causes, so fireproofing is without damage or deterioration at time of Substantial Completion.

C. As installation of other construction proceeds, inspect fireproofing and repair damaged areas and fireproofing removed due to work of other trades.

D. Repair fireproofing damaged by other work before concealing it with other construction.

E. Repair fireproofing by reapplying it using same method as original installation or using manufacturer's recommended trowel-applied product.

END OF SECTION

SECTION 07 84 13
PENETRATION FIRESTOPPING

PART 1 - GENERAL

1.01 SUMMARY

A. Section includes penetrations in fire-resistance-rated walls.

1.02 PREINSTALLATION MEETINGS

A. Preinstallation Conference: Conduct conference at Project site.

1.03 ACTION SUBMITTALS

A. Product Data: For each type of product indicated.

B. Product Schedule: For each penetration firestopping system. Include location and design designation of qualified testing and inspecting agency.

1.04 INFORMATIONAL SUBMITTALS

A. Installer Certificates: From Installer indicating penetration firestopping has been installed in compliance with requirements and manufacturer's written recommendations.

1.05 QUALITY ASSURANCE

A. Fire-Test-Response Characteristics: Penetration firestopping shall comply with the following requirements:

1. Penetration firestopping tests are performed by a qualified testing agency acceptable to authorities having jurisdiction.
2. Penetration firestopping is identical to those tested per testing standard referenced in “Pen-etration Firestopping” Article. Provide rated systems bearing marking of qualified testing and inspection agency.

PART 2 - PRODUCTS

2.01 MANUFACTURERS

A. Manufacturer: Subject to compliance with requirements, available manufacturers offering products that may be incorporated into the Work include, but are not limited to, the following:

1. Hilti, In.
2. Johns Manvill.
3. RectorSeal Corporatio.
4. Specified Technologies In.
5. 3M Fire Protection Product.
6. Tremco, Inc.; Tremco Fire Protection Systems Grou.

7. USG Corporatio.

2.02 PENETRATION FIRESTOPPING

A. Provide penetration firestopping that is produced and installed to resist spread of fire according to requirements indicated, resist passage of smoke and other gases, and maintain original fire-resistance rating of construction penetrated. Penetration firestopping systems shall be compatible with one another, with the substrates forming openings, and with penetrating items if any.

B. Penetrations in Fire-Resistance-Rated Walls: Ratings determined per ASTM E 814 or UL 1479, based on testing at a positive pressure differential of 0.01-inch wg.

1. F-Rating: Not less than the fire-resistance rating of constructions penetrated.

C. Exposed Penetration Firestopping: Provide products with flame-spread and smoke-developed indexes of less than 25 and 450, respectively, as determined per ASTM E 84.

D. Accessories: Provide components for each penetration firestopping system that are needed to install fill materials and to maintain ratings required. Use only those components specified by penetration firestopping manufacturer and approved by qualified testing and inspecting agency for firestopping indicated.

PART 3 - EXECUTION

3.01 INSTALLATION

A. Examine substrates and conditions, with Installer present, for compliance with requirements for opening configurations, penetrating items, substrates, and other conditions affecting performance of the Work.

B. Install penetration firestopping to comply with manufacturer's written installation instructions and published drawings for products and applications indicated.

C. Install forming materials and other accessories of types required to support fill materials during their application and in the position needed to produce cross-sectional shapes and depths required to achieve fire ratings indicated.

1. After installing fill materials and allowing them to fully cure, remove combustible forming materials and other accessories not indicated as permanent components of firestopping.

D. Install fill materials for firestopping by proven techniques to produce the following results:

1. Fill voids and cavities formed by openings, forming materials, accessories, and penetrating items as required to achieve fire-resistance ratings indicated.
2. Apply materials so they contact and adhere to substrates formed by openings and penetrating items.
3. Fill any voids at all times through the process.
4. For fill materials that will remain exposed after completing the Work, finish to produce smooth, uniform surfaces that are flush with adjoining finishes.

3.02 IDENTIFICATION

A. Identify penetration firestopping with preprinted metal or plastic labels. Attach labels permanently to surfaces adjacent to and within 6 inches of firestopping edge so labels will be visible to anyone seeking to remove penetrating items or firestopping. Use mechanical fasteners or self-adhering-type labels with adhesives capable of permanently bonding labels to surfaces on which labels are placed. Include the following information on labels:

1. The words "Warning - Penetration Firestopping - Do Not Disturb. Notify Building Management of Any Damage."
2. Contractor's name, address, and phone number.
3. Designation of applicable testing and inspecting agency.
4. Date of installation.
5. Manufacturer's name.
6. Installer's name.

3.03 FIELD QUALITY CONTROL

A. Owner will engage a qualified testing agency to perform tests and inspections.

B. Where deficiencies are found or penetration firestopping is damaged or removed because of testing, repair or replace penetration firestopping to comply with requirements.

C. Proceed with enclosing penetration firestopping with other construction only after inspection reports are issued and installations comply with requirements.

END OF SECTION

SECTION 07 84 43
JOINT FIRESTOPPING

PART 1 - GENERAL

1.01 SUMMARY

A. Section includes:

1. Joints in or between fire-resistance-rated constructions.
2. Perimeter fire-barrier system (safing).

B. Related Sections include Division 09 Section “Non-Structural Metal Framing” for firestop tracks for metal-framed partition heads.

1.02 PREINSTALLATION MEETINGS

A. Preinstallation Conference: Conduct conference at Project site.

1.03 ACTION SUBMITTALS

A. Product Data: For each type of product.

B. Product Schedule: For each joint firestopping system. Include location, illustration of firestopping system, and design designation of qualified testing agency.

1. Engineering Judgments: Where Project conditions require modification to a qualified testing agency's illustration for a particular joint firestopping system condition, submit illustration, with modifications marked, approved by joint firestopping system manufacturer's fire-protection engineer as an engineering judgment or equivalent fire-resistance-rated assembly.

1.04 INFORMATIONAL SUBMITTALS

A. Qualification Data: For Installer.

B. Product Test Reports: For each joint firestopping system, for tests performed by a qualified testing agency.

1.05 CLOSEOUT SUBMITTALS

A. Installer Certificates: From Installer indicating that joint firestopping systems have been installed in compliance with requirements and manufacturer's written instructions.

1.06 QUALITY ASSURANCE

A. Installer Qualifications: A firm that has been approved by FM Approvals according to FM Approvals 4991, “Approval of Firestop Contractors,” or been evaluated by UL and found to comply with UL's “Qualified Firestop Contractor Program Requirements.”

1.07 PROJECT CONDITIONS

A. Environmental Limitations: Do not install joint firestopping systems when ambient or substrate temperatures are outside limits permitted by joint firestopping system manufacturers or when substrates are wet due to rain, frost, condensation, or other causes.

B. Install and cure joint firestopping systems per manufacturer's written instructions using natural means of ventilation or, where this is inadequate, forced-air circulation.

1.08 COORDINATION

A. Coordinate construction of joints to ensure that joint firestopping systems can be installed according to specified firestopping system design.

B. Coordinate sizing of joints to accommodate joint firestopping systems.

PART 2 - PRODUCTS

2.01 PERFORMANCE REQUIREMENTS

A. Fire-Test-Response Characteristics:

1. Perform joint firestopping system tests by a qualified testing agency acceptable to authorities having jurisdiction.
2. Test per testing standards referenced in “Joint Firestopping Systems” Article. Provide rated systems complying with the following requirements:

a. Joint firestopping systems shall bear classification marking of a qualified testing agency.

1) UL in its “Fire Resistance Directory.”
2) Intertek Group in its “Directory of Listed Building Products.”

2.02 JOINT FIRESTOPPING SYSTEMS

A. Joint Firestopping Systems: Systems that resist spread of fire, passage of smoke and other gases, and maintain original fire-resistance rating of assemblies in or between which joint firestopping systems are installed. Joint firestopping systems shall accommodate building movements without impairing their ability to resist the passage of fire and hot gases.

B. Joints in or between Fire-Resistance-Rated Construction: Provide joint firestopping systems with ratings determined per ASTM E1966 or UL 2079.

1. Manufacturers: Subject to compliance with requirements, available manufacturers offering products that may be incorporated into the Work include, but are not limited to the following:

    a. Passive Fire Protection Partners.
    b. RectorSeal.
    c. Rockwool International.
    d. Specified Technologies, Inc.
    e. Thermafiber, Inc.; an Owens Corning company.
    f. Tremco, Inc.

2. Fire-Resistance Rating: Equal to or exceeding the fire-resistance rating of the wall, floor, or roof in or between which it is installed.

C. Exposed Joint Firestopping Systems: Flame-spread and smoke-developed indexes of less than 25 and 450, respectively, as determined per ASTM E84.

D. Perimeter Fire-Barrier System: Provide perimeter fire-barrier system that does not require direct screw attachment to mullions and transoms to support and fasten curtain-wall insulation for aluminum curtain-wall assemblies with one- or two-piece rectangular mullions at least 2-1/2 by 5 inches. System will be tested in accordance with ASTM E2307 for up to two-hour fire resistance and with ASTM E1233/E1233M for wind cycling equivalent to 108 mph wind for 500 cycles.

1. Where UL-classified systems are indicated, they refer to system numbers in UL's online directory “Product iQ” under product Category XHDG.

E. Accessories: Provide components of joint firestopping systems, including primers and forming materials, that are needed to install elastomeric fill materials and to maintain ratings required. Use only components specified by joint firestopping system manufacturer and approved by the qualified testing agency for conditions indicated.

PART 3 - EXECUTION

3.01 EXAMINATION

A. Examine substrates and conditions, with Installer present, for compliance with requirements for joint configurations, substrates, and other conditions affecting performance of the Work.

B. Proceed with installation only after unsatisfactory conditions have been corrected.

3.02 PREPARATION

A. Surface Cleaning: Before installing joint firestopping systems, clean joints immediately to comply with fire-resistive joint system manufacturer's written instructions and the following requirements:

1. Remove from surfaces of joint substrates foreign materials that could interfere with adhesion of elastomeric fill materials or compromise fire-resistive rating.

2. Clean joint substrates to produce clean, sound surfaces capable of developing optimum bond with elastomeric fill materials. Remove loose particles remaining from cleaning operation.
3. Remove laitance and form-release agents from concrete.

B. Prime substrates where recommended in writing by joint firestopping system manufacturer using that manufacturer's recommended products and methods. Confine primers to areas of bond; do not allow spillage and migration onto exposed surfaces.

3.03 INSTALLATION

A. General: Install joint firestopping systems to comply with manufacturer's written installation instructions and published drawings for products and applications indicated.

B. Install forming materials and other accessories of types required to support elastomeric fill materials during their application and in position needed to produce cross-sectional shapes and depths required to achieve fire ratings indicated.

1. After installing elastomeric fill materials and allowing them to fully cure, remove combustible forming materials and other accessories not indicated as permanent components of fire-resistive joint system.

C. Install elastomeric fill materials for joint firestopping systems by proven techniques to produce the following results:

1. Elastomeric fill voids and cavities formed by joints and forming materials as required to achieve fire-resistance ratings indicated.
2. Apply elastomeric fill materials so they contact and adhere to substrates formed by joints.
3. Fill any voids at all times.
4. For elastomeric fill materials that will remain exposed after completing the Work, finish to produce smooth, uniform surfaces that are flush with adjoining finishes.

3.04 IDENTIFICATION

A. Joint Identification: Identify joint firestopping systems with legible metal or plastic labels. Attach labels permanently to surfaces adjacent to and within 6 inches of joint edge so labels are visible to anyone seeking to remove or joint firestopping system. Use mechanical fasteners or self-adhering-type labels with adhesives capable of permanently bonding labels to surfaces on which labels are placed. Include the following information on labels:

1. The words “Warning - Joint Firestopping - Do Not Disturb. Notify Building Management of Any Damage.”
2. Contractor's name, address, and phone number.
3. Designation of applicable testing agency.
4. Date of installation.
5. Manufacturer's name.
6. Installer's name.

3.05 FIELD QUALITY CONTROL

A. Inspecting Agency: Owner will engage a qualified testing agency to perform tests and inspections according to ASTM E2393.

B. Where deficiencies are found or joint firestopping systems are damaged or removed due to testing, repair or replace joint firestopping systems so they comply with requirements.

C. Proceed with enclosing joint firestopping systems with other construction only after inspection reports are issued and installations comply with requirements.

3.06 CLEANING AND PROTECTION

A. Clean off excess elastomeric fill materials adjacent to joints as the Work progresses by methods and with cleaning materials that are approved in writing by joint firestopping system manufacturers and that do not damage materials in which joints occur.

B. Provide final protection and maintain conditions during and after installation that ensure joint firestopping systems are without damage or deterioration at time of Substantial Completion. If damage or deterioration occurs despite such protection, cut out and remove damaged or deteriorated joint firestopping systems immediately and install new materials to produce joint firestopping systems complying with specified requirements.

END OF SECTION

SECTION 07 92 00
JOINT SEALANTS

PART 1 - GENERAL

1.01 SUMMARY

A. Section includes:

1. Silicone joint sealants.
2. Urethane joint sealants.
3. Mildew-resistant joint sealants.
4. Latex joint sealants.

B. Related Sections include Division 07 Section “Acoustical Joint Sealants” for sealing joints in sound-rated construction.

1.02 PREINSTALLATION MEETINGS

A. Preinstallation Conference: Conduct conference at Project site.

1.03 ACTION SUBMITTALS

A. Product Data: For each joint-sealant product.

B. Samples for Initial Selection: Manufacturer's color charts consisting of strips of cured sealants showing the full range of colors available for each product exposed to view.

C. Samples for Verification: For each kind and color of joint sealant required, provide Samples with joint sealants in 1/2-inch-wide joints formed between two 6-inch-long strips of material matching the appearance of exposed surfaces adjacent to joint sealants.

D. Joint-Sealant Schedule: Include the following information:

1. Joint-sealant application, joint location, and designation.
2. Joint-sealant manufacturer and product name.
3. Joint-sealant formulation.
4. Joint-sealant color.

1.04 INFORMATIONAL SUBMITTALS

A. Field-Adhesion-Test Reports: For each sealant application tested.

B. Sample Warranties: For special warranties.

1.05 QUALITY ASSURANCE

A. Installer Qualifications: An authorized representative who is trained and approved by manufacturer.

B. Mockups: Provide exterior joint sealants and accessories required to construct integrated exterior mockup specified in Division 01 Section “Mockups.”

1.06 FIELD CONDITIONS

A. Do not proceed with installation of joint sealants under the following conditions:

1. When ambient and substrate temperature conditions are outside limits permitted by joint-sealant manufacturer or are below 40 deg F.
2. When joint substrates are wet.
3. Where joint widths are less than those allowed by joint-sealant manufacturer for applications indicated.
4. Where contaminants capable of interfering with adhesion have not yet been removed from joint substrates.

1.07 WARRANTY

A. Special Installer's Warranty: Installer agrees to repair or replace joint sealants that do not comply with performance and other requirements specified in this Section within specified warranty period.

1. Warranty Period: Two years from date of Substantial Completion.

B. Special Manufacturer's Warranty:

1. Silicone Joint Sealants: Manufacturer agrees to furnish silicone joint sealants to repair or replace those joint sealants that do not comply with performance and other requirements specified in this Section within specified warranty period.

a. Warranty Period: Ten years from date of Substantial Completion.

2. Urethane Joint Sealants: Manufacturer agrees to furnish urethane joint sealants to repair or replace those joint sealants that do not comply with performance and other requirements specified in this Section within specified warranty period.

a. Warranty Period: Five years from date of Substantial Completion.

C. Special warranties specified in this article exclude deterioration or failure of joint sealants from the following:

1. Movement of the structure caused by stresses on the sealant exceeding sealant manufacturer's written specifications for sealant elongation and compression.
2. Disintegration of joint substrates from causes exceeding design specifications.
3. Mechanical damage caused by individuals, tools, or other outside agents.

4. Changes in sealant appearance caused by accumulation of dirt or other atmospheric contaminants.

PART 2 - PRODUCTS

2.01 JOINT SEALANTS, GENERAL

A. Compatibility: Provide joint sealants, backings, and other related materials that are compatible with one another and with joint substrates under conditions of service and application, as demonstrated by joint-sealant manufacturer, based on testing and field experience.

B. Colors of Exposed Joint Sealants: As selected by Architect from manufacturer's full range.

2.02 SILICONE JOINT SEALANTS

A. Silicone, S, NS, 50, NT: Single-component, nonsag, plus 50 percent and minus 50 percent movement capability, nontraffic-use, neutral-curing silicone joint sealant; ASTM C 920, Type S, Grade NS, Class 50, Use NT.

1. Products: Subject to compliance with requirements, available products that may be incorporated into the Work include, but are not limited to the following:

a. Dow Corning Corporation; 791.
b. GE Construction Sealants; Momentive Performance Materials Inc.; SCS2000 SilPruf.
c. Pecora Corporation PCS.
d. Sika Corporation; Sikasil WS-295.

2.03 URETHANE JOINT SEALANTS

A. Urethane, S, P, 25, T, NT: Single-component, pourable, plus 25 percent and minus 25 percent movement capability, traffic- and nontraffic-use, urethane joint sealant; ASTM C 920, Type S, Grade P, Class 25, Uses T and NT.

1. Products: Subject to compliance with requirements, available products that may be incorporated into the Work include, but are not limited to the following:

a. BASF Corporation-Construction Systems; MasterSeal SL 1 (Pre-2014: Sonolastic SL1).
b. Pecora Corporation; NR-201.

2.04 MILDEW-RESISTANT JOINT SEALANTS

A. Mildew-Resistant Joint Sealants: Formulated for prolonged exposure to humidity with fungicide to prevent mold and mildew growth.

B. Silicone, Mildew Resistant, Acid Curing, S, NS, 25, NT: Mildew-resistant, single-component, nonsag, plus 25 percent and minus 25 percent movement capability, nontraffic-use, acid-curing silicone joint sealant; ASTM C 920, Type S, Grade NS, Class 25, Use NT.

1. Products: Subject to compliance with requirements, available products that may be incorporated into the Work include, but are not limited to the following:

a. Dow Corning Corporation; 786-M White.
b. GE Construction Sealants; Momentive Performance Materials Inc.; SCS1700 Sanitary.
c. Tremco Incorporated; Tremsil 200.

2.05 LATEX JOINT SEALANTS

A. Acrylic Latex: Acrylic latex or siliconized acrylic latex, ASTM C 834, Type OP, Grade NF.

1. Products: Subject to compliance with requirements, available products that may be incorporated into the Work include, but are not limited to the following:

a. BASF Construction Chemicals - Construction Systems; Sonolac.
b. Pecora Corporation; AC-20.
c. Sherwin-Williams Company (The);950A Siliconized Acrylic Latex Caulk, White.
d. Tremco Incorporated; Tremflex 834.

2.06 JOINT-SEALANT BACKING

A. Sealant Backing Material, General: Nonstaining; compatible with joint substrates, sealants, primers, and other joint fillers; and approved for applications indicated by sealant manufacturer based on field experience and laboratory testing.

B. Cylindrical Sealant Backings: ASTM C 1330, of size and density to control sealant depth and otherwise contribute to producing optimum sealant performance.

1. Provide any of the following types, as approved in writing by joint-sealant manufacturer for joint application indicated:

a. Type C (closed-cell material with a surface skin).
b. Type O (open-cell material).
c. Type B (bicellular material with a surface skin).

C. Bond-Breaker Tape: Polyethylene tape or other plastic tape recommended by sealant manufacturer for preventing sealant from adhering to rigid, inflexible joint-filler materials or joint surfaces at back of joint. Provide self-adhesive tape where applicable.

2.07 MISCELLANEOUS MATERIALS

A. Primer: Material recommended by joint-sealant manufacturer where required for adhesion of sealant to joint substrates indicated, as determined from preconstruction joint-sealant-substrate tests and field tests.

B. Cleaners for Nonporous Surfaces: Chemical cleaners acceptable to manufacturers of sealants and sealant backing materials, free of oily residues or other substances capable of staining or harming joint substrates and adjacent nonporous surfaces in any way, and formulated to promote optimum adhesion of sealants to joint substrates.

C. Masking Tape: Nonstaining, nonabsorbent material compatible with joint sealants and surfaces adjacent to joints.

PART 3 - EXECUTION

3.01 EXAMINATION

A. Examine joints indicated to receive joint sealants, with Installer present, for compliance with requirements for joint configuration, installation tolerances, and other conditions affecting performance of the Work.

B. Proceed with installation only after unsatisfactory conditions have been corrected.

3.02 PREPARATION

A. Surface Cleaning of Joints: Clean out joints immediately before installing joint sealants to comply with joint-sealant manufacturer's written instructions and the following requirements:

1. Remove all foreign material from joint substrates that could interfere with adhesion of joint sealant, including dust, paints (except for permanent, protective coatings tested and approved for sealant adhesion and compatibility by sealant manufacturer), old joint sealants, oil, grease, waterproofing, water repellents, water, surface dirt, and frost.
2. Clean porous joint substrate surfaces by brushing, grinding, mechanical abrading, or a combination of these methods to produce a clean, sound substrate capable of developing optimum bond with joint sealants. Remove loose particles remaining after cleaning operations above by vacuuming or blowing out joints with oil-free compressed air. Porous joint substrates include the following:

    a. Concrete.
    b. Unglazed surfaces of ceramic tile.

3. Remove laitance and form-release agents from concrete.
4. Clean nonporous joint substrate surfaces with chemical cleaners or other means that do not stain, harm substrates, or leave residues capable of interfering with adhesion of joint sealants. Nonporous joint substrates include the following:

    a. Metal.
    b. Glass.
    c. Glazed surfaces of ceramic tile.

B. Joint Priming: Prime joint substrates where recommended by joint-sealant manufacturer or as indicated by preconstruction joint-sealant-substrate tests or prior experience. Apply primer to comply with joint-sealant manufacturer's written instructions. Confine primers to areas of joint-sealant bond; do not allow spillage or migration onto adjoining surfaces.

C. Masking Tape: Use masking tape where required to prevent contact of sealant or primer with adjoining surfaces that otherwise would be permanently stained or damaged by such contact or by cleaning methods required to remove sealant smears. Remove tape immediately after tooling without disturbing joint seal.

3.03 INSTALLATION OF JOINT SEALANTS

A. General: Comply with joint-sealant manufacturer's written installation instructions for products and applications indicated, unless more stringent requirements apply.

B. Sealant Installation Standard: Comply with recommendations in ASTM C 1193 for use of joint sealants as applicable to materials, applications, and conditions indicated.

C. Install sealant backings of kind indicated to support sealants during application and at position required to produce cross-sectional shapes and depths of installed sealants relative to joint widths that allow optimum sealant movement capability.

1. Do not leave gaps between ends of sealant backings.
2. Do not stretch, twist, puncture, or tear sealant backings.
3. Remove absorbent sealant backings that have become wet before sealant application, and replace them with dry materials.

D. Install bond-breaker tape behind sealants where sealant backings are not used between sealants and backs of joints.

E. Install sealants using proven techniques that comply with the following and at the same time backings are installed:

1. Place sealants so they directly contact and fully wet joint substrates.
2. Completely fill recesses in each joint configuration.
3. Produce uniform, cross-sectional shapes and depths relative to joint widths that allow optimum sealant movement capability.

F. Tooling of Nonsag Sealants: Immediately after sealant application and before skinning or curing begins, tool sealants according to requirements specified in subparagraphs below to form smooth, uniform beads of configuration indicated; to eliminate air pockets; and to ensure contact and adhesion of sealant with sides of joint.

1. Remove excess sealant from surfaces adjacent to joints.
2. Use tooling agents that are approved in writing by sealant manufacturer and that do not discolor sealants or adjacent surfaces.
3. Provide concave joint profile per Figure 8A in ASTM C 1193 unless otherwise indicated.
4. Provide flush joint profile at locations indicated on Drawings according to Figure 8B in ASTM C 1193.
5. Provide recessed joint configuration of recess depth and at locations indicated on Drawings according to Figure 8C in ASTM C 1193.

    a. Use masking tape to protect surfaces adjacent to recessed tooled joints.

3.04 FIELD QUALITY CONTROL

A. Field-Adhesion Testing: Field test joint-sealant adhesion to joint substrates as follows:

1. Extent of Testing: Test completed and cured sealant joints as follows:

   a. Perform 10 Insert number tests for the first 1000 feet of joint length for each kind of sealant and joint substrate.
   b. Perform one test for each 1000 feet of joint length thereafter or one test per each floor per elevation.

2. Test Method: Test joint sealants according to Method A, Field-Applied Sealant Joint Hand Pull Tab, in Appendix X1 in ASTM C 1193 or Method A, Tail Procedure, in ASTM C 1521.

   a. For joints with dissimilar substrates, verify adhesion to each substrate separately; extend cut along one side, verifying adhesion to opposite side. Repeat procedure for opposite side.

3. Inspect tested joints and report on the following:

   a. Whether sealants filled joint cavities and are free of voids.
   b. Whether sealant dimensions and configurations comply with specified requirements.
   c. Whether sealants in joints connected to pulled-out portion failed to adhere to joint substrates or tore cohesively. Include data on pull distance used to test each kind of product and joint substrate. Compare these results to determine if adhesion complies with sealant manufacturer's field-adhesion hand-pull test criteria.

4. Record test results in a field-adhesion-test log. Include dates when sealants were installed, names of persons who installed sealants, test dates, test locations, whether joints were primed, adhesion results and percent elongations, sealant material, sealant configuration, and sealant dimensions.
5. Repair sealants pulled from test area by applying new sealants following same procedures used originally to seal joints. Ensure that original sealant surfaces are clean and that new sealant contacts original sealant.

B. Evaluation of Field-Adhesion-Test Results: Sealants not evidencing adhesive failure from testing or noncompliance with other indicated requirements will be considered satisfactory. Remove sealants that fail to adhere to joint substrates during testing or to comply with other requirements. Retest failed applications until test results prove sealants comply with indicated requirements.

3.05 CLEANING

A. Clean off excess sealant or sealant smears adjacent to joints as the Work progresses by methods and with cleaning materials approved in writing by manufacturers of joint sealants and of products in which joints occur.

3.06 PROTECTION

A. Protect joint sealants during and after curing period from contact with contaminating substances and from damage resulting from construction operations or other causes so sealants are without deterioration or damage at time of Substantial Completion. If, despite such protection, damage or deterioration occurs, cut out, remove, and repair damaged or deteriorated joint sealants immediately so installations with repaired areas are indistinguishable from original work.

3.07 JOINT-SEALANT SCHEDULE

A. Exterior and interior joints in horizontal traffic surfaces.

1. Joint Sealant: Urethane, S, P, 25, T, NT.
2. Joint-Sealant Color: As selected by Architect from manufacturer's full range of colors.

B. Exterior joints between non-porous materials in vertical surfaces and horizontal nontraffic surfaces.

1. Joint Locations:

a. Joints between metal panels.
b. Perimeter joints between materials listed above and frames of doors and windows.
c. Joints between porous substrates such as masonry, concrete, CMU or plaster.
d. Other joints as indicated on Drawings.

2. Joint Sealant: Silicone, S, NS, 50, NT.
3. Joint-Sealant Color: As selected by Architect from manufacturer's full range of colors.

C. Interior joints in horizontal traffic surfaces.

1. Joint Locations:

a. Isolation joints in cast-in-place concrete slabs.
b. Other joints as indicated on Drawings.

2. Joint Sealant: Urethane, S, P, 25, T, NT.
3. Joint-Sealant Color: As selected by Architect from manufacturer's full range of colors.

D. Interior joints in vertical surfaces and horizontal nontraffic surfaces on inside face of exterior building envelope.

1. Joint Locations:

a. Control and expansion joints on exposed interior surfaces of exterior walls.
b. Perimeter joints between interior wall surfaces and frames of exterior doors and windows and elevator entrances.
c. Other joints as indicated on Drawings.

2. Joint Sealant: Silicone, nonstaining, S, NS, 50, NT.

E. Interior joints in vertical surfaces and horizontal nontraffic surfaces not subject to significant movement.

1. Joint Locations:

a. Control joints on exposed interior surfaces of exterior walls.
b. Perimeter joints between interior wall surfaces and frames of interior doors, windows, and elevator entrances.
c. Other joints as indicated on Drawings.

2. Joint Sealant: Acrylic latex.
3. Joint-Sealant Color: As selected by Architect from manufacturer's full range of colors.

F. Mildew-resistant interior joints in vertical surfaces and horizontal nontraffic surfaces.

1. Joint Locations:

a. Joints between plumbing fixtures and adjoining walls, floors, and counters.
b. Tile control and expansion joints where indicated.
c. Other joints as indicated on Drawings.

2. Joint Sealant: Silicone, mildew resistant, acid curing, S, NS, 25, NT.
3. Joint-Sealant Color: As selected by Architect from manufacturer's full range of colors.

G. Concealed mastics.

1. Joint Locations:

a. Aluminum thresholds.
b. Sill plates.
c. Other joints as indicated on Drawings.

2. Joint Sealant: Silicone, S, NS, 50, NT.

END OF SECTION

SECTION 07 92 19
ACOUSTICAL JOINT SEALANTS

PART 1 - GENERAL

1.01 SUMMARY

A. Section includes acoustical joint sealants.

B. Related Sections include Division 07 Section “Joint Sealants” for elastomeric, latex, and butyl-rubber-based joint sealants for nonacoustical applications.

1.02 ACTION SUBMITTALS

A. Product Data: For each acoustical joint sealant.

B. Samples for Initial Selection for Acoustical Joint Sealants Exposed to View: Manufacturer's color charts consisting of strips of cured sealants showing the full range of colors available for each product exposed to view.

C. Samples for Verification: For each kind and color of acoustical joint sealant required, provide Samples with joint sealants in 1/2-inch-wide joints formed between two 6-inch-long strips of material matching the appearance of exposed surfaces adjacent to joint sealants.

D. Acoustical-Joint-Sealant Schedule: Include the following information:

1. Joint-sealant application, joint location, and designation.
2. Joint-sealant manufacturer and product name.
3. Joint-sealant formulation.
4. Joint-sealant color.

1.03 INFORMATIONAL SUBMITTALS

A. Sample Warranties: For special warranties.

1.04 WARRANTY

A. Special Installer's Warranty: Installer agrees to repair or replace acoustical joint sealants that do not comply with performance and other requirements specified in this Section within specified warranty period.

1. Warranty Period: Two years from date of Substantial Completion.

B. Special Manufacturer's Warranty: Manufacturer agrees to furnish acoustical joint sealants to repair or replace those joint sealants that do not comply with performance and other requirements specified in this Section within specified warranty period.

1. Warranty Period: Three years from date of Substantial Completion.

PART 2 - PRODUCTS

2.01 PERFORMANCE REQUIREMENTS

A. Provide acoustical joint-sealant products that effectively reduce airborne sound transmission through perimeter joints and openings in building construction, as demonstrated by testing representative assemblies according to ASTM E 90.

2.02 ACOUSTICAL JOINT SEALANTS

A. Acoustical Sealant for Exposed and Concealed Joints: Manufacturer's standard nonsag, paintable, nonstaining latex acoustical sealant complying with ASTM C 834.

1. Manufacturers: Subject to compliance with requirements, provide products by one of the following:

a. Accumetric LLC.
b. Franklin International.
c. GE Construction Sealants; Momentive Performance Materials Inc.
d. Grabber Construction Products.
e. Hilti, Inc.
f. Pecora Corporation.
g. Tremco Incorporated.
h. United States Gypsum Company.

2. Colors of Exposed Acoustical Joint Sealants: As selected by Architect from manufacturer's full range of colors.

2.03 MISCELLANEOUS MATERIALS

A. Primer: Material recommended by acoustical-joint-sealant manufacturer where required for adhesion of sealant to joint substrates.

B. Cleaners for Nonporous Surfaces: Chemical cleaners acceptable to manufacturers of sealants and sealant backing materials, free of oily residues or other substances capable of staining or harming joint substrates and adjacent nonporous surfaces in any way, and formulated to promote optimum adhesion of sealants to joint substrates.

C. Masking Tape: Nonstaining, nonabsorbent material compatible with joint sealants and surfaces adjacent to joints.

PART 3 - EXECUTION

3.01 EXAMINATION

A. Examine joints indicated to receive acoustical joint sealants, with Installer present, for compliance with requirements for joint configuration, installation tolerances, and other conditions affecting performance of the Work.

B. Proceed with installation only after unsatisfactory conditions have been corrected.

3.02 PREPARATION

A. Surface Cleaning of Joints: Clean out joints immediately before installing acoustical joint sealants to comply with joint-sealant manufacturer's written instructions.

B. Joint Priming: Prime joint substrates where recommended by acoustical-joint-sealant manufacturer. Apply primer to comply with joint-sealant manufacturer's written instructions. Confine primers to areas of joint-sealant bond; do not allow spillage or migration onto adjoining surfaces.

C. Masking Tape: Use masking tape where required to prevent contact of sealant or primer with adjoining surfaces that otherwise would be permanently stained or damaged by such contact or by cleaning methods required to remove sealant smears. Remove tape immediately after tooling without disturbing joint seal.

3.03 INSTALLATION OF ACOUSTICAL JOINT SEALANTS

A. Comply with acoustical joint-sealant manufacturer's written installation instructions unless more stringent requirements apply.

B. STC-Rated Assemblies: Seal construction at perimeters, behind control joints, and at openings and penetrations with a continuous bead of acoustical joint sealant. Install acoustical joint sealants at both faces of partitions, at perimeters, and through penetrations. Comply with ASTM C 919, ASTM C 1193, and manufacturer's written recommendations for closing off sound-flanking paths around or through assemblies, including sealing partitions to underside of floor slabs above acoustical ceilings.

3.04 CLEANING

A. Clean off excess sealant or sealant smears adjacent to joints as the Work progresses by methods and with cleaning materials approved in writing by manufacturers of acoustical joint sealants and of products in which joints occur.

3.05 PROTECTION

A. Protect acoustical joint sealants during and after curing period from contact with contaminating substances and from damage resulting from construction operations or other causes so sealants are without deterioration or damage at time of Substantial Completion. If, despite such protection, damage or deterioration occurs, cut out, remove, and repair damaged or deteriorated acoustical joint sealants immediately so installations with repaired areas are indistinguishable from original work.

END OF SECTION

SECTION 08 11 13
HOLLOW METAL DOORS AND FRAMES

PART 1 - GENERAL

1.01 SUMMARY

A. Section includes:

1. Exterior hollow-metal doors and frames.
2. Interior hollow-metal doors and frames.
3. Interior hollow-metal doors to receive flush wood doors,

B. Related Sections include Division 08 Section “Flush Wood Doors” for solid-core wood doors installed in hollow metal frames.

1.02 DEFINITIONS

A. Minimum Thickness: Minimum thickness of base metal without coatings according to NAAMM-HMMA 803 or SDI A250.8.

1.03 COORDINATION

A. Coordinate anchorage installation for hollow-metal frames. Furnish setting drawings, templates, and directions for installing anchorages, including sleeves, concrete inserts, anchor bolts, and items with integral anchors. Deliver such items to Project site in time for installation.

1.04 PREINSTALLATION MEETINGS

A. Preinstallation Conference: Conduct conference at Project site.

1.05 ACTION SUBMITTALS

A. Product Data: For each type of product.

1. Include construction details, material descriptions, core descriptions, fire-resistance ratings, and finishes.

B. Shop Drawings: Include the following:

1. Elevations of each door type.
2. Details of doors, including vertical- and horizontal-edge details and metal thicknesses.
3. Frame details for each frame type, including dimensioned profiles and metal thicknesses.
4. Locations of reinforcement and preparations for hardware.

5. Details of each different wall opening condition.
6. Details of anchorages, joints, field splices, and connections.
7. Details of accessories.
8. Details of moldings, removable stops, and glazing.
9. Details of conduit and preparations for power, signal, and control systems.

C. Samples for Verification:

1. For “Doors” and “Frames” subparagraphs below, prepare Samples approximately 12 by 12 inches to demonstrate compliance with requirements for quality of materials and construction:

    a. Doors: Show vertical-edge, top, and bottom construction; core construction; and hinge and other applied hardware reinforcement. Include separate section showing glazing if applicable.
    b. Frames: Show profile, corner joint, floor and wall anchors, and silencers. Include separate section showing fixed hollow-metal panels and glazing if applicable.

D. Schedule: Provide a schedule of hollow-metal work prepared by or under the supervision of supplier, using same reference numbers for details and openings as those on Drawings. Coordinate with final Door Hardware Schedule.

1.06 DELIVERY, STORAGE, AND HANDLING

A. Deliver hollow-metal work palletized, packaged, or crated to provide protection during transit and Project-site storage. Do not use nonvented plastic.

1. Provide additional protection to prevent damage to factory-finished units.

B. Deliver welded frames with two removable spreader bars across bottom of frames, tack welded to jambs and mullions.

C. Store hollow-metal work vertically under cover at Project site with head up. Place on minimum 4-inch-high wood blocking. Provide minimum 1/4-inch space between each stacked door to permit air circulation.

PART 2 - PRODUCTS

2.01 MANUFACTURERS

A. Manufacturers: Subject to compliance with requirements, available manufacturers offering products that may be incorporated into the Work include, but are not limited to the following:

1. Black Mountain Door, LLC.
2. Ceco Door; ASSA ABLOY.
3. Pioneer Industries.
4. Republic Doors and Frames.
5. Steelcraft; an Allegion brand.

B. Source Limitations: Obtain hollow-metal work from single source from single manufacturer.

2.02 REGULATORY REQUIREMENTS

A. Fire-Rated Assemblies: Complying with NFPA 80 and listed and labeled by a qualified testing agency acceptable to authorities having jurisdiction for fire-protection ratings indicated, based on testing at positive pressure according to NFPA 252 or UL 10C.

1. Smoke- and Draft-Control Assemblies: Provide an assembly with gaskets listed and labeled for smoke and draft control by a qualified testing agency acceptable to authorities having jurisdiction, based on testing according to UL 1784 and installed in compliance with NFPA 105.

B. Fire-Rated, Borrowed-Lite Assemblies: Complying with NFPA 80 and listed and labeled by a testing and inspecting agency acceptable to authorities having jurisdiction for fire-protection ratings indicated, based on testing according to NFPA 257 or UL 9.

2.03 INTERIOR DOOR AND FRAME ASSEMBLIES

A. Construct interior doors and frames to comply with the standards indicated for materials, fabrication, hardware locations, hardware reinforcement, tolerances, and clearances, and as specified.

B. Heavy-Duty Doors and Frames: SDI A250.8, Level 2.

1. Physical Performance: Level B according to SDI A250.4.
2. Doors:

   a. Type: As indicated in the Door and Frame Schedule.
   b. Thickness: 1-3/4 inches.
   c. Face: Uncoated, cold-rolled steel sheet, minimum thickness of 0.042 inch.
   d. Edge Construction: Model 1, Full Flush.
   e. Core: Manufacturer's standard kraft-paper honeycomb, polystyrene, polyurethane, polyisocyanurate, mineral-board, or vertical steel-stiffener core at manufacturer's discretion.

3. Frames:

   a. Materials: Uncoated steel sheet, minimum thickness of 0.053 inch.
   b. Sidelite Frames: Fabricated from same thickness material as adjacent door frame.
   c. Construction: Full profile welded.

4. Exposed Finish: Prime.

2.04 INTERIOR FRAMES

A. Construct interior frames to comply with the standards indicated for materials, fabrication, hardware locations, hardware reinforcement, tolerances, and clearances, and as specified.

B. Extra-Heavy-Duty Doors and Frames: SDI A250.8, Level 3.

1. Physical Performance: Level A according to SDI A250.4.
2. Frames:

   a. Materials: Uncoated, steel sheet, minimum thickness of 0.053 inch.
   b. Sidelite Frames: Fabricated from same thickness material as adjacent door frame.
   c. Construction: Full profile welded.

3. Exposed Finish: Prime.

2.05 EXTERIOR HOLLOW-METAL DOORS AND FRAMES

A. Construct exterior doors and frames to comply with the standards indicated for materials, fabrication, hardware locations, hardware reinforcement, tolerances, and clearances, and as specified.

B. Extra-Heavy-Duty Doors and Frames: SDI A250.8, Level 3.

1. Physical Performance: Level A according to SDI A250.4.
2. Doors:

   a. Type: As indicated in the Door and Frame Schedule.
   b. Thickness: 1-3/4 inches.
   c. Face: Metallic-coated steel sheet, minimum thickness of 0.053 inch, with minimum A60 coating.
   d. Edge Construction: Model 2, Seamless.
   e. Top Edge Closures: Close top edges of doors with flush closures of same material as face sheets. Seal joints against water penetration
   f. Bottom Edges: Close bottom edges of doors where required for attachment of weather stripping with end closures or channels of same material as face sheets. Provide weep-hole openings in bottoms of exterior doors to permit moisture to escape
   g. Core: Polystyrene, polyurethane, polyisocyanurate.

      1) Thermal-Rated Doors: Provide doors fabricated with thermal-resistance value (R-value) of not less than 4.5 deg F x h x sq. ft./Btu when tested according to ASTM C 1363.

   h. Fire-Rated Core: Manufacturer's standard vertical steel stiffener with insulation core for fire-rated doors.

3. Frames:

   a. Materials: Metallic-coated steel sheet, minimum thickness of 0.053 inch, with minimum A40 coating.
   b. Construction: Full profile welded.

4. Exposed Finish: Hot-dip galvanized to ASTM A 153.

2.06 BORROWED LITES

A. Hollow-metal frames of uncoated steel sheet, minimum thickness of 0.042 inch.

B. Construction: Full profile welded.

2.07 HOLLOW-METAL PANELS

A. Provide hollow-metal panels of same materials, construction, and finish as adjacent door assemblies.

2.08 FRAME ANCHORS

A. Jamb Anchors:

1. Masonry Type: Adjustable strap-and-stirrup or T-shaped anchors to suit frame size, not less than 0.042 inch thick, with corrugated or perforated straps not less than 2 inches wide by 10 inches long; or wire anchors not less than 0.177 inch thick.
2. Stud-Wall Type: Designed to engage stud, welded to back of frames; not less than 0.042 inch thick.
3. Postinstalled Expansion Type for In-Place Concrete or Masonry: Minimum 3/8-inch-diameter bolts with expansion shields or inserts. Provide pipe spacer from frame to wall, with throat reinforcement plate, welded to frame at each anchor location.

B. Floor Anchors: Formed from same material as frames, minimum thickness of 0.042 inch, and as follows:

1. Monolithic Concrete Slabs: Clip-type anchors, with two holes to receive fasteners.
2. Separate Topping Concrete Slabs: Adjustable-type anchors with extension clips, allowing not less than 2-inch height adjustment. Terminate bottom of frames at finish floor surface.

2.09 MATERIALS

A. Cold-Rolled Steel Sheet: ASTM A 1008/A 1008M, Commercial Steel (CS), Type B; suitable for exposed applications.

B. Hot-Rolled Steel Sheet: ASTM A 1011/A 1011M, Commercial Steel (CS), Type B; free of scale, pitting, or surface defects; pickled and oiled.

C. Metallic-Coated Steel Sheet: ASTM A 653/A 653M, Commercial Steel (CS), Type B.

D. Frame Anchors: ASTM A 879/A 879M, Commercial Steel (CS), 04Z coating designation; mill phosphatized.

1. For anchors built into exterior walls, steel sheet complying with ASTM A 1008/A 1008M or ASTM A 1011/A 1011M, hot-dip galvanized according to ASTM A 153/A 153M, Class B.

E. Inserts, Bolts, and Fasteners: Hot-dip galvanized according to ASTM A 153/A 153M.

F. Power-Actuated Fasteners in Concrete: Fastener system of type suitable for application indicated, fabricated from corrosion-resistant materials, with clips or other accessory devices for attaching hollow-metal frames of type indicated.

G. Grout: ASTM C 476, except with a maximum slump of 4 inches, as measured according to ASTM C 143/C 143M.

H. Mineral-Fiber Insulation: ASTM C 665, Type I (blankets without membrane facing); consisting of fibers manufactured from slag or rock wool; with maximum flame-spread and smoke-developed indexes of 25 and 50, respectively; passing ASTM E 136 for combustion characteristics.

I. Glazing: Comply with requirements in Division 08 Section "Glazing."

J. Bituminous Coating: Cold-applied asphalt mastic, compounded for 15-mil dry film thickness per coat. Provide inert-type noncorrosive compound free of asbestos fibers, sulfur components, and other deleterious impurities.

2.10 FABRICATION

A. Fabricate hollow-metal work to be rigid and free of defects, warp, or buckle. Accurately form metal to required sizes and profiles, with minimum radius for metal thickness. Where practical, fit and assemble units in manufacturer's plant. To ensure proper assembly at Project site, clearly identify work that cannot be permanently factory assembled before shipment.

B. Hollow-Metal Doors:

1. Steel-Stiffened Door Cores: Provide minimum thickness 0.026 inch, steel vertical stiffeners of same material as face sheets extending full-door height, with vertical webs spaced not more than 6 inches apart. Spot weld to face sheets no more than 5 inches o.c. Fill spaces between stiffeners with glass- or mineral-fiber insulation.
2. Fire Door Cores: As required to provide fire-protection ratings indicated.
3. Vertical Edges for Single-Acting Doors: Bevel edges 1/8 inch in 2 inches.
4. Top Edge Closures: Close top edges of doors with inverted closures, except provide flush closures at exterior doors of same material as face sheets.
5. Bottom Edge Closures: Close bottom edges of doors where required for attachment of weather stripping with end closures or channels of same material as face sheets.
6. Exterior Doors: Provide weep-hole openings in bottoms of exterior doors to permit moisture to escape. Seal joints in top edges of doors against water penetration.

C. Hollow-Metal Frames: Where frames are fabricated in sections due to shipping or handling limitations, provide alignment plates or angles at each joint, fabricated of same thickness metal as frames.

1. Sidelite Frames: Provide closed tubular members with no visible face seams or joints, fabricated from same material as door frame. Fasten members at crossings and to jambs by butt welding.

2. Provide countersunk, flat- or oval-head exposed screws and bolts for exposed fasteners unless otherwise indicated.
3. Grout Guards: Weld guards to frame at back of hardware mortises in frames to be grouted.
4. Floor Anchors: Weld anchors to bottoms of jambs with at least four spot welds per anchor; however, for slip-on drywall frames, provide anchor clips or countersunk holes at bottoms of jambs.
5. Jamb Anchors: Provide number and spacing of anchors as follows:

   a. Masonry Type: Locate anchors not more than 16 inches from top and bottom of frame. Space anchors not more than 32 inches o.c., to match coursing, and as follows:

      1) Two anchors per jamb up to 60 inches high.
      2) Three anchors per jamb from 60 to 90 inches high.
      3) Four anchors per jamb from 90 to 120 inches high.
      4) Four anchors per jamb plus one additional anchor per jamb for each 24 inches or fraction thereof above 120 inches high.

   b. Stud-Wall Type: Locate anchors not more than 18 inches from top and bottom of frame. Space anchors not more than 32 inches o.c. and as follows:

      1) Three anchors per jamb up to 60 inches high.
      2) Four anchors per jamb from 60 to 90 inches high.
      3) Five anchors per jamb from 90 to 96 inches high.
      4) Five anchors per jamb plus one additional anchor per jamb for each 24 inches or fraction thereof above 96 inches high.

   c. Postinstalled Expansion Type: Locate anchors not more than 6 inches from top and bottom of frame. Space anchors not more than 26 inches o.c.

6. Head Anchors: Two anchors per head for frames more than 42 inches wide and mounted in metal-stud partitions.
7. Door Silencers: Except on weather-stripped frames, drill stops to receive door silencers as follows. Keep holes clear during construction.

   a. Single-Door Frames: Drill stop in strike jamb to receive three door silencers.
   b. Double-Door Frames: Drill stop in head jamb to receive two door silencers.

D. Fabricate concealed stiffeners and edge channels from either cold- or hot-rolled steel sheet.

E. Hardware Preparation: Factory prepare hollow-metal work to receive templated mortised hardware; include cutouts, reinforcement, mortising, drilling, and tapping according to SDI A250.6, the Door Hardware Schedule, and templates.

1. Reinforce doors and frames to receive nontemplated, mortised, and surface-mounted door hardware.
2. Comply with applicable requirements in SDI A250.6 and BHMA A156.115 for preparation of hollow-metal work for hardware.

F. Stops and Moldings: Provide stops and moldings around glazed lites and louvers where indicated. Form corners of stops and moldings with mitered hairline joints.

1. Single Glazed Lites: Provide fixed stops and moldings welded on secure side of hollow-metal work.
2. Provide fixed frame moldings on outside of exterior and on secure side of interior doors and frames.
3. Provide loose stops and moldings on inside of hollow-metal work.
4. Coordinate rabbet width between fixed and removable stops with glazing and installation types indicated.

2.11 STEEL FINISHES

A. Prime Finish: Clean, pretreat, and apply manufacturer's standard primer.

1. Shop Primer: Manufacturer's standard, fast-curing, lead- and chromate-free primer complying with SDI A250.10; recommended by primer manufacturer for substrate; compatible with substrate and field-applied coatings despite prolonged exposure.

2.12 ACCESSORIES

A. Mullions and Transom Bars: Join to adjacent members by welding or rigid mechanical anchors.

B. Grout Guards: Formed from same material as frames, not less than 0.016 inch thick.

PART 3 - EXECUTION

3.01 EXAMINATION

A. Examine substrates, areas, and conditions, with Installer present, for compliance with requirements for installation tolerances and other conditions affecting performance of the Work.

B. Examine roughing-in for embedded and built-in anchors to verify actual locations before frame installation.

C. Proceed with installation only after unsatisfactory conditions have been corrected.

3.02 PREPARATION

A. Remove welded-in shipping spreaders installed at factory. Restore exposed finish by grinding, filling, and dressing, as required to make repaired area smooth, flush, and invisible on exposed faces.

B. Drill and tap doors and frames to receive nontemplated, mortised, and surface-mounted door hardware.

3.03 INSTALLATION

A. General: Install hollow-metal work plumb, rigid, properly aligned, and securely fastened in place. Comply with Drawings and manufacturer's written instructions.

B. Hollow-Metal Frames: Install hollow-metal frames for doors, transoms, sidelites, borrowed lites, and other openings, of size and profile indicated. Comply with SDI A250.11 or NAAMM-HMMA 840 as required by standards specified.

1. Set frames accurately in position; plumbed, aligned, and braced securely until permanent anchors are set. After wall construction is complete, remove temporary braces, leaving surfaces smooth and undamaged.

a. At fire-rated openings, install frames according to NFPA 80.
b. Where frames are fabricated in sections because of shipping or handling limitations, field splice at approved locations by welding face joint continuously; grind, fill, dress, and make splice smooth, flush, and invisible on exposed faces.
c. Install frames with removable stops located on secure side of opening.
d. Install door silencers in frames before grouting.
e. Remove temporary braces necessary for installation only after frames have been properly set and secured.
f. Check plumb, square, and twist of frames as walls are constructed. Shim as necessary to comply with installation tolerances.
g. Field apply bituminous coating to backs of frames that will be filled with grout containing antifreezing agents.

2. Floor Anchors: Provide floor anchors for each jamb and mullion that extends to floor, and secure with postinstalled expansion anchors.

a. Floor anchors may be set with power-actuated fasteners instead of postinstalled expansion anchors if so indicated and approved on Shop Drawings.

3. Metal-Stud Partitions: Solidly pack mineral-fiber insulation inside frames.
4. Masonry Walls: Coordinate installation of frames to allow for solidly filling space between frames and masonry with grout.
5. Installation Tolerances: Adjust hollow-metal door frames for squareness, alignment, twist, and plumb to the following tolerances:

a. Squareness: Plus or minus 1/16 inch, measured at door rabbet on a line 90 degrees from jamb perpendicular to frame head.
b. Alignment: Plus or minus 1/16 inch, measured at jambs on a horizontal line parallel to plane of wall.
c. Twist: Plus or minus 1/16 inch, measured at opposite face corners of jambs on parallel lines, and perpendicular to plane of wall.
d. Plumbness: Plus or minus 1/16 inch, measured at jambs at floor.

C. Hollow-Metal Doors: Fit hollow-metal doors accurately in frames, within clearances specified below. Shim as necessary.

1. Non-Fire-Rated Steel Doors:

    a. Between Door and Frame Jambs and Head: 1/8 inch plus or minus 1/32 inch.
    b. Between Edges of Pairs of Doors: 1/8 inch to 1/4 inch plus or minus 1/32 inch.
    c. At Bottom of Door: 5/8 inch plus or minus 1/32 inch.
    d. Between Door Face and Stop: 1/16 inch to 1/8 inch plus or minus 1/32 inch.

2. Fire-Rated Doors: Install doors with clearances according to NFPA 80.

D. Glazing: Comply with installation requirements in Division 08 Section “Glazing” and with hollow-metal manufacturer's written instructions.

1. Secure stops with countersunk flat- or oval-head machine screws spaced uniformly not more than 9 inches o.c. and not more than 2 inches o.c. from each corner.

3.04 ADJUSTING AND CLEANING

A. Final Adjustments: Check and readjust operating hardware items immediately before final inspection. Leave work in complete and proper operating condition. Remove and replace defective work, including hollow-metal work that is warped, bowed, or otherwise unacceptable.

B. Remove grout and other bonding material from hollow-metal work immediately after installation.

C. Prime-Coat Touchup: Immediately after erection, sand smooth rusted or damaged areas of prime coat and apply touchup of compatible air-drying, rust-inhibitive primer.

D. Metallic-Coated Surface Touchup: Clean abraded areas and repair with galvanizing repair paint according to manufacturer's written instructions.

END OF SECTION

SECTION 08 12 16
ALUMINUM FRAMES

PART 1 - GENERAL

1.01 SUMMARY

A. Section includes:

1. Interior aluminum doors, door frames, and glazing frames.

1.02 PREINSTALLATION MEETINGS

A. Preinstallation Conference: Conduct conference at Project site.

1.03 ACTION SUBMITTALS

A. Product Data:

1. Interior aluminum doors, door frames, and glazing frames.

B. Product Data Submittals: For each product.

1. Include construction details, material descriptions, dimensions of individual components and profiles, fire-resistance rating, and finishes.

C. Shop Drawings: For aluminum frames:

1. Include elevations, sections, and installation details for each wall-opening condition.
2. Include details for each frame type, including dimensioned profiles and metal thicknesses.
3. Include locations of reinforcements and preparations for hardware.
4. Include details of anchorages, joints, field splices, connections, and accessories.
5. Include details of moldings, removable stops, and glazing.

D. Samples: For each exposed product and for each color and texture specified, in manufacturer's standard sizes.

E. Product Schedule: For aluminum frames. Use same designations indicated on Drawings. Coordinate with door hardware schedule and glazing.

1.04 CLOSEOUT SUBMITTALS

A. Maintenance Data: For aluminum frames to include in maintenance manuals.

1.05 QUALITY ASSURANCE

A. Mockups: Build mockups to verify selections made under Sample submittals and to demonstrate aesthetic effects and to set quality standards for fabrication and installation.

1. Build mockup of each type of aluminum frame in typical wall area as shown on Drawings.
2. Approval of mockups does not constitute approval of deviations from the Contract Documents contained in mockups unless Architect specifically approves such deviations in writing.
3. Subject to compliance with requirements, approved mockups may become part of the completed Work if undisturbed at time of Substantial Completion.

PART 2 - PRODUCTS

2.01 ALUMINUM FRAMES

A. Manufacturers: Subject to compliance with requirements, available manufacturers offering products that may be incorporated into the Work include, but are not limited to the following:
1. Kawneer Company, Inc.
2. Modulex Products, Inc.
3. RACO Interior Products, Inc.
4. Versatrac.
5. Wilson Partitions; a division of Arcadia, Inc.

B. Source Limitations: Obtain aluminum frames from single source from single manufacturer.

2.02 PERFORMANCE REQUIREMENTS

A. Fire-Rated Frames: Frames for fire-rated door assemblies complying with NFPA 80 that are listed and labeled by a qualified testing agency, for fire-protection ratings indicated, based on testing at positive pressure according to NFPA 252.

1. Frames for Smoke- and Draft-Control Assemblies: Tested according to UL 1784 and installed in compliance with NFPA 105.

a. Air Leakage Rate: Maximum air leakage of 0.3 cfm/sq. ft. at the tested pressure differential of 0.3-inch wg.

2.03 INTERIOR ALUMINUM DOORS, DOOR FRAMES, AND GLAZING FRAMES

A. Match existing aluminum door frames.

B. Aluminum Framing: ASTM B221, with alloy and temper required to suit structural and finish requirements, and not less than 0.062 inch thick.

C. Door Frames: Extruded aluminum, reinforced for hinges, strikes, and closers.

D. Glazing Frames: Extruded aluminum, for indicated glass thickness.

E. Door Tracks: Extruded aluminum where exposed, sized to enclose sliding-door hardware, and in finish matching frame and trim finish.

F. Trim: Extruded aluminum, not less than 0.062 inch thick; removable, snap-in glazing stops and door stops, without exposed fasteners.

G. Doors:

1. As specified in Division 08 Section “Flush Wood Doors.”.

H. Frame and Trim Finish: Clear-anodized aluminum.

2.04 ACCESSORIES

A. Fasteners: Aluminum, nonmagnetic, stainless steel or other noncorrosive metal fasteners compatible with frames, stops, panels, reinforcement plates, hardware, anchors, and other items being fastened.

B. Door Silencers: Manufacturer's standard continuous mohair, wool pile, or vinyl seals in black color.

C. Smoke Seals: Intumescent strip or fire-rated gaskets in black.

D. Glazing Gaskets: Manufacturer's standard extruded or molded rubber or plastic, to accommodate glazing thickness indicated; in black.

E. Glass: As specified in Division 08 Section “Glazing.”

F. Door Hardware: As specified in Division 08 Section “Door Hardware.”

2.05 FABRICATION

A. Provide concealed corner reinforcements and alignment clips for accurately fitted hairline joints at butted and mitered connections.

B. Factory prepare aluminum frames to receive templated mortised hardware; include cutouts, reinforcements, mortising, drilling, and tapping, according to the Door Hardware Schedule and templates furnished as specified in Division 08 Section "Door Hardware."

1. Locate hardware cutouts and reinforcements as required by fire-rated label for assembly.

C. Fabricate frames for glazing with removable stops to allow glazing replacement without dismantling frame.

1. Locate removable stops on the inside of spaces accessed by keyed doors.

D. Fabricate components to allow secure installation without exposed fasteners.

2.06 GENERAL FINISH REQUIREMENTS

A. Appearance of Finished Work: Noticeable variations in same piece are not acceptable. Variations in appearance of adjoining components are acceptable if they are within the range of approved Samples and are assembled or installed to minimize contrast.

2.07 ALUMINUM FINISHES

A. Clear Anodic Finish: AAMA 611, AA-M12C22A31, Class II, 0.010 mm or thicker.

PART 3 - EXECUTION

3.01 EXAMINATION

A. Examine substrates, areas, and conditions, with Installer present, for compliance with requirements for installation tolerances and other conditions affecting performance of the Work.

B. Verify that wall thickness does not exceed standard tolerances allowed by throat size of indicated aluminum frame.

C. Proceed with installation only after unsatisfactory conditions have been corrected.

3.02 INSTALLATION

A. Install aluminum frames plumb, rigid, properly aligned, and securely fastened in place; according to manufacturer's written instructions.

1. At fire-protection-rated openings, install fire-rated frames according to NFPA 80 and NFPA 105.

B. Install frame components in the longest possible lengths with no piece less than 48 inches; components 72 inches or shorter must be one piece.

1. Fasten to suspended ceiling grid on maximum 48-inch centers, using sheet metal screws or other fasteners approved by frame manufacturer.
2. Use concealed installation clips to produce tightly fitted and aligned splices and connections.

3. Secure clips to extruded main-frame components and not to snap-in or trim members.
4. Do not leave screws or other fasteners exposed to view when installation is complete.

C. Glass: Install glass according to Division 08 Section “Glazing” and aluminum-frame manufacturer's written instructions.

3.03 ADJUSTING

A. Inspect installation, correct misalignments, and tighten loose connections.

B. Clean exposed frame surfaces promptly after installation, using cleaning methods recommended in writing by frame manufacturer and according to AAMA 609 and AAMA 610.

C. Touch Up: Repair marred frame surfaces to blend inconspicuously with adjacent unrepaired surface as viewed by Architect. Remove and replace frames with damaged finish that cannot be satisfactorily repaired.

END OF SECTION

SECTION 08 14 16
FLUSH WOOD DOORS

PART 1 - GENERAL

1.01 SUMMARY

A. Section includes:

1. Solid-core doors with plastic-laminate faces.

B. Related Sections include:

1. Division 08 Section “Glazing” for glass view panels in flush wood doors.

1.02 PREINSTALLATION MEETINGS

A. Preinstallation Conference: Conduct conference at Project site.

1.03 ACTION SUBMITTALS

A. Product Data: For each type of door. Include details of core and edge construction and trim for openings. Include factory-finishing specifications.

B. Sustainable Design Submittals:

1. Product Certificates: For regional materials, indicating location of material manufacturer and point of extraction, harvest, or recovery for each raw material. Include distance to Project and cost for each regional material.
2. Chain-of-Custody Certificates: For certified wood products. Include statement of costs.
3. Laboratory Test Reports: For adhesives, indicating compliance with requirements for low-emitting materials.
4. Laboratory Test Reports: For composite wood products, indicating compliance with requirements for low-emitting materials.

C. Shop Drawings: Indicate location, size, and hand of each door; elevation of each kind of door; construction details not covered in Product Data; and the following:

1. Dimensions and locations of blocking.
2. Dimensions and locations of mortises and holes for hardware.
3. Dimensions and locations of cutouts.
4. Undercuts.
5. Requirements for veneer matching.
6. Doors to be factory finished and finish requirements.
7. Fire-protection ratings for fire-rated doors.

D. Samples for Verification:

1. Factory finishes applied to actual door face materials, approximately 8 by 10 inches, for each material and finish. For each wood species and transparent finish, provide set of three Samples showing typical range of color and grain to be expected in finished Work.
2. Plastic laminate, 6 inches square, for each color, texture, and pattern selected.
3. Corner sections of doors, approximately 8 by 10 inches, with door faces and edges representing actual materials to be used.

   a. Provide Samples for each species of veneer and solid lumber required.
   b. Provide Samples for each color, texture, and pattern of plastic laminate required.
   c. Finish veneer-faced door Samples with same materials proposed for factory-finished doors.

4. Frames for light openings, 6 inches long, for each material, type, and finish required.

1.04 INFORMATIONAL SUBMITTALS

A. Sample Warranty: For special warranty.

1.05 QUALITY ASSURANCE

A. Manufacturer Qualifications: A qualified manufacturer that is certified for chain of custody by an FSC-accredited certification body.

B. Vendor Qualifications: A vendor that is certified for chain of custody by an FSC-accredited certification body.

1.06 DELIVERY, STORAGE, AND HANDLING

A. Comply with requirements of referenced standard and manufacturer's written instructions.

B. Package doors individually in cardboard cartons and wrap bundles of doors in plastic sheeting.

C. Mark each door on bottom rail with opening number used on Shop Drawings.

1.07 FIELD CONDITIONS

A. Environmental Limitations: Do not deliver or install doors until spaces are enclosed and weathertight, wet work in spaces is complete and dry, and HVAC system is operating and maintaining ambient temperature and humidity conditions at occupancy levels during remainder of construction period.

B. Environmental Limitations: Do not deliver or install doors until spaces are enclosed and weathertight, wet work in spaces is complete and dry, and HVAC system is operating and maintaining temperature between 60 and 90 deg F and relative humidity between 43 and 70 percent during remainder of construction period.

1.08 WARRANTY

A. A. Special Warranty: Manufacturer agrees to repair or replace doors that fail in materials or workmanship within specified warranty period.

1. Failures include, but are not limited to, the following:

a. Warping (bow, cup, or twist) more than 1/4 inch in a 42-by-84-inch section.
b. Telegraphing of core construction in face veneers exceeding 0.01 inch in a 3-inch span.

2. Warranty shall also include installation and finishing that may be required due to repair or replacement of defective doors.
3. Warranty Period for Solid-Core Interior Doors: Life of installation.

PART 2 - PRODUCTS

2.01 MANUFACTURERS

A. Manufacturers: Subject to compliance with requirements, available manufacturers offering products that may be incorporated into the Work include, but are not limited to the following:

1. Algoma Hardwoods, Inc.
2. Eggers Industries.
3. Marshfield DoorSystems, Inc.
4. VT Industries Inc.

2.02 FLUSH WOOD DOORS, GENERAL

A. Quality Standard: In addition to requirements specified, comply with AWI's, AWMAC's, and WI's “Architectural Woodwork Standards.”

1. Contract Documents contain selections chosen from options in quality standard and additional requirements beyond those of quality standard. Comply with those selections and requirements in addition to quality standard.

B. Certified Wood: Flush wood doors shall be certified as “FSC Pure”or “FSC Mixed Credit” according to FSC STD-01-001, “FSC Principles and Criteria for Forest Stewardship,” and to FSC STD-40-004, “FSC Standard for Chain of Custody Certification.”

C. Low-Emitting Materials: Fabricate doors with adhesives and composite wood products that comply with the testing and product requirements of the California Department of Health Services' “Standard Practice for the Testing of Volatile Organic Emissions from Various Sources Using Small-Scale Environmental Chambers.”

D. Fire-Rated Wood Doors: Doors complying with NFPA 80 that are listed and labeled by a qualified testing agency, for fire-protection ratings indicated, based on testing at positive pressure according to NFPA 252 or UL 10C.

1. Cores: Provide core specified or mineral core as needed to provide fire-protection rating indicated.
2. Edge Construction: Provide edge construction with intumescent seals concealed by outer stile. Comply with specified requirements for exposed edges.

E. Structural-Composite-Lumber-Core Doors:

1. Structural Composite Lumber: WDMA I.S.10.

   a. Screw Withdrawal, Face: 700 lbf.
   b. Screw Withdrawal, Edge: 400 lbf.

F. Mineral-Core Doors:

1. Core: Noncombustible mineral product complying with requirements of referenced quality standard and testing and inspecting agency for fire-protection rating indicated.
2. Blocking: Provide composite blocking with improved screw-holding capability approved for use in doors of fire-protection ratings indicated as needed to eliminate through-bolting hardware.
3. Edge Construction: At hinge stiles, provide laminated-edge construction with improved screw-holding capability and split resistance. Comply with specified requirements for exposed edges.

   a. Screw-Holding Capability: 550 lbf per WDMA T.M.-10.

2.03 PLASTIC-LAMINATE-FACED DOORS

A. Interior Solid-Core Doors:

1. Grade: Premium.
2. Plastic-Laminate Faces: High-pressure decorative laminates complying with NEMA LD 3, Grade HGS.
3. Colors, Patterns, and Finishes: As indicated or if not indicated as selected by Architect from laminate manufacturer's full range of products.
4. Exposed Verticaland Top Edges: Plastic laminate that matches faces, applied before faces.
5. Core: Either glued wood stave or structural composite lumber.
6. Construction: Five plies. Stiles and rails are bonded to core, then entire unit is abrasive planed before faces and crossbands are applied. Faces are bonded to core using a hot press.

2.04 LIGHT FRAMES AND LOUVERS

A. Wood Beads for Light Openings in Wood Doors:

1. Wood Species: Same species as door faces.
2. Profile: Flush quarter round.
3. At wood-core doors with 20-minute fire-protection ratings, provide wood beads and metal glazing clips approved for such use.

B. Wood-Veneered Beads for Light Openings in Fire-Rated Doors: Manufacturer's standard wood-veneered noncombustible beads matching veneer species of door faces and approved for use in doors of fire-protection rating indicated. Include concealed metal glazing clips where required for opening size and fire-protection rating indicated.

2.05 FABRICATION

A. Factory fit doors to suit frame-opening sizes indicated. Comply with clearance requirements of referenced quality standard for fitting unless otherwise indicated.

1. Comply with NFPA 80 requirements for fire-rated doors.

B. Factory machine doors for hardware that is not surface applied. Locate hardware to comply with DHI-WDHS-3. Comply with final hardware schedules, door frame Shop Drawings, BHMA-156.115-W, and hardware templates.

1. Coordinate with hardware mortises in metal frames to verify dimensions and alignment before factory machining.

C. Openings: Factory cut and trim openings through doors.

1. Light Openings: Trim openings with moldings of material and profile indicated.
2. Glazing: Factory install glazing in doors indicated to be factory finished. Comply with applicable requirements in Division 08 Section “Glazing.”
3. Fire-Protection-Rated Glazing: Factory install fire-protection-rated glazing in fire-rated doors indicated to be factory finished. Comply with applicable requirements in Division 08 Section “Fire-Resistant Glazing”

2.06 FACTORY FINISHING

A. General: Comply with referenced quality standard for factory finishing. Complete fabrication, including fitting doors for openings and machining for hardware that is not surface applied, before finishing.

1. Finish faces, all four edges, edges of cutouts, and mortises. Stains and fillers may be omitted on bottom edges, edges of cutouts, and mortises.

B. Factory finish doors.

PART 3 - EXECUTION

3.01 EXAMINATION

A. Examine doors and installed door frames, with Installer present, before hanging doors.

1. Verify that installed frames comply with indicated requirements for type, size, location, and swing characteristics and have been installed with level heads and plumb jambs.

2. Reject doors with defects.

B. Proceed with installation only after unsatisfactory conditions have been corrected.

3.02 INSTALLATION

A. Hardware: For installation, see Division 08 Section “Door Hardware.”

B. Installation Instructions: Install doors to comply with manufacturer's written instructions and referenced quality standard, and as indicated.

1. Install fire-rated doors according to NFPA 80.

C. Job-Fitted Doors: Align and fit doors in frames with uniform clearances and bevels as indicated below; do not trim stiles and rails in excess of limits set by manufacturer or permitted for fire-rated doors. Machine doors for hardware. Seal edges of doors, edges of cutouts, and mortises after fitting and machining.

1. Clearances: Provide 1/8 inch at heads, jambs, and between pairs of doors. Provide 1/8 inch from bottom of door to top of decorative floor finish or covering unless otherwise indicated. Where threshold is shown or scheduled, provide1/4 inch from bottom of door to top of threshold unless otherwise indicated.

a. Comply with NFPA 80 for fire-rated doors.
b. Bevel non-fire-rated doors 1/8 inch in 2 inches at lock and hinge edges.

2. Bevel fire-rated doors 1/8 inch in 2 inches at lock edge; trim stiles and rails only to extent permitted by labeling agency.

D. Factory-Fitted Doors: Align in frames for uniform clearance at each edge.

E. Factory-Finished Doors: Restore finish before installation if fitting or machining is required at Project site.

3.03 ADJUSTING

A. Operation: Rehang or replace doors that do not swing or operate freely.

B. Finished Doors: Replace doors that are damaged or that do not comply with requirements. Doors may be repaired or refinished if Work complies with requirements and shows no evidence of repair or refinishing.

END OF SECTION

SECTION 08 31 13
ACCESS DOORS AND FRAMES

PART 1 - GENERAL

1.01 SUMMARY

A. Section includes:

1. Access doors and frames.
2. Fire-rated access doors and frames.

1.02 ACTION SUBMITTALS

A. Product Data: For each type of product.

1. Include construction details materials, individual components and profiles, and finishes.

B. Shop Drawings:

1. Include plans, elevations, sections, details, and attachments to other work.
2. Detail fabrication and installation of access doors and frames for each type of substrate.

C. Samples: For each door face material, at least 3 by 5 inches in size, in specified finish.

D. Product Schedule: Provide complete access door and frame schedule, including types, locations, sizes, latching or locking provisions, and other data pertinent to installation.

PART 2 - PRODUCTS

2.01 PERFORMANCE REQUIREMENTS

A. Fire-Rated Access Doors and Frames: Assemblies complying with NFPA 80 that are listed and labeled by a qualified testing agency, for fire-protection ratings indicated, according to NFPA 252 or UL 10B.

2.02 ACCESS DOORS AND FRAMES FOR WALLS AND CEILINGS

A. Manufacturers: Subject to compliance with requirements, available manufacturers offering products that may be incorporated into the Work include, but are not limited to the following:

1. Acudor Products, Inc.
2. JL Industries, Inc.; a division of the Activar Construction Products Group.
3. Karp Associates, Inc.
4. Larsens Manufacturing Company.
5. MIFAB, Inc.
6. Milcor; Commercial Products Group of Hart & Cooley, Inc.
7. Nystrom, Inc.

B. Source Limitations: Obtain each type of access door and frame from single source from single manufacturer.

C. Flush Access Doors with Exposed Flanges for Typical Applications:

1. Assembly Description: Fabricate door to fit flush to frame. Provide manufacturer's standard-width exposed flange, proportional to door size.
2. Locations: Wall and ceiling.
3. Door Size: As required to access and operate valve or damper, but not less than 12 inches square.
4. Metallic-Coated Steel Sheet for Door: Nominal 0.064 inch, 16 gage.

   a. Finish: Factory prime.

5. Frame Material: Same material, thickness, and finish as door.
6. Hinges: Manufacturer's standard.
7. Hardware: Latch.

D. Flush Access Doors with Exposed Flanges for Applications at Restrooms, Toilets, Kitchens, and Similar Service Areas:

1. Assembly Description: Fabricate door to fit flush to frame. Provide manufacturer's standard-width exposed flange, proportional to door size.
2. Locations: Wall.
3. Door Size: As required to access and operate valve or damper, but not less than 12 inches square.
4. Stainless-Steel Sheet for Door: Nominal 0.062 inch, 16 gage.

   a. Finish: No. 4.

5. Frame Material: Same material, thickness, and finish as door.
6. Hinges: Manufacturer's standard.
7. Hardware: Latch.

E. Hardware For Non-Fire Rated Units:

1. Latch: Cam latch operated by spanner-head wrench.

2.03 MATERIALS

A. Metallic-Coated Steel Sheet: ASTM A653/A653M, Commercial Steel (CS), Type B; with minimum G60 or A60 metallic coating.

B. Stainless Steel Plate, Sheet, and Strip: ASTM A240/A240M or ASTM A666, Type 304. Remove tool and die marks and stretch lines, or blend into finish.

C. Frame Anchors: Same material as door face.

D. Inserts, Bolts, and Anchor Fasteners: Hot-dip galvanized steel according to ASTM A153/A153M or ASTM F2329.

2.04 FABRICATION

A. General: Provide access door and frame assemblies manufactured as integral units ready for installation.

B. Metal Surfaces: For metal surfaces exposed to view in the completed Work, provide materials with smooth, flat surfaces without blemishes. Do not use materials with exposed pitting, seam marks, roller marks, rolled trade names, or roughness.

C. Doors and Frames: Grind exposed welds smooth and flush with adjacent surfaces. Furnish mounting holes, attachment devices and fasteners of type required to secure access doors to types of supports indicated.

1. Provide mounting holes in frames for attachment of units to metal framing.
2. Provide mounting holes in frame for attachment of masonry anchors.

D. Latching Mechanisms: Furnish number required to hold doors in flush, smooth plane when closed.

2.05 FINISHES

A. Comply with NAAMM's "Metal Finishes Manual for Architectural and Metal Products" for recommendations for applying and designating finishes.

B. Protect mechanical finishes on exposed surfaces from damage by applying a strippable, temporary protective covering before shipping.

C. Appearance of Finished Work: Noticeable variations in same piece are not acceptable. Variations in appearance of adjoining components are acceptable if they are within the range of approved Samples and are assembled or installed to minimize contrast.

D. Stainless Steel Finishes:

1. Surface Preparation: Remove tool and die marks and stretch lines, or blend into finish.
2. Polished Finish: ASTM A480/A480M No. 4 finish. Grind and polish surfaces to produce uniform finish, free of cross scratches.

   a. Run grain of directional finishes with long dimension of each piece.
   b. When polishing is completed, passivate and rinse surfaces. Remove embedded foreign matter and leave surfaces chemically clean.

PART 3 - EXECUTION

3.01 EXAMINATION

A. Examine substrates for compliance with requirements for installation tolerances and other conditions affecting performance of the Work.

B. Proceed with installation only after unsatisfactory conditions have been corrected.

3.02 INSTALLATION

A. Comply with manufacturer's written instructions for installing access doors and frames.

B. Install doors flush with adjacent finish surfaces or recessed to receive finish material.

3.03 ADJUSTING

A. Adjust doors and hardware, after installation, for proper operation.

B. Remove and replace doors and frames that are warped, bowed, or otherwise damaged.

END OF SECTION

SECTION 08 41 13
ALUMINUM-FRAMED ENTRANCES AND STOREFRONTS

PART 1 - GENERAL

1.01 SUMMARY

A. Section includes:

1. Exterior and interior storefront framing.
2. Exterior storefront framing for punched openings.

B. Related Sections include:

1. Section 014339 “Mockups” for preconstruction laboratory mockup testing.
2. Section 084126 “All-Glass Entrances and Storefronts” for systems without aluminum support framing.

1.02 PREINSTALLATION MEETINGS

A. Preinstallation Conference: Conduct conference at Project site.

1.03 ACTION SUBMITTALS

A. Product Data: For each type of product.

1. Include construction details, material descriptions, dimensions of individual components and profiles, and finishes.

B. Shop Drawings: For aluminum-framed entrances and storefronts. Include plans, elevations, sections, full-size details, and attachments to other work.

1. Include details of provisions for assembly expansion and contraction and for draining moisture occurring within the assembly to the exterior.
2. Include full-size isometric details of each type of vertical-to-horizontal intersection of aluminum-framed entrances and storefronts, showing the following:

a. Joinery, including concealed welds.
b. Anchorage.
c. Expansion provisions.
d. Glazing.
e. Flashing and drainage.

3. Show connection to and continuity with adjacent thermal, weather, air, and vapor barriers.

C. Fabrication Sample: Of each vertical-to-horizontal intersection of assemblies, made from 12-inch lengths of full-size components and showing details of the following:

1. Joinery, including concealed welds.
2. Anchorage.

3. Expansion provisions.
4. Glazing.
5. Flashing and drainage.

D. Entrance Door Hardware Schedule: Prepared by or under supervision of supplier, detailing fabrication and assembly of entrance door hardware, as well as procedures and diagrams. Coordinate final entrance door hardware schedule with doors, frames, and related work to ensure proper size, thickness, hand, function, and finish of entrance door hardware.

1.04 INFORMATIONAL SUBMITTALS

A. Qualification Data: For Installer.

B. Test and Evaluation Reports:

1. Product Test Reports: For aluminum-framed entrances and storefronts, for tests performed by qualified testing agency.

C. Field Quality-Control Submittals:

1. Field quality-control reports.

D. Delegated design engineer qualifications.

E. Sample warranties.

1.05 CLOSEOUT SUBMITTALS

A. Operation and Maintenance Data: For aluminum-framed entrances and storefronts.

1.06 QUALITY ASSURANCE

A. Qualifications:

1. Installers: An entity that employs installers and supervisors who are trained and approved by manufacturer

B. Product Options: Information on Drawings and in Specifications establishes requirements for aesthetic effects and performance characteristics of assemblies. Aesthetic effects are indicated by dimensions, arrangements, alignment, and profiles of components and assemblies as they relate to sightlines, to one another, and to adjoining construction.

1. Do not change intended aesthetic effects, as judged solely by Architect, except with Architect's approval. If changes are proposed, submit comprehensive explanatory data to Architect for review.

C. Mockups: Provide aluminum-framed storefront framing and entrances, anchors, flashing, and accessories required to construct integrated exterior mockup specified in Division 01 Section "Mockups."

1.07 WARRANTY

A. Special Warranty: Manufacturer agrees to repair or replace components of aluminum-framed entrances and storefronts that do not comply with requirements or that fail in materials or workmanship within specified warranty period.

1. Failures include, but are not limited to, the following:

a. Structural failures, including, but not limited to, excessive deflection.
b. Noise or vibration created by wind and thermal and structural movements.
c. Deterioration of metals, metal finishes, and other materials beyond normal weathering.
d. Water penetration through fixed glazing and framing areas.
e. Failure of operating components.

2. Warranty Period: Five years from date of Substantial Completion.

PART 2 - PRODUCTS

2.01 PERFORMANCE REQUIREMENTS

A. General Performance: Comply with performance requirements specified, as determined by testing of aluminum-framed entrances and storefronts representing those indicated for this Project without failure due to defective manufacture, fabrication, installation, or other defects in construction.

1. Aluminum-framed entrances and storefronts shall withstand movements of supporting structure, including, but not limited to, twist, column shortening, long-term creep, and deflection from uniformly distributed and concentrated live loads.
2. Failure also includes the following:

a. Thermal stresses transferring to building structure.
b. Glass breakage.
c. Noise or vibration created by wind and thermal and structural movements.
d. Loosening or weakening of fasteners, attachments, and other components.
e. Failure of operating units.

B. Structural Loads:

1. Wind Loads: Determine positive and negative wind pressures according to ASCE/SEI 7 using wind speed criteria indicated on Structural Drawings but not less than 30 psf.

C. Deflection of Framing Members Supporting Glass: At design wind load, as follows:

1. Deflection Normal to Wall Plane: Limited to edge of glass in a direction perpendicular to glass plane not exceeding 1/175 of the glass edge length for each individual glazing lite or an amount that restricts edge deflection of individual glazing lites to 3/4 inch, whichever is less.
2. Deflection Parallel to Glazing Plane: Limited to amount not exceeding that which reduces glazing bite to less than 75 percent of design dimension and that which reduces edge

clearance between framing members and glazing or other fixed components to less than 1/8 inch.

D. Structural: Test in accordance with ASTM E330/E330M as follows:

1. When tested at positive and negative wind-load design pressures, storefront assemblies, including entrance doors, do not evidence deflection exceeding specified limits.
2. When tested at 150 percent of positive and negative wind-load design pressures, storefront assemblies, including entrance doors and anchorage, do not evidence material failures, structural distress, or permanent deformation of main framing members exceeding 0.2 percent of span.
3. Test Durations: As required by design wind velocity, but not less than 10 seconds.

E. Air Infiltration: Test according to ASTM E 283 for infiltration as follows:

1. Fixed Framing and Glass Area:

a. Maximum air leakage of 0.06 cfm/sq. ft. at a static-air-pressure differential of 6.24 lbf/sq. ft.

2. Entrance Doors:

a. Pair of Doors: Maximum air leakage of 1.0 cfm/sq. ft. at a static-air-pressure differential of 1.57 lbf/sq. ft.
b. Single Doors: Maximum air leakage of 0.5 cfm/sq. ft. at a static-air-pressure differential of 1.57 lbf/sq. ft.

F. Water Penetration under Static Pressure: Test according to ASTM E 331 as follows:

1. No evidence of water penetration through fixed glazing and framing areas when tested according to a minimum static-air-pressure differential of 20 percent of positive wind-load design pressure, but not less than 10 lbf/sq. ft.

G. Energy Performance: Certify and label energy performance according to NFRC as follows:

1. Thermal Transmittance (U-factor): Fixed glazing and framing areas shall have U-factor of not more than 0.45 Btu/sq. ft. x h x deg F as determined according to NFRC 100.
2. Solar Heat Gain Coefficient: Fixed glazing and framing areas shall have a solar heat gain coefficient of no greater than 0.25 as determined according to NFRC 200.

H. Windborne-Debris Impact Resistance: Passes ASTM E1886 missile-impact and cyclic-pressure tests in accordance with ASTM E1996 for Wind Zone 2 for basic protection.

2.02 STOREFRONT SYSTEMS

A. Basis of Design: Design is based on Kawneer North America; an Alcoa company, Trifab VersaGlaze 450 and 451T. Subject to compliance with requirements, provide named product or comparable product approved by Architect by one of the following:

1. Arcadia, Inc.
2. EFCO Corporation.

3. Kawneer North America, an Arconic company.
4. Oldcastle BuildingEnvelope (OBE); CRH Americas.
5. Trulite Glass & Aluminum Solutions, LLC.
6. Tubelite Inc.
7. U.S. Aluminum; a brand of C.R. Laurence.

B. Framing Members: Manufacturer's extruded- or formed-aluminum framing members of thickness required and reinforced as required to support imposed loads.

1. Exterior Framing Construction: Thermally broken.
2. Interior Vestibule Framing Construction: Nonthermal.
3. Glazing System: Retained mechanically with gaskets on four sides.
4. Glazing Plane: Front set.
5. Finish: Clear anodic finish.
6. Fabrication Method: Field-fabricated stick system.
7. Aluminum: Alloy and temper recommended by manufacturer for type of use and finish indicated.
8. Steel Reinforcement: As required by manufacturer.

C. Backer Plates: Manufacturer's standard, continuous backer plates for framing members, if not integral, where framing abuts adjacent construction.

D. Brackets and Reinforcements: Manufacturer's standard high-strength aluminum with nonstaining, nonferrous shims for aligning system components.

2.03 ENTRANCE DOOR SYSTEMS

A. Basis of Design: Design is based on Kawneer North America; an Alcoa company, 350 Standard Entrances. Subject to compliance with requirements, provide named product or comparable product approved by Architect by one of the following:

1. Arcadia, Inc.
2. EFCO Corporation.
3. Kawneer North America, an Arconic company.
4. Oldcastle BuildingEnvelope (OBE); CRH Americas.
5. Trulite Glass & Aluminum Solutions, LLC.
6. Tubelite Inc.
7. U.S. Aluminum; a brand of C.R. Laurence.

B. Entrance Doors: Manufacturer's standard glazed entrance doors for manual-swing or automatic operation.

1. Door Construction: 1-3/4-inch overall thickness, with minimum 0.125-inch- thick, extruded-aluminum tubular rail and stile members. Mechanically fasten corners with reinforcing brackets that are deeply penetrated and fillet welded or that incorporate concealed tie rods.
2. Door Design: Medium stile; 3-1/2-inch nominal width.
3. Glazing Stops and Gaskets: Square, snap-on, extruded-aluminum stops and preformed gaskets.
4. Finish: Match adjacent storefront framing finish.

2.04 ENTRANCE DOOR HARDWARE

A. General: Provide entrance door hardware and entrance door hardware sets indicated in door and frame schedule for each entrance door, to comply with requirements in this Section.

1. Entrance Door Hardware Sets: Provide quantity, item, size, finish or color indicated, and products complying with BHMA standard referenced.
2. Entrance Door Hardware: Hardware not specified in this Section is specified in Division 08 Section “Door Hardware.”

B. Designations: Requirements for design, grade, function, finish, quantity, size, and other distinctive qualities of each type of entrance door hardware are indicated in “Entrance Door Hardware Sets” Article. Products are identified by using entrance door hardware designations as follows:

1. References to BHMA Standards: Provide products complying with these standards and requirements for description, quality, and function.

C. Strikes: Provide strike with black-plastic dust box for each latch or lock bolt; fabricated for aluminum framing.

D. Weather Stripping: Manufacturer's standard replaceable components.

1. Compression Type: Made of ASTM D2000 molded neoprene or ASTM D2287 molded PVC.
2. Sliding Type: AAMA 701/702, made of wool, polypropylene, or nylon woven pile with nylon-fabric or aluminum-strip backing.

E. Weather Sweeps: Manufacturer's standard exterior-door bottom sweep with concealed fasteners on mounting strip.

F. Silencers: BHMA A156.16, Grade 1.

G. Thresholds: BHMA A156.21 raised thresholds beveled with a slope of not more than 1:2, with maximum height of 1/2 inch.

2.05 GLAZING

A. Glazing: Comply with Section 088000 “Glazing.”

B. Glazing Gaskets: Manufacturer's standard sealed-corner pressure-glazing system of black, resilient elastomeric glazing gaskets, setting blocks, and shims or spacers.

C. Glazing Sealants: As recommended by manufacturer.

2.06 MATERIALS

A. Steel Reinforcement:

1. Structural Shapes, Plates, and Bars: ASTM A36/A36M.
2. Cold-Rolled Sheet and Strip: ASTM A1008/A1008M.

3. Hot-Rolled Sheet and Strip: ASTM A1011/A1011M.

B. Aluminum: Alloy and temper recommended by manufacturer for type of use and finish indicated.

1. Sheet and Plate: ASTM B 209.
2. Extruded Bars, Rods, Profiles, and Tubes: ASTM B 221.
3. Extruded Structural Pipe and Tubes: ASTM B 429/B 429M.
4. Structural Profiles: ASTM B 308/B 308M.

2.07 ACCESSORIES

A. Fasteners and Accessories: Manufacturer's standard corrosion-resistant, nonstaining, nonbleeding fasteners and accessories compatible with adjacent materials.

1. Use self-locking devices where fasteners are subject to loosening or turning out from thermal and structural movements, wind loads, or vibration.
2. Reinforce members as required to receive fastener threads.
3. Use exposed fasteners with countersunk Phillips screw heads, finished to match framing system.

B. Anchors: Three-way adjustable anchors with minimum adjustment of 1 inch that accommodate fabrication and installation tolerances in material and finish compatible with adjoining materials and recommended by manufacturer.

1. Concrete and Masonry Inserts: Hot-dip galvanized cast-iron, malleable-iron, or steel inserts complying with ASTM A123/A123M or ASTM A153/A153M requirements.

C. Concealed Flashing: Dead-soft, 0.018-inch-thick stainless steel, complying with ASTM A240/A240M, of type recommended by manufacturer.

D. Bituminous Paint: Cold-applied asphalt-mastic paint containing no asbestos, formulated for 30-mil thickness per coat.

2.08 FABRICATION

A. Form or extrude aluminum shapes before finishing.

B. Weld in concealed locations to greatest extent possible to minimize distortion or discoloration of finish. Remove weld spatter and welding oxides from exposed surfaces by descaling or grinding.

C. Fabricate components that, when assembled, have the following characteristics:

1. Profiles that are sharp, straight, and free of defects or deformations.
2. Accurately fitted joints with ends coped or mitered.
3. Physical and thermal isolation of glazing from framing members.
4. Accommodations for thermal and mechanical movements of glazing and framing to maintain required glazing edge clearances.
5. Provisions for field replacement of glazing from interior.

6. Fasteners, anchors, and connection devices that are concealed from view to greatest extent possible.

D. Mechanically Glazed Framing Members: Fabricate for flush glazing without projecting stops.

E. Entrance Door Frames: Reinforce as required to support loads imposed by door operation and for installing entrance door hardware.

1. At interior and exterior doors, provide compression weather stripping at fixed stops.

F. Entrance Doors: Reinforce doors as required for installing entrance door hardware.

1. At pairs of exterior doors, provide sliding-type weather stripping retained in adjustable strip and mortised into door edge.
2. At exterior doors, provide weather sweeps applied to door bottoms.

G. Entrance Door Hardware Installation: Factory install entrance door hardware to the greatest extent possible. Cut, drill, and tap for factory-installed entrance door hardware before applying finishes.

H. After fabrication, clearly mark components to identify their locations in Project in accordance with Shop Drawings.

2.09 ALUMINUM FINISHES

A. Clear Anodic Finish: AAMA 611, AA-M12C22A41, Class I, 0.018 mm or thicker.

PART 3 - EXECUTION

3.01 EXAMINATION

A. Examine areas, with Installer present, for compliance with requirements for installation tolerances and other conditions affecting performance of the Work.

B. Proceed with installation only after unsatisfactory conditions have been corrected.

3.02 INSTALLATION

A. General:

1. Comply with manufacturer's written instructions.
2. Do not install damaged components.
3. Fit joints to produce hairline joints free of burrs and distortion.
4. Rigidly secure nonmovement joints.
5. Install anchors with separators and isolators to prevent metal corrosion and electrolytic deterioration and to prevent impeding movement of moving joints.
6. Seal perimeter and other joints watertight unless otherwise indicated.

B. Metal Protection:

1. Where aluminum is in contact with dissimilar metals, protect against galvanic action by painting contact surfaces with materials recommended by manufacturer for this purpose or by installing nonconductive spacers.
2. Where aluminum is in contact with concrete or masonry, protect against corrosion by painting contact surfaces with bituminous paint.

C. Set continuous sill members and flashing in full sealant bed, as specified in Section 079200 “Joint Sealants,” to produce weathertight installation.

D. Install joint filler behind sealant as recommended by sealant manufacturer.

E. Install components plumb and true in alignment with established lines and grades.

F. Install glazing as specified in Division 08 Section “Glazing.”

3.03 INSTALLATION OF ALUMINUM-FRAMED ENTRANCE DOORS

A. Install entrance doors to produce smooth operation and tight fit at contact points.

1. Exterior Doors: Install to produce weathertight enclosure and tight fit at weather stripping.
2. Field-Installed Entrance Door Hardware: Install surface-mounted entrance door hardware in accordance with entrance door hardware manufacturers' written instructions using concealed fasteners to greatest extent possible.

3.04 ERECTION TOLERANCES

A. Install aluminum-framed entrances and storefronts to comply with the following maximum tolerances:

1. Plumb: 1/8 inch in 10 feet; 1/4 inch in 40 feet.
2. Level: 1/8 inch in 20 feet; 1/4 inch in 40 feet.
3. Alignment:

    a. Where surfaces abut in line or are separated by reveal or protruding element up to 1/2 inch wide, limit offset from true alignment to 1/16 inch.
    b. Where surfaces are separated by reveal or protruding element from 1/2 to 1 inch wide, limit offset from true alignment to 1/8 inch.
    c. Where surfaces are separated by reveal or protruding element of 1 inch wide or more, limit offset from true alignment to 1/4 inch.

4. Location: Limit variation from plane to 1/8 inch in 12 feet; 1/2 inch over total length.

3.05 FIELD QUALITY CONTROL

A. Testing Agency: Engage a qualified testing agency to perform tests and inspections.

B. Tests and Inspections: Perform the following tests on representative areas of aluminum-framed entrances and storefronts.

1. Water-Spray Test: Before installation of interior finishes has begun, areas designated by Architect shall be tested in accordance with AAMA 501.2 and shall not evidence water penetration.

    a. Perform a minimum of two tests in areas as directed by Architect.

2. Air Leakage: ASTM E783 at 1.5 times the rate specified for laboratory testing in "Performance Requirements" Article but not more than 0.09 cfm/sq. ft. at a static-air-pressure differential of 1.57 lbf/sq. ft..

    a. Perform a minimum of two tests in areas as directed by Architect.

3. Water Penetration: ASTM E1105 at a minimum uniform and cyclic static-air-pressure differential of 0.67 times the static-air-pressure differential specified for laboratory testing in "Performance Requirements" Article, but not less than 6.24 lbf/sq. ft., and shall not evidence water penetration.
4. Egress Door Inspections: Inspect each aluminum-framed entrance door equipped with panic hardware, each aluminum-framed entrance door located in an exit enclosure, each electrically controlled aluminum-framed egress door, and each aluminum-framed entrance door equipped with special locking arrangements, in accordance with NFPA 101, Section 7.2.1.15.

C. Aluminum-framed entrances and storefronts will be considered defective if they do not pass tests and inspections.

D. Prepare test and inspection reports.

END OF SECTION

SECTION 08 44 13
GLAZED ALUMINUM CURTAIN WALLS

PART 1 - GENERAL

1.01 SUMMARY

A. Section includes:

1. Glazed aluminum curtain wall systems:

a. Two-sided, structural-sealant-glazed.

B. Related Sections include:

1. Section 014339 “Mockups” for preconstruction laboratory mockup testing.
2. Section 078443 “Joint Firestopping” perimeter fire-containment systems field installed with glazed aluminum curtain walls.
3. Section 079200 “Joint Sealants” for installation of joint sealants installed with glazed aluminum curtain walls and for sealants to the extent not specified in this Section.
4. Section 084113 “Aluminum-Framed Entrances and Storefronts” for aluminum entrances installed in glazed aluminum curtain wall systems
5. Section 088000 “Glazing” for curtain wall glazing.

1.02 PREINSTALLATION MEETINGS

A. Preinstallation Conference: Conduct conference at Project site.

1.03 ACTION SUBMITTALS

A. Product Data: For each type of product.

1. Include construction details, material descriptions, dimensions of individual components and profiles, and finishes.

B. Shop Drawings: For glazed aluminum curtain walls. Include plans, elevations, sections, full-size details, and attachments to other work.

1. Include details of provisions for assembly expansion and contraction and for draining moisture occurring within the assembly to the exterior.
2. Include full-size isometric details of each type of vertical-to-horizontal intersection of glazed aluminum curtain walls, showing the following:

a. Joinery, including concealed welds.
b. Anchorage.
c. Expansion provisions.
d. Glazing.
e. Flashing and drainage.

3. Show connection to and continuity with adjacent thermal, weather, air, and vapor barriers.

C. Fabrication Sample: Of each vertical-to-horizontal intersection of assemblies, made from 12-inch lengths of full-size components and showing details of the following:

1. Joinery, including concealed welds.
2. Anchorage.
3. Expansion provisions.
4. Glazing.
5. Flashing and drainage.

D. Delegated-Design Submittal: For glazed aluminum curtain walls indicated to comply with performance requirements and design criteria, including analysis data signed and sealed by the qualified professional engineer responsible for their preparation.

1.04 INFORMATIONAL SUBMITTALS

A. Qualification Data:

1. For Installer.
2. For professional engineer's experience with providing delegated-design engineering services of the kind indicated, including documentation that engineer is licensed in the state in which Project is located.

B. Certificates:

1. Energy Performance Certificates: For aluminum-framed entrances and storefronts, accessories, and components, from manufacturer.

   a. Basis for Certification: NFRC-certified energy performance values for each glazed aluminum curtain wall.

C. Sample warranties.

1.05 CLOSEOUT SUBMITTALS

A. Maintenance Data: For glazed aluminum curtain walls to include in maintenance manuals.

B. Maintenance Data for Structural Sealant: For structural-sealant-glazed curtain walls to include in maintenance manuals. Include ASTM C1401 recommendations for post-installation-phase quality-control program.

1.06 QUALITY ASSURANCE

A. Installer Qualifications: An entity that employs installers and supervisors who are trained and approved by manufacturer.

B. Product Options: Information on Drawings and in Specifications establishes requirements for aesthetic effects and performance characteristics of assemblies. Aesthetic effects are indicated by dimensions, arrangements, alignment, and profiles of components and assemblies as they relate to sightlines, to one another, and to adjoining construction.

1. Do not change intended aesthetic effects, as judged solely by Architect, except with Architect's approval. If changes are proposed, submit comprehensive explanatory data to Architect for review.

C. Structural-Sealant Glazing: Comply with ASTM C1401 for design and installation of structural-sealant-glazed curtain wall assemblies.

1.07 MOCKUPS

A. Mockups: Provide glazed aluminum curtain walls and accessories required to construct integrated exterior mockup specified in Division 01 Section "Mockups."

1.08 WARRANTY

A. Special Assembly Warranty: Manufacturer agrees to repair or replace components of glazed aluminum curtain wall that do not comply with requirements or that fail in materials or workmanship within specified warranty period.

1. Failures include, but are not limited to, the following:

a. Structural failures including, but not limited to, excessive deflection.
b. Noise or vibration created by wind and thermal and structural movements.
c. Deterioration of metals, metal finishes, and other materials beyond normal weathering.
d. Water penetration through fixed glazing and framing areas.
e. Failure of operating components.

2. Warranty Period: Five years from date of Substantial Completion.

PART 2 - PRODUCTS

2.01 PERFORMANCE REQUIREMENTS

A. Delegated Design: Engage a qualified professional engineer, as defined in Division 01 Section "Quality Requirements," to design glazed aluminum curtain walls.

B. General Performance: Comply with performance requirements specified, as determined by testing of glazed aluminum curtain walls representing those indicated for this Project without failure due to defective manufacture, fabrication, installation, or other defects in construction.

1. Glazed aluminum curtain walls shall withstand movements of supporting structure, including, but not limited to, story drift, twist, column shortening, long-term creep, and deflection from uniformly distributed and concentrated live loads.
2. Failure also includes the following:

a. Thermal stresses transferring to building structure.
b. Glass breakage.
c. Noise or vibration created by wind and thermal and structural movements.
d. Loosening or weakening of fasteners, attachments, and other components.
e. Failure of operating units.

C. Structural Loads:

1. Wind Loads: Determine positive and negative wind pressures according to ASCE/SEI 7 using wind speed criteria indicated on Structural Drawings.

D. Deflection of Framing Members Supporting Glass: At design wind load, as follows:

1. Deflection Normal to Wall Plane: Limited to edge of glass in a direction perpendicular to glass plane not exceeding 1/175 of the glass edge length for each individual glazing lite or an amount that restricts edge deflection of individual glazing lites to 3/4 inch, whichever is less.
2. Deflection Parallel to Glazing Plane: Limited to amount not exceeding that which reduces glazing bite to less than 75 percent of design dimension and that which reduces edge clearance between framing members and glazing or other fixed components to less than 1/8 inch.

E. Structural: Test in accordance with ASTM E330/E330M as follows:

1. When tested at positive and negative wind-load design pressures, assemblies do not evidence deflection exceeding specified limits.
2. When tested at 150 percent of positive and negative wind-load design pressures, assemblies, including anchorage, do not evidence material failures, structural distress, or permanent deformation of main framing members exceeding 0.2 percent of span.
3. Test Durations: As required by design wind velocity, but not less than 10 seconds.

F. Water Penetration under Static Pressure: Test in accordance with ASTM E331 as follows:

1. No evidence of water penetration through fixed glazing and framing areas when tested in accordance with a minimum static-air-pressure differential of 20 percent of positive wind-load design pressure, but not less than 10 lbf/sq. ft..

G. Energy Performance: Certified and labelled by manufacturer for energy performance as follows:

1. Thermal Transmittance (U-factor):

   a. Fixed Glazing and Framing Areas: U-factor for the system of not more than 0.46 Btu/sq. ft. x h x deg F as determined in accordance with NFRC 100.

2. Solar Heat Gain Coefficient (SHGC):

   a. Fixed Glazing and Framing Areas: SHGC for the system of not more than 0.25 as determined in accordance with NFRC 200.

H. Windborne-Debris Impact Resistance: Pass ASTM E1886 missile-impact and cyclic-pressure tests in accordance with ASTM E1996 for Wind Zone 2 for basic protection.

I. Thermal Movements: Allow for thermal movements resulting from ambient and surface temperature changes:

1. Temperature Change: 120 deg F, ambient; 180 deg F, material surfaces.

J. Structural-Sealant Joints:

1. Designed to carry gravity loads of glazing.

K. Structural Sealant: ASTM C1184. Capable of withstanding tensile and shear stresses imposed by structural-sealant-glazed curtain walls without failing adhesively or cohesively. When tested for preconstruction adhesion and compatibility, cohesive failure of sealant shall occur before adhesive failure.

1. Adhesive failure occurs when sealant pulls away from substrate cleanly, leaving no sealant material behind.
2. Cohesive failure occurs when sealant breaks or tears within itself but does not separate from each substrate, because sealant-to-substrate bond strength exceeds sealant's internal strength.

2.02 SOURCE LIMITATIONS

A. Obtain all components of curtain-wall system, including framing and accessories, from single manufacturer.

2.03 GLAZED ALUMINUM CURTAIN WALL SYSTEMS

A. Basis of Design: Design is based on Kawneer 1600 Wall System 2 Curtain Wall. Subject to compliance with requirements provide named product or comparable product approved by the Architect by one of the following:

1. Arcadia, Inc.
2. Kawneer North America, an Arconic company.
3. Oldcastle BuildingEnvelope (OBE); CRH Americas.
4. TRACO, a division of Kawneer.
5. Tubelite Inc.
6. Wausau Window and Wall Systems; Apogee Wausau Group, Inc.

B. Framing Members: Manufacturer's extruded- or formed-aluminum framing members of thickness required and reinforced as required to support imposed loads.

1. Construction: Thermally broken.
2. Glazing System: Retained mechanically with gaskets on two sides and structural sealant on two sides.
3. Glazing Plane: Front.
4. Finish: Clear anodic finish.
5. System: Stick system.
6. Aluminum: Alloy and temper recommended by manufacturer for type of use and finish indicated.
7. Steel Reinforcement: As required by manufacturer.

C. Pressure Caps: Manufacturer's standard aluminum components that mechanically retain glazing.

1. Include snap-on aluminum trim that conceals fasteners.

D. Brackets and Reinforcements: Manufacturer's standard high-strength aluminum with nonstaining, nonferrous shims for aligning system components.

2.04 GLAZING

A. Glazing: Comply with Section 088000 “Glazing.”

B. Glazing Gaskets: ASTM C509 or ASTM C864. Comply with Section 088000 “Glazing.”.

1. Color: Black.

C. Glazing Sealants: Comply with Section 088000 “Glazing.”

D. Structural Glazing Sealants: ASTM C1184, chemically curing silicone formulation that is compatible with system components with which it comes into contact, specifically formulated and tested for use as structural sealant and approved by structural-sealant manufacturer for use in curtain-wall assembly indicated.

1. Color: Black.

E. Weatherseal Sealants: ASTM C920 for Type S; Grade NS; Class 25; Uses NT, G, A, and O; chemically curing silicone formulation that is compatible with structural sealant and other system components with which it comes into contact; recommended by structural-sealant, weatherseal-sealant, and structural-sealant-glazed curtain-wall manufacturers for this use.

1. Color: Match structural sealant.

2.05 MATERIALS

A. Sheet and Plate: ASTM B209.

B. Extruded Bars, Rods, Profiles, and Tubes: ASTM B221.

C. Structural Profiles: ASTM B308/B308M.

D. Steel Reinforcement:

1. Structural Shapes, Plates, and Bars: ASTM A36/A36M.
2. Cold-Rolled Sheet and Strip: ASTM A1008/A1008M.
3. Hot-Rolled Sheet and Strip: ASTM A1011/A1011M.

E. Steel Reinforcement Primer: Manufacturer's standard zinc-rich, corrosion-resistant primer complying with SSPC-PS Guide No. 12.00; applied immediately after surface preparation and pretreatment. Select surface preparation methods in accordance with recommendations in SSPC-SP COM, and prepare surfaces in accordance with applicable SSPC standard.

2.06 ACCESSORIES

A. Fasteners and Accessories: Manufacturer's standard corrosion-resistant, nonstaining, nonbleeding fasteners and accessories compatible with adjacent materials.

1. Use self-locking devices where fasteners are subject to loosening or turning out from thermal and structural movements, wind loads, or vibration.
2. Reinforce members as required to receive fastener threads.
3. Use exposed fasteners with countersunk Phillips screw heads, finished to match framing system.

B. Anchors: Three-way adjustable anchors with minimum adjustment of 1 inch that accommodate fabrication and installation tolerances in material and finish compatible with adjoining materials and recommended by manufacturer.

1. Concrete and Masonry Inserts: Hot-dip galvanized cast-iron, malleable-iron, or steel inserts complying with ASTM A123/A123M or ASTM A153/A153M requirements.

C. Concealed Flashing: Dead-soft, 0.018-inch-thick stainless steel, ASTM A240/A240M of type recommended by manufacturer.

D. Bituminous Paint: Cold-applied asphalt-mastic paint containing no asbestos, formulated for 30-mil thickness per coat.

2.07 FABRICATION

A. Form or extrude aluminum shapes before finishing.

B. Weld in concealed locations to greatest extent possible to minimize distortion or discoloration of finish. Remove weld spatter and welding oxides from exposed surfaces by descaling or grinding.

C. Fabricate components that, when assembled, have the following characteristics:

1. Profiles that are sharp, straight, and free of defects or deformations.
2. Accurately fitted joints with ends coped or mitered.
3. Physical and thermal isolation of glazing from framing members.
4. Accommodations for thermal and mechanical movements of glazing and framing to maintain required glazing edge clearances.
5. Provisions for field replacement of glazing from interior for vision glass and exterior for spandrel glazing panels.
6. Fasteners, anchors, and connection devices that are concealed from view to greatest extent possible.

D. Factory-Assembled Frame Units:

1. Rigidly secure nonmovement joints.
2. Prepare surfaces that are in contact with structural sealant in accordance with sealant manufacturer's written instructions, to ensure compatibility and adhesion. Preparation includes, but is not limited to, cleaning and priming surfaces.
3. Seal joints watertight unless otherwise indicated.
4. Install glazing to comply with requirements in Section 088000 “Glazing.”
5. Install structural glazing.

a. Set glazing into framing in accordance with sealant manufacturer and framing manufacturer's written instructions and standard practice. Use a spacer or backer as recommended by manufacturer.
b. Set glazing with proper orientation so that coatings face exterior or interior as specified.
c. Apply structural silicone sealant to completely fill cavity, in accordance with sealant manufacturers written instructions with the framing and glazing in a fully supported position.
d. Brace or stiffen framing and glazing in such a manner to prevent undue stresses on the glass edge seal and structural joints or movement of the glazing, until sealant is fully cured in accordance with manufacturer's recommendations.
e. After structural sealant has completely cured, insert backer rod between lites of glass as recommended by sealant manufacturer.
f. Install weatherseal sealant to completely fill cavity, in accordance with sealant manufacturer's written instructions, to produce weatherproof joints.
g. Clean and protect glass as indicated in Section 088000 “Glazing.”
h. Retain bracing or stiffening until erected to prevent racking of units during transportation and erection.

E. After fabrication, clearly mark components to identify their locations in Project in accordance with Shop Drawings.

2.08 ALUMINUM FINISHES

A. Clear Anodic Finish: AAMA 611, AA-M12C22A41, Class I, 0.018 mm or thicker.

2.09 SOURCE QUALITY CONTROL

A. Structural Sealant: Perform quality-control procedures complying with ASTM C1401 recommendations, including, but not limited to, assembly material qualification procedures, sealant testing, and assembly fabrication reviews and checks.

PART 3 - EXECUTION

3.01 EXAMINATION

A. Examine areas, with Installer present, for compliance with requirements for installation tolerances and other conditions affecting performance of the Work.

B. Proceed with installation only after unsatisfactory conditions have been corrected.

3.02 INSTALLATION, GENERAL

A. Comply with manufacturer's written instructions.

B. Do not install damaged components.

C. Fit joints to produce hairline joints free of burrs and distortion.

D. Rigidly secure nonmovement joints.

E. Install anchors with separators and isolators to prevent metal corrosion and electrolytic deterioration and to prevent impeding movement of moving joints.

F. Where welding is required, weld components in concealed locations to minimize distortion or discoloration of finish. Protect glazing surfaces from welding.

G. Seal joints watertight unless otherwise indicated.

H. Metal Protection:

1. Where aluminum is in contact with dissimilar metals, protect against galvanic action by painting contact surfaces with primer, applying sealant or tape, or installing nonconductive spacers as recommended by manufacturer for this purpose.
2. Where aluminum is in contact with concrete or masonry, protect against corrosion by painting contact surfaces with bituminous paint.

I. Install components to drain water passing joints, condensation occurring within framing members, and moisture migrating within glazed aluminum curtain wall to exterior.

J. Install components plumb and true in alignment with established lines and grades.

3.03 INSTALLATION OF GLAZING

A. Install glazing as specified in Section 088000 “Glazing.”

3.04 INSTALLATION OF STRUCTURAL GLAZING

A. Prepare surfaces that will contact structural sealant in accordance with sealant manufacturer's written instructions, to ensure compatibility and adhesion. Preparation includes, but is not limited to, cleaning and priming surfaces.

B. Set glazing into framing in accordance with sealant manufacturer's and framing manufacturer's written instructions and standard practice. Use a spacer or backer as recommended by manufacturer.

C. Set glazing with proper orientation, so that coatings face exterior or interior as specified.

D. Hold glazing in place using temporary retainers of type and spacing recommended by manufacturer, until structural sealant joint has cured.

E. Apply structural sealant to completely fill cavity, in accordance with sealant manufacturer's and framing manufacturer's written instructions and in compliance with local codes.

F. Apply structural sealant at temperatures indicated by sealant manufacturer for type of sealant.

G. Allow structural sealant to cure in accordance with manufacturer's recommendations.

H. Clean and protect glass as indicated in Section 088000 “Glazing.”

3.05 INSTALLATION OF WEATHERSEAL SEALANT

A. After structural sealant has completely cured, remove temporary retainers and insert backer rod between lites of glass, as recommended by sealant manufacturer.

B. Install weatherseal sealant to completely fill cavity, in accordance with sealant manufacturer's written instructions, to produce weatherproof joints.

3.06 ERECTION TOLERANCES

A. Install glazed aluminum curtain walls to comply with the following maximum tolerances:

1. Plumb: 1/8 inch in 10 feet; 1/4 inch in 40 feet.
2. Level: 1/8 inch in 20 feet; 1/4 inch in 40 feet.
3. Alignment:

    a. Where surfaces abut in line or are separated by reveal or protruding element up to 1/2 inch wide, limit offset from true alignment to 1/16 inch.
    b. Where surfaces are separated by reveal or protruding element from 1/2 to 1 inch wide, limit offset from true alignment to 1/8 inch.
    c. Where surfaces are separated by reveal or protruding element of 1 inch wide or more, limit offset from true alignment to 1/4 inch.

4. Location: Limit variation from plane to 1/8 inch in 12 feet; 1/2 inch over total length.

3.07 FIELD QUALITY CONTROL

A. Testing Agency: Owner will engage a qualified testing agency to perform tests and inspections.

B. Field Quality-Control Testing: Perform the following test on representative areas of glazed aluminum curtain walls.

1. Water-Spray Test: Before installation of interior finishes has begun, areas designated by Architect shall be tested in accordance with AAMA 501.2 and shall not evidence water penetration.

    a. Perform a minimum of two tests in areas as directed by Architect.

2. Air Leakage: ASTM E783 at 1.5 times the rate specified for laboratory testing in “Performance Requirements” Article but not more than 0.09 cfm/sq. ft. at a static-air-pressure differential of 1.57 lbf/sq. ft..

    a. Perform a minimum of two tests in areas as directed by Architect.

3. Water Penetration: ASTM E1105 at a minimum uniform and cyclic static-air-pressure differential of 0.67 times the static-air-pressure differential specified for laboratory testing in “Performance Requirements” Article, but not less than 6.24 lbf/sq. ft., and shall not evidence water penetration.

    a. Perform a minimum of six tests in areas as directed by Architect with at least one test located on each elevation.

C. Structural-Sealant Adhesion: Test structural sealant in accordance with recommendations in ASTM C1401, Destructive Test Method A, “Hand Pull Tab (Destructive),” Appendix X2.

1. Test a minimum of two areas on each building facade.
2. Repair installation areas damaged by testing.

D. Glazed aluminum curtain walls and structural-sealant-glazed curtain walls will be considered defective if they do not pass tests and inspections.

END OF SECTION

SECTION 087100 - DOOR HARDWARE

PART 1 - GENERAL

1.1 SUMMARY

A. Section includes:

1. Mechanical door hardware for the following:

    a. Swinging wood, steel and aluminum doors.

2. Cylinders for door hardware specified in other Sections.
3. Electrified door hardware.

B. Products furnished, but not installed, under this Section include the products listed below. Coordinating and scheduling the purchase and delivery of these products remain requirements of this Section.

1. Swinging aluminum door hardware.

1.2 ACTION SUBMITTALS

A. Product Data: For each type of product indicated.

B. Shop Drawings: Details of electrified door hardware.

C. Samples: As requested.

D. Schedules shall be kept current with all changes to the project. If changes occur, project hardware schedules shall be maintained to reflect the changes as they are approved. Omitted items shall be deleted from openings, added and replaced items shall be included. Installation submittals shall be kept current as changes occur. Upon request, a complete updated hardware schedule shall be provided to the contractor. Supplemental submittals that include only the changed openings will not be acceptable.

E. Prior to final payment, provide a record copy of hardware schedules, including all revisions and updates. All openings shall be listed to reflect final installed configuration only.

F. Other Action Submittals:

1. Door Hardware Schedule: Prepared by or under the supervision of Installer, detailing fabrication and assembly of door hardware, as well as installation procedures and diagrams. Coordinate final door hardware schedule with doors, frames, and related work to ensure proper size, thickness, hand, function, and finish of door hardware.

a. Format: Use same scheduling sequence and format and use same door numbers as in the Contract Documents.
b. Content: Include the following information:

1) Identification number, location, hand, fire rating, size, and material of each door and frame.
2) Locations of each door hardware set, cross-referenced to Drawings on floor plans and to door and frame schedule.
3) Complete designations, including name and manufacturer, type, style, function, size, quantity, function, and finish of each door hardware product.
4) Description of electrified door hardware sequences of operation and interfaces with other building control systems.

2. Keying Schedule: Prepared by or under the supervision of Installer, detailing Owner's final keying instructions for locks.

1.3 QUALITY ASSURANCE

A. Supplier Qualifications: The hardware supplier must be a corporate member in good standing of The Door and Hardware Institute (DHI), employing at least one Architectural Hardware Consultant (AHC) who is currently participating in DHI’s continuing education program (CEP).

B. Installer Qualifications: Supplier of products and an employer of workers trained and approved by product manufacturers and an Architectural Hardware Consultant who is available during the course of the Work to consult with Contractor, Architect, and Owner about door hardware and keying.

C. Source Limitations: Provide electrified door hardware from same manufacturer as mechanical door hardware, unless otherwise indicated. Manufacturers that perform electrical modifications and that are listed by a testing and inspecting agency acceptable to authorities having jurisdiction are acceptable.

D. Fire-Rated Door Assemblies: Where fire-rated door assemblies are indicated, provide door hardware rated for use in assemblies complying with NFPA 80 that are listed and labeled by a qualified testing agency, for fire-protection ratings indicated, based on testing at positive pressure according to NFPA 252 or UL 10C, unless otherwise indicated. Provide positive latching and self closing, regardless if specified in sets.

E. Smoke- and Draft-Control Door Assemblies: Where smoke- and draft-control door assemblies are required, provide door hardware that meet requirements of assemblies tested according to UL 1784 and installed in compliance with NFPA 105.

1. Air Leakage Rate: Maximum air leakage of0.3 cfm/sq. ft. (3 cu. m per minute/sq. m) at the tested pressure differential of 0.3-inch wg (75 Pa) of water.

F. Electrified Door Hardware: Listed and labeled as defined in NFPA 70, Article 100, by a testing agency acceptable to authorities having jurisdiction.

G. Means of Egress Doors: Latches do not require more than 15 lbf (67 N) to release the latch. Locks do not require use of a key, tool, or special knowledge for operation.

H. Accessibility Requirements: For door hardware on doors in an accessible route, comply with ICC/ANSI A117.1.

1. Provide operating devices that do not require tight grasping, pinching, or twisting of the wrist and that operate with a force of not more than 5 lbf (22.2 N).
2. Comply with the following maximum opening-force requirements:

   a. Interior, Non-Fire-Rated Hinged Doors: 5 lbf (22.2 N) applied perpendicular to door.
   b. Sliding or Folding Doors: 5 lbf (22.2 N) applied parallel to door at latch.
   c. Fire Doors: Minimum opening force allowable by authorities having jurisdiction.

3. Bevel raised thresholds with a slope of not more than 1:2. Provide thresholds not more than 1/2 inch (13 mm) high.
4. Adjust door closer sweep periods so that, from an open position of 70 degrees, the door will take at least 3 seconds to move to a point 3 inches (75 mm) from the latch, measured to the leading edge of the door.

I. Keying Conference: Conduct conference at Project site to comply with requirements in Section 013100 "Project Management and Coordination."

J. Items of hardware not definitely specified herein but necessary for completion of the work shall be provided. Such items shall be of type and quality suitable to the service required and comparable to the adjacent hardware. Where size and shape of members is such as to prevent the use of types specified, hardware shall be furnished of suitable types having as nearly as practicable the same operation and quality as the type specified. Sizes shall be adequate for the service required.

K. Include such nuances as strike type, strike lip length, raised barrel hinges, mounting brackets, blade stop spacers, special templates, fasteners, shims, and coordination between conflicting products. All doors shall be provided with a stop.

1.4 DELIVERY, STORAGE, AND HANDLING

A. Deliver keys to manufacturer of key control system for subsequent delivery to Owner.

B. Deliver keys and permanent cores to Owner by registered mail or overnight package service.

1.5 WARRANTY

A. Special Warranty: Manufacturer's standard form in which manufacturer agrees to repair or replace components of door hardware that fail in materials or workmanship within specified warranty period.

1. Warranty Period: One year from date of Substantial Completion, unless otherwise indicated.

    a. Exit Devices: Three years from date of Substantial Completion.
    b. Manual Closers: Ten years from date of Substantial Completion.

B. Factory direct order number shall be provided for each shipment of locks, closers and exit devices with warranty, prior to final payment.

PART 2 - PRODUCTS

2.1 SCHEDULED DOOR HARDWARE

A. Provide door hardware for each door as scheduled in Part 3 "Door Hardware Schedule" Article to comply with requirements in this Section.

1. Door Hardware Sets: Provide quantity, item, size, finish or color indicated, and named manufacturers' products.
2. Sequence of Operation: Provide electrified door hardware function, sequence of operation, and interface with other building control systems indicated.

2.2 HINGES

A. Hinges: BHMA A156.1. Provide template-produced hinges.

1. Hinge quantity
    a. Provide 3 hinges per door up to and including 7’5” tall doors.
    b. Provide 1 additional hinge for each additional 2’6” of door height.
2. Hinge size:
    a. Provide 4.5” x 4.5” hinges unless otherwise noted.
3. Hinge weight:
    a. Provide standard weight hinges .134” thick on doors up to and including 36” wide doors.
    b. Provide heavy weight hinges .180” thick on doors over 36” wide.
4. Hinge base material:
    a. Exterior butt hinges: Non-ferrous with non-ferrous pin.
    b. Interior doors: Steel with steel pin.
5. Hinge Options:
    a. All hinges to be ball bearing.
    b. Provide non-removable pins (NRP) at all outswinging exterior doors.

6. Manufacturers: Subject to compliance with requirements, provide products by one of the following:

    a. Best.
    b. Hager.

c. McKinney

2.3 CONTINUOUS HINGES

A. Continuous Hinges: BHMA A156.26; minimum 0.120-inch- (3.0-mm-) thick, hinge leaves with minimum overall width of 4 inches (102 mm); fabricated to full height of door and frame and to template screw locations; with components finished after milling and drilling are complete.

B. Continuous, Gear-Type Hinges: Extruded-aluminum, pinless, geared hinge leaves joined by a continuous extruded-aluminum channel cap; with concealed, self-lubricating thrust bearings.

1. Manufacturers: Subject to compliance with requirements, provide products by one of the following:

a. Hager Companies.
b. Pemko.
c. Select Hinges.

2.4 MECHANICAL LOCKS AND LATCHES

A. Strikes: Provide manufacturer's standard strike for each lock bolt or latchbolt complying with requirements indicated for applicable lock or latch and with strike box and curved lip extended to protect frame; finished to match lock or latch.

1. Flat-Lip Strikes: For locks with three-piece antifriction latchbolts, as recommended by manufacturer.
2. Extra-Long-Lip Strikes: For locks used on aluminum frames and frames with applied wood casing trim.
3. Aluminum-Frame Strike Box: Manufacturer's special strike box fabricated for aluminum framing.
4. Rabbet Front and Strike: Provide on locksets for rabbeted meeting stiles.

B. Mortise Locks: BHMA A156.13; Series 1000, Grade 1.

1. Manufacturers: Subject to compliance with requirements, provide products by one of the following:
a. Corbin Russwin (ML2000 Series).
b. Sargent (8200 Series)
c. No substitutions will be permitted without architect’s written approval prior to bidding.

2.5 MANUAL FLUSH BOLTS

A. Manual Flush Bolts: BHMA A156.2; minimum 3/4-inch (19-mm) throw; designed for mortising into door edge.

1. Manufacturers: Subject to compliance with requirements, provide products by one of the following:

   a. Hager Companies.
   b. Trimco.
   c. Rockwood Manufacturing Company.

2.6 AUTOMATIC AND SELF-LATCHING FLUSH BOLTS

A. Automatic and Self-Latching Flush Bolts: BHMA A156.16; minimum 3/4-inch (19-mm) throw; designed for mortising into door edge.

1. Manufacturers: Subject to compliance with requirements, provide products by one of the following:

   a. Hager Companies.
   b. Trimco.
   c. Rockwood Manufacturing Company.

2.7 EXIT DEVICES AND AUXILIARY ITEMS

A. Exit Devices and Auxiliary Items: BHMA A156.3.

1. Manufacturers: Subject to compliance with requirements, provide products by one of the following:
   a. Corbin Russwin (ED4000/ED5000 Series).
   b. Sargent (80 Series).
   c. No substitutions will be permitted without architect’s written approval prior to bidding.

2.8 LOCK CYLINDERS

A. Lock Cylinders: Tumbler type, constructed from brass or bronze, stainless steel, or nickel silver.

1. Manufacturers: Subject to compliance with requirements, provide products by one of the following:
   a. Best. All cylinders to be Best Cormax cylinders.
   b. No substitutions will be permitted without architect’s written approval prior to bidding.

2.9 KEYING

A. Keying System: Factory registered, complying with guidelines in BHMA A156.28, Appendix A. Incorporate decisions made in keying conference.

1. Master Key System: Key all cylinders to a new master key system. Verify keying requirements with Owner.

B. Keys: Nickel silver.

1. Stamping: Permanently inscribe each key with a visual key control number and include the following notation:

   a. Notation: "DO NOT DUPLICATE."

2. Quantity: In addition to one extra key blank for each lock, provide the following:

   a. Cylinder Change Keys: Three.
   b. Master Keys: Five.
   c. Grand Master Keys: Five.

2.10 KEY CONTROL SYSTEM

A. Key Control Cabinet: BHMA A156.5; metal cabinet with baked-enamel finish; containing key-holding hooks, labels, 2 sets of key tags with self-locking key holders, key-gathering envelopes, and temporary and permanent markers; with key capacity of 150 percent of the number of locks.

1. Manufacturers: Subject to compliance with requirements, provide products by one of the following:

   a. Lund Equipment Co., Inc.

2. Wall-Mounted Cabinet: Cabinet with hinged-panel door equipped with key-holding panels and pin-tumbler cylinder door lock.

2.11 OPERATING TRIM

A. Operating Trim: BHMA A156.6; stainless steel, unless otherwise indicated.

1. Manufacturers: Subject to compliance with requirements, provide products by one of the following:

   a. Hager Companies.
   b. Rockwood Manufacturing Company.
   c. Trimco.

2.12 ACCESSORIES FOR PAIRS OF DOORS

A. Coordinators: BHMA A156.3; consisting of active-leaf, hold-open lever and inactive-leaf release trigger; fabricated from steel with nylon-coated strike plates; with built-in, adjustable safety release; and with internal override.

B. Carry-Open Bars: BHMA A156.3; prevent the inactive leaf from opening before the active leaf; provide polished brass or bronze carry-open bars with strike plate for inactive leaves of pairs of doors unless automatic or self-latching bolts are used.

C. Astragals: BHMA A156.22.

2.13 SURFACE CLOSERS.

A. Surface Closers: BHMA A156.4; rack-and-pinion hydraulic type with adjustable sweep and latch speeds controlled by key-operated valves and forged-steel main arm. Comply with manufacturer's written recommendations for size of door closers depending on size of door, exposure to weather, and anticipated frequency of use. Provide factory-sized closers, adjustable to meet field conditions and requirements for opening force.

1. Manufacturers: Subject to compliance with requirements, provide products by one of the following:
   a. Corbin Russwin (DC6000 series).
   b. LCN (4040XP series)
   c. Sargent (351 series).
   d. No substitutions will be permitted without architect’s written approval prior to bidding.

2.14 MECHANICAL STOPS AND HOLDERS

A. Wall- and Floor-Mounted Stops: BHMA A156.16; stainless steel base metal.

1. Manufacturers: Subject to compliance with requirements, provide products by one of the following:

   a. Hager Companies.
   b. Rockwood Manufacturing Company.
   c. Trimco.

2.15 OVERHEAD STOPS AND HOLDERS

A. Overhead Stops and Holders: BHMA A156.8.

1. Manufacturers: Subject to compliance with requirements, provide products by one of the following:

   a. ABH (Architectural Builders Hardware).
   b. Norton-Rixson.
   c. Sargent.

2.16 DOOR GASKETING

A. Door Gasketing: BHMA A156.22; air leakage not to exceed 0.50 cfm per foot (0.000774 cu. m/s per m) of crack length for gasketing other than for smoke control, as tested according to ASTM E 283; with resilient or flexible seal strips that are easily replaceable and readily available from stocks maintained by manufacturer.

1. Manufacturers: Subject to compliance with requirements, provide products by one of the following:

a. Hager Companies.
b. National Guard Products.
c. Pemko.

2.17 THRESHOLDS

A. Thresholds: BHMA A156.21; fabricated to full width of opening indicated.

1. Manufacturers: Subject to compliance with requirements, provide products by one of the following:

a. Hager Companies.
b. National Guard Products.
c. Pemko.

2.18 METAL PROTECTIVE TRIM UNITS

A. Metal Protective Trim Units: BHMA A156.6; fabricated from 0.050-inch- (1.3-mm-) thick stainless steel; with manufacturer's standard machine or self-tapping screw fasteners.

1. Manufacturers: Subject to compliance with requirements, provide products by one of the following:

a. Hager Companies.
b. Rockwood Manufacturing Company.
c. Trimco

2.19 AUXILIARY DOOR HARDWARE

A. Auxiliary Hardware: BHMA A156.16.

1. Manufacturers: Subject to compliance with requirements, provide products by one of the following:

a. Hager Companies.
b. Rockwood Manufacturing Company.
c. Trimco.

2.20 FABRICATION

A. Fasteners: Provide door hardware manufactured to comply with published templates prepared for machine, wood, and sheet metal screws. Provide screws that comply with commercially recognized industry standards for application intended, except aluminum fasteners are not permitted. Provide Phillips flat-head screws with finished heads to match surface of door hardware, unless otherwise indicated.

1. Concealed Fasteners: For door hardware units that are exposed when door is closed, except for units already specified with concealed fasteners. Do not use through bolts for installation where bolt head or nut on opposite face is exposed unless it is the only means of securely attaching the door hardware. Where through bolts are used on hollow door and frame construction, provide sleeves for each through bolt.
2. Fire-Rated Applications:

a. Wood or Machine Screws: For the following:

1) Hinges mortised to doors or frames; use threaded-to-the-head wood screws for wood doors and frames.
2) Strike plates to frames.
3) Closers to doors and frames.

b. Steel Through Bolts: For the following unless door blocking is provided:

1) Surface hinges to doors.
2) Closers to doors and frames.
3) Surface-mounted exit devices.

3. Spacers or Sex Bolts: For through bolting of hollow-metal doors.
4. Fasteners for Wood Doors: Comply with requirements in DHI WDHS.2, "Recommended Fasteners for Wood Doors."
5. Gasketing Fasteners: Provide noncorrosive fasteners for exterior applications and elsewhere as indicated.

2.21 FINISHES

A. Provide finishes complying with BHMA A156.18 as indicated in door hardware schedule.

B. Protect mechanical finishes on exposed surfaces from damage by applying a strippable, temporary protective covering before shipping.

PART 3 - EXECUTION

3.1 INSTALLATION

A. Steel Doors and Frames: For surface applied door hardware, drill and tap doors and frames according to ANSI/SDI A250.6.

B. Wood Doors: Comply with DHI WDHS.5 "Recommended Hardware Reinforcement Locations for Mineral Core Wood Flush Doors."

C. Mounting Heights: Mount door hardware units at heights to comply with the following unless otherwise indicated or required to comply with governing regulations.

1. Standard Steel Doors and Frames: ANSI/SDI A250.8.
2. Custom Steel Doors and Frames: HMMA 831.
3. Wood Doors: DHI WDHS.3, "Recommended Locations for Architectural Hardware for Wood Flush Doors."

D. Install each door hardware item to comply with manufacturer's written instructions. Where cutting and fitting are required to install door hardware onto or into surfaces that are later to be painted or finished in another way, coordinate removal, storage, and reinstallation of surface protective trim units with finishing work. Do not install surface-mounted items until finishes have been completed on substrates involved.

1. Set units level, plumb, and true to line and location. Adjust and reinforce attachment substrates as necessary for proper installation and operation.
2. Drill and countersink units that are not factory prepared for anchorage fasteners. Space fasteners and anchors according to industry standards.

E. Hinges: Install types and in quantities indicated in door hardware schedule but not fewer than the number recommended by manufacturer for application indicated or one hinge for every 30 inches (750 mm) of door height, whichever is more stringent, unless other equivalent means of support for door, such as spring hinges or pivots, are provided.

F. Intermediate Offset Pivots: Where offset pivots are indicated, provide intermediate offset pivots in quantities indicated in door hardware schedule but not fewer than one intermediate offset pivot per door and one additional intermediate offset pivot for every 30 inches (750 mm) of door height greater than 90 inches (2286 mm).

G. Key Control System: Tag keys and place them on markers and hooks in key control system cabinet, as determined by final keying schedule.

H. Boxed Power Supplies: Locate power supplies as indicated or, if not indicated, above accessible ceilings. Verify location with Architect.

1. Configuration: Provide one power supply for each door opening with electrified door hardware.

I. Thresholds: Set thresholds for exterior doors and other doors indicated in full bed of sealant complying with requirements specified in Section 079200 "Joint Sealants."

J. Stops: Provide floor stops for doors unless wall or other type stops are indicated in door hardware schedule. Do not mount floor stops where they will impede traffic.

K. Perimeter Gasketing: Apply to head and jamb, forming seal between door and frame.

L. Meeting Stile Gasketing: Fasten to meeting stiles, forming seal when doors are closed.

M. Door Bottoms: Apply to bottom of door, forming seal with threshold when door is closed.

N. Adjustment: Adjust and check each operating item of door hardware and each door to ensure proper operation or function of every unit. Replace units that cannot be adjusted to operate as intended. Adjust door control devices to compensate for final operation of heating and ventilating equipment and to comply with referenced accessibility requirements.

3.2 FIELD QUALITY CONTROL

A. Independent Architectural Hardware Consultant: Owner will engage a qualified independent Architectural Hardware Consultant to perform inspections and to prepare inspection reports.

3.3 DOOR HARDWARE SCHEDULE

SET 01

2	EA	CONTINUOUS HINGE	CFMSLFHD1 X EPT PREP	CLR	PEMKO
2	EA	POWER TRANSFER	CEPT-10	SP28	SECURITRON
1	EA	EXIT DEVICE	LC-55-56-AD8410 X 106	630	SARGENT
1	EA	EXIT DEVICE	55-56-AD8410	630	SARGENT
1	EA	I/C CYLINDER	AS REQUIRED	626	BEST
2	EA	PULL	RM3311 – 96”	630	ROCKWOOD
1	EA	AUTO OPERATOR	MAGIC FORCE (PAIR)	689	STANLEY
1	EA	ACTUATOR	S-4x4-3	630	WIKK
1	EA	VEST ACTUATOR	S-VEST-3LR	630	WIKK
1	EA	RELAY	10BR3X	---	BEA
2	EA	OVERHEAD STOP	1 SERIES	630	NORTON RIXSON
1	EA	POWER SUPPLY	3540	GRY	SARGENT
2	EA	SWEEP	315CN	AL	PEMKO
1	EA	THRESHOLD	252X3AFG	AL	PEMKO
2	EA	POSITION SWITCH	190-12	GRY	GRI

**CARD READER BY SECURITY SUPPLIER.
**SEALS BY DOOR SUPPLIER.

OPERATION: DOOR NORMALLY LOCKED AND CLOSED. VALID CARD READ ACTIVATES ELECTRIC LATCH RETRACTION EXIT DEVICES TO ALLOW ENTRY. VALID CARD READ ALSO ACTIVATES OUTSIDE AUTOMATIC OPERATOR ACTUATOR FOR OPTIONAL AUTOMATIC OPERATOR ENTRANCE. WHEN DOORS ARE PROGRAMMED TO BE OPEN DURING BUSINESSS HOURS, THE OUTSIDE ACTUATOR IS TO BE ACTIVE. FREE EGRESS IS ALWAYS ALLOWED.

SET 02

2	EA	CONTINUOUS HINGE	CFMSLFHD1	CLR	PEMKO

2	EA	PUSH	8893	630	SARGENT
2	EA	PULL	RM3311 – 96”	630	ROCKWOOD
1	EA	AUTO OPERATOR	MAGIC FORCE (PAIR)	689	STANLEY
1	EA	JAMB ACTUATOR	S-NAR-3	630	WIKK
2	EA	OVERHEAD STOP	1 SERIES	630	NORTON RIXSON

SET 03

	EA	HINGES	AS SPECIFIED	652	MCKINNEY
2	EA	POWER TRANSFER	CEPT-10	SP28	SECURITRON
1	EA	EXIT DEVICE	LC-12-55-56-NB8710 X 306	626	SARGENT
1	EA	EXIT DEVICE	LC-12-55-56-NB8710	626	SARGENT
1	EA	I/C CYLINDER	AS REQUIRED	626	BEST
2	EA	PULL	RM3311 – 96”	630	ROCKWOOD
2	EA	CLOSER	351 CPS	689	SARGENT
2	EA	KICKPLATE	10” X 1” LDW	630	ROCKWOOD
1	EA	POWER SUPPLY	3540	GRY	SARGENT
2	EA	POSITION SWITCH	190-12	GRY	GRI

**CARD READER BY SECURITY SUPPLIER.

OPERATION: DOOR NORMALLY LOCKED AND CLOSED. VALID CARD READ ACTIVATES ELECTRIC LATCH RETRACTION EXIT DEVICES TO ALLOW ENTRY. FREE EGRESS IS ALWAYS ALLOWED.

SET 04

	EA	HINGES	AS SPECIFIED	630	MCKINNEY
1	EA	EXIT DEVICE	8810	626	SARGENT
1	EA	CLOSER	351 P10	689	SARGENT
1	EA	OVERHEAD STOP	1 SERIES	630	NORTON RIXSON
1	EA	KICKPLATE	10” X 2” LDW	630	ROCKWOOD
1	SET	WEATHERSTRIP	2891CS	AL	PEMKO
1	EA	SWEEP	315CN	AL	PEMKO
1	EA	THRESHOLD	252X3AFG	AL	PEMKO

SET 05

	EA	HINGES	AS SPECIFIED	652	MCKINNEY
2	EA	DUMMY TRIM	8295 X LNMI	626	SARGENT
2	EA	OVERHEAD STOP	9 SERIES	630	NORTON RIXSON
2	EA	ROLLER LATCH	590	626	ROCKWOOD

SET 06

	EA	HINGES	AS SPECIFIED	652	MCKINNEY
1	EA	PASSAGE	8215 X ETMI	626	SARGENT
1	EA	CLOSER	351 UO	689	SARGENT
1	EA	WALL STOP	409	630	ROCKWOOD

1	EA	KICKPLATE	10" X 2" LDW	630	ROCKWOOD
1	SET	SEALS	S88BL	BLK	PEMKO

SET 07

	EA	HINGES	AS SPECIFIED	652	MCKINNEY
1	EA	STOREROOM LOCK	LC-8204 X LNMI	626	SARGENT
1	EA	I/C CYLINDER	AS REQUIRED	626	BEST
2	EA	CLOSER	351 CPS	689	SARGENT
1	SET	AUTO FLUSHBOLTS	2842/2942	630	ROCKWOOD
2	EA	MNTG BRACKETS	AS RQUIRED	628	ROCKWOOD
1	EA	COORDINATOR	2600 SERIES	628	ROCKWOOD
2	EA	KICKPLATE	10" X 1" LDW	630	ROCKWOOD
1	SET	SEALS	S88BL	BLK	PEMKO
1	SET	ASTRAGAL	305CN	AL	PEMKO

SET 08

	EA	HINGES	AS SPECIFIED	652	MCKINNEY
1	EA	STOREROOM LOCK	LC-8204 X LNMI	626	SARGENT
1	EA	I/C CYLINDER	AS REQUIRED	626	BEST
2	EA	CLOSER	351 CPSH	689	SARGENT
1	SET	AUTO FLUSHBOLTS	2842/2942	630	ROCKWOOD
2	EA	MNTG BRACKETS	AS RQUIRED	628	ROCKWOOD
1	EA	COORDINATOR	2600 SERIES	628	ROCKWOOD
2	EA	KICKPLATE	10" X 1" LDW	630	ROCKWOOD

SET 09

	EA	HINGES	AS SPECIFIED	630	MCKINNEY
1	EA	ELECTRIC HINGE	AS SPECIFIED X QC8	630	MCKINNEY
1	EA	DOOR HARNESS	QC-CXXX	---	MCKINNEY
1	EA	FRAME HARNESS	QC-C1500P	---	MCKINNEY
1	EA	ELECTRIC LOCK	LC-RX-8271 X LNMI	626	SARGENT
1	EA	I/C CYLINDER	AS REQUIRED	626	BEST
2	EA	CLOSER	351 CPSH	689	SARGENT
1	SET	AUTO FLUSHBOLTS	2842/2942	630	ROCKWOOD
2	EA	MNTG BRACKETS	AS RQUIRED	628	ROCKWOOD
1	EA	COORDINATOR	2600 SERIES	628	ROCKWOOD
2	EA	KICKPLATE	10" X 1" LDW	630	ROCKWOOD
1	SET	ASTRAGAL	BY DOOR SUPPLIER		
1	SET	WEATHERSTRIP	2891CS	AL	PEMKO
2	EA	SWEEP	315CN	AL	PEMKO
1	EA	THRESHOLD	252X3AFG	AL	PEMKO
1	EA	POWER SUPPLY	3540	GRY	SARGENT
2	EA	POSITION SWITCH	190-12	GRY	GRI

**CARD READER BY SECURITY SUPPLIER.

OPERATION: DOOR NORMALLY LOCKED AND CLOSED. VALID CARD READ UNLOCKS ELECTRIC LOCK TO ALLOW ENTRY. FREE EGRESS IS ALWAYS ALLOWED.

SET 10

	EA	HINGES	AS SPECIFIED	630	MCKINNEY
2	EA	EXIT DEVICE	MD8610	626	SARGENT
2	EA	CLOSER	351 P10	689	SARGENT
2	EA	OVERHEAD STOP	1 SERIES	630	NORTON RIXSON
2	EA	KICKPLATE	10" X 1" LDW	630	ROCKWOOD
1	SET	ASTRAGAL	305CN	AL	PEMKO
1	SET	WEATHERSTRIP	2891CS	AL	PEMKO
2	EA	SWEEP	315CN	AL	PEMKO
1	EA	THRESHOLD	252X3AFG	AL	PEMKO

SET 11

	EA	HINGES	AS SPECIFIED	652	MCKINNEY
1	EA	ELECTRIC HINGE	AS SPECIFIED X QC8	630	MCKINNEY
1	EA	DOOR HARNESS	QC-CXXX	---	MCKINNEY
1	EA	FRAME HARNESS	QC-C1500P	---	MCKINNEY
1	EA	EXIT DEVICE	LC-12-NB8775 X ETMI	626	SARGENT
1	EA	I/C CYLINDER	AS REQUIRED	626	BEST
1	EA	CLOSER	351 CPS	689	SARGENT
1	SET	SEALS	S88BL	BLK	PEMKO
1	EA	POWER SUPPLY	3540	GRY	SARGENT
1	EA	POSITION SWITCH	190-12	GRY	GRI

**CARD READER BY SECURITY SUPPLIER
**HARDWARE IS BASIS OF DESIGN. COORDINATE HARDWARE REQUIREMENTS WITH FIRE RATED DOOR SUPPLIER.

OPERATION: DOORS NORMALLY LOCKED AND CLOSED. VALID CARD READ UNLOCKS ELECTRIC LOCKING TRIM TO ALLOW ENTRY. ELECTRIC LOCKING TRIM TO FAIL SAFE UPON FIRE ALARM. FREE EGRESS IS ALWAYS ALLOWED.

SET 12

	EA	HINGES	AS SPECIFIED	652	MCKINNEY
2	EA	ELECTRIC HINGE	AS SPECIFIED X QC8	630	MCKINNEY
2	EA	DOOR HARNESS	QC-CXXX	---	MCKINNEY
2	EA	FRAME HARNESS	QC-C1500P	---	MCKINNEY
2	EA	EXIT DEVICE	LC-12-NB8774 X ETMI	626	SARGENT
2	EA	I/C CYLINDER	AS REQUIRED	626	BEST
2	EA	CLOSER	351 CPS	689	SARGENT
1	SET	SEALS	S88BL	BLK	PEMKO
1	SET	ASTRAGAL	305CN	AL	PEMKO
1	EA	POWER SUPPLY	3540	GRY	SARGENT
2	EA	POSITION SWITCH	190-12	GRY	GRI

**CARD READER BY SECURITY SUPPLIER
**HARDWARE IS BASIS OF DESIGN. COORDINATE HARDWARE REQUIREMENTS WITH FIRE RATED DOOR SUPPLIER.

OPERATION: DOORS NORMALLY LOCKED AND CLOSED. VALID CARD READ UNLOCKS ELECTRIC LOCKING TRIM TO ALLOW ENTRY. FREE EGRESS IS ALWAYS ALLOWED.

SET 13

1	EA	CONTINUOUS HINGE	CFMSLFHD1	CLR	PEMKO
1	EA	EXIT DEVICE	LC-AD8504	630	SARGENT
1	EA	I/C CYLINDER	AS REQUIRED	626	BEST
1	EA	PULL	BF158	630	ROCKWOOD
1	EA	CLOSER	351 P10	689	SARGENT
1	EA	OVERHEAD STOP	1 SERIES	630	NORTON RIXSON
1	EA	ELECTRIC STRIKE	9600	630	HES
1	EA	SWEEP	315CN	AL	PEMKO
1	EA	THRESHOLD	252X3AFG	AL	PEMKO
1	EA	POWER SUPPLY	3540	GRY	SARGENT
1	EA	POSITION SWITCH	190-12	GRY	GRI

**CARD READER AND REQUEST TO EXIT BY SECURITY SUPPLIER.
**SEALS BY DOOR SUPPLIER.

OPERATION: DOOR NORMALLY LOCKED AND CLOSED. VALID CARD READ RELEASES ELECTRIC STRIKE TO ALLOW ENTRY. UPON LOSS OF POWER OPENING TO REMAIN SECURED. FREE EGRESS IS ALWAYS ALLOWED.

SET 14

	EA	HINGES	AS SPECIFIED	652	MCKINNEY
1	EA	OFFICE LOCK	LC-8205 X ETMI	626	SARGENT
1	EA	I/C CYLINDER	AS REQUIRED	626	BEST
1	EA	WALL STOP	409	630	ROCKWOOD

SET 15

	EA	HINGES	AS SPECIFIED	652	MCKINNEY
1	EA	CLASSROOM LOCK	LC-8237 X ETMI	626	SARGENT
1	EA	I/C CYLINDER	AS REQUIRED	626	BEST
1	EA	WALL STOP	409	630	ROCKWOOD

SET 16

	EA	HINGES	AS SPECIFIED	652	MCKINNEY
1	EA	CLASSROOM LOCK	LC-8237 X ETMI	626	SARGENT
1	EA	I/C CYLINDER	AS REQUIRED	626	BEST
1	EA	CLOSER	351 H	689	SARGENT

1	EA	WALL STOP	409	630	ROCKWOOD
1	EA	KICKPLATE	10” X 2” LDW	630	ROCKWOOD

SET 17

	EA	HINGES	AS SPECIFIED	652	MCKINNEY
1	EA	PRIVACY	8265 X ETMI X V21	626	SARGENT
1	EA	CLOSER	351 UO	689	SARGENT
1	EA	WALL STOP	409	630	ROCKWOOD
1	EA	KICKPLATE	10” X 2” LDW	630	ROCKWOOD

SET 18

	EA	HINGES	AS SPECIFIED	630	MCKINNEY
1	EA	STOREROOM LOCK	LC-8204 X LNMI	626	SARGENT
1	EA	I/C CYLINDER	AS REQUIRED	626	BEST
1	EA	CLOSER	351 CPS	689	SARGENT
1	SET	WEATHERSTRIP	2891CS	AL	PEMKO
1	EA	SWEEP	315CN	AL	PEMKO
1	EA	THRESHOLD	252X3AFG	AL	PEMKO

SET 19

	EA	HINGES	AS SPECIFIED	630	MCKINNEY
1	EA	STOREROOM LOCK	LC-8204 X LNMI	626	SARGENT
1	EA	I/C CYLINDER	AS REQUIRED	626	BEST
1	EA	CLOSER	351 UO	689	SARGENT
1	EA	WALL STOP	409	630	ROCKWOOD
1	EA	KICKPLATE	10” X 2” LDW	630	ROCKWOOD

SET 20

	EA	HINGES	AS SPECIFIED	652	MCKINNEY
1	EA	CLASSROOM LOCK	LC-8237 X ETMI	626	SARGENT
1	EA	I/C CYLINDER	AS REQUIRED	626	BEST
2	EA	CLOSER	351 H	689	SARGENT
2	EA	OVERHEAD STOP	1 SERIES	630	NORTON RIXSON
1	SET	AUTO FLUSHBOLTS	2842/2942	630	ROCKWOOD
2	EA	MNTG BRACKETS	AS RQUIRED	628	ROCKWOOD
1	EA	COORDINATOR	2600 SERIES	628	ROCKWOOD
2	EA	KICKPLATE	10” X 1” LDW	630	ROCKWOOD

SET 21

	EA	HINGES	AS SPECIFIED	652	MCKINNEY
1	EA	STOREROOM LOCK	LC-8204 X LNMI	626	SARGENT
1	EA	I/C CYLINDER	AS REQUIRED	626	BEST
2	EA	CLOSER	351 CPS	689	SARGENT
1	SET	AUTO FLUSHBOLTS	2842/2942	630	ROCKWOOD

2	EA	MNTG BRACKETS	AS RQUIRED	628	ROCKWOOD
1	EA	COORDINATOR	2600 SERIES	628	ROCKWOOD
2	EA	KICKPLATE	10” X 1” LDW	630	ROCKWOOD

SET 22

	EA	HINGES	AS SPECIFIED	630	MCKINNEY
1	EA	EXIT DEVICE	LC-MD8646 X ETMI	630	SARGENT
1	EA	EXIT DEVICE	MD8610	630	SARGENT
1	EA	I/C CYLINDER	AS REQUIRED	626	BEST
2	EA	CLOSER	351 CPS	689	SARGENT
1	SET	ASTRAGAL	305CN	AL	PEMKO
1	SET	WEATHERSTRIP	2891CS	AL	PEMKO
2	EA	SWEEP	315CN	AL	PEMKO
1	EA	THRESHOLD	252X3AFG	AL	PEMKO

SET 23

	EA	HINGES	AS SPECIFIED	652	MCKINNEY
1	EA	EXIT DEVICE	8815 X ETMI	630	SARGENT
1	EA	CLOSER	351 UO	689	SARGENT
1	EA	WALL STOP	409	630	ROCKWOOD
1	EA	KICKPLATE	10” X 2” LDW	630	ROCKWOOD
1	SET	SEALS	S88BL	BLK	PEMKO

SET 24

	EA	HINGES	AS SPECIFIED	652	MCKINNEY
2	EA	ELECTRIC HINGE	AS SPECIFIED X QC8	630	MCKINNEY
2	EA	DOOR HARNESS	QC-CXXX	---	MCKINNEY
2	EA	FRAME HARNESS	QC-C1500P	---	MCKINNEY
2	EA	EXIT DEVICE	LC-12-NB8775 X ETMI	626	SARGENT
2	EA	I/C CYLINDER	AS REQUIRED	626	BEST
2	EA	CLOSER	351 CPS	689	SARGENT
1	SET	SEALS	S88BL	BLK	PEMKO
1	SET	ASTRAGAL	305CN	AL	PEMKO
1	EA	POWER SUPPLY	3540	GRY	SARGENT
2	EA	POSITION SWITCH	190-12	GRY	GRI

**CARD READER BY SECURITY SUPPLIER
**HARDWARE IS BASIS OF DESIGN. COORDINATE HARDWARE REQUIREMENTS WITH FIRE RATED DOOR SUPPLIER.

OPERATION: DOORS NORMALLY LOCKED AND CLOSED. VALID CARD READ UNLOCKS ELECTRIC LOCKING TRIM TO ALLOW ENTRY. ELECTRIC LOCKING TRIM TO FAIL SAFE UPON FIRE ALARM. FREE EGRESS IS ALWAYS ALLOWED.

SET 25

	EA	HINGES	AS SPECIFIED	652	MCKINNEY
1	EA	PUSH	70C	630	ROCKWOOD
1	EA	PULL	BF111 X 170C	630	ROCKWOOD
1	EA	CLOSER	351 UO	689	SARGENT
1	EA	WALL STOP	409	630	ROCKWOOD
1	EA	KICKPLATE	10” X 2” LDW	630	ROCKWOOD

SET 26

	EA	HINGES	AS SPECIFIED	652	MCKINNEY
1	EA	CLASSROOM LOCK	LC-8237 X ETMI	626	SARGENT
1	EA	I/C CYLINDER	AS REQUIRED	626	BEST
1	EA	OVERHEAD STOP	1 SERIES	630	NORTON RIXSON

SET 27

	EA	HINGES	AS SPECIFIED	652	MCKINNEY
1	EA	ELECTRIC HINGE	AS SPECIFIED X QC8	652	MCKINNEY
1	EA	DOOR HARNESS	QC-CXXX	---	MCKINNEY
1	EA	FRAME HARNESS	QC-C1500P	---	MCKINNEY
1	EA	ELECTRIC LOCK	LC-RX-8271 X LNMI	626	SARGENT
1	EA	I/C CYLINDER	AS REQUIRED	626	BEST
2	EA	CLOSER	351 CPS	689	SARGENT
1	SET	AUTO FLUSHBOLTS	2842/2942	630	ROCKWOOD
2	EA	MNTG BRACKETS	AS RQUIRED	628	ROCKWOOD
1	EA	COORDINATOR	2600 SERIES	628	ROCKWOOD
2	EA	KICKPLATE	10” X 1” LDW	630	ROCKWOOD
1	EA	POWER SUPPLY	3540	GRY	SARGENT
2	EA	POSITION SWITCH	190-12	GRY	GRI

**CARD READER BY SECURITY SUPPLIER.

OPERATION: DOOR NORMALLY LOCKED AND CLOSED. VALID CARD READ UNLOCKS ELECTRIC LOCK TO ALLOW ENTRY. FREE EGRESS IS ALWAYS ALLOWED.

SET 28

	EA	HINGES	AS SPECIFIED	630	MCKINNEY
1	EA	STOREROOM LOCK	LC-8204 X LNMI	626	SARGENT
1	EA	I/C CYLINDER	AS REQUIRED	626	BEST
1	EA	CLOSER	351 UO	689	SARGENT
1	EA	OVERHEAD STOP	1 SERIES	630	NORTON RIXSON
1	EA	KICKPLATE	10” X 2” LDW	630	ROCKWOOD
1	SET	SEALS	S88BL	BLK	PEMKO

SET 29

	EA	HINGES	AS SPECIFIED	652	MCKINNEY
1	EA	ELECTRIC HINGE	AS SPECIFIED X QC8	652	MCKINNEY

1	EA	DOOR HARNESS	QC-CXXX	---	MCKINNEY
1	EA	FRAME HARNESS	QC-C1500P	---	MCKINNEY
1	EA	ELECTRIC LOCK	LC-RX-8270 X LNMI	626	SARGENT
1	EA	I/C CYLINDER	AS REQUIRED	626	BEST
1	EA	CLOSER	351	689	SARGENT
1	EA	WALL STOP	409	630	ROCKWOOD
1	SET	SEALS	S88BL	BLK	PEMKO
1	EA	POWER SUPPLY	3540	GRY	SARGENT
1	EA	POSITION SWITCH	190-12	GRY	GRI

**CARD READER BY SECURITY SUPPLIER
**HARDWARE IS BASIS OF DESIGN. COORDINATE HARDWARE REQUIREMENTS WITH FIRE RATED DOOR SUPPLIER.

OPERATION: DOORS NORMALLY LOCKED AND CLOSED. VALID CARD READ UNLOCKS ELECTRIC LOCK TO ALLOW ENTRY. ELECTRIC LOCKING TRIM TO FAIL SAFE UPON FIRE ALARM. FREE EGRESS IS ALWAYS ALLOWED.

SET 30

	EA	HINGES	AS SPECIFIED	652	MCKINNEY
1	EA	ELECTRIC HINGE	AS SPECIFIED X QC8	652	MCKINNEY
1	EA	DOOR HARNESS	QC-CXXX	---	MCKINNEY
1	EA	FRAME HARNESS	QC-C1500P	---	MCKINNEY
1	EA	ELECTRIC LOCK	LC-RX-8270 X LNMI	626	SARGENT
1	EA	I/C CYLINDER	AS REQUIRED	626	BEST
2	EA	CLOSER	351 CPS	689	SARGENT
1	SET	AUTO FLUSHBOLTS	2842/2942	630	ROCKWOOD
2	EA	MNTG BRACKETS	AS RQUIRED	628	ROCKWOOD
1	EA	COORDINATOR	2600 SERIES	628	ROCKWOOD
1	SET	SEALS	S88BL	BLK	PEMKO
1	SET	ASTRAGAL	305CN	AL	PEMKO
1	EA	POWER SUPPLY	3540	GRY	SARGENT
2	EA	POSITION SWITCH	190-12	GRY	GRI

**CARD READER BY SECURITY SUPPLIER
**HARDWARE IS BASIS OF DESIGN. COORDINATE HARDWARE REQUIREMENTS WITH FIRE RATED DOOR SUPPLIER.

OPERATION: DOORS NORMALLY LOCKED AND CLOSED. VALID CARD READ UNLOCKS ELECTRIC LOCK TO ALLOW ENTRY. ELECTRIC LOCKING TRIM TO FAIL SAFE UPON FIRE ALARM. FREE EGRESS IS ALWAYS ALLOWED.

SET 31

	EA	HINGES	AS SPECIFIED	652	MCKINNEY
1	EA	CLASSROOM LOCK	LC-8237 X ETMI	626	SARGENT
1	EA	I/C CYLINDER	AS REQUIRED	626	BEST
2	EA	CLOSER	351	689	SARGENT

2	EA	OVERHEAD STOP	1 SERIES	630	NORTON RIXSON
1	SET	AUTO FLUSHBOLTS	2842/2942	630	ROCKWOOD
2	EA	MNTG BRACKETS	AS RQUIRED	628	ROCKWOOD
1	EA	COORDINATOR	2600 SERIES	628	ROCKWOOD
1	SET	SEALS	S88BL	BLK	PEMKO
1	SET	ASTRAGAL	305CN	AL	PEMKO

**HARDWARE IS BASIS OF DESIGN. COORDINATE HARDWARE REQUIREMENTS WITH FIRE RATED DOOR SUPPLIER.

SET 32

	EA	HINGES	AS SPECIFIED	652	MCKINNEY
1	EA	ELECTRIC HINGE	AS SPECIFIED X QC8	652	MCKINNEY
1	EA	DOOR HARNESS	QC-CXXX	---	MCKINNEY
1	EA	FRAME HARNESS	QC-C1500P	---	MCKINNEY
1	EA	ELECTRIC LOCK	LC-RX-8271 X LNMI	626	SARGENT
1	EA	I/C CYLINDER	AS REQUIRED	626	BEST
1	EA	CLOSER	351	689	SARGENT
1	EA	WALL STOP	409	630	ROCKWOOD
1	EA	KICKPLATE	10” X 2” LDW	630	ROCKWOOD
1	EA	POWER SUPPLY	3540	GRY	SARGENT
1	EA	POSITION SWITCH	190-12	GRY	GRI

**CARD READER BY SECURITY SUPPLIER
**CARD READER IS ON WORKROOM SIDE OF DOOR.

OPERATION: DOORS NORMALLY LOCKED AND CLOSED. VALID CARD READ UNLOCKS ELECTRIC LOCK TO ALLOW ENTRY. FREE EGRESS IS ALWAYS ALLOWED.

SET 33
HARDWARE BY DOOR SUPPLIER

SET 34

	EA	HINGES	AS SPECIFIED	652	MCKINNEY
1	EA	PASSAGE	8215 X ETMI	626	SARGENT
1	EA	WALL STOP	409	630	ROCKWOOD

SET 35

	EA	HINGES	AS SPECIFIED	630	MCKINNEY
1	EA	STOREROOM LOCK	LC-8204 X LNMI	626	SARGENT
1	EA	I/C CYLINDER	AS REQUIRED	626	BEST
1	EA	CLOSER	351 CPS	689	SARGENT
1	EA	KICKPLATE	10” X 2” LDW	630	ROCKWOOD

SET 36

	EA	HINGES	AS SPECIFIED	652	MCKINNEY
1	EA	PRIVACY	8265 X ETMI X V21	626	SARGENT
1	EA	CLOSER	351 UO	689	SARGENT
2	EA	OVERHEAD STOP	1 SERIES	630	NORTON RIXSON
1	EA	KICKPLATE	10” X 2” LDW	630	ROCKWOOD

SET 37

	EA	HINGES	AS SPECIFIED	652	MCKINNEY
1	EA	CLASSROOM LOCK	LC-8237 X ETMI	626	SARGENT
1	EA	I/C CYLINDER	AS REQUIRED	626	BEST
2	EA	CLOSER	351 CPSH	689	SARGENT
1	SET	AUTO FLUSHBOLTS	2842/2942	630	ROCKWOOD
2	EA	MNTG BRACKETS	AS RQUIRED	628	ROCKWOOD
1	EA	COORDINATOR	2600 SERIES	628	ROCKWOOD
2	EA	KICKPLATE	10” X 1” LDW	630	ROCKWOOD

END OF SECTION

SECTION 08 80 00
GLAZING

PART 1 - GENERAL

1.01 SUMMARY

A. Section includes:

1. Glazing for:

a. Doors.
b. Interior borrowed lites.
c. Storefront framing.
d. Curtain Wall Framing.

2. Glazing products include:

a. Monolithic uncoated glass.
b. Insulated glazing units with low-e coating.

3. Glazing sealants and accessories.

B. Related Sections include Division 08 Section “Sectional Doors” for impact-resistant polycarbonate glazing installed in sectional doors.

1.02 COORDINATION

A. Coordinate glazing channel dimensions to provide necessary bite on glass, minimum edge and face clearances, and adequate sealant thicknesses, with reasonable tolerances.

1.03 PREINSTALLATION MEETINGS

A. Preinstallation Conference: Conduct conference at Project site.

1. Review and finalize construction schedule and verify availability of materials, Installer's personnel, equipment, and facilities needed to make progress and avoid delays.
2. Review temporary protection requirements for glazing during and after installation.

1.04 ACTION SUBMITTALS

A. Product Data: For each type of product.

B. Glass Samples: For each type of glass product other than clear monolithic vision glass; 12 inches square.

C. Glazing Schedule: List glass types and thicknesses for each size opening and location. Use same designations indicated on Drawings.

1.05 INFORMATIONAL SUBMITTALS

A. Qualification Data: For manufacturers of insulating-glass units with sputter-coated, low-E coatings.

B. Product Certificates: For exterior glazing units.

C. Sample Warranties: For special warranties.

1.06 QUALITY ASSURANCE

A. Fabricator Qualifications for Insulating-Glass Units with Sputter-Coated, Low-E Coatings: A qualified insulating-glass fabricator who is approved and certified by coated-glass manufacturer.

B. Mockups: Provide glazing units, glazing materials, and accessories required to construct integrated exterior mockup specified in Division 01 Section "Mockups."

1.07 DELIVERY, STORAGE, AND HANDLING

A. Protect glazing materials according to manufacturer's written instructions. Prevent damage to glass and glazing materials from condensation, temperature changes, direct exposure to sun, or other causes.

B. Comply with insulating-glass manufacturer's written instructions for venting and sealing units to avoid hermetic seal ruptures due to altitude change.

1.08 FIELD CONDITIONS

A. Environmental Limitations: Do not proceed with glazing when ambient and substrate temperature conditions are outside limits permitted by glazing material manufacturers and when glazing channel substrates are wet from rain, frost, condensation, or other causes.

1. Do not install glazing sealants when ambient and substrate temperature conditions are outside limits permitted by sealant manufacturer or are below 40 deg F.

1.09 WARRANTY

A. Manufacturer's Special Warranty for Coated-Glass Products: Manufacturer agrees to replace coated-glass units that deteriorate within specified warranty period. Deterioration of coated glass is defined as defects developed from normal use that are not attributed to glass breakage or to maintaining and cleaning coated glass contrary to manufacturer's written instructions. Defects include peeling, cracking, and other indications of deterioration in coating.

1. Warranty Period: 10 years from date of Substantial Completion.

B. Manufacturer's Special Warranty for Insulating Glass: Manufacturer agrees to replace insulating-glass units that deteriorate within specified warranty period. Deterioration of insulating glass is defined as failure of hermetic seal under normal use that is not attributed to glass breakage or to maintaining and cleaning insulating glass contrary to manufacturer's written instructions. Evidence of failure is the obstruction of vision by dust, moisture, or film on interior surfaces of glass.

1. Warranty Period: 10 years from date of Substantial Completion.

PART 2 - PRODUCTS

2.01 MANUFACTURERS

A. Source Limitations for Glass: Obtain from single source from single manufacturer for each glass type.

B. Source Limitations for Glazing Accessories: Obtain from single source from single manufacturer for each product and installation method.

2.02 PERFORMANCE REQUIREMENTS

A. General: Installed glazing systems shall withstand normal thermal movement and wind and impact loads (where applicable) without failure, including loss or glass breakage attributable to the following: defective manufacture, fabrication, or installation; failure of sealants or gaskets to remain watertight and airtight; deterioration of glazing materials; or other defects in construction.

B. Structural Performance: Glazing shall withstand the following design loads within limits and under conditions indicated determined according to the IBC and ASTM E 1300.

1. Design Wind Pressures: Determine positive and negative wind pressures according to ASCE/SEI 7 using wind speed criteria indicated on Structural Drawings, based on heights above grade indicated on Drawings.
2. Maximum Lateral Deflection: For glass supported on all four edges, limit center-of-glass deflection at design wind pressure to not more than 1/50 times the short-side length or 1 inch, whichever is less.
3. Differential Shading: Design glass to resist thermal stresses induced by differential shading within individual glass lites.

C. Windborne-Debris-Impact Resistance: Exterior glazing shall comply with enhanced-protection testing requirements in ASTM E 1996 for Wind Zone 4 when tested according to ASTM E 1886. Test specimens shall be no smaller in width and length than glazing indicated for use on Project and shall be installed in same manner as glazing indicated for use on Project.

1. Large-Missile Test: For glazing located within 30 feet of grade.

D. Safety Glazing: Where safety glazing is indicated, provide glazing that complies with 16 CFR 1201, Category II.

E. Thermal and Optical Performance Properties: Provide glass with performance properties specified, as indicated in manufacturer's published test data, based on procedures indicated below:

1. For monolithic-glass lites, properties are based on units with lites 6 mm thick.
2. For insulating-glass units, properties are based on units of thickness indicated for overall unit and for each lite.
3. U-Factors: Center-of-glazing values, according to NFRC 100 and based on LBL's WINDOW 5.2 computer program, expressed as Btu/sq. ft. x h x deg F.
4. Solar Heat-Gain Coefficient and Visible Transmittance: Center-of-glazing values, according to NFRC 200 and based on LBL's WINDOW 5.2 computer program.

2.03 GLASS PRODUCTS, GENERAL

A. Glazing Publications: Comply with published recommendations of glass product manufacturers and organizations below unless more stringent requirements are indicated. See these publications for glazing terms not otherwise defined in this Section or in referenced standards.

1. GANA Publications: "Glazing Manual."
2. IGMA Publication for Insulating Glass: SIGMA TM-3000, "North American Glazing Guidelines for Sealed Insulating Glass Units for Commercial and Residential Use."

B. Safety Glazing Labeling: Where safety glazing is indicated, permanently mark glazing with certification label of the SGCC or another certification agency acceptable to authorities having jurisdiction. Label shall indicate manufacturer's name, type of glass, thickness, and safety glazing standard with which glass complies.

C. Thickness: Where glass thickness is indicated, it is a minimum. Provide glass that complies with performance requirements and is not less than the thickness indicated.

1. Minimum Glass Thickness for Exterior Lites: 6 mm unless otherwise indicated.

D. Strength:

1. Where annealed float glass is indicated, provide annealed float glass, heat-strengthened float glass, or fully tempered float glass as needed to comply with "Performance Requirements" Article.
2. Where heat-strengthened float glass is indicated, provide heat-strengthened float glass or fully tempered float glass as needed to comply with "Performance Requirements" Article.
3. Where fully tempered float glass is indicated, provide fully tempered float glass.

2.04 GLASS PRODUCTS

A. Clear Annealed Float Glass: ASTM C 1036, Type I, Class 1 (clear), Quality-Q3.

B. Fully Tempered Float Glass: ASTM C 1048, Kind FT (fully tempered), Condition A (uncoated) unless otherwise indicated, Type I, Class 1 (clear) or Class 2 (tinted) as indicated, Quality-Q3.

1. Fabrication Process: By horizontal (roller-hearth) process with roll-wave distortion parallel to bottom edge of glass as installed unless otherwise indicated.

C. Heat-Strengthened Float Glass: ASTM C 1048, Kind HS (heat strengthened), Type I, Condition A (uncoated) unless otherwise indicated, Type I, Class 1 (clear) or Class 2 (tinted) as indicated, Quality-Q3.

1. Fabrication Process: By horizontal (roller-hearth) process with roll-wave distortion parallel to bottom edge of glass as installed unless otherwise indicated.

2.05 LAMINATED GLASS

A. Laminated Glass: ASTM C 1172. Use materials that have a proven record of no tendency to bubble, discolor, or lose physical and mechanical properties after fabrication and installation.

1. Construction: Laminate glass with ionomeric polymer interlayer to comply with interlayer manufacturer's written instructions.
2. Interlayer Thickness: Provide thickness not less than that indicated and as needed to comply with requirements.
3. Interlayer Color: Clear unless otherwise indicated.

B. Windborne-Debris-Impact-Resistant Laminated Glass: Comply with requirements specified above for laminated glass except laminate glass with one of the following to comply with interlayer manufacturer's written instructions:

1. Ionomeric polymer interlayer.

2.06 INSULATING GLASS

A. Insulating-Glass Units: Factory-assembled units consisting of sealed lites of glass separated by a dehydrated interspace, qualified according to ASTM E 2190.

1. Sealing System: Dual seal, with manufacturer's standard primary and secondary sealants.
2. Spacer: Manufacturer's standard spacer material and construction.
3. Desiccant: Molecular sieve or silica gel, or a blend of both.

2.07 GLAZING SEALANTS

A. General:

1. Compatibility: Compatible with one another and with other materials they contact, including glass products, seals of insulating-glass units, and glazing channel substrates, under conditions of service and application, as demonstrated by sealant manufacturer based on testing and field experience.

2. Suitability: Comply with sealant and glass manufacturers' written instructions for selecting glazing sealants suitable for applications indicated and for conditions existing at time of installation.
3. Colors of Exposed Glazing Sealants: As selected by Architect from manufacturer's full range.

B. Glazing Sealant: Neutral-curing silicone glazing sealant complying with ASTM C 920, Type S, Grade NS, Class 50, Use NT.

2.08 GLAZING TAPES

A. Back-Bedding Mastic Glazing Tapes: Preformed, butyl-based, 100 percent solids elastomeric tape; nonstaining and nonmigrating in contact with nonporous surfaces; with or without spacer rod as recommended in writing by tape and glass manufacturers for application indicated; and complying with ASTM C 1281 and AAMA 800 for products indicated below:

1. AAMA 806.3 tape, for glazing applications in which tape is subject to continuous pressure.
2. AAMA 807.3 tape, for glazing applications in which tape is not subject to continuous pressure.

B. Expanded Cellular Glazing Tapes: Closed-cell, PVC foam tapes; factory coated with adhesive on both surfaces; and complying with AAMA 800 for the following types:

1. AAMA 810.1, Type 1, for glazing applications in which tape acts as the primary sealant.
2. AAMA 810.1, Type 2, for glazing applications in which tape is used in combination with a full bead of liquid sealant.

2.09 MISCELLANEOUS GLAZING MATERIALS

A. General: Provide products of material, size, and shape complying with referenced glazing standard, with requirements of manufacturers of glass and other glazing materials for application indicated, and with a proven record of compatibility with surfaces contacted in installation.

B. Cleaners, Primers, and Sealers: Types recommended by sealant or gasket manufacturer.

C. Setting Blocks: Elastomeric material with a Shore, Type A durometer hardness of 85, plus or minus 5.

D. Spacers: Elastomeric blocks or continuous extrusions of hardness required by glass manufacturer to maintain glass lites in place for installation indicated.

E. Edge Blocks: Elastomeric material of hardness needed to limit glass lateral movement (side walking).

F. Cylindrical Glazing Sealant Backing: ASTM C 1330, Type O (open-cell material), of size and density to control glazing sealant depth and otherwise produce optimum glazing sealant performance.

2.10 FABRICATION OF GLAZING UNITS

A. Fabricate glazing units in sizes required to fit openings indicated for Project, with edge and face clearances, edge and surface conditions, and bite complying with written instructions of product manufacturer and referenced glazing publications, to comply with system performance requirements.

1. Allow for thermal movements from ambient and surface temperature changes acting on glass framing members and glazing components.

a. Temperature Change: 120 deg F, ambient; 180 deg F, material surfaces.

B. Clean-cut or flat-grind vertical edges of butt-glazed monolithic lites to produce square edges with slight chamfers at junctions of edges and faces.

C. Grind smooth and polish exposed glass edges and corners.

PART 3 - EXECUTION

3.01 EXAMINATION

A. Examine framing, glazing channels, and stops, with Installer present, for compliance with the following:

1. Manufacturing and installation tolerances, including those for size, squareness, and offsets at corners.
2. Presence and functioning of weep systems.
3. Minimum required face and edge clearances.
4. Effective sealing between joints of glass-framing members.

B. Proceed with installation only after unsatisfactory conditions have been corrected.

3.02 PREPARATION

A. Clean glazing channels and other framing members receiving glass immediately before glazing. Remove coatings not firmly bonded to substrates.

B. Examine glazing units to locate exterior and interior surfaces. Label or mark units as needed so that exterior and interior surfaces are readily identifiable. Do not use materials that leave visible marks in the completed Work.

3.03 GLAZING, GENERAL

A. Comply with combined written instructions of manufacturers of glass, sealants, gaskets, and other glazing materials, unless more stringent requirements are indicated, including those in referenced glazing publications.

B. Protect glass edges from damage during handling and installation. Remove damaged glass from Project site and legally dispose of off Project site. Damaged glass includes glass with edge damage or other imperfections that, when installed, could weaken glass, impair performance, or impair appearance.

C. Apply primers to joint surfaces where required for adhesion of sealants, as determined by preconstruction testing.

D. Install setting blocks in sill rabbets, sized and located to comply with referenced glazing publications, unless otherwise required by glass manufacturer. Set blocks in thin course of compatible sealant suitable for heel bead.

E. Do not exceed edge pressures stipulated by glass manufacturers for installing glass lites.

F. Provide spacers for glass lites where length plus width is larger than 50 inches.

1. Locate spacers directly opposite each other on both inside and outside faces of glass. Install correct size and spacing to preserve required face clearances, unless gaskets and glazing tapes are used that have demonstrated ability to maintain required face clearances and to comply with system performance requirements.
2. Provide 1/8-inch minimum bite of spacers on glass and use thickness equal to sealant width. With glazing tape, use thickness slightly less than final compressed thickness of tape.

G. Provide edge blocking where indicated or needed to prevent glass lites from moving sideways in glazing channel, as recommended in writing by glass manufacturer and according to requirements in referenced glazing publications.

H. Set glass lites in each series with uniform pattern, draw, bow, and similar characteristics.

I. Set glass lites with proper orientation so that coatings face exterior or interior as specified.

J. Where wedge-shaped gaskets are driven into one side of channel to pressurize sealant or gasket on opposite side, provide adequate anchorage so gasket cannot walk out when installation is subjected to movement.

K. Square cut wedge-shaped gaskets at corners and install gaskets in a manner recommended by gasket manufacturer to prevent corners from pulling away; seal corner joints and butt joints with sealant recommended by gasket manufacturer.

3.04 TAPE GLAZING

A. Position tapes on fixed stops so that, when compressed by glass, their exposed edges are flush with or protrude slightly above sightline of stops.

B. Install tapes continuously, but not necessarily in one continuous length. Do not stretch tapes to make them fit opening.

C. Cover vertical framing joints by applying tapes to heads and sills first, then to jambs. Cover horizontal framing joints by applying tapes to jambs, then to heads and sills.

D. Place joints in tapes at corners of opening with adjoining lengths butted together, not lapped. Seal joints in tapes with compatible sealant approved by tape manufacturer.

E. Do not remove release paper from tape until right before each glazing unit is installed.

F. Apply heel bead of elastomeric sealant if required for performance.

G. Center glass lites in openings on setting blocks, and press firmly against tape by inserting dense compression gaskets formed and installed to lock in place against faces of removable stops. Start gasket applications at corners and work toward centers of openings.

3.05 GASKET GLAZING (DRY)

A. Cut compression gaskets to lengths recommended by gasket manufacturer to fit openings exactly, with allowance for stretch during installation.

B. Insert soft compression gasket between glass and frame or fixed stop so it is securely in place with joints miter cut and bonded together at corners.

C. Installation with Drive-in Wedge Gaskets: Center glass lites in openings on setting blocks, and press firmly against soft compression gasket by inserting dense compression gaskets formed and installed to lock in place against faces of removable stops. Start gasket applications at corners and work toward centers of openings. Compress gaskets to produce a weathertight seal without developing bending stresses in glass. Seal gasket joints with sealant recommended by gasket manufacturer.

D. Installation with Pressure-Glazing Stops: Center glass lites in openings on setting blocks, and press firmly against soft compression gasket. Install dense compression gaskets and pressure-glazing stops, applying pressure uniformly to compression gaskets. Compress gaskets to produce a weathertight seal without developing bending stresses in glass. Seal gasket joints with sealant recommended by gasket manufacturer.

E. Install gaskets so they protrude past face of glazing stops.

3.06 SEALANT GLAZING (WET)

A. Install continuous spacers, or spacers combined with cylindrical sealant backing, between glass lites and glazing stops to maintain glass face clearances and to prevent sealant from extruding into glass channel and blocking weep systems until sealants cure. Secure spacers or spacers and backings in place and in position to control depth of installed sealant relative to edge clearance for optimum sealant performance.

B. Force sealants into glazing channels to eliminate voids and to ensure complete wetting or bond of sealant to glass and channel surfaces.

C. Tool exposed surfaces of sealants to provide a substantial wash away from glass.

3.07 CLEANING AND PROTECTION

A. Immediately after installation remove nonpermanent labels and clean surfaces.

B. Protect glass from contact with contaminating substances resulting from construction operations. Examine glass surfaces adjacent to or below exterior concrete and other masonry surfaces at frequent intervals during construction, but not less than once a month, for buildup of dirt, scum, alkaline deposits, or stains.

1. If, despite such protection, contaminating substances do come into contact with glass, remove substances immediately as recommended in writing by glass manufacturer. Remove and replace glass that cannot be cleaned without damage to coatings.

C. Remove and replace glass that is damaged during construction period.

D. Wash glass on both exposed surfaces not more than four days before date scheduled for inspections that establish date of Substantial Completion. Wash glass as recommended in writing by glass manufacturer.

3.08 MONOLITHIC GLASS SCHEDULE

A. Interior Applications where Safety Glazing is Not Required: Clear annealed float glass.

1. Minimum Thickness: 6 mm.

B. Interior Applications where Safety Glazing is Required: Clear fully tempered float glass.

1. Minimum Thickness: 6 mm.
2. Safety glazing required.
3. Decorative Glass: Sandblasted before tempering.

3.09 INSULATING-LAMINATED-GLASS SCHEDULE

A. Refer to Glazing Schedule on Drawings.

END OF SECTION

SECTION 08 83 00
MIRRORS

PART 1 - GENERAL

1.01 SUMMARY

A. Section includes:

1. Silvered flat glass mirrors.

B. Related Sections include:

1. Section 088000 “Glazing” for glass with reflective coatings used for vision and spandrel lites.
2. Section 102800 “Toilet, Bath, and Laundry Accessories” for metal-framed mirrors.

1.02 ACTION SUBMITTALS

A. Product Data: For each type of product.

1. Mirrors: Include description of materials and process used to produce each type of silvered flat glass mirror specified that indicates sources of glass, glass coating components, edge sealer, and quality-control provisions.

B. Shop Drawings: Include mirror elevations, edge details, mirror hardware, and attachment details.

1.03 INFORMATIONAL SUBMITTALS

A. Qualification Data: For Installer.

B. Sample Warranty: For special warranty.

1.04 CLOSEOUT SUBMITTALS

A. Maintenance Data: For mirrors to include in maintenance manuals.

1.05 DELIVERY, STORAGE, AND HANDLING

A. Protect mirrors in accordance with mirror manufacturer's written instructions and as needed to prevent damage to mirrors from moisture, condensation, temperature changes, direct exposure to sun, or other causes.

B. Comply with mirror manufacturer's written instructions for shipping, storing, and handling mirrors as needed to prevent deterioration of silvering, damage to edges, and abrasion of glass surfaces and applied coatings. Store indoors.

1.06 FIELD CONDITIONS

A. Environmental Limitations: Do not install mirrors until ambient temperature and humidity conditions are maintained at levels indicated for final occupancy.

1.07 WARRANTY

A. Special Warranty: Manufacturer agrees to replace mirrors that deteriorate within specified warranty period. Deterioration of mirrors is defined as defects developed from normal use that are not attributed to mirror breakage or to maintaining and cleaning mirrors contrary to manufacturer's written instructions. Defects include discoloration, black spots, and clouding of the silver film.

1. Warranty Period: Five years from date of Substantial Completion.

PART 2 - PRODUCTS

2.01 MANUFACTURERS

A. Manufacturers: Subject to compliance with requirements, available manufacturers offering products that may be incorporated into the Work include, but are not limited to, the following:

1. Avalon Glass and Mirror Company.
2. Binswanger Mirror; a division of Vitro America, Inc.
3. Guardian Glass; SunGuard.
4. National Glass Industries.
5. Trulite Glass & Aluminum Solutions, LLC.
6. Virginia Mirror Company, Inc.

B. Source Limitations for Mirrors: Obtain mirrors from single source from single manufacturer.

C. Source Limitations for Mirror Accessories: Obtain mirror-glazing accessories from single source.

2.02 SILVERED FLAT GLASS MIRRORS

A. Tempered Glass Mirrors: Mirror Glazing Quality for blemish requirements and complying with ASTM C1048 for Kind FT, Condition A, tempered float glass before silver coating is applied; clear.

1. Nominal Thickness: 6.0 mm.

B. Safety Glazing Products: For tempered mirrors, provide products that comply with 16 CFR 1201, Category II.

2.03 MISCELLANEOUS MATERIALS

A. Setting Blocks: Elastomeric material with a Shore, Type A durometer hardness of 85, plus or minus 5.

B. Edge Sealer: Coating compatible with glass coating and approved by mirror manufacturer for use in protecting against silver deterioration at mirrored glass edges.

C. Mirror Mastic: An adhesive setting compound, asbestos-free, produced specifically for setting mirrors and certified by both mirror and mastic manufacturer as compatible with glass coating and substrates on which mirrors will be installed.

1. Manufacturers: Subject to compliance with requirements, available manufacturers offering products that may be incorporated into the Work include, but are not limited to the following:

a. C.R. Laurence Co., Inc.
b. Franklin International.
c. Liquid Nails Adhesive.
d. Palmer Products Corporation.
e. Sommer & Maca Industries, Inc.

2.04 MIRROR HARDWARE

A. Aluminum J-Channels: Aluminum extrusions with a return deep enough to produce a glazing channel to accommodate mirrors of thickness indicated and in lengths required to cover edges of mirrors in a single piece.

1. Aluminum J Channel Bottom and Side Trim: J-channels formed with front leg and back leg not less than 3/8 and 7/8 inch in height, respectively, and a thickness of not less than 0.04 inch.

a. Manufacturers: Subject to compliance with requirements, available manufacturers offering products that may be incorporated into the Work include, but are not limited to the following:

1) Andscot Company, Inc.
2) C.R. Laurence Co., Inc.
3) Stylmark, Inc.

2. Aluminum J Channel Top Trim: J-channels formed with front leg and back leg not less than 5/8 and 1 inch in height, respectively, and a thickness of not less than 0.04 inch.

a. Manufacturers: Subject to compliance with requirements, available manufacturers offering products that may be incorporated into the Work include, but are not limited to the following:

1) Andscot Company, Inc.
2) C.R. Laurence Co., Inc.
3) Stylmark, Inc.

3. Finish: Clear bright anodized.

B. Fasteners: Fabricated of same basic metal and alloy as fastened metal and matching it in finished color and texture where fasteners are exposed.

C. Anchors and Inserts: Provide devices as required for mirror hardware installation. Provide toothed or lead-shield, expansion-bolt devices for drilled-in-place anchors. Provide galvanized anchors and inserts for applications on inside face of exterior walls and where indicated.

2.05 FABRICATION

A. Shop fabricate mirrors to greatest extent possible.

B. Fabricate cutouts for notches and holes in mirrors without marring visible surfaces. Locate and size cutouts, so they fit closely around penetrations in mirrors.

PART 3 - EXECUTION

3.01 EXAMINATION

A. Examine substrates, over which mirrors are to be mounted, with Installer present, for compliance with installation tolerances, substrate preparation, and other conditions affecting performance of the Work.

B. Verify compatibility with and suitability of substrates, including compatibility of existing finishes or primers with mirror mastic.

C. Proceed with installation only after unsatisfactory conditions have been corrected and surfaces are dry.

3.02 PREPARATION

A. Comply with mastic manufacturer's written installation instructions for preparation of substrates, including coating substrates with mastic manufacturer's special bond coating where applicable.

3.03 INSTALLATION

A. General: Install mirrors to comply with mirror manufacturer's written instructions and with referenced National Glass Association (NGA) publications. Mount mirrors accurately in place in a manner that avoids distorting reflected images.

1. NGA Publications: ”Glazing Manual” and “Installation Techniques Designed to Prolong the Life of Flat Glass Mirrors.”

B. Provide a minimum airspace of 1/8 inch between back of mirrors and mounting surface for air circulation between back of mirrors and face of mounting surface.

C. Install mirrors with mastic and mirror hardware. Attach mirror hardware securely to mounting surfaces with mechanical fasteners installed with anchors or inserts as applicable. Install fasteners so heads do not impose point loads on backs of mirrors.

1. Aluminum J-Channels: Provide setting blocks 1/8 inch thick by 4 inches long at quarter points. To prevent trapping water, provide, between setting blocks, two slotted weeps not less than 1/4 inch wide by 3/8 inch long at bottom channel.
2. Mirror Clips: Place a felt or plastic pad between mirror and each clip to prevent spalling of mirror edges. Locate clips so they are symmetrically placed and evenly spaced].
3. Install mastic as follows:

a. Apply barrier coat to mirror backing where approved in writing by manufacturers of mirrors and backing material.
b. Apply mastic to comply with mastic manufacturer's written instructions for coverage and to allow air circulation between back of mirrors and face of mounting surface.
c. After mastic is applied, align mirrors and press into place while maintaining a minimum airspace of 1/8 inch between back of mirrors and mounting surface.

3.04 CLEANING AND PROTECTION

A. Protect mirrors from breakage and contaminating substances resulting from construction operations.

B. Do not permit edges of mirrors to be exposed to standing water.

C. Maintain environmental conditions that prevent mirrors from being exposed to moisture from condensation or other sources for continuous periods of time.

D. Clean exposed surface of mirrors not more than four days before date scheduled for inspections that establish date of Substantial Completion. Clean mirrors as recommended in writing by mirror manufacturer and NGA's publication “Proper Procedures for Cleaning Flat Glass Mirrors.”

END OF SECTION

SECTION 08 87 00
GLAZING SURFACE FILMS

PART 1 - GENERAL

1.01 SUMMARY

A. Section includes translucent glazing film installed on inside face of exterior glazing.

1.02 ACTION SUBMITTALS

A. Product Data: Include application instructions and use requirements.

B. Samples for Initial Selection: For translucent glazing film, submit 3 inch by 4 inch samples of full range of manufacturer's colors for Architect's selection.

C. Samples for Verification Purposes: For each type glazing film, submit 8 inch by 10 inch Sample. Mount on specified glazing.

1.03 CLOSEOUT SUBMITTALS

A. Maintenance and Cleaning Instructions: List cleaning solutions recommended by the manufacturer and describe proper cleaning procedures.

1.04 QUALITY ASSURANCE

A. Applicator: Firm with not less than 5 years successful experience applying specified film to glass in commercial applications.

1.05 SEQUENCING

A. Apply glazing film after storefront and glazing installation are completed and just before Substantial Completion.

PART 2 - PRODUCTS

2.01 MANUFACTURERS

A. Basis-of-Design: Design is based MAdico, "Decorative Series White Out PS." Subject to compliance with requirements, provide product approved by the Architect manufactured by one of the following:

1. CPFilms, Inc.
2. Huber Optik.

2.02 MATERIALS

A. Translucent Glazing Film:

1. Glazing film designed for application to inside of exterior glazing.
2. Properties:

   a. Ultraviolet Rejected: More than 98 percent
   b. Shading Coefficient: 0.51
   c. Solar Heat Gain Coefficient: 0.45
   d. Total Solar Energy Rejected: 55 percent
   e. Total Solar Transmittance: 36 percent
   f. Total Solar Absorption: 33 percent
   g. Luminous Efficacy: 1.37
   h. Emissivity: 0.53
   i. Film Thickness: 1.5 mils (0.04 mm)

3. Provide pattern selected by Architect from manufacturer's full range of patterns.

PART 3 - EXECUTION

3.01 PREPARATION

A. Clean glass in accordance with manufacturer's instructions.

3.02 INSTALLATION

A. Apply glazing film to inside room face of interior glazing in accordance with manufacturer's instructions except as otherwise indicated.

B. Provide installation free of streaks, bubbles, cracks, and other noticeable imperfections.

3.03 FIELD QUALITY CONTROL

A. Comply with "Visual Inspection Standard" published by IWFA.

3.04 PROTECTION AND CLEANING

A. Protect installed glazing film from damage in accordance with manufacturer's instructions until Substantial Completion. Replace glazing film damaged by construction activities so that re-paired installation cannot be distinguished from undamaged installation.

B. Immediately prior to Substantial Completion, clean glazing film in accordance with manufacturer's instructions.

END OF SECTION

SECTION 08 88 13
FIRE-RESISTANT GLAZING

PART 1 - GENERAL

1.01 SUMMARY

A. Section includes:

1. Fire-protection-rated glazing.
2. Fire-resistance-rated glazing.

1.02 DEFINITIONS

A. Glass Manufacturers: Firms that produce primary glass, fabricated glass, or both, as defined in referenced glazing publications.

B. Glass Thicknesses: Indicated by thickness designations in millimeters according to ASTM C 1036.

1.03 COORDINATION

A. Coordinate glazing channel dimensions to provide necessary bite on glass, minimum edge and face clearances, and adequate sealant thicknesses, with reasonable tolerances.

1.04 ACTION SUBMITTALS

A. Product Data: For each type of product.

B. Glass Samples: For each type of glass product; 12 inches square.

C. Glazing Schedule: List glass types and thicknesses for each size opening and location. Use same designations indicated on Drawings.

1.05 INFORMATIONAL SUBMITTALS

A. Product Certificates: For each type of glass and glazing product, from manufacturer.

B. Sample Warranties: For special warranties.

1.06 DELIVERY, STORAGE, AND HANDLING

A. Protect glazing materials according to manufacturer's written instructions. Prevent damage to glass and glazing materials from condensation, temperature changes, direct exposure to sun, or other causes.

1.07 FIELD CONDITIONS

A. Environmental Limitations: Do not deliver or install fire-resistant glazing until spaces are enclosed and weathertight and temporary HVAC system is operating and maintaining ambient temperature conditions at occupancy levels during the remainder of the construction period.

1.08 WARRANTY

A. Manufacturer's Special Warranty on Laminated Glass: Manufacturer agrees to replace laminated-glass units that deteriorate within specified warranty period. Deterioration of laminated glass is defined as defects developed from normal use that are not attributed to glass breakage or to maintaining and cleaning laminated glass contrary to manufacturer's written instructions. Defects include edge separation, delamination materially obstructing vision through glass, and blemishes exceeding those allowed by referenced laminated-glass standard.

1. Warranty Period: Five years from date of Substantial Completion.

PART 2 - PRODUCTS

2.01 MANUFACTURERS

A. Source Limitations for Glass: Obtain from single source from single manufacturer for each glass type.

B. Source Limitations for Glazing Accessories: Obtain from single source from single manufacturer for each product and installation method.

2.02 PERFORMANCE REQUIREMENTS

A. General: Installed glazing systems shall withstand normal thermal movement and impact loads (where applicable) without failure, including loss or glass breakage attributable to the following: defective manufacture, fabrication, or installation; deterioration of glazing materials; or other defects in construction.

2.03 GLASS PRODUCTS, GENERAL

A. Glazing Publications: Comply with published recommendations of glass product manufacturers and organization below unless more stringent requirements are indicated. Refer to these publications for glazing terms not otherwise defined in this Section or in referenced standards.

1. GANA Publications: “Laminated Glazing Reference Manual” and ”Glazing Manual.”

B. Safety Glazing Labeling: Permanently mark glazing with certification label of the Safety Glazing Certification Council or another certification agency acceptable to authorities having jurisdiction. Label shall indicate manufacturer's name, type of glass, glass thickness, and safety glazing standard with which glass complies.

2.04 GLASS PRODUCTS

A. Ultraclear Float Glass: ASTM C 1036, Type I, Quality-Q3, Class I (clear), with visible light transmission not less than 91 percent.

B. Laminated Glass: ASTM C 1172. Use materials that have a proven record of no tendency to bubble, discolor, or lose physical and mechanical properties after fabrication and installation.

1. Construction: Laminate glass with polyvinyl butyral interlayer unless fire-protection or fire-resistance rating is based on another product.
2. Interlayer Thickness: Provide thickness as needed to comply with requirements.
3. Interlayer Color: Clear unless otherwise indicated.

2.05 FIRE-PROTECTION-RATED GLAZING

A. Fire-Protection-Rated Glazing: Listed and labeled by a testing agency acceptable to authorities having jurisdiction, for fire-protection ratings indicated, based on positive-pressure testing according to NFPA 257 or UL 9, including the hose-stream test, and shall comply with NFPA 80.

1. Lites in fire-rated doors.

B. Fire-Protection-Rated Glazing Labeling: Permanently mark fire-protection-rated glazing with certification label of a testing agency acceptable to authorities having jurisdiction. Label shall indicate manufacturer's name; test standard; whether glazing is permitted to be used in doors or openings; if permitted in openings, whether or not glazing has passed the hose-stream test; whether or not glazing meets 450 deg F (250 deg C) temperature-rise limitation; and the fire-resistance rating in minutes.

C. Film-Faced Ceramic Glazing: Clear, ceramic flat glass; 5-mm thickness; faced on one surface with a clear glazing film; and complying with 16 CFR 1201, Category II.

1. Manufacturers: Subject to compliance with requirements, provide products by one of the following:

   a. AGC Glass Company North America, Inc.
   b. SAFTI FIRST Fire Rated Glazing Solutions.
   c. Schott North America, Inc.
   d. Technical Glass Products.
   e. Vetrotech Saint-Gobain.

2.06 FIRE-RESISTANCE-RATED GLAZING

A. Fire-Resistance-Rated Glazing: Listed and labeled by a testing agency acceptable to authorities having jurisdiction, for fire-resistance ratings indicated, based on testing according to ASTM E 119 or UL 263.

1. Application: As indicated on Drawings.

B. Fire-Resistance-Rated Glazing Labeling: Permanently mark fire-resistance-rated glazing with certification label of a testing agency acceptable to authorities having jurisdiction. Label shall indicate manufacturer's name, test standard, that the glazing is approved for use in walls, and the fire-resistance rating in minutes.

C. Laminated Glass with Intumescent Interlayers: Laminated glass made from multiple plies of uncoated, ultraclear float glass; with intumescent interlayers; and complying with 16 CFR 1201, Category II.

1. Manufacturers: Subject to compliance with requirements, provide products by one of the following:

a. AGC Glass Company North America, Inc.
b. Pilkington North America.
c. SAFTI FIRST Fire Rated Glazing Solutions.
d. Technical Glass Products.
e. Vetrotech Saint-Gobain.

2.07 GLAZING ACCESSORIES

A. Provide glazing gaskets, glazing sealants, glazing tapes, setting blocks, spacers, edge blocks, and other glazing accessories that are compatible with glazing products and each other and are approved by testing agencies that listed and labeled fire-resistant glazing products with which products are used for applications and fire-protection ratings indicated.

B. Glazing Sealants for Fire-Rated Glazing Products: Neutral-curing silicone glazing sealant complying with ASTM C 920, Type S, Grade NS, Class 50, Use NT. Comply with sealant and glass manufacturers' written instructions for selecting glazing sealants suitable for applications indicated.

1. Manufacturers: Subject to compliance with requirements, provide products by one of the following:

a. Dow Corning Corporation.
b. GE Construction Sealants; Momentive Performance Materials Inc.
c. Tremco Incorporated.

2. Colors of Exposed Glazing Sealants: As selected by Architect from manufacturer's full range.

C. Back-Bedding Mastic Glazing Tapes: Preformed, butyl-based, 100 percent solids elastomeric tape; nonstaining and nonmigrating in contact with nonporous surfaces; with or without spacer rod as recommended in writing by tape and glass manufacturers for application indicated; and complying with ASTM C 1281 and AAMA 800 for products indicated below:

1. AAMA 806.3 tape, for glazing applications in which tape is subject to continuous pressure.
2. AAMA 807.3 tape, for glazing applications in which tape is not subject to continuous pressure.

D. Expanded Cellular Glazing Tapes: Closed-cell, PVC foam tapes; factory coated with adhesive on both surfaces; and complying with AAMA 800 for the following types:

1. AAMA 810.1, Type 1, for glazing applications in which tape acts as the primary sealant.
2. AAMA 810.1, Type 2, for glazing applications in which tape is used in combination with a full bead of liquid sealant.

2.08 MISCELLANEOUS GLAZING MATERIALS

A. General: Provide products of material, size, and shape complying with referenced glazing standard, requirements of manufacturers of glass and other glazing materials for application indicated, and with a proven record of compatibility with surfaces contacted in installation.

B. Cylindrical Glazing Sealant Backing: ASTM C 1330, Type O (open-cell material), of size and density to control glazing sealant depth and otherwise produce optimum glazing sealant performance.

C. Perimeter Insulation for Fire-Resistive Glazing: Product that is approved by testing agency that listed and labeled fire-resistant glazing product with which it is used for application and fire-protection rating indicated.

2.09 FABRICATION OF GLAZING UNITS

A. Fabricate glazing units in sizes required to fit openings indicated for Project, with edge and face clearances, edge and surface conditions, and bite complying with written instructions of product manufacturer and referenced glazing publications, to comply with system performance requirements.

PART 3 - EXECUTION

3.01 EXAMINATION

A. Examine framing, glazing channels, and stops, with Installer present, for compliance with manufacturing and installation tolerances, including those for size, squareness, and offsets at corners, and for compliance with minimum required face and edge clearances.

B. Proceed with installation only after unsatisfactory conditions have been corrected.

3.02 PREPARATION

A. Clean glazing channels and other framing members receiving glass immediately before glazing. Remove coatings not firmly bonded to substrates.

B. Examine glazing units to locate fire side and protected side. Label or mark units as needed so that fire side and protected side are readily identifiable. Do not use materials that leave visible marks in the completed work.

3.03 GLAZING, GENERAL

A. Use methods approved by testing agencies that listed and labeled fire-resistant glazing products.

B. Comply with combined written instructions of manufacturers of glass, sealants, gaskets, and other glazing materials unless more stringent requirements are indicated, including those in referenced glazing publications.

C. Protect glass edges from damage during handling and installation. Remove damaged glass from Project site and legally dispose of off Project site. Damaged glass is glass with edge damage or other imperfections that, when installed, could weaken glass and impair performance and appearance.

D. Apply primers to joint surfaces where required for adhesion of sealants, as determined by preconstruction testing.

E. Install setting blocks in sill rabbets, sized and located to comply with referenced glazing publications unless otherwise required by glass manufacturer. Set blocks in thin course of compatible sealant suitable for heel bead.

F. Do not exceed edge pressures stipulated by glass manufacturers for installing glass lites.

G. Provide spacers for glass lites where length plus width is larger than 50 inches.

1. Locate spacers directly opposite each other on both inside and outside faces of glass. Install correct size and spacing to preserve required face clearances unless gaskets and glazing tapes are used that have demonstrated ability to maintain required face clearances and to comply with system performance requirements.
2. Provide 1/8-inch minimum bite of spacers on glass and use thickness equal to sealant width. With glazing tape, use thickness slightly less than final compressed thickness of tape.

H. Provide edge blocking where indicated or needed to prevent glass lites from moving sideways in glazing channel, as recommended in writing by glass manufacturer and according to requirements in referenced glazing publications.

I. Set glass lites with proper orientation so that coatings face fire side or protected side as specified.

J. Where wedge-shaped gaskets are driven into one side of channel to pressurize sealant or gasket on opposite side, provide adequate anchorage so gasket cannot walk out when installation is subjected to movement.

K. Square cut wedge-shaped gaskets at corners and install gaskets in a manner recommended by gasket manufacturer to prevent corners from pulling away; seal corner joints and butt joints with sealant recommended by gasket manufacturer.

3.04 TAPE GLAZING

A. Position tapes on fixed stops so that, when compressed by glass, their exposed edges are flush with or protrude slightly above sightline of stops.

B. Install tapes continuously, but not necessarily in one continuous length. Do not stretch tapes to make them fit opening.

C. Cover vertical framing joints by applying tapes to heads and sills first and then to jambs. Cover horizontal framing joints by applying tapes to jambs and then to heads and sills.

D. Place joints in tapes at corners of opening with adjoining lengths butted together, not lapped. Seal joints in tapes with compatible sealant approved by tape manufacturer.

E. Do not remove release paper from tape until right before each glazing unit is installed.

F. Apply heel bead of elastomeric sealant.

G. Center glass lites in openings on setting blocks and press firmly against tape by inserting dense compression gaskets formed and installed to lock in place against faces of removable stops. Start gasket applications at corners and work toward centers of openings.

H. Apply cap bead of elastomeric sealant over exposed edge of tape.

3.05 GASKET GLAZING (DRY)

A. Cut compression gaskets to lengths recommended by gasket manufacturer to fit openings exactly, with allowance for stretch during installation.

B. Insert soft compression gasket between glass and frame or fixed stop, so it is securely in place with joints miter cut and bonded together at corners.

C. Installation with Drive-in Wedge Gaskets: Center glass lites in openings on setting blocks and press firmly against soft compression gasket by inserting dense compression gaskets formed and installed to lock in place against faces of removable stops. Start gasket applications at corners and work toward centers of openings.

D. Install gaskets so they protrude past face of glazing stops.

3.06 SEALANT GLAZING (WET)

A. Install continuous spacers, or spacers combined with cylindrical sealant backing, between glass lites and glazing stops to maintain glass face clearances. Secure spacers or spacers and backings in place and in position to control depth of installed sealant relative to edge clearance for optimum sealant performance.

B. Force sealants into glazing channels to eliminate voids and to ensure complete wetting or bond of sealant to glass and channel surfaces.

C. Tool exposed surfaces of sealants to provide a substantial washaway from glass.

3.07 CLEANING AND PROTECTION

A. Immediately after installation, remove nonpermanent labels and clean surfaces.

B. Protect glass from contact with contaminating substances resulting from construction operations. Examine glass surfaces adjacent to or below exterior concrete and other masonry surfaces at frequent intervals during construction, but not less than once a month, for buildup of dirt, scum, alkaline deposits, or stains.

1. If, despite such protection, contaminating substances do come into contact with glass, remove substances immediately as recommended in writing by glass manufacturer.

C. Remove and replace glass that is damaged during construction period.

D. Wash glass on both exposed surfaces in each area of Project not more than four days before date scheduled for inspections that establish date of Substantial Completion. Wash glass as recommended in writing by glass manufacturer.

END OF SECTION

SECTION 09 21 16.23
GYPSUM BOARD SHAFT WALL ASSEMBLIES

PART 1 - GENERAL

1.01 SUMMARY

A. Section includes gypsum board shaft wall assemblies.

1.02 ACTION SUBMITTALS

A. Product Data: For each component of gypsum board shaft wall assembly.

1.03 DELIVERY, STORAGE, AND HANDLING

A. Store materials inside under cover and keep them dry and protected against weather, condensation, direct sunlight, construction traffic, and other potential causes of damage. Stack panels flat and support them on risers on a flat platform to prevent sagging.

1.04 FIELD CONDITIONS

A. Environmental Limitations: Comply with gypsum-shaftliner-board manufacturer's written instructions.

B. Do not install finish panels until installation areas are enclosed and conditioned.

C. Do not install panels that are wet, moisture damaged, or mold damaged.

1. Indications that panels are wet or moisture damaged include, but are not limited to, discoloration, sagging, and irregular shape.
2. Indications that panels are mold damaged include, but are not limited to, fuzzy or splotchy surface contamination and discoloration.

PART 2 - PRODUCTS

2.01 PERFORMANCE REQUIREMENTS

A. Fire-Resistance-Rated Assemblies: For fire-resistance-rated assemblies, provide materials and construction identical to those tested in assembly indicated according to ASTM E 119 by an independent testing agency.

B. STC-Rated Assemblies: Provide materials and construction identical to those of assemblies tested according to ASTM E 90 and classified according to ASTM E 413 by a testing and inspecting agency.

2.02 GYPSUM BOARD SHAFT WALL ASSEMBLIES

A. Fire-Resistance Rating: 1 hour.

B. Gypsum Shaftliner Board:

1. Type X: ASTM C 1396/C 1396M; manufacturer's proprietary fire-resistive liner panels with paper faces, 1 inch thick, with double beveled long edges.

a. Manufacturers: Subject to compliance with requirements, available manufacturers offering products that may be incorporated into the Work include, but are not limited to the following:

1) American Gypsum.
2) CertainTeed Corporation.
3) Georgia-Pacific Gypsum LLC.
4) National Gypsum Company.
5) USG Corporation.

C. Non-Load-Bearing Steel Framing, General: Complying with ASTM C 645 requirements for metal unless otherwise indicated and complying with requirements for fire-resistance-rated assembly indicated.

1. Protective Coating: Coating with equivalent corrosion resistance of ASTM A 653/A 653M, G40 unless otherwise indicated.

D. Studs: Manufacturer's standard profile for repetitive, corner, and end members as follows:

1. Depth: As indicated.
2. Minimum Base-Metal Thickness: 0.018 inch.

E. Runner Tracks: Manufacturer's standard J-profile track with manufacturer's standard long-leg length, but at least 2 inches long and matching studs in depth.

1. Minimum Base-Metal Thickness: Matching steel studs.

F. Firestop Tracks: Top runner manufactured to allow partition heads to expand and contract with movement of the structure while maintaining continuity of fire-resistance-rated assembly indicated; in thickness not less than indicated for studs and in width to accommodate depth of studs.

1. Products: Subject to complinace with requirements, available products that may be incorporated into the Work include, but are not limited to, the following:

a. Fire Trak Corp.; Fire Trak System.

b. Metal-Lite, Inc.; The System.

c. Steel Network Inc. (The); VertiTrack VTD Series.

G. Elevator-Hoistway-Entrance Struts: Manufacturer's standard J-profile jamb strut with long-leg length of 3 inches, matching studs in depth, and not less than 0.033 inch thick.

H. Finish Panels: As indicated.

I. Sound Attenuation Blankets: As specified in Division 09 Section "Gypsum Board."

J. Fire-Resistance-Rated Assemblies: Comply with mineral-fiber requirements of assembly.

2.03 AUXILIARY MATERIALS

A. General: Provide auxiliary materials that comply with shaft wall manufacturer's written instructions.

B. Trim Accessories: Cornerbead, edge trim, and control joints of material and shapes as specified in Section 092900 "Gypsum Board" that comply with gypsum board shaft wall assembly manufacturer's written instructions for application indicated.

C. Steel Drill Screws: ASTM C 1002 unless otherwise indicated.

D. Track Fasteners: Power-driven fasteners of size and material required to withstand loading conditions imposed on shaft wall assemblies without exceeding allowable design stress of track, fasteners, or structural substrates in which anchors are embedded.

1. Expansion Anchors: Fabricated from corrosion-resistant materials, with allowable load or strength design capacities calculated according to ICC-ES AC193 and ACI 318 greater than or equal to the design load, as determined by testing per ASTM E 488/E 488M conducted by a qualified testing agency.
2. Power-Actuated Anchors: Fastener system of type suitable for application indicated, fabricated from corrosion-resistant materials, with allowable load capacities calculated according to ICC-ES AC70, greater than or equal to the design load, as determined by testing per ASTM E 1190 conducted by a qualified testing agency.

E. Reinforcing: Galvanized-steel reinforcing strips with 0.033-inch minimum thickness of base metal (uncoated).

F. Acoustical Sealant: Section 079219 "Acoustical Joint Sealants."

G. Gypsum Board Cants:

1. Gypsum Board Panels: As specified in Section 092900 "Gypsum Board," Type X, 1/2- or 5/8-inch panels.
2. Adhesive: Laminating adhesive as specified in Section 092900 "Gypsum Board."
3. Non-Load-Bearing Steel Framing: As specified in Section 092216 "Non-Structural Metal Framing."

PART 3 - EXECUTION

3.01 EXAMINATION

A. Examine substrates and conditions, with Installer present, for compliance with requirements for installation tolerances and other conditions affecting performance of the Work.

B. Examine panels before installation. Reject panels that are wet, moisture damaged, or mold damaged.

C. Proceed with installation only after unsatisfactory conditions have been corrected.

3.02 INSTALLATION

A. General: Install gypsum board shaft wall assemblies to comply with requirements of fire-resistance-rated assemblies indicated and manufacturer's written installation instructions.

B. Do not bridge building expansion joints with shaft wall assemblies; frame both sides of expansion joints with furring and other support.

C. Install supplementary framing in gypsum board shaft wall assemblies around openings and as required for blocking, bracing, and support of gravity and pullout loads of fixtures, equipment, services, heavy trim, furnishings, wall-mounted door stops, and similar items that cannot be supported directly by shaft wall assembly framing.

1. Elevator Hoistway: At elevator hoistway-entrance door frames, provide jamb struts on each side of door frame.
2. Reinforcing: Provide where items attach directly to shaft wall assembly as indicated on Drawings; accurately position and secure behind at least one layer of face panel.

D. Penetrations: At penetrations in shaft wall, maintain fire-resistance rating of shaft wall assembly by installing supplementary steel framing around perimeter of penetration and fire protection behind boxes containing wiring devices, elevator call buttons and floor indicators, and similar items.

E. Isolate perimeter of gypsum panels from building structure to prevent cracking of panels while maintaining continuity of fire-rated construction.

F. Firestop Tracks: Where indicated, install to maintain continuity of fire-resistance-rated assembly indicated.

G. Control Joints: Install control joints at locations indicated on Drawings, according to ASTM C 840 and in specific locations approved by Architect while maintaining fire-resistance rating of gypsum board shaft wall assemblies.

H. Gypsum Board Cants: At projections into shaft [**exceeding 4 inches**] [**where indicated**], install gypsum board cants covering tops of projections.

1. Slope cant panels at least 75 degrees from horizontal. Set base edge of panels in adhesive and secure top edges to shaft walls at 24 inches o.c. with screws fastened to shaft wall framing.
2. Where non-load-bearing steel framing is required to support gypsum board cants, install framing at 24 inches o.c. and extend studs from the projection to shaft wall framing.

I. Installation Tolerance: Install each framing member so fastening surfaces vary not more than 1/8 inch from the plane formed by faces of adjacent framing.

3.03 PROTECTION

A. Protect installed products from damage from weather, condensation, direct sunlight, construction, and other causes during remainder of the construction period.

B. Remove and replace panels that are wet, moisture damaged, or mold damaged.

1. Indications that panels are wet or moisture damaged include, but are not limited to, discoloration, sagging, and irregular shape.
2. Indications that panels are mold damaged include, but are not limited to, fuzzy or splotchy surface contamination and discoloration.

END OF SECTION

SECTION 09 22 16
NON-STRUCTURAL METAL FRAMING

PART 1 - GENERAL

1.01 SUMMARY

A. Section includes:

1. Non-load-bearing steel framing systems for interior partitions.
2. Suspension systems for interior ceilings and soffits.
3. Grid suspension systems for gypsum board ceilings.

B. Related Sections include:

1. Section 054000 “Cold-Formed Metal Framing” for exterior and interior load-bearing and exterior non-load-bearing wall studs; floor joists; roof rafters and ceiling joists; and roof trusses.

1.02 ACTION SUBMITTALS

A. Product Data: For each type of product.

1. Include data indicating compliance with performance standards. Clearly indicate on Product Data size and thickness of framing required for each condition.

PART 2 - PRODUCTS

2.01 PERFORMANCE REQUIREMENTS

A. Fire-Test-Response Characteristics: For fire-resistance-rated assemblies that incorporate non-load-bearing steel framing, provide materials and construction identical to those tested in assembly indicated, according to ASTM E 119 by an independent testing agency.

B. STC-Rated Assemblies: For STC-rated assemblies, provide materials and construction identical to those tested in assembly indicated on Drawings, according to ASTM E 90 and classified according to ASTM E 413 by an independent testing agency.

C. Steel Framing: Metal thicknesses indicated are minimum thickness selected to meet structural design criteria for non-structural, interior partitions. Where metal framing manufacturer’s published Product Data recommends a greater thickness for the condition indicated, provide metal framing in recommended thickness.

1. Lateral Load: 5 lbs/sq. ft.
2. Maximum Allowable Deflection:

a. Typical Partitions: L/240.
b. Partitions with Tile Finishes: L/480.

2.02 FRAMING SYSTEMS

A. Framing Members, General: Comply with ASTM C 754 for conditions indicated.

1. Steel Sheet Components: Comply with ASTM C 645 requirements for metal unless otherwise indicated.
2. Protective Coating: ASTM A 653/A 653M, G60, hot-dip galvanized unless otherwise indicated.

B. Studs and Tracks: ASTM C 645.

1. Steel Studs and Tracks:

a. Manufacturers: Subject to compliance with requirements, available manufacturers offering products that may be incorporated into the Work include, but are not limited to the following:

1) CEMCO; California Expanded Metal Products Co.
2) ClarkDietrich.
3) Marino\WARE.
4) SCAFCO Steel Stud Company; Stone Group of Companies.
5) Steel Network, Inc. (The).
6) Telling Industries.

b. Minimum Base-Metal Thickness: 0.0179 inch.

C. Slip-Type Head Joints: Where indicated, provide the following:

1. Single Long-Leg Track System: ASTM C 645 top track with 2-inch-deep flanges in thickness not less than indicated for studs, installed with studs friction fit into top track and with continuous bridging located within 12 inches of the top of studs to provide lateral bracing.
2. Double-Track System: ASTM C 645 top outer tracks, inside track with 2-inch-deep flanges in thickness not less than indicated for studs and fastened to studs, and outer track sized to friction-fit over inner track.

D. Firestop Tracks: Top track manufactured to allow partition heads to expand and contract with movement of structure while maintaining continuity of fire-resistance-rated assembly indicated; in thickness not less than indicated for studs and in width to accommodate depth of studs.

1. Manufacturers: Subject to compliance with requirements, available manufacturers offering products that may be incorporated into the Work include, but are not limited to the following:

a. ClarkDietrich.
b. Fire Trak Corp.
c. MarinoWARE.
d. SCAFCO Steel Stud Company.

e. The Steel Network, Inc.

E. Flat Strap and Backing Plate: Steel sheet for blocking and bracing in length and width indicated.
1. Minimum Base-Metal Thickness: As indicated on Drawings but not less than 0.052 inch.

F. Cold-Rolled Channel Bridging: Steel, 0.0538-inch minimum base-metal thickness, with minimum 1/2-inch-wide flanges.
1. Depth: As indicated on Drawings, but not less than 1-1/2 inches.
2. Clip Angle: Not less than 1-1/2 by 1-1/2 inches, 0.068-inch-thick, galvanized steel.

G. Hat-Shaped, Rigid Furring Channels: ASTM C 645.
1. Minimum Base-Metal Thickness: 0.0179 inch.
2. Depth: As indicated on Drawings.

H. Resilient Furring Channels: 1/2-inch-deep, steel sheet members designed to reduce sound transmission.
1. Configuration: Asymmetrical or hat shaped.

I. Cold-Rolled Furring Channels: 0.053-inch uncoated-steel thickness, with minimum 1/2-inch-wide flanges.

1. Depth: 3/4 inch.
2. Furring Brackets: Adjustable, corrugated-edge-type steel sheet with minimum uncoated-steel thickness of 0.0329 inch.
3. Tie Wire: ASTM A 641/A 641M, Class 1 zinc coating, soft temper, 0.062-inch-diameter wire, or double strand of 0.048-inch-diameter wire.

J. Z-Shaped Furring: With slotted or nonslotted web, face flange of 1-1/4 inches, wall attachment flange of 7/8 inch, minimum uncoated-metal thickness of 0.0179 inch, and depth required to fit insulation thickness indicated.

2.03 SUSPENSION SYSTEMS

A. Tie Wire: ASTM A 641/A 641M, Class 1 zinc coating, soft temper, 0.062-inch-diameter wire, or double strand of 0.048-inch-diameter wire.

B. Hanger Attachments to Concrete:

1. Post-Installed Anchors: Fastener systems with an evaluation report acceptable to authorities having jurisdiction, based on ICC-ES AC01 as appropriate for the substrate.

2. Power-Actuated Anchors: Fastener systems with an evaluation report acceptable to authorities having jurisdiction, based on ICC-ES AC70.

C. Wire Hangers: ASTM A 641/A 641M, Class 1 zinc coating, soft temper, 0.16 inch in diameter.

D. Flat Hangers: Steel sheet, 1 by 3/16 inch by length indicated.

E. Grid Suspension System for Gypsum Board Ceilings: ASTM C 645, direct-hung system composed of main beams and cross-furring members that interlock.

1. Manufacturers: Subject to compliance with requirements, available manufacturers offering products that may be incorporated into the Work include, but are not limited to the following:

    a. Armstrong World Industries, Inc.
    b. Chicago Metallic Corporation.
    c. USG Corporation.

2.04 AUXILIARY MATERIALS

A. General: Provide auxiliary materials that comply with referenced installation standards.

1. Fasteners for Steel Framing: Of type, material, size, corrosion resistance, holding power, and other properties required to fasten steel members to substrates.

B. Isolation Strip at Exterior Walls: Provide the following:

1. Foam Gasket: Adhesive-backed, closed-cell vinyl foam strips that allow fastener penetration without foam displacement, 1/8 inch thick, in width to suit steel stud size.

PART 3 - EXECUTION

3.01 EXAMINATION

A. Examine areas and substrates, with Installer present, and including welded hollow-metal frames, cast-in anchors, and structural framing, for compliance with requirements and other conditions affecting performance of the Work.

B. Proceed with installation only after unsatisfactory conditions have been corrected.

3.02 PREPARATION

A. Suspended Assemblies: Coordinate installation of suspension systems with installation of overhead structure to ensure that inserts and other provisions for anchorages to building structure have been installed to receive hangers at spacing required to support the Work and that hangers will develop their full strength.

1. Furnish concrete inserts and other devices indicated to other trades for installation in advance of time needed for coordination and construction.

B. Coordination with Sprayed Fire-Resistive Materials:

1. Before sprayed fire-resistive materials are applied, attach offset anchor plates or ceiling tracks to surfaces indicated to receive sprayed fire-resistive materials. Where offset anchor plates are required, provide continuous plates fastened to building structure not more than 24 inches o.c.
2. After sprayed fire-resistive materials are applied, remove them only to extent necessary for installation of non-load-bearing steel framing. Do not reduce thickness of fire-resistive

materials below that are required for fire-resistance ratings indicated. Protect adjacent fire-resistive materials from damage.

3.03 INSTALLATION, GENERAL

A. Installation Standard: ASTM C 754.

1. Gypsum Board Assemblies: Also comply with requirements in ASTM C 840 that apply to framing installation.

B. Install framing and accessories plumb, square, and true to line, with connections securely fastened.

C. Install supplementary framing, and blocking to support fixtures, equipment services, heavy trim, grab bars, toilet accessories, furnishings, or similar construction.

D. Install bracing at terminations in assemblies.

E. Do not bridge building control and expansion joints with non-load-bearing steel framing members. Frame both sides of joints independently.

3.04 INSTALLING FRAMED ASSEMBLIES

A. Install framing system components according to spacings indicated, but not greater than spacings required by referenced installation standards for assembly types.

B. Install studs so flanges within framing system point in same direction.

C. Install tracks at floors and overhead supports. Extend framing full height to structural supports or substrates above suspended ceilings except where partitions are indicated to terminate at suspended ceilings. Continue framing around ducts that penetrate partitions above ceiling.

1. Slip-Type Head Joints: Where framing extends to overhead structural supports, install to produce joints at tops of framing systems that prevent axial loading of finished assemblies.
2. Door Openings: Screw vertical studs at jambs to jamb anchor clips on door frames; install track section (for cripple studs) at head and secure to jamb studs.

a. Install two studs at each jamb unless otherwise indicated.
b. Install cripple studs at head adjacent to each jamb stud, with a minimum 1/2-inch clearance from jamb stud to allow for installation of control joint in finished assembly.
c. Extend jamb studs through suspended ceilings and attach to underside of overhead structure.

3. Other Framed Openings: Frame openings other than door openings the same as required for door openings unless otherwise indicated. Install framing below sills of openings to match framing required above door heads.

4. Fire-Resistance-Rated Partitions: Install framing to comply with fire-resistance-rated assembly indicated and support closures and to make partitions continuous from floor to underside of solid structure.

   a. Firestop Track: Where indicated, install to maintain continuity of fire-resistance-rated assembly indicated.

5. Sound-Rated Partitions: Install framing to comply with sound-rated assembly indicated.

D. Direct Furring:
1. Attach to concrete or masonry with stub nails, screws designed for masonry attachment, or powder-driven fasteners spaced 24 inches o.c.

E. Z-Shaped Furring Members:

1. Erect insulation, specified in Section 072100 “Thermal Insulation,” vertically and hold in place with Z-shaped furring members spaced 24 inches o.c.
2. Except at exterior corners, securely attach narrow flanges of furring members to wall with concrete stub nails, screws designed for masonry attachment, or powder-driven fasteners spaced 24 inches o.c.
3. At exterior corners, attach wide flange of furring members to wall with short flange extending beyond corner; on adjacent wall surface, screw-attach short flange of furring channel to web of attached channel. At interior corners, space second member no more than 12 inches from corner and cut insulation to fit.

F. Installation Tolerance: Install each framing member so fastening surfaces vary not more than 1/8 inch from the plane formed by faces of adjacent framing.

3.05 INSTALLING CEILING SUSPENSION SYSTEMS

A. Install suspension system components according to spacings indicated, but not greater than spacings required by referenced installation standards for assembly types.

1. Hangers: 48 inches Insert dimension o.c.
2. Carrying Channels (Main Runners): 48 inches o.c.
3. Furring Channels (Furring Members): 24 inches o.c.

B. Isolate suspension systems from building structure where they abut or are penetrated by building structure to prevent transfer of loading imposed by structural movement.

C. Suspend hangers from building structure as follows:

1. Install hangers plumb and free from contact with insulation or other objects within ceiling plenum that are not part of supporting structural or suspension system.

   a. Splay hangers only where required to miss obstructions and offset resulting horizontal forces by bracing, countersplaying, or other equally effective means.

2. Where width of ducts and other construction within ceiling plenum produces hanger spacings that interfere with locations of hangers required to support standard suspension

system members, install supplemental suspension members and hangers in the form of trapezes or equivalent devices.

a. Size supplemental suspension members and hangers to support ceiling loads within performance limits established by referenced installation standards.

3. Wire Hangers: Secure by looping and wire tying, either directly to structures or to inserts, eye screws, or other devices and fasteners that are secure and appropriate for substrate, and in a manner that will not cause hangers to deteriorate or otherwise fail.
4. Flat Hangers: Secure to structure, including intermediate framing members, by attaching to inserts, eye screws, or other devices and fasteners that are secure and appropriate for structure and hanger, and in a manner that will not cause hangers to deteriorate or otherwise fail.
5. Do not attach hangers to steel roof deck.
6. Do not attach hangers to permanent metal forms. Furnish cast-in-place hanger inserts that extend through forms.
7. Do not attach hangers to rolled-in hanger tabs of composite steel floor deck.
8. Do not connect or suspend steel framing from ducts, pipes, or conduit.

D. Fire-Resistance-Rated Assemblies: Wire tie furring channels to supports.

E. Grid Suspension Systems: Attach perimeter wall track or angle where grid suspension systems meet vertical surfaces. Mechanically join main beam and cross-furring members to each other and butt-cut to fit into wall track.

F. Installation Tolerances: Install suspension systems that are level to within 1/8 inch in 12 feet measured lengthwise on each member that will receive finishes and transversely between parallel members that will receive finishes.

END OF SECTION

SECTION 09 24 00
CEMENT PLASTERING

PART 1 - GENERAL

1.01 SUMMARY

A. Section includes:

1. Exterior vertical plasterwork (stucco).
2. Exterior horizontal and nonvertical plasterwork (stucco).

1.02 PREINSTALLATION MEETINGS

A. Preinstallation Conference: Conduct conference at Project site.

1.03 ACTION SUBMITTALS

A. Product Data: For each type of product.

B. Shop Drawings: Show locations and installation of control and expansion joints, including plans, elevations, sections, details of components, and attachments to other work.

C. Samples: For each type of factory-prepared finish coat and for each color and texture specified.

1.04 QUALITY ASSURANCE

A. TBLP Standards: Comply with TBLP's “Lath and Plaster Systems Manual” and with written recommendations for plaster type indicated unless more stringent requirements are specified.

B. Mockups: Build mockups to verify selections made under Sample submittals, to demonstrate aesthetic effects, and to set quality standards for materials and execution.

1. Build mockups for each substrate and finish texture indicated for cement plastering, including accessories.

a. Size: 100 sq. ft. in surface area.

2. Approval of mockups does not constitute approval of deviations from the Contract Documents contained in mockups unless Architect specifically approves such deviations in writing.
3. Subject to compliance with requirements, approved mockups may become part of the completed Work if undisturbed at time of Substantial Completion.

1.05 DELIVERY, STORAGE, AND HANDLING

A. Store materials inside under cover, and keep them dry and protected against damage from weather, moisture, direct sunlight, surface contamination, corrosion, construction traffic, and other causes.

1.06 FIELD CONDITIONS

A. Comply with ASTM C 926 requirements.

B. Exterior Plasterwork:

1. Apply and cure plaster to prevent plaster drying out during curing period. Use procedures required by climatic conditions, including moist curing, providing coverings, and providing barriers to deflect sunlight and wind.
2. Apply plaster when ambient temperature is greater than 40 deg F.
3. Protect plaster coats from freezing for not less than 48 hours after set of plaster coat has occurred.

C. Factory-Prepared Finishes: Comply with manufacturer's written recommendations for environmental conditions for applying finishes.

PART 2 - PRODUCTS

2.01 PERFORMANCE REQUIREMENTS

A. Fire-Resistance Ratings: Where indicated, provide cement plaster assemblies identical to those of assemblies tested for fire resistance according to ASTM E 119 by a qualified testing agency.

2.02 METAL LATH

A. Expanded-Metal Lath: ASTM C 847, cold-rolled carbon-steel sheet with ASTM A 653/A 653M, G60, hot-dip galvanized-zinc coating.

1. Manufacturers: Subject to compliance with requirements, available manufacturers offering products that may be incorporated into the Work include, but are not limited to the following:

   a. Alabama Metal Industries Company; a Gibraltar Industries company.
   b. CEMCO; California Expanded Metal Products Co.
   c. ClarkDietrich Building Systems.
   d. MarinoWARE.

2. Diamond-Mesh Lath: Flat or self-furring as indicated, 3.4 lb/sq. yd.

B. Paper Backing: FS UU-B-790a, Type I, Grade B, Style 1a vapor-retardant paper.

1. Provide paper-backed lath unless otherwise indicated at exterior locations.

2.03 ACCESSORIES

A. General: Comply with ASTM C 1063, and coordinate depth of trim and accessories with thicknesses and number of plaster coats required.

B. Metal Accessories:

1. Manufacturers: Subject to compliance with requirements, available manufacturers offering products that may be incorporated into the Work include, but are not limited to the following:

   a. Alabama Metal Industries Company; a Gibraltar Industries company.
   b. CEMCO; California Expanded Metal Products Co.
   c. ClarkDietrich Building Systems.
   d. MarinoWARE.

2. Foundation Weep Screed: Fabricated from hot-dip galvanized-steel sheet, ASTM A 653/A 653M, G60 zinc coating.
3. External- (Outside-) Corner Reinforcement: Fabricated from metal lath with ASTM A 653/A 653M, G60, hot-dip galvanized-zinc coating.
4. Cornerbeads: Fabricated from zinc.

   a. Smallnose cornerbead with expanded flanges; use unless otherwise indicated.
   b. Smallnose cornerbead with perforated flanges; use on curved corners.

5. Casing Beads: Fabricated from zinc; square-edged style; with expanded flanges.
6. Control Joints: Fabricated from zinc; one-piece-type, folded pair of unperforated screeds in M-shaped configuration; with perforated flanges and removable protective tape on plaster face of control joint.
7. Two-Piece Expansion Joints: Fabricated from zinc; formed to produce slip-joint and square-edged reveal that is adjustable from 1/4 to 5/8 inch wide; with perforated flanges.

2.04 MISCELLANEOUS MATERIALS

A. Water for Mixing and Finishing Plaster: Potable and free of substances capable of affecting plaster set or of damaging plaster, lath, or accessories.

B. Fiber for Base Coat: Alkaline-resistant glass or polypropylene fibers, 1/2 inch long, free of contaminants, manufactured for use in cement plaster.

C. Fasteners for Attaching Metal Lath to Substrates: ASTM C 1063.

D. Wire: ASTM A 641/A 641M, Class 1 zinc coating, soft temper, not less than 0.0475-inch diameter unless otherwise indicated.

2.05 PLASTER MATERIALS

A. Portland Cement: ASTM C 150/C 150M, Type I or Type II.

   1. Color for Finish Coats: White.

B. Lime: ASTM C 206, Type S; or ASTM C 207, Type S.

C. Sand Aggregate: ASTM C 897.

   1. Color for Job-Mixed Finish Coats: White.

D. Perlite Aggregate: ASTM C 35.

E. Acrylic-Based Finish Coatings: Factory-mixed acrylic-emulsion coating systems formulated with colorfast mineral pigments and fine aggregates; for use over cement plaster base coats. Include manufacturer's recommended primers and sealing topcoats for acrylic-based finishes.

1. Basis of Design: Design is based on STO Corp. “Elastomeric Flexible Skimcoat 80213 sand finish.” Subject to compliance with requirements, available manufacturers offering products that may be incorporated into the Work include, but are not limited to the following:

a. Dryvit Systems, Inc.
b. El Rey Stucco Solutions; a Parex USA, Inc. brand.
c. Stuc-O-Flex International, Inc.

2. Color: As selected by Architect from manufacturer's full range.

2.06 PLASTER MIXES

A. General: Comply with ASTM C 926 for applications indicated.

1. Fiber Content: Add fiber to base-coat mixes after ingredients have mixed at least two minutes. Comply with fiber manufacturer's written instructions for fiber quantities in mixes, but do not exceed 1 lb of fiber/cu. yd. of cementitious materials.

B. Portland Cement Mixes for Scratch and Brown Coats: For cementitious material, mix 1 part portland cement and 1/4 to 1/2 parts lime. Use 3-1/2 to 4-1/2 parts aggregate per part of cementitious material (sum of separate volumes of each component material).

C. Job-Mixed Finish-Coat Mixes: Portland cement mix consisting of 1 part portland cement and 1-1/2 to 2 parts lime. Use 1-1/2 to 3 parts aggregate per part of cementitious material.

D. Factory-Prepared Finish-Coat Mixes: For acrylic-based finish coatings, comply with manufacturer's written instructions.

PART 3 - EXECUTION

3.01 EXAMINATION

A. Examine substrates and conditions, with Installer present, for compliance with requirements for installation tolerances and other conditions affecting performance of the Work.

B. Proceed with installation only after unsatisfactory conditions have been corrected.

3.02 PREPARATION

A. Protect adjacent work from soiling, spattering, moisture deterioration, and other harmful effects caused by plastering.

B. Prepare smooth, solid substrates for plaster according to ASTM C 926.

3.03 INSTALLATION, GENERAL

A. Fire-Resistance-Rated Assemblies: Install components according to requirements for design designations from listing organization and publication indicated on Drawings.

3.04 INSTALLING METAL LATH

A. Metal Lath: Install according to ASTM C 1063.

1. Flat-Ceiling and Horizontal Framing: Install flat-diamond-mesh lath.
2. On Solid Surfaces, Not Otherwise Furred: Install self-furring, diamond-mesh lath.

3.05 INSTALLING ACCESSORIES

A. Install according to ASTM C 1063 and at locations indicated on Drawings.

B. Reinforcement for External (Outside) Corners:

1. Install cornerbead at exterior locations.

C. Control Joints: Locate as approved by Architect for visual effect and as follows:

1. As required to delineate plasterwork into areas (panels) of the following maximum sizes:
   a. Vertical Surfaces: 144 sq. ft.
   b. Horizontal and Other Nonvertical Surfaces: 100 sq. ft.
2. At distances between control joints of not greater than 18 feet o.c.
3. As required to delineate plasterwork into areas (panels) with length-to-width ratios of not greater than 2-1/2:1.
4. Where control joints occur in surface of construction directly behind plaster.
5. Where plasterwork areas change dimensions, to delineate rectangular-shaped areas (panels) and to relieve the stress that occurs at the corner formed by the dimension change.

3.06 PLASTER APPLICATION

A. General: Comply with ASTM C 926.

1. Do not deviate more than plus or minus 1/4 inch in 10 feet from a true plane in finished plaster surfaces when measured by a 10-foot straightedge placed on surface.
2. Finish plaster flush with metal frames and other built-in metal items or accessories that act as a plaster ground unless otherwise indicated. Where casing bead does not terminate plaster at metal frame, cut base coat free from metal frame before plaster sets and groove finish coat at junctures with metal.
3. Provide plaster surfaces that are ready to receive field-applied finishes indicated.

B. Bonding Compound: Apply on unit masonry substrates for direct application of plaster.

C. Walls; Base-Coat Mixes for Use over Metal Lath: For scratch and brown coats, for three-coat plasterwork with 3/4-inch total thickness, as follows:

1. Portland cement mixes.

D. Ceilings; Base-Coat Mixes for Use over Metal Lath: For scratch and brown coats, for three-coat plasterwork and having 3/4-inch total thickness for metal lath on concrete, as follows:

1. Portland cement mixes.

E. Walls; Base-Coat Mix: For base (scratch) coat, for two-coat plasterwork and having 3/8-inch thickness on masonry, as follows:

1. Portland cement mix.

F. Plaster Finish Coats on Soffits and Ceilings: Apply job-mixed finish coat with textured finish to match Architect's sample.

G. Acrylic-Based Finish Coatings on Walls: Apply coating system, including primers, finish coats, and sealing topcoats, according to manufacturer's written instructions.

H. Concealed Exterior Plasterwork: Where plaster application is used as a base for adhered finishes, omit finish coat.

3.07 PLASTER REPAIRS

A. Repair or replace work to eliminate cracks, dents, blisters, buckles, crazing and check cracking, dry outs, efflorescence, sweat outs, and similar defects and where bond to substrate has failed.

3.08 CLEANING AND PROTECTION

A. Remove temporary protection and enclosure of other work after plastering is complete. Promptly remove plaster from door frames, windows, and other surfaces not indicated to be plastered. Repair floors, walls, and other surfaces stained, marred, or otherwise damaged during plastering.

END OF SECTION

SECTION 09 29 00
GYPSUM BOARD

PART 1 - GENERAL

1.01 SUMMARY

A. Section includes:

1. Interior gypsum board.
2. Exterior gypsum board for ceilings and soffits.
3. Tile backing panels.

B. Related Sections include:

1. Section 061600 “Sheathing” for gypsum sheathing for exterior walls.
2. Section 079219 “Acoustical Joint Sealants” for acoustical joint sealants installed in gypsum board assemblies.
3. Section 092116.23 “Gypsum Board Shaft Wall Assemblies” for metal shaft-wall framing, gypsum shaft liners, and other components of shaft-wall assemblies.
4. Section 092216 “Non-Structural Metal Framing” for non-structural steel framing and suspension systems that support gypsum board panels.
5. Section 093013 “Ceramic Tiling” for cementitious backer units installed as substrates for ceramic tile.

1.02 ACTION SUBMITTALS

A. Product Data: For the following: For each type of product.

B. Samples: For the following products:

1. Gypsum Board: Panels, 12 inches square, for each type indicated.
2. Trim Accessories: Full-size Sample in 12-inch-long length for each trim accessory indicated.
3. Textured Finishes: Manufacturer's standard size for each textured finish indicated and on same backing indicated for Work.

C. Samples for Initial Selection: For each type of trim accessory and textured finish indicated.

D. Samples for Verification: For the following products:

1. Trim Accessories: Full-size Sample in 12-inch-long length for each trim accessory indicated.
2. Textured Finishes: Manufacturer's standard size for each textured finish indicated and on same backing indicated for Work.

1.03 QUALITY ASSURANCE

A. Mockups: Build mockups of at least 100 sq. ft. in surface area to demonstrate aesthetic effects and to set quality standards for materials and execution.

1. Build mockups for the following:

a. Each level of gypsum board finish indicated for use in exposed locations.
b. Each texture finish indicated.

2. Apply or install final decoration indicated, including painting and wallcoverings, on exposed surfaces for review of mockups.
3. Simulate finished lighting conditions for review of mockups.
4. Subject to compliance with requirements, approved mockups may become part of the completed Work if undisturbed at time of Substantial Completion.

1.04 DELIVERY, STORAGE AND HANDLING

A. Store materials inside under cover and keep them dry and protected against weather, condensation, direct sunlight, construction traffic, and other potential causes of damage. Stack panels flat and supported on risers on a flat platform to prevent sagging.

1.05 FIELD CONDITIONS

A. Environmental Limitations: Comply with ASTM C840 requirements or gypsum board manufacturer's written instructions, whichever are more stringent.

B. Do not install paper-faced gypsum panels until installation areas are enclosed and conditioned.

C. Do not install panels that are wet, moisture damaged, and mold damaged.

1. Indications that panels are wet or moisture damaged include, but are not limited to, discoloration, sagging, or irregular shape.
2. Indications that panels are mold damaged include, but are not limited to, fuzzy or splotchy surface contamination and discoloration.

PART 2 - PRODUCTS

2.01 PERFORMANCE REQUIREMENTS

A. Fire-Resistance-Rated Assemblies: For fire-resistance-rated assemblies, provide materials and construction identical to those tested in assembly indicated according to ASTM E119 by an independent testing agency.

B. STC-Rated Assemblies: For STC-rated assemblies, provide materials and construction identical to those tested in assembly indicated according to ASTM E90 and classified according to ASTM E413 by an independent testing agency.

2.02 GYPSUM BOARD, GENERAL

A. Size: Provide maximum lengths and widths available that will minimize joints in each area and that correspond with support system indicated.

2.03 INTERIOR GYPSUM BOARD

A. Gypsum Board, Type X: ASTM C1396/C1396M.

1. Manufacturers: Subject to compliance with requirements, available manufacturers offering products that may be incorporated into the Work include, but are not limited to the following:

a. American Gypsum.
b. Certainteed; SAINT-GOBAIN.
c. Continental Building Products Inc.
d. Georgia-Pacific Gypsum LLC.
e. National Gypsum Company.
f. PABCO Gypsum.
g. USG Corporation.

2. Thickness: 5/8 inch.
3. Long Edges: Tapered and featured (rounded or beveled) for prefilling.

B. Gypsum Ceiling Board: ASTM C1396/C1396M.

1. Manufacturers: Subject to compliance with requirements, available manufacturers offering products that may be incorporated into the Work include, but are not limited to the following:

a. American Gypsum.
b. Certainteed; SAINT-GOBAIN.
c. Continental Building Products Inc.
d. Georgia-Pacific Gypsum LLC.
e. National Gypsum Company.
f. PABCO Gypsum.
g. USG Corporation.

2. Thickness: 1/2 inch.
3. Long Edges: Tapered.

2.04 TILE BACKING PANELS

A. Glass-Mat, Water-Resistant Backing Board: ASTM C1178/C1178M, with manufacturer's standard edges.

1. Manufacturers: Subject to compliance with requirements, available manufacturers offering products that may be incorporated into the Work include, but are not limited to the following:

a. Certainteed; SAINT-GOBAIN.
b. Georgia-Pacific Gypsum LLC.
c. National Gypsum Company.
d. USG Corporation.

2. Core: 1/2 inch, regular type.
3. Mold Resistance: ASTM D3273, score of 10 as rated according to ASTM D3274.

B. Cementitious Backer Units: ANSI A118.9 and ASTM C1288 or ASTM C1325, with manufacturer's standard edges.

1. Manufacturers: Subject to compliance with requirements, available manufacturers offering products that may be incorporated into the Work include, but are not limited to the following:

a. C-Cure.
b. Certainteed; SAINT-GOBAIN.
c. Custom Building Products.
d. James Hardie Building Products, Inc.
e. National Gypsum Company.
f. USG Corporation.

2. Thickness: 1/2 inch.
3. Mold Resistance: ASTM D3273, score of 10 as rated according to ASTM D3274.

C. Water-Resistant Gypsum Backing Board: ASTM C1396/C1396M, with manufacturer's standard edges.

1. Manufacturers: Subject to compliance with requirements, available manufacturers offering products that may be incorporated into the Work include, but are not limited to the following:

a. C-Cure.
b. Certainteed; SAINT-GOBAIN.
c. Custom Building Products.
d. James Hardie Building Products, Inc.
e. National Gypsum Company.
f. USG Corporation.

2. Core: 1/2 inch, regular type.

2.05 TRIM ACCESSORIES

A. Interior Trim: ASTM C1047.

1. Material: Galvanized or aluminum-coated steel sheet, rolled zinc, plastic, or paper-faced galvanized-steel sheet.
2. Shapes:

a. Cornerbead.

b. Bullnose bead.
c. LC-Bead: J-shaped; exposed long flange receives joint compound.
d. L-Bead: L-shaped; exposed long flange receives joint compound.
e. U-Bead: J-shaped; exposed short flange does not receive joint compound.
f. Expansion (control) joint.
g. Curved-Edge Cornerbead: With notched or flexible flanges.
h. Base-of-Wall Galvanized Moisture Barrier Trim: Galvanized-steel sheet, 2 inches high.

B. Exterior Trim: ASTM C1047.

1. Material: Hot-dip galvanized-steel sheet, plastic, or rolled zinc.
2. Shapes:

a. Cornerbead.
b. LC-Bead: J-shaped; exposed long flange receives joint compound.
c. Expansion (Control) Joint: One-piece, rolled zinc with V-shaped slot and removable strip covering slot opening.

C. Aluminum Trim: Extruded accessories of profiles and dimensions indicated.

1. Manufacturers: Subject to compliance with requirements, available manufacturers offering products that may be incorporated into the Work include, but are not limited to the following:

a. Fry Reglet Corporation.
b. Gordon Incorporated.
c. Pittcon Industries.

2. Aluminum: Alloy and temper with not less than the strength and durability properties of ASTM B221, Alloy 6063-T5.
3. Finish: Corrosion-resistant primer compatible with joint compound and finish materials specified.

2.06 JOINT TREATMENT MATERIALS

A. General: Comply with ASTM C475/C475M.

B. Joint Tape:

1. Interior Gypsum Board: Paper.
2. Exterior Gypsum Soffit Board: Paper.
3. Glass-Mat Gypsum Sheathing Board: 10-by-10 glass mesh.
4. Tile Backing Panels: As recommended by panel manufacturer.

C. Joint Compound for Interior Gypsum Board: For each coat, use formulation that is compatible with other compounds applied on previous or for successive coats.

1. Prefilling: At open joints, rounded or beveled panel edges, and damaged surface areas, use setting-type taping compound.

2. Embedding and First Coat: For embedding tape and first coat on joints, fasteners, and trim flanges, use setting-type taping compound.

3. Fill Coat: For second coat, use setting-type, sandable topping compound.
4. Finish Coat: For third coat, use setting-type, sandable topping compound.

D. Joint Compound for Exterior Applications:

1. Exterior Gypsum Soffit Board: Use setting-type taping compound and setting-type, sandable topping compound.
2. Glass-Mat Gypsum Sheathing Board: As recommended by sheathing board manufacturer.

E. Joint Compound for Tile Backing Panels:

1. Glass-Mat, Water-Resistant Backing Panel: As recommended by backing panel manufacturer.
2. Cementitious Backer Units: As recommended by backer unit manufacturer.
3. Water-Resistant Gypsum Backing Board: Use setting-type taping compound and setting-type, sandable topping compound.

2.07 AUXILIARY MATERIALS

A. Provide auxiliary materials that comply with referenced installation standards and manufacturer's written instructions.

B. Laminating Adhesive: Adhesive or joint compound recommended for directly adhering gypsum panels to continuous substrate.

C. Steel Drill Screws: ASTM C1002 unless otherwise indicated.

1. Use screws complying with ASTM C954 for fastening panels to steel members from 0.033 to 0.112 inch thick.
2. For fastening cementitious backer units, use screws of type and size recommended by panel manufacturer.

D. Sound-Attenuation Blankets: ASTM C665, Type I (blankets without membrane facing) produced by combining thermosetting resins with mineral fibers manufactured from glass, slag wool, or rock wool.

1. Fire-Resistance-Rated Assemblies: Comply with mineral-fiber requirements of assembly.

E. Acoustical Sealant: As specified in Division 07 Section “Acoustical Joint Sealants.”

F. Thermal Insulation: As specified in Division 07 Section “Thermal Insulation.”

PART 3 - EXECUTION

3.01 EXAMINATION

A. Examine areas and substrates including welded hollow-metal frames and support framing, with Installer present, for compliance with requirements and other conditions affecting performance of the Work.

B. Examine panels before installation. Reject panels that are wet, moisture damaged, and mold damaged.

C. Proceed with installation only after unsatisfactory conditions have been corrected.

3.02 INSTALLATION AND FINISHING OF PANELS, GENERAL

A. Comply with ASTM C840.

B. Install ceiling panels across framing to minimize the number of abutting end joints and to avoid abutting end joints in central area of each ceiling. Stagger abutting end joints of adjacent panels not less than one framing member.

C. Install panels with face side out. Butt panels together for a light contact at edges and ends with not more than 1/16 inch of open space between panels. Do not force into place.

D. Locate edge and end joints over supports, except in ceiling applications where intermediate supports or gypsum board back-blocking is provided behind end joints. Do not place tapered edges against cut edges or ends. Stagger vertical joints on opposite sides of partitions. Do not make joints other than control joints at corners of framed openings.

E. Form control and expansion joints with space between edges of adjoining gypsum panels.

F. Cover both faces of support framing with gypsum panels in concealed spaces (above ceilings, etc.), except in chases braced internally.

1. Unless concealed application is indicated or required for sound, fire, air, or smoke ratings, coverage may be accomplished with scraps of not less than 8 sq. ft. in area.
2. Fit gypsum panels around ducts, pipes, and conduits.
3. Where partitions intersect structural members projecting below underside of floor/roof slabs and decks, cut gypsum panels to fit profile formed by structural members; allow 1/4- to 3/8-inch-wide joints to install sealant.

G. Isolate perimeter of gypsum board applied to non-load-bearing partitions at structural abutments. Provide 1/4- to 1/2-inch-wide spaces at these locations and trim edges with edge trim where edges of panels are exposed. Seal joints between edges and abutting structural surfaces with acoustical sealant.

H. Attachment to Steel Framing: Attach panels so leading edge or end of each panel is attached to open (unsupported) edges of stud flanges first.

I. STC-Rated Assemblies: Seal construction at perimeters, behind control joints, and at openings and penetrations with a continuous bead of acoustical sealant. Install acoustical sealant at both faces of partitions at perimeters and through penetrations. Comply with ASTM C919 and with manufacturer's written instructions for locating edge trim and closing off sound-flanking paths around or through assemblies, including sealing partitions above acoustical ceilings.

J. Install sound attenuation blankets before installing gypsum panels unless blankets are readily installed after panels have been installed on one side.

3.03 INSTALLATION OF INTERIOR GYPSUM BOARD

A. Install interior gypsum board as indicated of Drawings.

B. Single-Layer Application:

1. On ceilings, apply gypsum panels before wall/partition board application to greatest extent possible and at right angles to framing unless otherwise indicated.
2. On partitions/walls, apply gypsum panels vertically (parallel to framing) unless otherwise indicated or required by fire-resistance-rated assembly, and minimize end joints.

a. Stagger abutting end joints not less than one framing member in alternate courses of panels.
b. At stairwells and other high walls, install panels horizontally unless otherwise indicated or required by fire-resistance-rated assembly.

3. On Z-shaped furring members, apply gypsum panels vertically (parallel to framing) with no end joints. Locate edge joints over furring members.
4. Fastening Methods: Apply gypsum panels to supports with steel drill screws.

C. Multilayer Application:

1. On ceilings, apply gypsum board indicated for base layers before applying base layers on walls/partitions; apply face layers in same sequence. Apply base layers at right angles to framing members and offset face-layer joints one framing member, 16 inches minimum, from parallel base-layer joints, unless otherwise indicated or required by fire-resistance-rated assembly.
2. On partitions/walls, apply gypsum board indicated for base layers and face layers vertically (parallel to framing) with joints of base layers located over stud or furring member and face-layer joints offset at least one stud or furring member with base-layer joints unless otherwise indicated or required by fire-resistance-rated assembly. Stagger joints on opposite sides of partitions.
3. On Z-shaped furring members, apply base layer vertically (parallel to framing) and face layer either vertically (parallel to framing) or horizontally (perpendicular to framing) with vertical joints offset at least one furring member. Locate edge joints of base layer over furring members.
4. Fastening Methods: Fasten base layers and face layers separately to supports with screws.

D. Laminating to Substrate: Where gypsum panels are indicated as directly adhered to a substrate (other than studs, joists, furring members, or base layer of gypsum board), comply with gypsum board manufacturer's written instructions and temporarily brace or fasten gypsum panels until fastening adhesive has set.

E. Curved Surfaces:

1. Install panels horizontally (perpendicular to supports) and unbroken, to extent possible, across curved surface plus 12-inch-long straight sections at ends of curves and tangent to them.
2. For double-layer construction, fasten base layer to studs with screws 16 inches o.c. Center gypsum board face layer over joints in base layer, and fasten to studs with screws spaced 12 inches o.c.

3.04 INSTALLATION OF EXTERIOR GYPSUM PANELS FOR CEILINGS AND SOFFITS

A. Apply panels perpendicular to supports, with end joints staggered and located over supports.

1. Install with 1/4-inch open space where panels abut other construction or structural penetrations.
2. Fasten with corrosion-resistant screws.

3.05 INSTALLATION OF TILE BACKING PANELS

A. Glass-Mat, Water-Resistant Backing Panels: Comply with manufacturer's written installation instructions and install at locations indicated to receive tile. Install with 1/4-inch gap where panels abut other construction or penetrations.

B. Cementitious Backer Units: ANSI A108.11, at locations indicated to receive tile.

C. Water-Resistant Backing Board: Install where indicated with 1/4-inch gap where panels abut other construction or penetrations.

D. Where tile backing panels abut other types of panels in same plane, shim surfaces to produce a uniform plane across panel surfaces.

3.06 INSTALLATION OF TRIM ACCESSORIES

A. General: For trim with back flanges intended for fasteners, attach to framing with same fasteners used for panels. Otherwise, attach trim according to manufacturer's written instructions.

B. Control Joints: Install control joints at locations indicated on Drawings if not indicated according to ASTM C840 and in specific locations approved by Architect for visual effect.

C. Interior Trim: Install in the following locations:

1. Cornerbead: Use at outside corners.
2. LC-Bead: Use at exposed panel edges.
3. L-Bead: Use where indicated.
4. U-Bead: Use at exposed panel edges where indicated.

D. Exterior Trim: Install in the following locations:

1. Cornerbead: Use at outside corners.
2. LC-Bead: Use at exposed panel edges.

E. Aluminum Trim: Install in locations indicated on Drawings.

3.07 FINISHING GYPSUM BOARD

A. General: Treat gypsum board joints, interior angles, edge trim, control joints, penetrations, fastener heads, surface defects, and elsewhere as required to prepare gypsum board surfaces for decoration. Promptly remove residual joint compound from adjacent surfaces.

B. Prefill open joints, rounded or beveled edges, and damaged surface areas.

C. Apply joint tape over gypsum board joints, except for trim products specifically indicated as not intended to receive tape.

D. Gypsum Board Finish Levels: Finish panels to levels indicated below and according to ASTM C840:

1. Level 1: Ceiling plenum areas, concealed areas, and where indicated.
2. Level 2: Panels that are substrate for tile.
3. Level 5: Any areas exposed to view.

   a. Primer and its application to surfaces are specified in Section 099123 “Interior Painting.”

E. Glass-Mat Gypsum Sheathing Board: Finish according to manufacturer's written instructions for use as exposed soffit board.

F. Glass-Mat Faced Panels: Finish according to manufacturer's written instructions.

G. Cementitious Backer Units: Finish according to manufacturer's written instructions.

3.08 PROTECTION

A. Protect adjacent surfaces from drywall compound and promptly remove from floors and other non-drywall surfaces. Repair surfaces stained, marred, or otherwise damaged during drywall application.

B. Protect installed products from damage from weather, condensation, direct sunlight, construction, and other causes during remainder of the construction period.

C. Remove and replace panels that are wet, moisture damaged, and mold damaged.

1. Indications that panels are wet or moisture damaged include, but are not limited to, discoloration, sagging, or irregular shape.

2. Indications that panels are mold damaged include, but are not limited to, fuzzy or splotchy surface contamination and discoloration.

END OF SECTION

SECTION 09 30 13
CERAMIC TILING

PART 1 - GENERAL

1.01 SUMMARY

A. Section includes:

1. Porcelain tile.
2. Thresholds.
3. Waterproof membranes.
4. Crack isolation membranes.

B. Related Sections include:

1. Section 079200 "Joint Sealants" for sealing of expansion, contraction, control, and isolation joints in tile surfaces.
2. Section 092900 "Gypsum Board" for cementitious backer units and glass-mat, water-resistant backer board.

1.02 DEFINITIONS

A. General: Definitions in the ANSI A108 series of tile installation standards and in ANSI A137.1 apply to Work of this Section unless otherwise specified.

B. Face Size: Actual tile size, excluding spacer lugs.

C. Module Size: Actual tile size plus joint width indicated.

1.03 PREINSTALLATION MEETINGS

A. Preinstallation Conference: Conduct conference at Project site. Review requirements in ANSI A108.01 for substrates and for preparation by other trades.

1.04 ACTION SUBMITTALS

A. Product Data: For each type of product.

B. Shop Drawings: Show locations of each type of tile and tile pattern. Show widths, details, and locations of expansion, contraction, control, and isolation joints in tile substrates and finished tile surfaces.

C. Samples for Initial Selection: For tile, grout, and accessories involving color selection.

D. Samples for Verification:

1. Full-size units of each type and composition of tile and for each color and finish required. For ceramic mosaic tile in color blend patterns, provide full sheets of each color blend.
2. Assembled samples mounted on a rigid panel, with grouted joints, for each type and composition of tile and for each color and finish required. Make samples at least 18 inches square, but not fewer than four tiles. Use grout of type and in color or colors approved for completed Work.
3. Full-size units of each type of trim and accessory for each color and finish required.
4. Stone thresholds in 6-inch lengths.

1.05 INFORMATIONAL SUBMITTALS

A. Qualification Data: For Installer.

B. Product Certificates: For each type of product.

1.06 MAINTENANCE MATERIAL SUBMITTALS

A. Furnish extra materials that match and are from same production runs as products installed and that are packaged with protective covering for storage and identified with labels describing contents.

1. Tile and Trim Units: Furnish quantity of full-size units equal to 3 percent of amount installed for each type, composition, color, pattern, and size indicated.
2. Grout: Furnish quantity of grout equal to 3 percent of amount installed for each type, composition, and color indicated.

1.07 QUALITY ASSURANCE

A. Installer Qualifications.

B. Mockups: Build mockups to verify selections made under Sample submittals and to demonstrate aesthetic effects and set quality standards for materials and execution.

1.08 DELIVERY, STORAGE, AND HANDLING

A. Deliver and store packaged materials in original containers with seals unbroken and labels intact until time of use. Comply with requirements in ANSI A137.1 for labeling tile packages.

B. Store tile and cementitious materials on elevated platforms, under cover, and in a dry location.

C. Store aggregates where grading and other required characteristics can be maintained and contamination can be avoided.

D. Store liquid materials in unopened containers and protected from freezing.

1.09 FIELD CONDITIONS

A. Environmental Limitations: Do not install tile until construction in spaces is complete and ambient temperature and humidity conditions are maintained at the levels indicated in referenced standards and manufacturer's written instructions.

PART 2 - PRODUCTS

2.01 MANUFACTURERS

A. Source Limitations for Tile: Obtain tile of each type and color or finish from single source or producer.

B. Source Limitations for Setting and Grouting Materials: Obtain ingredients of a uniform quality for each mortar, adhesive, and grout component from single manufacturer and each aggregate from single source or producer.

1. Obtain setting and grouting materials, except for unmodified Portland cement and aggregate, from single manufacturer.
2. Obtain waterproof membrane and crack isolation membrane, except for sheet products, from manufacturer of setting and grouting materials.

C. Source Limitations for Other Products: Obtain each of the following products specified in this Section from a single manufacturer:

1. Stone thresholds.
2. Waterproof membrane.
3. Crack isolation membrane.
4. Cementitious backer units.

2.02 PRODUCTS, GENERAL

A. ANSI Ceramic Tile Standard: Provide tile that complies with ANSI A137.1 for types, compositions, and other characteristics indicated.

1. Provide tile complying with Standard grade requirements unless otherwise indicated.

B. ANSI Standards for Tile Installation Materials: Provide materials complying with ANSI A108.02, ANSI standards referenced in other Part 2 articles, ANSI standards referenced by TCNA installation methods specified in tile installation schedules, and other requirements specified.

C. Factory Blending: For tile exhibiting color variations within ranges, blend tile in factory and package so tile units taken from one package show same range in colors as those taken from other packages and match approved Samples.

D. Mounting: For factory-mounted tile, provide back- or edge-mounted tile assemblies as standard with manufacturer unless otherwise indicated.

1. Where tile is indicated for installation [**in swimming pools**] [**on exteriors**] [**or**] [**in wet areas**], do not use back- or edge-mounted tile assemblies unless tile manufacturer specifies in writing that this type of mounting is suitable for installation indicated and has a record of successful in-service performance.

2.03 TILE PRODUCTS

A. Basis of Design: As indicated on Drawings.

B. Trim Units: Provide trim units for all tile types. Coordinated with color, shade and sizes and coursing of adjoining flat tile where applicable and matching characteristics of adjoining flat tile. Provide shapes as follows, selected from manufacturer's standard shapes:
   1. Coved base for thinset mortar applications.
   2. Surface bullnose wainscot cap for thinset mortar installations.
   3. Internal Corners: Field-butted square corners. For coved base and cap use angle pieces designed to fit with stretcher shapes.

2.04 THRESHOLDS

A. General: Fabricate to sizes and profiles indicated or required to provide transition between adjacent floor finishes.

   1. Bevel edges at 1:2 slope, with lower edge of bevel aligned with or up to 1/16 inch above adjacent floor surface. Finish bevel to match top surface of threshold. Limit height of threshold to 1/2 inch or less above adjacent floor surface.

2.05 TILE BACKING PANELS

A. Cementitious Backer Units: As specified in Division 09 Section “Gypsum Board.”

B. Water-Resistant Gypsum Backing Board: As specified in Division 09 Section “Gypsum Board.”

C. Glass-Mat, Water-Resistant Gypsum Panel: As specified in Division 09 Section “Gypsum Board.”

2.06 WATERPROOF MEMBRANES

A. General: Manufacturer's standard product that complies with ANSI A118.10 and is recommended by the manufacturer for the application indicated. Include reinforcement and accessories recommended by manufacturer.

B. Waterproof Membrane, Fabric-Reinforced, Fluid-Applied: System consisting of liquid-latex rubber or elastomeric polymer and continuous fabric reinforcement.

   1. Manufacturers: Subject to compliance with requirements, available manufacturers offering products that may be incorporated into the Work include, but are not limited to the following:

a. Custom Building Products.
b. Laticrete International, Inc.
c. MAPEI Corporation.
d. Merkrete; a Parex USA, Inc. brand.
e. Southern Grouts & Mortars, Inc.

2.07 CRACK ISOLATION MEMBRANES

A. General: Manufacturer's standard product that complies with ANSI A118.12 for high performance and is recommended by the manufacturer for the application indicated. Include reinforcement and accessories recommended by manufacturer.

B. Crack Isolation Membrane, Fabric-Reinforced, Fluid-Applied: System consisting of liquid-latex rubber or elastomeric polymer and fabric reinforcement.

1. Manufacturers: Subject to compliance with requirements, available manufacturers offering products that may be incorporated into the Work include, but are not limited to the following:

a. Custom Building Products.
b. Laticrete International, Inc.
c. MAPEI Corporation.
d. Parex USA, Inc.
e. Southern Grouts & Mortars, Inc.

2.08 SETTING MATERIALS

A. Portland Cement Mortar (Thickset) Installation Materials: ANSI A108.02.

1. Reinforcing Wire Fabric: Galvanized, welded-wire fabric, 2 by 2 inches by 0.062-inch diameter; comply with ASTM A185/A185M and ASTM A82/A82M, except for minimum wire size.

2. Latex Additive: Manufacturer's standard acrylic resin or styrene-butadiene-rubber water emulsion, serving as replacement for part or all of gaging water, of type specifically recommended by latex-additive manufacturer for use with field-mixed portland cement and aggregate mortar bed.

B. Modified Dry-Set Mortar (Thinset): ANSI A118.4.

1. Manufacturers: Subject to compliance with requirements, available products that may be incorporated into the Work include, but are not limited to the following:

a. ARDEX Americas.
b. C-Cure.
c. Custom Building Products.
d. Laticrete International, Inc.
e. MAPEI Corporation.
f. Parex USA, Inc.
g. Southern Grouts & Mortars, Inc.

2. Provide prepackaged, dry-mortar mix containing dry, redispersible, vinyl acetate or acrylic additive to which only water must be added at Project site.
3. For wall applications, provide mortar that complies with requirements for nonsagging mortar in addition to the other requirements in ANSI A118.4.

2.09 GROUT MATERIALS

A. Water-Cleanable Epoxy Grout: ANSI A118.3.

1. Manufacturers: Subject to compliance with requirements, available manufacturers offering products that may be incorporated into the Work include, but are not limited to the following:

a. Atlas Minerals & Chemicals, Inc.
b. C-Cure.
c. Custom Building Products.
d. Laticrete International, Inc.
e. MAPEI Corporation.

B. Grout for Pregrouted Tile Sheets: Same product used in factory to pregrout tile sheets.

2.10 MISCELLANEOUS MATERIALS

A. Trowelable Underlayments and Patching Compounds: Latex-modified, portland cement-based formulation provided or approved by manufacturer of tile-setting materials for installations indicated.

B. Metal Edge Strips: Angle or L-shaped, height to match tile and setting-bed thickness, metallic or combination of metal and PVC or neoprene base, designed specifically for flooring applications; stainless steel, ASTM A276/A276M or ASTM A666, 300 Series exposed-edge material.

1. Manufacturers: Subject to compliance with requirements, available manufacturers offering products that may be incorporated into the Work include, but are not limited to the following:

a. Blanke Corporation.
b. Ceramic Tool Company, Inc.
c. Schluter Systems L.P.

C. Tile Cleaner: A neutral cleaner capable of removing soil and residue without harming tile and grout surfaces, specifically approved for materials and installations indicated by tile and grout manufacturers.

2.11 MIXING MORTARS AND GROUT

A. Mix mortars and grouts to comply with referenced standards and mortar and grout manufacturers' written instructions.

B. Add materials, water, and additives in accurate proportions.

C. Obtain and use type of mixing equipment, mixer speeds, mixing containers, mixing time, and other procedures to produce mortars and grouts of uniform quality with optimum performance characteristics for installations indicated.

PART 3 - EXECUTION

3.01 EXAMINATION

A. Examine substrates, areas, and conditions where tile will be installed, with Installer present, for compliance with requirements for installation tolerances and other conditions affecting performance of the Work.

1. Verify that substrates for setting tile are firm; dry; clean; free of coatings that are incompatible with tile-setting materials, including curing compounds and other substances that contain soap, wax, oil, or silicone; and comply with flatness tolerances required by ANSI A108.01 for installations indicated.
2. Verify that concrete substrates for tile floors installed with thinset mortar comply with surface finish requirements in ANSI A108.01 for installations indicated.

    a. Verify that surfaces that received a steel trowel finish have been mechanically scarified.
    b. Verify that protrusions, bumps, and ridges have been removed by sanding or grinding.

3. Verify that installation of grounds, anchors, recessed frames, electrical and mechanical units of work, and similar items located in or behind tile has been completed.
4. Verify that joints and cracks in tile substrates are coordinated with tile joint locations; if not coordinated, adjust joint locations in consultation with Architect.

B. Proceed with installation only after unsatisfactory conditions have been corrected.

3.02 PREPARATION

A. Fill cracks, holes, and depressions in concrete substrates for tile floors installed with thinset mortar with trowelable leveling and patching compound specifically recommended by tile-setting material manufacturer.

B. Where indicated, prepare substrates to receive waterproof membrane by applying a reinforced mortar bed that complies with ANSI A108.1A and is sloped 1/4 inch per foot toward drains.

C. Blending: For tile exhibiting color variations, verify that tile has been factory blended and packaged so tile units taken from one package show same range of colors as those taken from other packages and match approved Samples. If not factory blended, either return to manufacturer or blend tiles at Project site before installing.

3.03 INSTALLATION OF CERAMIC TILE

A. Comply with TCNA's "Handbook for Ceramic, Glass, and Stone Tile Installation" for TCNA installation methods specified in tile installation schedules. Comply with parts of the ANSI A108 series "Specifications for Installation of Ceramic Tile" that are referenced in TCNA installation methods, specified in tile installation schedules, and apply to types of setting and grouting materials used.

1. For the following installations, follow procedures in the ANSI A108 series of tile installation standards for providing 95 percent mortar coverage:
   a. ile floors in wet areas.
   b. Tile floors consisting of tiles 8 by 8 inches or larger.
   c. Tile floors consisting of rib-backed tiles.

B. Extend tile work into recesses and under or behind equipment and fixtures to form complete covering without interruptions unless otherwise indicated. Terminate work neatly at obstructions, edges, and corners without disrupting pattern or joint alignments.

C. Accurately form intersections and returns. Perform cutting and drilling of tile without marring visible surfaces. Carefully grind cut edges of tile abutting trim, finish, or built-in items for straight aligned joints. Fit tile closely to electrical outlets, piping, fixtures, and other penetrations so plates, collars, or covers overlap tile.

D. Provide manufacturer's standard trim shapes where necessary to eliminate exposed tile edges.

E. Where accent tile differs in thickness from field tile, vary setting-bed thickness so that tiles are flush.

F. Jointing Pattern: Lay tile in grid pattern unless otherwise indicated. Lay out tile work and center tile fields in both directions in each space or on each wall area. Lay out tile work to minimize the use of pieces that are less than half of a tile. Provide uniform joint widths unless otherwise indicated.

1. For tile mounted in sheets, make joints between tile sheets same width as joints within tile sheets so joints between sheets are not apparent in finished work.
2. Where adjoining tiles on floor, base, walls, or trim are specified or indicated to be same size, align joints.
3. Where tiles are specified or indicated to be whole integer multiples of adjoining tiles on floor, base, walls, or trim, align joints unless otherwise indicated.

G. Joint Widths: Unless otherwise indicated, install tile with joint width recommended by tile manufacturer.

H. Lay out tile wainscots to dimensions indicated or to next full tile beyond dimensions indicated.

I. Expansion Joints: Provide expansion joints and other sealant-filled joints, including control, contraction, and isolation joints, where indicated. Form joints during installation of setting materials, mortar beds, and tile. Do not saw-cut joints after installing tiles.

1. Where joints occur in concrete substrates, locate joints in tile surfaces directly above them or apply strip of crack suppression membrane over joints in concrete substrate according to tile manufacturer’s recommendations and adjust exposed joint location as required and as approved by Architect.
2. Prepare joints and apply sealants to comply with requirements in Division 07 Section “Joint Sealants.”

J. Stone Thresholds: Install stone thresholds in same type of setting bed as adjacent floor unless otherwise indicated.

1. At locations where mortar bed (thickset) would otherwise be exposed above adjacent floor finishes, set thresholds in latex-portland cement mortar (thinset).
2. Do not extend waterproof membrane or crack isolation membrane under thresholds set in latex-portland cement mortar (thinset). Fill joints between such thresholds and adjoining tile set on waterproof membrane with elastomeric sealant.

K. Metal Edge Strips: Install where exposed edge of tile flooring meets carpet, wood, or other flooring that finishes flush with or below top of tile and no threshold is indicated.

3.04 INSTALLATION OF TILE BACKING PANELS

A. Install panels and treat joints according to ANSI A108.11 and manufacturer's written instructions for type of application indicated. Use modified dry-set mortar for bonding material unless otherwise directed in manufacturer's written instructions.

3.05 INSTALLATION OF WATERPROOF MEMBRANES

A. Install waterproof membrane to comply with ANSI A108.13 and manufacturer's written instructions to produce waterproof membrane of uniform thickness that is bonded securely to substrate.

B. Allow waterproof membrane to cure and verify by testing that it is watertight before installing tile or setting materials over it.

3.06 INSTALLATION OF CRACK ISOLATION MEMBRANES

A. Install crack isolation membrane to comply with ANSI A108.17 and manufacturer's written instructions to produce membrane of uniform thickness that is bonded securely to substrate.

B. Allow crack isolation membrane to cure before installing tile or setting materials over it.

3.07 ADJUSTING AND CLEANING

A. Remove and replace tile that is damaged or that does not match adjoining tile. Provide new matching units, installed as specified and in a manner to eliminate evidence of replacement.

B. Cleaning: On completion of placement and grouting, clean all ceramic tile surfaces so they are free of foreign matter.

1. Remove grout residue from tile as soon as possible.
2. Clean grout smears and haze from tile according to tile and grout manufacturer's written instructions but no sooner than 10 days after installation. Use only cleaners recommended by tile and grout manufacturers and only after determining that cleaners are safe to use by testing on samples of tile and other surfaces to be cleaned. Protect metal surfaces and plumbing fixtures from effects of cleaning. Flush surfaces with clean water before and after cleaning.

3.08 PROTECTION

A. Protect installed tile work with kraft paper or other heavy covering during construction period to prevent staining, damage, and wear. If recommended by tile manufacturer, apply coat of neutral protective cleaner to completed tile walls and floors.

B. Prohibit foot and wheel traffic from tiled floors for at least seven days after grouting is completed.

C. Before final inspection, remove protective coverings and rinse neutral protective cleaner from tile surfaces.

3.09 INTERIOR CERAMIC TILE INSTALLATION SCHEDULE

A. Interior Floor Installations, Concrete Subfloor:

1. Tile Installation F113: Thin-set mortar; TCA F113.

   a. Tile Type: As scheduled.
   b. Thin-Set Mortar: Latex- portland cement mortar.
   c. Grout: Water-cleanable epoxy grout.

2. Tile Installation F122: Thin-set mortar on waterproof membrane; TCA F122.

   a. Tile Type: As scheduled.
   b. Thin-Set Mortar: Latex- portland cement mortar.
   c. Grout: Water-cleanable epoxy grout.

3. Tile Installation F125A: Thin-set mortar on crack isolation membrane; TCA F125A.

   a. Tile Type: As scheduled.
   b. Thin-Set Mortar: Latex- portland cement mortar.
   c. Grout: Water-cleanable epoxy grout.
   d. Floor Joints: Movement joint design in thinset floors and perimeter joints; TCA EJ171.

B. Interior Wall Installations, Metal Studs or Furring:

1. Tile Installation W245: Thin-set mortar on coated glass-mat, water-resistant gypsum backer board; TCA W245.

    a. Tile Type: As scheduled.
    b. Thin-Set Mortar: Latex- portland cement mortar.
    c. Grout: Water-cleanable epoxy grout.

2. Tile Installation B415: Thinset mortar on air and water barrier membrane over cementitious backer units or fiber-cement backer board; Similar to TCNA B415.

END OF SECTION

SECTION 09 51 13
ACOUSTICAL PANEL CEILINGS

PART 1 - GENERAL

1.01 SUMMARY

A. Section includes acoustical panels and exposed suspension systems for interior ceilings.

B. Products furnished, but not installed under this Section, include anchors, clips, and other ceiling attachment devices to be cast in concrete.

1.02 PREINSTALLATION MEETINGS

A. Preinstallation Conference: Conduct conference at Project site.

1.03 ACTION SUBMITTALS

A. Product Data: For each type of product.

A. Samples for Verification: For each component indicated and for each exposed finish required, prepared on Samples of size indicated below.

1. Acoustical Panel: Set of 6-inch-square Samples of each type, color, pattern, and texture.
2. Exposed Suspension-System Members, Moldings, and Trim: Set of 6-inch-long Samples of each type, finish, and color.

1.04 INFORMATIONAL SUBMITTALS

A. Coordination Drawings: Reflected ceiling plans, drawn to scale, on which the following items are shown and coordinated with each other, using input from installers of the items involved:

1. Ceiling suspension-system members.
2. Structural members to which suspension systems will be attached.
3. Method of attaching hangers to building structure.

   a. Furnish layouts for cast-in-place anchors, clips, and other ceiling attachment devices whose installation is specified in other Sections.

4. Carrying channels or other supplemental support for hanger-wire attachment where conditions do not permit installation of hanger wires at required spacing.
5. Size and location of initial access modules for acoustical panels.
6. Items penetrating finished ceiling and ceiling-mounted items including the following:

   a. Lighting fixtures.

b. Diffusers.
c. Grilles.
d. Speakers.
e. Sprinklers.
f. Access panels.
g. Perimeter moldings.

1.05 CLOSEOUT SUBMITTALS

A. Maintenance Data: For finishes to include in maintenance manuals.

1.06 MAINTENANCE MATERIAL SUBMITTALS

A. Furnish extra materials that match products installed and that are packaged with protective covering for storage and identified with labels describing contents.

1. Acoustical Ceiling Units: Full-size panels equal to 2 percent of quantity installed.

1.07 DELIVERY, STORAGE, AND HANDLING

A. Deliver acoustical panels, suspension-system components, and accessories to Project site and store them in a fully enclosed, conditioned space where they will be protected against damage from moisture, humidity, temperature extremes, direct sunlight, surface contamination, and other causes.

B. Before installing acoustical panels, permit them to reach room temperature and a stabilized moisture content.

1.08 FIELD CONDITIONS

A. Environmental Limitations: Do not install acoustical panel ceilings until spaces are enclosed and weathertight, wet-work in spaces is complete and dry, work above ceilings is complete, and ambient temperature and humidity conditions are maintained at the levels indicated for Project when occupied for its intended use.

PART 2 - PRODUCTS

2.01 MANUFACTURERS

A. Source Limitations: Obtain each type of acoustical ceiling panel and its supporting suspension system from single source from single manufacturer.

2.02 PERFORMANCE REQUIREMENTS

A. Surface-Burning Characteristics: Comply with ASTM E 84; testing by a qualified testing agency. Identify products with appropriate markings of applicable testing agency.

1. Flame-Spread Index: Class A according to ASTM E 1264.
2. Smoke-Developed Index: 450 or less.

2.03 ACOUSTICAL PANELS

A. Manufacturers: Subject to compliance with requirements, available manufacturers offering products that may be incorporated into the Work include, but are not limited to the following:

1. Armstrong World Industries, Inc.
2. CertainTeed Corporation.
3. Rockfon (Roxul Inc.).
4. USG Corporation.

B. General:

1. Source Limitations:

   a. Acoustical Ceiling Panel: Obtain each type from single source from single manufacturer.
   b. Suspension System: Obtain each type from single source from single manufacturer.

2. Source Limitations: Obtain each type of acoustical ceiling panel and supporting suspension system from single source from single manufacturer.
3. Glass-Fiber-Based Panels: Made with binder containing no urea formaldehyde.
4. Acoustical Panel Standard: Unless otherwise indicated, provide manufacturer's standard panels of configuration indicated that comply with ASTM E 1264 classifications as designated by types, patterns, acoustical ratings, and light reflectances unless otherwise indicated.

   a. Mounting Method for Measuring NRC: Type E-400; plenum mounting in which face of test specimen is 15-3/4 inches away from test surface according to ASTM E 795.

5. Acoustical Panel Colors and Patterns: Match appearance characteristics indicated for each product type.

   a. Where appearance characteristics of acoustical panels are indicated by referencing pattern designations in ASTM E 1264 and not manufacturers' proprietary product designations, provide products selected by Architect from each manufacturer's full range that comply with requirements indicated for type, pattern, color, light reflectance, acoustical performance, edge detail, and size.

C. Basis of Design: As indicated on Drawings.

2.04 METAL SUSPENSION SYSTEM

A. Manufacturers: Subject to compliance with requirements, available manufacturers offering products that may be incorporated into the Work include, but are not limited to the following:

1. Armstrong World Industries, Inc.
2. CertainTeed Corporation.
3. Chicago Metallic Corporation.
4. USG Corporation.

B. Metal Suspension-System Standard: Provide manufacturer's standard, direct-hung, metal suspension system and accessories according to ASTM C 635/C 635M and designated by type, structural classification, and finish indicated.

A. General:

1. Metal Suspension-System Standard: Provide manufacturer's standard direct-hung metal suspension systems of types, structural classifications, and finishes indicated that comply with applicable requirements in ASTM C 635/C 635M.
2. Attachment Devices: Size for five times the design load indicated in ASTM C 635/C 635M, Table 1, "Direct Hung," unless otherwise indicated. Comply with seismic design requirements.
3. Wire Hangers, Braces, and Ties: Provide wires complying with the following requirements:

    a. Zinc-Coated, Carbon-Steel Wire: ASTM A 641/A 641M, Class 1 zinc coating, soft temper.
    b. Size: Select wire diameter so its stress at three times hanger design load (ASTM C 635/C 635M, Table 1, "Direct Hung") will be less than yield stress of wire, but provide not less than 0.106-inch-diameter wire.

4. Hanger Rods: Mild steel, zinc coated or protected with rust-inhibitive paint.

B. Metal Suspension System:

1. Manufacturers: Design is based on products by CertainTeed Corporation. Subject to compliance with requirements, available manufacturers offering products that may be incorporated into the Work include, but are not limited to the following:

    a. Armstrong World Industries, Inc.
    b. Chicago Metallic Corporation.
    c. United States Gypsum Company.

2. Wide-Face, Capped, Double-Web, Steel Suspension System: Main and cross runners roll formed from cold-rolled steel sheet; prepainted, electrolytically zinc coated, or hot-dip galvanized according to ASTM A 653/A 653M, not less than G30 coating designation; with prefinished 15/16-inch-wide metal caps on flanges.

   a. Structural Classification: Intermediate-duty system.
   b. End Condition of Cross Runners: Override (stepped) or butt-edge type.
   c. Face Design: Flat, flush.
   d. Cap Material:

      1) Typical: Aluminum sheet.

   e. Cap Finish: Painted white..

2.05 ACCESSORIES

A. Attachment Devices: Size for five times the design load indicated in ASTM C 635/C 635M, Table 1, “Direct Hung,” unless otherwise indicated. Comply with seismic design requirements.

B. Wire Hangers, Braces, and Ties: Provide wires as follows:

1. Zinc-Coated, Carbon-Steel Wire: ASTM A 641/A 641M, Class 1 zinc coating, soft temper.
2. Size: Wire diameter sufficient for its stress at three times hanger design load (ASTM C 635/C 635M, Table 1, “Direct Hung”) will be less than yield stress of wire, but not less than 0.106-inch- diameter wire.

C. Hanger Rods: Mild steel, zinc coated or protected with rust-inhibitive paint.

D. Hold-Down Clips: Manufacturer's standard hold-down.

E. Impact Clips: Manufacturer's standard impact-clip system designed to absorb impact forces against acoustical panels.

2.06 METAL EDGE MOLDINGS AND TRIM

A. Manufacturers: Subject to compliance with requirements, available manufacturers offering products that may be incorporated into the Work include, but are not limited to the following:

1. Armstrong World Industries, Inc.
2. CertainTeed Corporation.
3. Chicago Metallic Corporation.
4. Fry Reglet Corporation.
5. Gordon, Inc.
6. USG Corporation.

B. Roll-Formed, Sheet-Metal Edge Moldings and Trim: Type and profile indicated or, if not indicated, manufacturer's standard moldings for edges and penetrations that comply with seismic design requirements; formed from sheet metal of same material, finish, and color as that used for exposed flanges of suspension-system runners.

1. Edge moldings shall fit acoustical panel edge details and suspension systems indicated and match width and configuration of exposed runners unless otherwise indicated.
2. For circular penetrations of ceiling, provide edge moldings fabricated to diameter required to fit penetration exactly.

C. Extruded-Aluminum Edge Moldings and Trim: Where indicated, provide manufacturer's extruded-aluminum edge moldings and trim of profile indicated or referenced by manufacturer's designations, including splice plates, corner pieces, and attachment and other clips, complying with seismic design requirements.

1. Clear Anodic Finish: AAMA 611, AA-M12C22A31, Class II, 0.010 mm or thicker.
2. Baked-Enamel or Powder-Coat Finish: Minimum dry film thickness of 1.5 mils. Comply with ASTM C 635/C 635M and coating manufacturer's written instructions for cleaning, conversion coating, and applying and baking finish.

2.07 ACOUSTICAL SEALANT

A. Acoustical Sealant: As specified in Section 079219 “Acoustical Joint Sealants.”

PART 3 - EXECUTION

3.01 EXAMINATION

A. Examine substrates, areas, and conditions, including structural framing to which acoustical panel ceilings attach or abut, with Installer present, for compliance with requirements specified in this and other Sections that affect ceiling installation and anchorage and with requirements for installation tolerances and other conditions affecting performance of acoustical panel ceilings.

B. Examine acoustical panels before installation. Reject acoustical panels that are wet, moisture damaged, or mold damaged.

C. Proceed with installation only after unsatisfactory conditions have been corrected.

3.02 PREPARATION

A. Measure each ceiling area and establish layout of acoustical panels to balance border widths at opposite edges of each ceiling. Avoid using less-than-half-width panels at borders unless otherwise indicated, and comply with layout shown on reflected ceiling plans.

B. Layout openings for penetrations centered on the penetrating items.

3.03 INSTALLATION

A. Install acoustical panel ceilings according to ASTM C 636/C 636M and manufacturer's written instructions.

1. Fire-Rated Assembly: Install fire-rated ceiling systems according to tested fire-rated design.

B. Suspend ceiling hangers from building's structural members and as follows:

1. Install hangers plumb and free from contact with insulation or other objects within ceiling plenum that are not part of supporting structure or of ceiling suspension system.
2. Splay hangers only where required to miss obstructions; offset resulting horizontal forces by bracing, countersplaying, or other equally effective means.
3. Where width of ducts and other construction within ceiling plenum produces hanger spacings that interfere with location of hangers at spacings required to support standard suspension-system members, install supplemental suspension members and hangers in form of trapezes or equivalent devices.
4. Secure wire hangers to ceiling-suspension members and to supports above with a minimum of three tight turns. Connect hangers directly to structure or to inserts, eye screws, or other devices that are secure and appropriate for substrate and that will not deteriorate or otherwise fail due to age, corrosion, or elevated temperatures.
5. Secure flat, angle, channel, and rod hangers to structure, including intermediate framing members, by attaching to inserts, eye screws, or other devices that are secure and appropriate for both the structure to which hangers are attached and the type of hanger involved. Install hangers in a manner that will not cause them to deteriorate or fail due to age, corrosion, or elevated temperatures.
6. Do not support ceilings directly from permanent metal forms or floor deck. Fasten hangers to cast-in-place hanger inserts, postinstalled mechanical or adhesive anchors, or power-actuated fasteners that extend through forms into concrete.
7. When steel framing does not permit installation of hanger wires at spacing required, install carrying channels or other supplemental support for attachment of hanger wires.
8. Do not attach hangers to steel deck tabs.
9. Do not attach hangers to steel roof deck. Attach hangers to structural members.
10. Space hangers not more than 48 inches o.c. along each member supported directly from hangers unless otherwise indicated; provide hangers not more than 8 inches from ends of each member.
11. Size supplemental suspension members and hangers to support ceiling loads within performance limits established by referenced standards.

C. Secure bracing wires to ceiling suspension members and to supports with a minimum of four tight turns. Suspend bracing from building's structural members as required for hangers, without attaching to permanent metal forms, steel deck, or steel deck tabs. Fasten bracing wires into concrete with cast-in-place or postinstalled anchors.

D. Install edge moldings and trim of type indicated at perimeter of acoustical ceiling area and where necessary to conceal edges of acoustical panels.

1. Apply acoustical sealant in a continuous ribbon concealed on back of vertical legs of moldings before they are installed.

2. Screw attach moldings to substrate at intervals not more than 16 inches o.c. and not more than 3 inches from ends. Miter corners accurately and connect securely.
3. Do not use exposed fasteners, including pop rivets, on moldings and trim.

E. Install suspension-system runners so they are square and securely interlocked with one another. Remove and replace dented, bent, or kinked members.

F. Install acoustical panels with undamaged edges and fit accurately into suspension-system runners and edge moldings. Scribe and cut panels at borders and penetrations to provide precise fit.

1. For square-edged panels, install panels with edges fully hidden from view by flanges of suspension-system runners and moldings.

3.04 CLEANING

A. Clean exposed surfaces of acoustical panel ceilings, including trim, edge moldings, and suspension-system members. Comply with manufacturer's written instructions for cleaning and touchup of minor finish damage.

B. Remove and replace ceiling components that cannot be successfully cleaned and repaired to permanently eliminate evidence of damage.

END OF SECTION

SECTION 09 51 63
ACOUSTICAL BAFFLE CEILINGS

PART 1 - GENERAL

1.01 SUMMARY

A. Section includes acoustical ceilings composed of vertical baffles or blades.

1.02 PREINSTALLATION MEETINGS

A. Preinstallation Conference: Conduct conference at Project site.

1.03 ACTION SUBMITTALS

A. Product Data: For each type of product.

B. Samples for Verification: For each component indicated and for each exposed finish required, prepared on Samples of size indicated below.

1. Acoustical Baffles: Set of 6-inch-square Samples of each type, color, pattern, and texture.
2. Exposed Suspension-System Members, Moldings, and Trim: Set of 6-inch-long Samples of each type, finish, and color.

1.04 CLOSEOUT SUBMITTALS

A. Maintenance Data: For finishes to include in maintenance manuals.

1.05 MAINTENANCE MATERIAL SUBMITTALS

A. Furnish extra materials that match products installed and that are packaged with protective covering for storage and identified with labels describing contents.

1. Acoustical Baffle Units: Three unopened cartons of full-size panels for each type of product installed.

1.06 QUALITY ASSURANCE

A. Mockups: Build mockups to verify selections made under sample submittals and to demonstrate aesthetic effects and set quality standards for materials and execution.

1. Build mockup of typical ceiling area as directed by Architect.
2. Subject to compliance with requirements, approved mockups may become part of the completed Work if undisturbed at time of Substantial Completion.

1.07 DELIVERY, STORAGE, AND HANDLING

A. Deliver acoustical panels, suspension-system components, and accessories to Project site in original, unopened packages and store them in a fully enclosed, conditioned space where they will be protected against damage from moisture, humidity, temperature extremes, direct sunlight, surface contamination, and other causes.

B. Before installing acoustical panels, permit them to reach room temperature and a stabilized moisture content.

C. Handle acoustical panels carefully to avoid chipping edges or damaging units in any way.

1.08 FIELD CONDITIONS

A. Environmental Limitations: Do not install acoustical panel ceilings until spaces are enclosed and weatherproof, wet work in spaces is complete and dry, work above ceilings is complete, and ambient temperature and humidity conditions are maintained at the levels indicated for Project when occupied for its intended use.

1.09 WARRANTY

A. Special Warranty: Installer agrees to repair or replace suspended acoustical panel ceiling installations that fail in materials or workmanship within specified warranty period.

1. Failures include, but are not limited to panels that sag, warp, shrink, buckle, as a result of manufacturing defects.
2. Warranty Period: 5 years from date of Substantial Completion.

PART 2 - PRODUCTS

2.01 PERFORMANCE REQUIREMENTS

A. Surface-Burning Characteristics: Comply with ASTM E 84; testing by a qualified testing agency. Identify products with appropriate markings of applicable testing agency.

1. Flame-Spread Index: Comply with ASTM E 1264 for Class A materials.
2. Smoke-Developed Index: 450 or less.

2.02 ACOUSTICAL PANELS

A. Source Limitations: Obtain each type of acoustical baffle unit and supporting suspension system from single source from single manufacturer.

B. Basis of Design: Design is based on Alights, "Absorb VSN". Subject to compliance with requirements, provide named product or comparable product approved by Architect manufactured.

C. Description: Non-woven layered and formed polyethylene terephalate (PET) felt fiber with soft surface texture individually suspended.

1. Color: As indicated on Drawings.
2. Edge/Joint Detail: Square.
3. Thickness: 3/8 inch.
4. Modular Size: As indicated on Drawings.

5. NRC: 0.75.
6. Finish: As selected by Architect.

2.03 METAL SUSPENSION SYSTEMS

A. Aircraft Cable: Stainless steel wire rope, 1/16 inch thick, with fittings to adjust length and accessories for securing to building structure.

PART 3 - EXECUTION

3.01 EXAMINATION

A. Examine substrates, areas, and conditions, including structural framing to which acoustical panel ceilings attach or abut, with Installer present, for compliance with requirements specified in this and other Sections that affect ceiling installation and anchorage and with requirements for installation tolerances and other conditions affecting performance of acoustical panel ceilings.

B. Examine acoustical panels before installation. Reject acoustical panels that are wet, moisture damaged, or mold damaged.

C. Proceed with installation only after unsatisfactory conditions have been corrected.

3.02 PREPARATION

A. Measure each ceiling area and establish layout of acoustical panels to balance border widths at opposite edges of each ceiling. Avoid using less-than-half-width panels at borders, and comply with layout shown on reflected ceiling plans.

3.03 INSTALLATION

A. General: Install acoustical panel ceilings to comply with ASTM C 636/C 636M, according to manufacturer's written instructions and CISCA's “Ceiling Systems Handbook.”

B. Suspend ceiling hangers from building's structural members and as follows:

1. Install hangers plumb and free from contact with insulation or other objects within ceiling plenum that are not part of supporting structure or of ceiling suspension system.
2. Splay hangers only where required to miss obstructions; offset resulting horizontal forces by bracing, countersplaying, or other equally effective means.
3. Where width of ducts and other construction within ceiling plenum produces hanger spacings that interfere with location of hangers at spacings required to support standard suspension-system members, install supplemental suspension members and hangers in form of trapezes or equivalent devices.
4. Secure wire hangers to ceiling-suspension members and to supports above with a minimum of three tight turns. Connect hangers directly either to structures or to inserts, eye screws, or other devices that are secure and appropriate for substrate and that will not deteriorate or otherwise fail due to age, corrosion, or elevated temperatures.
5. Secure flat, angle, channel, and rod hangers to structure, including intermediate framing members, by attaching to inserts, eye screws, or other devices that are secure and

appropriate for both the structure to which hangers are attached and the type of hanger involved. Install hangers in a manner that will not cause them to deteriorate or fail due to age, corrosion, or elevated temperatures.

6. Do not support ceilings directly from permanent metal forms or floor deck. Fasten hangers to cast-in-place hanger inserts, postinstalled mechanical or adhesive anchors, or power-actuated fasteners that extend through forms into concrete.
7. When steel framing does not permit installation of hanger wires at spacing required, install carrying channels or other supplemental support for attachment of hanger wires.
8. Do not attach hangers to steel deck tabs.
9. Do not attach hangers to steel roof deck. Attach hangers to structural members.
10. Space hangers not more than 48 inches o.c. along each member supported directly from hangers unless otherwise indicated; provide hangers not more than 8 inches from ends of each member.
11. Install wire hanger at each corner of each light fixture (4 total).
12. Size supplemental suspension members and hangers to support ceiling loads within performance limits established by referenced standards and publications.

C. Secure bracing wires to ceiling suspension members and to supports with a minimum of four tight turns. Suspend bracing from building's structural members as required for hangers, without attaching to permanent metal forms, steel deck, or steel deck tabs. Fasten bracing wires into concrete with cast-in-place or postinstalled anchors.

D. Install edge moldings and trim of type indicated at perimeter of acoustical ceiling area and where necessary to conceal edges of acoustical panels.

1. Apply acoustical sealant in a continuous ribbon concealed on back of vertical legs of moldings before they are installed.
2. Screw attach moldings to substrate at intervals not more than 16 inches o.c. and not more than 3 inches from ends, leveling with ceiling suspension system to a tolerance of 1/8 inch in 12 feet. Miter corners accurately and connect securely.
3. Do not use exposed fasteners, including pop rivets, on moldings and trim.

E. Install acoustical panels with undamaged edges and fit accurately into suspension-system runners and edge moldings. Scribe and cut panels at borders and penetrations to provide a neat, precise fit.

3.04 CLEANING

A. Clean exposed surfaces of acoustical panel ceilings, including trim, edge moldings, and suspension-system members. Comply with manufacturer's written instructions for cleaning and touchup of minor finish damage. Remove and replace ceiling components that cannot be successfully cleaned and repaired to permanently eliminate evidence of damage.

END OF SECTION

SECTION 09 54 24
LINEAR WOOD CEILINGS

PART 1 - GENERAL

1.01 SUMMARY

A. Section includes:

1. Linear wood ceiling system.
2. Concealed attachment system for linear wood ceiling system.
3. Trim and accessories.

B. Related Sections include Division 23 and 26 sections for mechanical and electrical fixtures Installed in acoustical ceilings.

1.02 PRE-INSTALLATION MEETING

A. Pre-Installation Conference: Conduct conference at Project site.

1.03 ACTION SUBMITTALS

A. Product Data: For each type of product specified.

B. Samples For Verificatgion:

1. Linear Wood Components: For verification of each type of exposed finish required, prepared on samples of size indicated below. Where finishes involve normal color and texture variations, include sample sets showing the range of variations expected.

a. 16-inch long samples of each linear wood member type, pattern, and color.

1.04 INFORMATIONAL SUBMITTALS

A. Coordination Drawings: Reflected ceiling plans, drawn to scale, on which the following items are shown and coordinated with each other, using input from installers of the items involved:

1. Structural members to which systems will be attached.
2. Method of attaching hangers to building structure.
3. Size and location of initial access modules.
4. Items penetrating finished ceiling and ceiling-mounted items including the following:

a. Lighting fixtures.
b. Diffusers.
c. Grilles.
d. Speakers.
e. Sprinklers.
f. Access panels.
g. Perimeter moldings.

5. Show operation of hinged and sliding components covered by or adjacent to woot tiles.
6. Minimum Drawing Scale: 1/8 inch = 1 foot.

1.05 MAINTENANCE MATERIAL SUBMITTALS

A. Extra Materials: Furnish extra materials described below that match products installed, are packaged with protective covering for storage, and are identified with labels clearly describing contents.

1. Wood Ceiling Components: Furnish quantity of full-size units equal to 2.0 percent of amount installed.

1.06 QUALITY ASSURANCE

A. Installer Qualifications: Engage an experienced Installer, approved by wood ceiling manufacturer, with in-house Shop Drawing capabilities, in-house assembly and finishing capabilities, and with resources to provide products of consistent quality in appearance and physical properties without delaying the project, and who has completed linear wood ceilings similar in species, design, and extent to that indicated for this Project and with a record of successful in-service performance.

B. Mockups: Build mockups to verify selections made under Sample submittals, to demonstrate aesthetic effects, and to set quality standards for materials and execution.

1. Build mockup of typical ceiling area of 100 sq. ft. as directed by Architect.
2. Approval of mockups does not constitute approval of deviations from the Contract Documents contained in mockups unless Architect specifically approves such deviations in writing.
3. Subject to compliance with requirements, approved mockups may become part of the completed Work if undisturbed at time of Substantial Completion.

1.07 PROJECT CONDITIONS

A. Space Enclosure and Environmental Limitations: Do not install linear wood ceilings until spaces are enclosed and weatherproof, wet-work in spaces is completed and dry, work above ceilings is complete, and ambient temperature and humidity conditions are being maintained at the levels indicated for Project when occupied for its intended use.

1.08 DELIVERY, STORAGE, AND HANDLING

A. Delivery and Unloading: Coordinate crate sizes, weights, unloading options, and delivery schedule with manufacturer prior to fabrication. Deliver linear wood components and suspension system components to Project site in original, unopened packages and store them in a fully enclosed space where they will be protected against damage from moisture, direct sunlight, surface contamination, and other mistreatment.

B. Acclimatization: Before installing linear wood ceilings, allow them to reach room temperature and a stabilized moisture content per AWI standards, but not less than 72 hours.

C. Handling: Handle linear wood ceiling components carefully to avoid chipping edges or damaging units in any way.

PART 2 - PRODUCTS

2.01 MANUFACTURERS

A. Single-Source Responsibility for Wood Ceiling System: Obtain each type of linear wood ceiling components from a single fabricator.

2.02 PERFORMANCE REQUIREMENTS

A. Surface-Burning Characteristics: Comply with ASTM E 84; testing by a qualified testing agency. Identify products with appropriate markings of applicable testing agency.

1. Flame-Spread Index: Class A according to ASTM E 1264.
2. Smoke-Developed Index: 50 or less.

2.03 LINEAR WOOD CEILINGS

A. Basis of Design: Design is based on Fishtnk Design Factory, Aaline, "CRS-GR Wood Slat Ceiling System." Subject to compliance with requirements, provide named product or comparable product approved by Architect.

1. Species: White Oak.
2. Member Size: 3/4 x 6 inches high.
3. Edge Profile: 1- by 6-inch profile perpendicular to slats at outside face of system only.
4. Finish: White Oak.
5. Fabric: Black.

2.04 MISCELLANEOUS MATERIALS

A. Subframing: Of type recommended by manufacturer.

B. Fasteners: Nails, screws, and other anchoring devices of type, size, material, and finish as recommended by manufacturer and required for application indicated to provide secure attachment, concealed where possible.

PART 3 - EXECUTION

3.01 EXAMINATION

A. Examine substrates, with Installer present, for compliance with requirements for installation tolerances and other conditions affecting performance.

B. Examine linear wood ceiling components before installation. Reject linear wood ceiling components that are wet, moisture damaged, or mold damaged.

C. Proceed with installation only after unsatisfactory conditions have been corrected.

3.02 PREPARATION

A. Layout: Measure each ceiling area and establish the layout of linear wood ceiling systems to balance border widths at opposite edges of each ceiling. Avoid using less-than-half-width members at borders, and conform to the layout shown on reflected ceiling plans in accordance with wood ceiling manufacturer’s approved Shop Drawings.

3.03 INSTALLATION

A. General: Install linear wood ceilings according to manufacturer's instructions.

B. Attachments: Attach sub framing to building's structural members per manufacturer’s instructions and in compliance with all local codes and regulations.

C. Installation of Linear Wood Ceilings: Install linear wood ceilings in accordance with manufacturer’s installation instructions and in compliance with all local codes and regulations. Install with undamaged edges and fitted accurately to subframing system. Scribe and cut wood at borders and penetrations to provide a neat, precise fit, as required.

D. Install manufacturer’s trim pieces at exposed perimeter.

3.04 CLEANING

A. General: Clean exposed wood surfaces of linear wood ceilings. Comply with manufacturer's instructions for cleaning and touchup of minor finish damage. Remove and replace linear wood ceiling components that cannot be successfully cleaned and repaired to permanently eliminate evidence of damage.

END OF SECTION

SECTION 09 65 13
RESILIENT BASE AND ACCESSORIES

PART 1 - GENERAL

1.01 SUMMARY

A. Section includes:

1. Resilient base.
2. Resilient molding accessories.

1.02 ACTION SUBMITTALS

A. Product Data: For each type of product.

B. Samples for Initial Selection: For each type of product indicated.

C. Samples for Verification: For each type of product indicated and for each color, texture, and pattern required in manufacturer's standard-size Samples, but not less than 12 inches long.

D. Product Schedule: For resilient base and accessory products. Use same designations indicated on Drawings.

1.03 MAINTENANCE MATERIAL SUBMITTALS

A. Furnish extra materials that match products installed and that are packaged with protective covering for storage and identified with labels describing contents.

1. Furnish not less than 10 linear feet for every 500 linear feet or fraction thereof, of each type, color, pattern, and size of resilient product installed.

1.04 QUALITY ASSURANCE

A. Mockups: Build mockups to verify selections made under Sample submittals and to demonstrate aesthetic effects and set quality standards for materials and execution.

1. Coordinate mockups in this Section with mockups specified in other Sections.

1.05 DELIVERY, STORAGE, AND HANDLING

A. Store resilient products and installation materials in dry spaces protected from the weather, with ambient temperatures maintained within range recommended by manufacturer, but not less than 50 deg F or more than 90 deg F.

1.06 FIELD CONDITIONS

A. Maintain ambient temperatures within range recommended by manufacturer, but not less than 70 deg F or more than 95 deg F, in spaces to receive resilient products during the following time periods:

1. 48 hours before installation.
2. During installation.
3. 48 hours after installation.

B. After installation and until Substantial Completion, maintain ambient temperatures within range recommended by manufacturer, but not less than 55 deg F or more than 95 deg F.

C. Install resilient products after other finishing operations, including painting, have been completed.

1.07 WARRANTY

A. Special Installer's Warranty: Installer agrees to repair or replace resilient base installations that fail in workmanship within specified warranty period.

1. Failures include, but are not limited to, delamination from substrate.
2. Warranty includes costs for replacement materials and installation.
3. Warranty Period: 3 years from date of Substantial Completion.

PART 2 - PRODUCTS

2.01 THERMOSET-RUBBER BASE

A. Manufacturers: Subject to compliance with requirements, available manufacturers offering products that may be incorporated into the Work include, but are not limited to the following:

1. Flexco.
2. Johnsonite; a Tarkett company.
3. Roppe Corporation.

B. Product Standard: ASTM F1861, Type TV (vinyl, thermoplastic).

1. Group: I (solid, homogeneous).

2. Style: Style A, Straight

C. Minimum Thickness: 0.125 inch.

D. Height: 4 inches.

E. Lengths: Cut lengths 48 inches long or coils in manufacturer's standard length.

F. Outside Corners: Job formed.

G. Inside Corners: Job formed.

2.02 RESILIENT MOLDING ACCESSORY

A. Manufacturers: Basis of Design is products by Roppe Corporation, USA. Subject to compliance with requirements, available manufacturers offering products that may be incorporated into the Work include, but are not limited to the following:

1. Flexco.
2. Johnsonite; a Tarkett company.

B. Description: Resilient carpet edge for glue-down applications, reducer strip for resilient flooring, and joiner for tile and carpet.

C. Profile and Dimensions: As indicated on Drawings.

D. Colors and Patterns: As indicated by manufacturer's designations or if not indicated as selected by Architect from full range of industry colors.

2.03 INSTALLATION MATERIALS

A. Trowelable Leveling and Patching Compounds: Latex-modified, portland cement based or blended hydraulic-cement-based formulation provided or approved by resilient-product manufacturer for applications indicated.

B. Adhesives: Water-resistant type recommended by resilient-product manufacturer for resilient products and substrate conditions indicated.

PART 3 - EXECUTION

3.01 EXAMINATION

A. Examine substrates, with Installer present, for compliance with requirements for maximum moisture content and other conditions affecting performance of the Work.

1. Verify that finishes of substrates comply with tolerances and other requirements specified in other Sections and that substrates are free of cracks, ridges, depressions, scale, and foreign deposits that might interfere with adhesion of resilient products.

B. Proceed with installation only after unsatisfactory conditions have been corrected.

1. Installation of resilient products indicates acceptance of surfaces and conditions.

3.02 PREPARATION

A. Prepare substrates according to manufacturer's written instructions to ensure adhesion of resilient products.

B. Concrete Substrates for Resilient Accessories: Prepare horizontal surfaces according to ASTM F 710.

1. Verify that substrates are dry and free of curing compounds, sealers, and hardeners.
2. Remove substrate coatings and other substances that are incompatible with adhesives and that contain soap, wax, oil, or silicone, using mechanical methods recommended by manufacturer. Do not use solvents.
3. Alkalinity and Adhesion Testing: Perform tests recommended by manufacturer. Proceed with installation only after substrate alkalinity falls within range on pH scale recommended by manufacturer in writing, but not less than 5 or more than 9 pH.
4. Moisture Testing: Proceed with installation only after substrates pass testing according to manufacturer's written recommendations, but not less stringent than the following:

   a. Perform relative humidity test using in situ probes according to ASTM F 2170. Proceed with installation only after substrates have maximum 75 percent relative humidity level.

C. Fill cracks, holes, and depressions in substrates with trowelable leveling and patching compound; remove bumps and ridges to produce a uniform and smooth substrate.

D. Do not install resilient products until they are the same temperature as the space where they are to be installed.

1. At least 48 hours in advance of installation, move resilient products and installation materials into spaces where they will be installed.

E. Immediately before installation, sweep and vacuum clean substrates to be covered by resilient products.

3.03 RESILIENT BASE INSTALLATION

A. Comply with manufacturer's written instructions for installing resilient base.

B. Apply resilient base to walls, columns, pilasters, casework and cabinets in toe spaces, and other permanent fixtures in rooms and areas where base is required.

C. Install resilient base in lengths as long as practical without gaps at seams and with tops of adjacent pieces aligned.

D. Tightly adhere resilient base to substrate throughout length of each piece, with base in continuous contact with horizontal and vertical substrates.

E. Do not stretch resilient base during installation.

F. On masonry surfaces or other similar irregular substrates, fill voids along top edge of resilient base with manufacturer's recommended adhesive filler material.

G. Preformed Corners: Install preformed corners before installing straight pieces.

3.04 RESILIENT ACCESSORY INSTALLATION

A. Comply with manufacturer's written instructions for installing resilient accessories.

B. Resilient Molding Accessories: Butt to adjacent materials and tightly adhere to substrates throughout length of each piece. Install reducer strips at edges of floor covering that would otherwise be exposed.

3.05 CLEANING AND PROTECTION

A. Comply with manufacturer's written instructions for cleaning and protecting resilient products.

B. Perform the following operations immediately after completing resilient-product installation:

1. Remove adhesive and other blemishes from exposed surfaces.
2. Sweep and vacuum horizontal surfaces thoroughly.
3. Damp-mop horizontal surfaces to remove marks and soil.

C. Protect resilient products from mars, marks, indentations, and other damage from construction operations and placement of equipment and fixtures during remainder of construction period.

D. Cover resilient products subject to wear and foot traffic until Substantial Completion.

END OF SECTION

SECTION 09 65 19
RESILIENT TILE FLOORING

PART 1 - GENERAL

1.01 SUMMARY

A. Section includes:

1. Solid vinyl floor tile.

1.02 ACTION SUBMITTALS

A. Product Data: For each type of product.

1. Laboratory Test Reports: For chemical-bonding compounds, indicating compliance with requirements for low-emitting materials.

B. Samples for Verification: Full-size units of each color and pattern of floor tile required.

1. For heat-welding bead, manufacturer's standard-size Samples, but not less than 9 inches long, of each color required.

C. Product Schedule: For floor tile. Use same designations indicated on Drawings.

1.03 INFORMATIONAL SUBMITTALS

A. Qualification Data: For Installer.

1.04 CLOSEOUT SUBMITTALS

A. Maintenance Data: For each type of floor tile to include in maintenance manuals.

1.05 MAINTENANCE MATERIAL SUBMITTALS

A. Furnish extra materials that match products installed and that are packaged with protective covering for storage and identified with labels describing contents.

1.06 QUALITY ASSURANCE

A. Installer Qualifications: An entity that employs installers and supervisors who are competent in techniques required by manufacturer for floor tile installation and seaming method indicated.

1.07 DELIVERY, STORAGE, AND HANDLING

A. Store floor tile and installation materials in dry spaces protected from the weather, with ambient temperatures maintained within range recommended by manufacturer, but not less than 50 deg F or more than 90 deg F. Store floor tiles on flat surfaces.

1.08 FIELD CONDITIONS

A. Maintain ambient temperatures within range recommended by manufacturer, but not less than 70 deg F or more than 95 deg F, in spaces to receive floor tile during the following periods:

1. 48 hours before installation.
2. During installation.
3. 48 hours after installation.

B. After installation and until Substantial Completion, maintain ambient temperatures within range recommended by manufacturer, but not less than 55 deg F or more than 95 deg F.

C. Close spaces to traffic during floor tile installation.

D. Close spaces to traffic for 48 hours after floor tile installation.

E. Install floor tile after other finishing operations, including painting, have been completed.

PART 2 - PRODUCTS

2.01 SOLID VINYL FLOOR TILE

A. Basis of Design: Design is based on products scheduled on Drawings. Subject to compliance with requirements, provide named products or comparable products approved by Architect.

B. Tile Standard: ASTM F 1700.

1. Class: Class III, Printed Film Vinyl Tile.
2. Type: A, Smooth Surface.

C. Minimum Thickness: 0.080 inch.

D. Size: Manufacturer’s standard for product scheduled.

E. Colors and Patterns: As indicated by manufacturer's designations.

2.02 INSTALLATION MATERIALS

A. Trowelable Leveling and Patching Compounds: Latex-modified, portland-cement-based or blended hydraulic-cement-based formulation provided or approved by floor tile manufacturer for applications indicated.

B. Adhesives: Water-resistant type recommended by floor tile and adhesive manufacturers to suit floor tile and substrate conditions indicated.

C. Floor Polish: Provide protective, liquid floor-polish products recommended by floor tile manufacturer.

PART 3 - EXECUTION

3.01 EXAMINATION

A. Examine substrates, with Installer present, for compliance with requirements for maximum moisture content and other conditions affecting performance of the Work.

1. Verify that finishes of substrates comply with tolerances and other requirements specified in other Sections and that substrates are free of cracks, ridges, depressions, scale, and foreign deposits that might interfere with adhesion of floor tile.

B. Proceed with installation only after unsatisfactory conditions have been corrected.

3.02 PREPARATION

A. Prepare substrates according to floor tile manufacturer's written instructions to ensure adhesion of resilient products.

B. Concrete Substrates: Prepare according to ASTM F 710.

1. Verify that substrates are dry and free of curing compounds, sealers, and hardeners.
2. Remove substrate coatings and other substances that are incompatible with adhesives and that contain soap, wax, oil, or silicone, using mechanical methods recommended by floor tile manufacturer. Do not use solvents.
3. Alkalinity and Adhesion Testing: Perform tests recommended by floor tile manufacturer. Proceed with installation only after substrate alkalinity falls within range on pH scale recommended by manufacturer in writing, but not less than 5 or more than 9 pH.
4. Moisture Testing: Perform tests so that each test area does not exceed 200 sq. ft., and perform no fewer than three tests in each installation area and with test areas evenly spaced in installation areas.

   a. Relative Humidity Test: Using in-situ probes, ASTM F 2170. Proceed with installation only after substrates have a maximum 75 percent relative humidity level measurement.

C. Access Flooring Panels: Remove protective film of oil or other coating using method recommended by access flooring manufacturer.

D. Fill cracks, holes, and depressions in substrates with trowelable leveling and patching compound; remove bumps and ridges to produce a uniform and smooth substrate.

E. Do not install floor tiles until materials are the same temperature as space where they are to be installed. At least 48 hours in advance of installation, move resilient floor tile and installation materials into spaces where they will be installed.

F. Immediately before installation, sweep and vacuum clean substrates to be covered by resilient floor tile.

3.03 FLOOR TILE INSTALLATION

A. Comply with manufacturer's written instructions for installing floor tile.

B. Lay out floor tiles from center marks established with principal walls, discounting minor offsets, so tiles at opposite edges of room are of equal width. Adjust as necessary to avoid using cut widths that equal less than one-half tile at perimeter.

C. Match floor tiles for color and pattern by selecting tiles from cartons in the same sequence as manufactured and packaged, if so numbered. Discard broken, cracked, chipped, or deformed tiles.

D. Scribe, cut, and fit floor tiles to butt neatly and tightly to vertical surfaces and permanent fixtures including built-in furniture, cabinets, pipes, outlets, and door frames.

E. Extend floor tiles into toe spaces, door reveals, closets, and similar openings. Extend floor tiles to center of door openings.

F. Maintain reference markers, holes, and openings that are in place or marked for future cutting by repeating on floor tiles as marked on substrates. Use chalk or other nonpermanent marking device.

G. Adhere floor tiles to substrates using a full spread of adhesive applied to substrate to produce a completed installation without open cracks, voids, raising and puckering at joints, telegraphing of adhesive spreader marks, and other surface imperfections.

3.04 CLEANING AND PROTECTION

A. Comply with manufacturer's written instructions for cleaning and protecting floor tile.

B. Perform the following operations immediately after completing floor tile installation:

1. Remove adhesive and other blemishes from surfaces.
2. Sweep and vacuum surfaces thoroughly.
3. Damp-mop surfaces to remove marks and soil.

C. Protect floor tile from mars, marks, indentations, and other damage from construction operations and placement of equipment and fixtures during remainder of construction period.

D. Floor Polish: Remove soil, adhesive, and blemishes from floor tile surfaces before applying liquid floor polish.

1. Apply two coat(s).

E. Cover floor tile until Substantial Completion.

END OF SECTION

SECTION 09 66 23
RESINOUS MATRIX TERRAZZO FLOORING

PART 1 - GENERAL

1.01 SUMMARY

A. Section includes: thin-set, epoxy-resin terrazzo flooring.

B. Related Sections include Division 07 Section “Joint Sealants” for sealants installed with terrazzo.

1.02 PREINSTALLATION MEETINGS

A. Preinstallation Conference: Conduct conference at Project site.

1. Review methods and procedures related to terrazzo including, but not limited to, the following:

a. Inspect and discuss condition of substrate and other preparatory work performed by other trades.
b. Review and finalize construction schedule and verify availability of materials, Installer's personnel, equipment, and facilities needed to make progress and avoid delays.
c. Review special terrazzo designs and patterns.

1.03 ACTION SUBMITTALS

A. Product Data: For each type of product.

B. Shop Drawings: Include terrazzo installation requirements. Include plans, sections, component details, and relationship to other work. Show layout of the following:

1. Divider strips.
2. Control-joint strips.
3. Accessory strips.
4. Abrasive strips.
5. Terrazzo patterns.

C. Samples for Verification: For each type, material, color, and pattern of terrazzo and accessory required showing the full range of color, texture, and pattern variations expected. Label each terrazzo Sample to identify manufacturer's matrix color and aggregate types, sizes, and proportions. Prepare Samples of same thickness and from same material to be used for the Work, in sizes indicated below:

1. Terrazzo: 6-inch- square Samples.

2. Accessories: 6-inch- long Samples of each exposed strip item required.

1.04 INFORMATIONAL SUBMITTALS

A. Qualification Data: For Installer.

B. Material Certificates: For each type of terrazzo material or product.

C. Installer Certificates: Signed by manufacturers certifying that installers comply with requirements.

D. Preinstallation moisture-testing reports.

1.05 CLOSEOUT SUBMITTALS

A. Maintenance Data: For terrazzo to include in maintenance manuals.

1.06 QUALITY ASSURANCE

A. Installer Qualifications:

1. Engage an installer who is a contractor member of NTMA.
2. Engage an installer who is certified in writing by terrazzo manufacturer as qualified to install manufacturer's products.

B. Mockups: Build mockups to verify selections made under Sample submittals, to demonstrate aesthetic effects, and to set quality standards for materials and execution.

1. Build mockups for terrazzo including accessories.

a. Size: Minimum 100 sq. ft. of typical poured-in-place flooring condition for each color and pattern in locations directed by Architect.

2. Approval of mockups does not constitute approval of deviations from the Contract Documents contained in mockups unless Architect specifically approves such deviations in writing.

1.07 DELIVERY, STORAGE, AND HANDLING

A. Deliver materials to Project site in supplier's original wrappings and containers, labeled with source's or manufacturer's name, material or product brand name, and lot number if any.

B. Store materials in their original, undamaged packages and containers, inside a well-ventilated area protected from weather, moisture, soiling, extreme temperatures, and humidity.

1.08 FIELD CONDITIONS

A. Environmental Limitations: Comply with manufacturer's written instructions for substrate temperature, ambient temperature, moisture, ventilation, and other conditions affecting terrazzo installation.

B. Field Measurements: Verify actual dimensions of construction contiguous with precast terrazzo by field measurements before fabrication.

C. Provide permanent lighting or, if permanent lighting is not in place, simulate permanent lighting conditions during terrazzo installation.

D. Close spaces to traffic during terrazzo application and for not less than 24 hours after application unless manufacturer recommends a longer period.

E. Control and collect water and dust produced by grinding operations. Protect adjacent construction from detrimental effects of grinding operations.

PART 2 - PRODUCTS

2.01 MANUFACTURERS

A. Source Limitations: Obtain primary terrazzo materials from single source from single manufacturer. Provide secondary materials including patching and fill material, joint sealant, and repair materials of type and from source recommended by manufacturer of primary materials.

B. Source Limitations for Aggregates: Obtain each color, grade, type, and variety of granular materials from single source with resources to provide materials of consistent quality in appearance and physical properties.

2.02 PERFORMANCE REQUIREMENTS

A. NTMA Standards: Comply with NTMA's written recommendations for terrazzo type indicated unless more stringent requirements are specified.

2.03 EPOXY-RESIN TERRAZZO

A. Epoxy-Resin Terrazzo: Comply with manufacturer's written instructions for matrix and aggregate proportions and mixing.

1. Design is based on products manufactured by Key Resin Company. Subject to compliance with requirements, provide products by named manufacturer or manufacturer of comparable products approved by Architect.

B. Mix Color: As indicated by specified mix design.

C. Mix Color and Pattern: As indicated on Drawings.

D. Materials:

1. Moisture-Vapor-Emission-Control Membrane: Two-component, high-solids, high-density, low-odor, epoxy-based membrane-forming product produced by epoxy terrazzo manufacturer that reduces moisture emission from concrete substrate to not more than 3 lb of water/1000 sq. ft. in 24 hours.
2. Substrate-Crack-Suppression Membrane: Product of terrazzo-resin manufacturer, having minimum 120 percent elongation potential according to ASTM D 412.
3. Primer: Manufacturer's product recommended for substrate and use indicated.
4. Epoxy-Resin Matrix: Manufacturer's standard recommended for use indicated and in color required for mix indicated.

a. Physical Properties without Aggregates:

1) Hardness: 60 to 85 per ASTM D 2240, Shore D.
2) Minimum Tensile Strength: 3000 psi per ASTM D 638 for a 2-inch specimen made using a “C” die per ASTM D 412.
3) Minimum Compressive Strength: 10,000 psi per ASTM D 695, Specimen B cylinder.
4) Chemical Resistance: No deleterious effects by contaminants listed below after seven-day immersion at room temperature per ASTM D 1308.

a) Distilled water.
b) Mineral water.
c) Isopropanol.
d) Ethanol.
e) 0.025 percent detergent solution.
f) 1.0 percent soap solution.
g) 5 percent acetic acid.
h) 10 percent sodium hydroxide.
i) 10 percent hydrochloric acid.
j) 30 percent sulfuric acid.

b. Physical Properties with Aggregates: For terrazzo blended according to manufacturer's recommendations with one part epoxy resin with three parts marble aggregate consisting of 60 percent No. 1 chips and 40 percent No. 0 chips that is ground and grouted to a 1/4-inch nominal thickness, and cured for 7 days at 75 deg F plus or minus 2 deg F and at 50 percent plus or minus 2 percent relative humidity.

1) Flammability: Self-extinguishing, maximum extent of burning 1/4 inch according to ASTM D 635.
2) Thermal Coefficient of Linear Expansion: 0.0025 inch/inch per deg F according to ASTM C 531.

5. Aggregates: Comply with NTMA gradation standards for mix indicated and contain no deleterious or foreign matter.

a. Abrasion and Impact Resistance: Less than 40 percent loss per ASTM C 131/C 131M.
b. 24-Hour Absorption Rate: Less than 0.75 percent.
c. Dust Content: Less than 1.0 percent by weight.

6. Finishing Grout: Resin based.

2.04 STRIP MATERIALS

A. Thin-Set Divider Strips: L-type angle in depth required for topping thickness indicated.

1. Material: Stainless steel.
2. Top Width: As indicated.

B. Heavy-Top Divider Strips: L-type angle in depth required for topping thickness indicated.

1. Bottom-Section Material: Galvanized steel or matching top-section material.
2. Top-Section Material: Stainless steel.
3. Top-Section Width: 1/8 inch unless otherwise indicated.

C. Control-Joint Strips: Separate, double L-type angles, positioned back to back, that match material and color of divider strips and in depth required for topping thickness indicated.

D. Accessory Strips: Match divider-strip width, material, and color unless otherwise indicated. Use the following types of accessory strips as required to provide a complete installation:

1. Base-bead strips for exposed top edge of terrazzo base.
2. Edge-bead strips for exposed edges of terrazzo.

2.05 MISCELLANEOUS ACCESSORIES

A. Strip Adhesive: Epoxy-resin adhesive recommended by adhesive manufacturer for this use.

B. Anchoring Devices:

1. Strips: Provide mechanical anchoring devices or adhesives for strip materials as recommended by manufacturer and as required for secure attachment to substrate.

C. Patching and Fill Material: Terrazzo manufacturer's resinous product approved and recommended by manufacturer for application indicated.

D. Joint Compound: Terrazzo manufacturer's resinous product approved and recommended by manufacturer for application indicated.

E. Resinous Matrix Terrazzo Cleaner: Chemically neutral cleaner with pH factor between 7 and 10 that is biodegradable, phosphate free, and recommended by sealer manufacturer for use on terrazzo type indicated.

F. Sealer: Slip- and stain-resistant, penetrating-type sealer that is chemically neutral; does not affect terrazzo color or physical properties; and is recommended by sealer manufacturer.

1. Surface Friction: Not less than 0.6 according to ASTM D 2047.
2. Acid-Base Properties: With pH factor between 7 and 10.

2.06 TERRAZZO MIXES

A. Epoxy Terrazzo Matrix: In accordance with resin supplier's recommendations

B. Terrazzo Topping: Charge and mix marble chips and epoxy resin in accordance with supplier's instructions.

C. Mix Design:

1. Resin: Key Resin Company KR 100-7006 to match Sherwin Williams 7006 Extra White.
2. Marble Chips: 95 percent China White No. 1 and No. 2.
3. Glass Chips: 5 percent clear glass Nop. 1.

PART 3 - EXECUTION

3.01 EXAMINATION

A. Examine substrates and areas, with Installer present, for compliance with requirements for installation tolerances and other conditions affecting performance of the Work.

B. Proceed with installation only after unsatisfactory conditions, including levelness tolerances, have been corrected.

3.02 PREPARATION

A. Clean substrates of substances, including oil, grease, and curing compounds, that might impair terrazzo bond. Provide clean, dry, and neutral substrate for terrazzo application.

B. Concrete Slabs:

1. Provide sound concrete surfaces free of laitance, glaze, efflorescence, curing compounds, form-release agents, dust, dirt, grease, oil, and other contaminants incompatible with terrazzo.

   a. Shot-blast surfaces with an apparatus that abrades the concrete surface, contains the dispensed shot within the apparatus, and recirculates the shot by vacuum pickup.
   b. Repair damaged and deteriorated concrete according to terrazzo manufacturer's written instructions.
   c. Use patching and fill material to fill holes and depressions in substrates according to terrazzo manufacturer's written instructions.

C. Verify that concrete substrates are dry and moisture-vapor emissions are within acceptable levels according to manufacturer's written instructions.

D. Preinstallation Moisture Testing:

1. Testing Agency: Engage a qualified testing agency to perform tests.
2. Moisture Testing: Perform tests so that each test area does not exceed 200 sq. ft., and perform no fewer than three tests in each installation area and with test areas evenly spaced in installation areas.

a. Moisture-Vapor-Emission Test: Maximum moisture-vapor-emission rate of 3 lb of water/1000 sq. ft. in 24 hours when tested according to ASTM F 1869 using anhydrous calcium chloride.

3. Proceed with terrazzo installation only after concrete substrates pass moisture testing or after installation of moisture-vapor-emission-control membrane on substrate areas that fail testing.

E. Moisture-Vapor-Emission-Control Membrane: Install according to manufacturer's written instructions.

1. Install concrete substrates that fail preinstallation moisture testing.

F. Substrate-Crack-Suppression Membrane: Install to isolate and suppress substrate cracks according to manufacturer's written instructions.

1. Prepare and prefill substrate cracks with membrane material.
2. Install membrane at substrate cracks in areas to receive terrazzo.
3. Reinforce membrane with fiberglass scrim.

G. Protect other work from water and dust generated by grinding operations. Control water and dust to comply with environmental protection regulations.

1. Erect and maintain temporary enclosures and other suitable methods to limit water damage and dust migration and to ensure adequate ambient temperatures and ventilation conditions during installation.

3.03 EPOXY-RESIN TERRAZZO INSTALLATION

A. Comply with NTMA's written recommendations for terrazzo and accessory installation.

B. Strip Materials:

1. Divider and Control-Joint Strips:

a. Locate divider strips in locations indicated.
b. Install control-joint strips back to back and directly above concrete-slab control joints in locations indicated.
c. Install control-joint strips with 1/4-inch gap between strips, and install sealant in gap.

d. Install strips in adhesive setting bed without voids below strips, or mechanically anchor strips as required to attach strips to substrate, as recommended by strip manufacturer.

2. Accessory Strips: Install as required to provide a complete installation.

C. Apply primer to terrazzo substrates according to manufacturer's written instructions.

D. Place, rough grind, grout, cure grout, fine grind, and finish terrazzo according to manufacturer's written instructions.

1. Installed Thickness: 3/8 inch nominal.
2. Terrazzo Finishing: Ensure that matrix components and fluids from grinding operations do not stain terrazzo by reacting with divider and control-joint strips.

a. Rough Grinding: Grind with 24-grit or finer stones or with comparable diamond abrasives. Follow initial grind with 60/80-grit stones or with comparable diamond abrasives.
b. Grouting: Before grouting, clean terrazzo with water, rinse, and allow to dry. Apply and cure epoxy grout.
c. Fine Grinding/Polishing: Delay fine grinding until heavy trade work is complete and construction traffic through area is restricted. Grind with 80-grit stones or with comparable diamond abrasives until grout is removed from surface.

3. Installation Tolerance: Limit variation in terrazzo surface from level to 1/4 inch in 10 feet; noncumulative.

E. Install and finish poured-in-place terrazzo base at the same time the adjacent terrazzo flooring is installed.

3.04 REPAIR

A. Cut out and replace terrazzo areas that evidence lack of bond with substrate. Cut out terrazzo areas in panels defined by strips and replace to match adjacent terrazzo, or repair panels according to NTMA's written recommendations, as approved by Architect.

3.05 CLEANING AND PROTECTION

A. Cleaning:

1. Remove grinding dust from installation and adjacent areas.
2. Wash surfaces with cleaner according to NTMA's written recommendations and manufacturer's written instructions; rinse surfaces with water and allow them to dry thoroughly.

B. Sealing:

1. Seal surfaces according to NTMA's written recommendations.
2. Apply sealer according to sealer manufacturer's written instructions.

C. Protection: Provide final protection and maintain conditions, in a manner acceptable to Installer, that ensure that terrazzo is without damage or deterioration at time of Substantial Completion.

END OF SECTION

SECTION 09 68 13
TILE CARPETING

PART 1 - GENERAL

1.01 SUMMARY

A. Section includes modular carpet tile.

1.02 PREINSTALLATION MEETINGS

A. Preinstallation Conference: Conduct conference at Project site.

1.03 ACTION SUBMITTALS

A. Product Data: For each type of product indicated.

B. Shop Drawings: Show the following:

1. Columns, doorways, enclosing walls or partitions, built-in cabinets, and locations where cutouts are required in carpet tiles.
2. Type of subfloor.
3. Type of installation.
4. Pattern of installation.
5. Pattern type, location, and direction.
6. Pile direction.

C. Samples: For each exposed product and for each color and texture specified.

1.04 INFORMATIONAL SUBMITTALS

A. Sample warranty.

1.05 CLOSEOUT SUBMITTALS

A. Maintenance data.

1.06 QUALITY ASSURANCE

A. Fire-Test-Response Ratings: Where indicated, provide carpet tile identical to those of assemblies tested for fire response according to NFPA 253 by a qualified testing agency.

1.07 DELIVERY, STORAGE, AND HANDLING

A. Comply with CRI 104.

1.08 FIELD CONDITIONS

A. Comply with CRI 104 for temperature, humidity, and ventilation limitations.

1.09 WARRANTY

A. Special Warranty for Carpet Tiles: Manufacturer agrees to repair or replace components of carpet tile installation that fail in materials or workmanship within specified warranty period.

1. Warranty does not include deterioration or failure of carpet tile due to unusual traffic, failure of substrate, vandalism, or abuse.
2. Failures include, but are not limited to, more than 10 percent edge raveling, snags, runs, dimensional stability, excess static discharge, loss of tuft bind strength, loss of face fiber, and delamination.
3. Warranty Period: 10 years from date of Substantial Completion.

PART 2 - PRODUCTS

2.01 CARPET TILE

A. Basis of Design: Design is based on products indicated on Drawings. Subject to compliance with requirements, provide named products or comparable products approved by Architect:

1. Interface, LLC.
2. Milliken & Company.
3. Mohawk Group (The); Mohawk Carpet, LLC.
4. Tandus; a Tarkett company.

B. Color: As indicated by manufacturer's designations or if not indicated as selected by Architect from full range of industry colors.

C. Pattern: Match Architect's samples.

2.02 INSTALLATION ACCESSORIES

A. Trowelable Leveling and Patching Compounds: Latex-modified, hydraulic-cement-based formulation provided or recommended by carpet tile manufacturer.

B. Adhesives: Water-resistant, mildew-resistant, nonstaining, pressure-sensitive type to suit products and subfloor conditions indicated, that complies with flammability requirements for installed carpet tile and is recommended by carpet tile manufacturer for releasable installation.

PART 3 - EXECUTION

3.01 INSTALLATION

A. Examine substrates, areas, and conditions, with Installer present, for compliance with requirements for maximum moisture content, alkalinity range, installation tolerances, and other conditions affecting carpet tile performance. Examine carpet tile for type, color, pattern, and potential defects.

B. Concrete Subfloors: Verify that concrete slabs comply with ASTM F 710.

C. Proceed with installation only after unsatisfactory conditions have been corrected.

D. Preparation: Comply with CRI's "Carpet Installation Standard 2011" and with carpet tile manufacturer's written installation instructions for preparing substrates indicated to receive carpet tile installation.

E. Installation: Comply with CRI's "Carpet Installation Standard 2011", Section 18, "Modular Carpet," and with carpet tile manufacturer's written installation instructions.

F. Installation Method: As recommended in writing by carpet tile manufacturer.

G. Maintain dye lot integrity. Do not mix dye lots in same area.

H. Cut and fit carpet tile to butt tightly to vertical surfaces, permanent fixtures, and built-in furniture including cabinets, pipes, outlets, edgings, thresholds, and nosings. Bind or seal cut edges as recommended by carpet tile manufacturer.

I. Extend carpet tile into toe spaces, door reveals, closets, open-bottomed obstructions, removable flanges, alcoves, and similar openings.

J. Maintain reference markers, holes, and openings that are in place or marked for future cutting by repeating on finish flooring as marked on subfloor. Use nonpermanent, nonstaining marking device.

K. Install pattern parallel to walls and borders.

L. Perform the following operations immediately after installing carpet tile:

1. Remove excess adhesive, seam sealer, and other surface blemishes using cleaner recommended by carpet tile manufacturer.
2. Remove yarns that protrude from carpet tile surface.
3. Vacuum carpet tile using commercial machine with face-beater element.

M. Protect installed carpet tile to comply with CRI 104, Section 16, "Protecting Indoor Installations."

END OF SECTION

SECTION 09 72 00
WALL COVERINGS

PART 1 - GENERAL

1.01 SUMMARY

A. Section includes:

1. Vinyl wall covering.
2. Textile/fabric wallcovering.

1.02 PREINSTALLATION MEETINGS

A. Preinstallation Conference: Conduct conference at Project site.

1.03 ACTION SUBMITTALS

A. Shop Drawings: Show location and extent of each wall-covering type. Indicate pattern placement, seams and termination points.

B. Samples for Initial Selection: For each type of wall covering.

C. Samples for Verification: For each type of wall covering and for each color, pattern, texture, and finish specified, full width by 36-inch- long in size.

1.04 CLOSEOUT SUBMITTALS

A. Maintenance Data: For wall coverings to include in maintenance manuals.

1.05 QUALITY ASSURANCE

A. Mockups: Build mockups to verify selections made under Sample submittals and to demonstrate aesthetic effects and to set quality standards for installation.

1. Build mockups for each type of wall covering on each substrate required. Comply with requirements in ASTM F 1141 for appearance shading characteristics.
2. Approval of mockups does not constitute approval of deviations from the Contract Documents contained in mockups unless Architect specifically approves such deviations in writing.
3. Subject to compliance with requirements, approved mockups may become part of the completed Work if undisturbed at time of Substantial Completion.

1.06 FIELD CONDITIONS

A. Environmental Limitations: Do not deliver or install wall coverings until spaces are enclosed and weathertight, wet work in spaces is complete and dry, work above ceilings is complete, and temporary HVAC system is operating and maintaining ambient temperature and humidity conditions at levels intended for occupants after Project completion during the remainder of the construction period.

B. Lighting: Do not install wall covering until lighting that matches conditions intended for occupants after Project completion is provided on the surfaces to receive wall covering.

C. Ventilation: Provide continuous ventilation during installation and for not less than the time recommended by wall-covering manufacturer for full drying or curing.

PART 2 - PRODUCTS

2.01 VINYL WALL COVERING

A. Provide wallcoverings as indicated on Drawings.

2.02 ACCESSORIES

A. Adhesive: Mildew-resistant, nonstaining, strippable adhesive, for use with specific wall covering and substrate application indicated and as recommended in writing by wall-covering manufacturer.

B. Primer/Sealer: Mildew resistant, complying with requirements in Division 09 Section “Interior Painting” and recommended in writing by primer/sealer and wall-covering manufacturers for intended substrate.

C. Seam Tape: As recommended in writing by wall-covering manufacturer.

PART 3 - EXECUTION

3.01 EXAMINATION

A. Examine substrates and conditions, with Installer present, for compliance with requirements for levelness, wall plumbness, maximum moisture content, and other conditions affecting performance of the Work.

B. Proceed with installation only after unsatisfactory conditions have been corrected.

3.02 PREPARATION

A. Comply with manufacturer's written instructions for surface preparation.

B. Clean substrates of substances that could impair bond of wall covering, including dirt, oil, grease, mold, mildew, and incompatible primers.

C. Prepare substrates to achieve a smooth, dry, clean, structurally sound surface free of flaking, unsound coatings, cracks, and defects.

1. Moisture Content: Maximum of 5 percent on new plaster, concrete, and concrete masonry units when tested with an electronic moisture meter.
2. Gypsum Board: Prime with primer as recommended in writing by primer/sealer manufacturer and wall-covering manufacturer.
3. Painted Surfaces: Treat areas susceptible to pigment bleeding.

D. Check painted surfaces for pigment bleeding. Sand gloss, semigloss, and eggshell finish with fine sandpaper.

E. Remove hardware and hardware accessories, electrical plates and covers, light fixture trims, and similar items.

F. Acclimatize wall-covering materials by removing them from packaging in the installation areas not less than 24 hours before installation.

3.03 WALL-COVERING INSTALLATION

A. Comply with wall-covering manufacturers' written installation instructions applicable to products and applications indicated.

B. Cut and install wall-covering strips per manufacturer’s written instructions.

C. Install wall covering without lifted or curling edges and without visible shrinkage.

D. Install seams vertical and plumb at least 6 inches from outside corners and 3 inches from inside corners unless a change of pattern or color exists at corner. Horizontal seams are not permitted.

E. Trim edges and seams for color uniformity, pattern match, and tight closure. Butt seams without overlaps or gaps between strips.

F. Fully bond wall covering to substrate. Remove air bubbles, wrinkles, blisters, and other defects.

3.04 CLEANING

A. Remove excess adhesive at seams, perimeter edges, and adjacent surfaces.

B. Use cleaning methods recommended in writing by wall-covering manufacturer.

C. Replace strips that cannot be cleaned.

D. Reinstall hardware and hardware accessories, electrical plates and covers, light fixture trims, and similar items.

END OF SECTION

SECTION 09 77 58
PLASTIC WALL PANELS

PART 1 - GENERAL

1.01 SUMMARY

A. Section includes embossed, PVC wall panels.

1.02 PREINSTALLATION MEETINGS

A. Preinstallation Conference: Conduct conference at Project site.

1.03 ACTION SUBMITTALS

A. Product Data: For each type of product.

1. Include panel, panel edge, adhesive, and mounting indicated.

B. Shop Drawings: For panel assembly and installation.

C. Samples for Initial Selection: For each type of panel.

1.04 CLOSEOUT SUBMITTALS

A. Maintenance Data: For each type of panel to include in maintenance manuals. Include manufacturers' written cleaning and stain-removal instructions.

1.05 DELIVERY, STORAGE, AND HANDLING

A. Comply with panel manufacturers' written instructions for minimum and maximum temperature and humidity requirements for shipment, storage, and handling.

B. Deliver materials and panels in unopened bundles and store in a temperature-controlled dry place with adequate air circulation.

1.06 FIELD CONDITIONS

A. Environmental Limitations: Do not install panels until spaces are enclosed and weathertight, wet-work in spaces is complete and dry, work at and above ceilings is complete, and ambient temperature and humidity conditions are maintained at the levels indicated for Project when occupied for its intended use.

1.07 WARRANTY

A. Special Warranty: Manufacturer agrees to repair or replace panels and components that fail in materials or workmanship within specified warranty period.

1. Failures include, but are not limited to, the following:

a. Warping of core.

2. Warranty Period: Two years from date of Substantial Completion.

PART 2 - PRODUCTS

2.01 MANUFACTURERS

A. Source Limitations: Obtain wall panels from single source from single manufacturer.

2.02 PERFORMANCE REQUIREMENTS

A. Fire-Test-Response Characteristics: Panels shall comply with “Surface-Burning Characteristics” or “Fire Growth Contribution” Subparagraph below, or both, as determined by testing identical products by UL or another testing and inspecting agency acceptable to authorities having jurisdiction:

1. Surface-Burning Characteristics: Comply with ASTM E 84 or UL 723; testing by a qualified testing agency. Identify products with appropriate markings of applicable testing agency.

a. Flame-Spread Index: 25 or less.
b. Smoke-Developed Index: 450 or less.

2. Fire Growth Contribution: Comply with acceptance criteria of local code and authorities having jurisdiction when tested according to NFPA 265 Method B Protocol or NFPA 286.

2.03 PLASTIC WALL PANELS

A. PVC Wall Panel: Manufacturer's standard solid panel construction consisting of PVC embossed with 3D design.

1. Basis of Design: Design is based on Ekena Millwork, “Wigan Endurawall Decorative 3D Wall Panel.” Subject to compliance with requirements, available manufacturers offering products that may be incorporated into the Work include, but are not limited to the following:
2. Panel Shape: Square, embossed.
3. Edge Profile: Square.
4. Mounting: Back mounted with manufacturer's recommended adhesive and mechanical fasteners.

5. Properties:

   a. Water resistant.
   b. Shatter resistant.

6. Color: Satin Hunt Club Green.

2.04 FABRICATION

A. Standard Construction: Use manufacturer's standard construction unless otherwise indicated; with material rigid edges to reinforce panel perimeter against warpage and damage.

PART 3 - EXECUTION

3.01 EXAMINATION

A. Examine fabricated panels, substrates, areas, and conditions for compliance with requirements, installation tolerances, and other conditions affecting panel performance.

B. Proceed with installation only after unsatisfactory conditions have been corrected.

3.02 INSTALLATION

A. Install panels in locations indicated. Unless otherwise indicated, install panels with vertical surfaces and edges plumb, top edges level and in alignment with other panels, faces flush, and scribed to fit adjoining work accurately at borders and at penetrations.

B. Comply with manufacturer's written instructions for installation of panels using type of mounting devices indicated. Mount panels securely to supporting substrate.

3.03 INSTALLATION TOLERANCES

A. Variation from Plumb and Level: Plus or minus 1/16 inch in 48 inches, noncumulative.

3.04 CLEANING

A. Clean panels on completion of installation to remove dust and other foreign materials according to manufacturer's written instructions.

END OF SECTION

SECTION 09 91 13
EXTERIOR PAINTING

PART 1 - GENERAL

1.01 SUMMARY

A. Section includes surface preparation and the application of paint systems on the following exterior substrates:

1. Steel and iron.
2. Galvanized metal.

B. Related Sections include Division 09 Section “High-Performance Coatings” for tile-like coatings.

1.02 DEFINITIONS

A. MPI Gloss Level 3: 10 to 25 units at 60 degrees and 10 to 35 units at 85 degrees, according to ASTM D 523.

B. MPI Gloss Level 4: 20 to 35 units at 60 degrees and not less than 35 units at 85 degrees, according to ASTM D 523.

C. MPI Gloss Level 5: 35 to 70 units at 60 degrees, according to ASTM D 523.

1.03 ACTION SUBMITTALS

A. Product Data: For each type of product. Include preparation requirements and application instructions.

1. Include printout of current “MPI Approved Products List” for each product category specified, with the proposed product highlighted.
2. Indicate VOC content.

B. Samples for Initial Selection: For each type of topcoat product.

C. Samples for Verification: For each type of paint system and each color and gloss of topcoat.

1. Submit Samples on rigid backing, 8 inches square.
2. Apply coats on Samples in steps to show each coat required for system.
3. Label each coat of each Sample.
4. Label each Sample for location and application area.

D. Product List: Cross-reference to paint system and locations of application areas. Use same designations indicated on Drawings and in schedules. Include color designations.

1.04 MAINTENANCE MATERIAL SUBMITTALS

A. Furnish extra materials that match products installed and that are packaged with protective covering for storage and identified with labels describing contents.

1. Paint: 5 percent, but not less than 1 gal. of each material and color applied.

1.05 QUALITY ASSURANCE

A. Mockups: Apply mockups of each paint system indicated and each color and finish selected to verify preliminary selections made under Sample submittals and to demonstrate aesthetic effects and set quality standards for materials and execution.

1. Architect will select one surface to represent surfaces and conditions for application of each paint system.

a. Vertical and Horizontal Surfaces: Provide samples of at least 100 sq. ft.
b. Other Items: Architect will designate items or areas required.

2. Final approval of color selections will be based on mockups.

a. If preliminary color selections are not approved, apply additional mockups of additional colors selected by Architect at no added cost to Owner.

3. Approval of mockups does not constitute approval of deviations from the Contract Documents contained in mockups unless Architect specifically approves such deviations in writing.
4. Subject to compliance with requirements, approved mockups may become part of the completed Work if undisturbed at time of Substantial Completion.

1.06 DELIVERY, STORAGE, AND HANDLING

A. Store materials not in use in tightly covered containers in well-ventilated areas with ambient temperatures continuously maintained at not less than 45 deg F.

1. Maintain containers in clean condition, free of foreign materials and residue.
2. Remove rags and waste from storage areas daily.

1.07 FIELD CONDITIONS

A. Apply paints only when temperature of surfaces to be painted and ambient air temperatures are between 50 and 95 deg F.

B. Do not apply paints in snow, rain, fog, or mist; when relative humidity exceeds 85 percent; at temperatures less than 5 deg F above the dew point; or to damp or wet surfaces.

PART 2 - PRODUCTS

2.01 MANUFACTURERS

A. Manufacturers: Subject to compliance with requirements, available manufacturers offering products that may be incorporated into the Work include, but are not limited to the following:

1. Behr Process Corporation.
2. Benjamin Moore & Co.
3. PPG Paints.
4. Pratt & Lambert.
5. Sherwin-Williams Company (The).

2.02 PAINT, GENERAL

A. MPI Standards: Products shall comply with MPI standards indicated and shall be listed in its "MPI Approved Products Lists."

B. Material Compatibility:

1. Materials for use within each paint system shall be compatible with one another and substrates indicated, under conditions of service and application as demonstrated by manufacturer, based on testing and field experience.
2. For each coat in a paint system, products shall be recommended in writing by topcoat manufacturers for use in paint system and on substrate indicated.

C. Colors: As indicated in a color schedule or if not indicated, as selected by Architect from manufacturer's full range.

2.03 SOURCE QUALITY CONTROL

A. Testing of Paint Materials: Owner reserves the right to invoke the following procedure:

1. Owner will engage the services of a qualified testing agency to sample paint materials. Contractor will be notified in advance and may be present when samples are taken. If paint materials have already been delivered to Project site, samples may be taken at Project site. Samples will be identified, sealed, and certified by testing agency.
2. Testing agency will perform tests for compliance with product requirements.
3. Owner may direct Contractor to stop applying paints if test results show materials being used do not comply with product requirements. Contractor shall remove noncomplying paint materials from Project site, pay for testing, and repaint surfaces painted with rejected materials. Contractor will be required to remove rejected materials from previously painted surfaces if, on repainting with complying materials, the two paints are incompatible.

PART 3 - EXECUTION

3.01 EXAMINATION

A. Examine substrates and conditions, with Applicator present, for compliance with requirements for maximum moisture content and other conditions affecting performance of the Work.

B. Maximum Moisture Content of Substrates: When measured with an electronic moisture meter as follows:

1. Concrete Unit Masonry: 12 percent.

C. Verify suitability of substrates, including surface conditions and compatibility, with existing finishes and primers.

D. Proceed with coating application only after unsatisfactory conditions have been corrected.

1. Application of coating indicates acceptance of surfaces and conditions.

3.02 PREPARATION

A. Comply with manufacturer's written instructions and recommendations in “MPI Architectural Painting Specification Manual” and “MPI Maintenance Repainting Manual” applicable to substrates and paint systems indicated.

B. Remove hardware, covers, plates, and similar items already in place that are removable and are not to be painted. If removal is impractical or impossible because of size or weight of item, provide surface-applied protection before surface preparation and painting.

1. After completing painting operations, use workers skilled in the trades involved to reinstall items that were removed. Remove surface-applied protection.

C. Clean substrates of substances that could impair bond of paints, including dust, dirt, oil, grease, and incompatible paints and encapsulants.

1. Remove incompatible primers and reprime substrate with compatible primers or apply tie coat as required to produce paint systems indicated.

D. Concrete Substrates: Remove release agents, curing compounds, efflorescence, and chalk. Do not paint surfaces if moisture content or alkalinity of surfaces to be painted exceeds that permitted in manufacturer's written instructions.

E. Masonry Substrates: Remove efflorescence and chalk. Do not paint surfaces if moisture content or alkalinity of surfaces or mortar joints exceeds that permitted in manufacturer's written instructions.

F. Steel Substrates: Remove rust, loose mill scale, and shop primer if any. Clean using methods recommended in writing by paint manufacturer.

G. Shop-Primed Steel Substrates: Clean field welds, bolted connections, and areas where shop paint is abraded. Paint exposed areas with the same material as used for shop priming to comply with SSPC-PA 1 for touching up shop-primed surfaces.

H. Galvanized-Metal Substrates: Remove grease and oil residue from galvanized sheet metal by mechanical methods to produce clean, lightly etched surfaces that promote adhesion of subsequently applied paints.

3.03 APPLICATION

A. Apply paints according to manufacturer's written instructions and recommendations in "MPI Architectural Painting Specification Manual."

1. Use applicators and techniques suited for paint and substrate indicated.
2. Paint surfaces behind movable items same as similar exposed surfaces. Before final installation, paint surfaces behind permanently fixed items with prime coat only.
3. Paint both sides and edges of exterior doors and entire exposed surface of exterior door frames.
4. Do not paint over labels of independent testing agencies or equipment name, identification, performance rating, or nomenclature plates.
5. Primers specified in painting schedules may be omitted on items that are factory primed or factory finished if acceptable to topcoat manufacturers.

B. If undercoats or other conditions show through topcoat, apply additional coats until cured film has a uniform paint finish, color, and appearance.

C. Apply paints to produce surface films without cloudiness, spotting, holidays, laps, brush marks, roller tracking, runs, sags, ropiness, or other surface imperfections. Cut in sharp lines and color breaks.

D. Painting Fire Suppression, Plumbing, HVAC, Electrical, Communication, and Electronic Safety and Security Work:

1. Paint the following work where exposed to view:

   a. Equipment, including panelboards and switch gear.
   b. Uninsulated metal piping.
   c. Metal conduit.

3.04 FIELD QUALITY CONTROL

A. Dry Film Thickness Testing: Owner may engage the services of a qualified testing and inspecting agency to inspect and test paint for dry film thickness.

1. Contractor shall touch up and restore painted surfaces damaged by testing.
2. If test results show that dry film thickness of applied paint does not comply with paint manufacturer's written recommendations, Contractor shall pay for testing and apply additional coats as needed to provide dry film thickness that complies with paint manufacturer's written recommendations.

3.05 CLEANING AND PROTECTION

A. At end of each workday, remove rubbish, empty cans, rags, and other discarded materials from Project site.

B. After completing paint application, clean spattered surfaces. Remove spattered paints by washing, scraping, or other methods. Do not scratch or damage adjacent finished surfaces.

C. Protect work of other trades against damage from paint application. Correct damage to work of other trades by cleaning, repairing, replacing, and refinishing, as approved by Architect, and leave in an undamaged condition.

D. At completion of construction activities of other trades, touch up and restore damaged or defaced painted surfaces.

3.06 EXTERIOR PAINTING SCHEDULE

A. Steel and Iron Substrates:

1. Alkyd System MPI EXT 5.1D:

a. Prime Coat: Primer, alkyd, anticorrosive, for metal, MPI #79.
b. Intermediate Coat: Exterior, alkyd enamel, matching topcoat.
c. Topcoat: Alkyd, exterior, semi-gloss (MPI Gloss Level 5), MPI #94.

B. Galvanized-Metal Substrates:

1. Typical Galvanized Steel Surfaces: Latex system complying with MPI EXT 5.3H:

a. Prime Coat: Primer, galvanized, water based, MPI #134.
b. Intermediate Coat: Latex, exterior, matching topcoat.
c. Topcoat: Latex, exterior, semi-gloss (MPI Gloss Level 5), MPI #11.

2. Galvanized Steel Substrates at Doors, Frames, and Handrails: Water-based light industrial coating system complying with MPI EXT 5.3K:

a. Prime Coat: Primer, epoxy, anti-corrosive, MPI #101.
b. Intermediate Coat: Light industrial coating, exterior, water based, matching topcoat.
c. Topcoat: Light industrial coating, exterior, water based, semi-gloss (MPI Gloss Level 5), MPI #163.

END OF SECTION

SECTION 09 91 23
INTERIOR PAINTING

PART 1 - GENERAL

1.01 SUMMARY

A. Section includes surface preparation and the application of paint systems on the following interior substrates:

1. Steel and iron.
2. Galvanized metal.
3. Wood.
4. Gypsum board.

B. Related Sections include:

1. Division 09 Section “High-Performance Coatings” for tile-like coatings.

1.02 DEFINITIONS

A. MPI Gloss Level 1: Not more than five units at 60 degrees and 10 units at 85 degrees, according to ASTM D 523.

B. MPI Gloss Level 3: 10 to 25 units at 60 degrees and 10 to 35 units at 85 degrees, according to ASTM D 523.

C. MPI Gloss Level 4: 20 to 35 units at 60 degrees and not less than 35 units at 85 degrees, according to ASTM D 523.

D. MPI Gloss Level 5: 35 to 70 units at 60 degrees, according to ASTM D 523.

1.03 ACTION SUBMITTALS

A. Product Data: For each type of product. Include preparation requirements and application instructions.

1. Include Printout of current “MPI Approved Products List” for each product category specified, with the proposed product highlighted.
2. Indicate VOC content.

B. Samples for Initial Selection: For each type of topcoat product.

C. Samples for Verification: For each type of paint system and in each color and gloss of topcoat.

1. Submit Samples on rigid backing, 8 inches square.
2. Apply coats on Samples in steps to show each coat required for system.
3. Label each coat of each Sample.
4. Label each Sample for location and application area.

D. Product List: Cross-reference to paint system and locations of application areas. Use same designations indicated on Drawings and in schedules. Include color designations.

1.04 MAINTENANCE MATERIAL SUBMITTALS

A. Furnish extra materials that match products installed and that are packaged with protective covering for storage and identified with labels describing contents.

1. Paint: 5 percent, but not less than 1 gal. of each material and color applied.

1.05 QUALITY ASSURANCE

A. Mockups: Apply mockups of each paint system indicated and each color and finish selected to verify preliminary selections made under Sample submittals and to demonstrate aesthetic effects and set quality standards for materials and execution.

1. Architect will select one surface to represent surfaces and conditions for application of each paint system.

a. Vertical and Horizontal Surfaces: Provide samples of at least 100 sq. ft.
b. Other Items: Architect will designate items or areas required.

2. Final approval of color selections will be based on mockups.

a. If preliminary color selections are not approved, apply additional mockups of additional colors selected by Architect at no added cost to Owner.

3. Approval of mockups does not constitute approval of deviations from the Contract Documents contained in mockups unless Architect specifically approves such deviations in writing.
4. Subject to compliance with requirements, approved mockups may become part of the completed Work if undisturbed at time of Substantial Completion.

1.06 DELIVERY, STORAGE, AND HANDLING

A. Store materials not in use in tightly covered containers in well-ventilated areas with ambient temperatures continuously maintained at not less than 45 deg F.

1. Maintain containers in clean condition, free of foreign materials and residue.
2. Remove rags and waste from storage areas daily.

1.07 FIELD CONDITIONS

A. Apply paints only when temperature of surfaces to be painted and ambient air temperatures are between 50 and 95 deg F.

B. Do not apply paints when relative humidity exceeds 85 percent; at temperatures less than 5 deg F above the dew point; or to damp or wet surfaces.

PART 2 - PRODUCTS

2.01 MANUFACTURERS

A. Manufacturers: Subject to compliance with requirements, available manufacturers offering products that may be incorporated into the Work include, but are not limited to the following:

1. Behr Process Corporation.
2. Benjamin Moore & Co.
3. PPG Paints.
4. Pratt & Lambert.
5. Sherwin-Williams Company (The).

2.02 PAINT, GENERAL

A. MPI Standards: Products shall comply with MPI standards indicated and shall be listed in its "MPI Approved Products Lists."

B. Material Compatibility:

1. Materials for use within each paint system shall be compatible with one another and substrates indicated, under conditions of service and application as demonstrated by manufacturer, based on testing and field experience.
2. For each coat in a paint system, products shall be recommended in writing by topcoat manufacturers for use in paint system and on substrate indicated.

C. Colors: As indicated in a color schedule or if not indicated as selected by Architect from manufacturer's full range.

2.03 SOURCE QUALITY CONTROL

A. Testing of Paint Materials: Owner reserves the right to invoke the following procedure:

1. Owner will engage the services of a qualified testing agency to sample paint materials. Contractor will be notified in advance and may be present when samples are taken. If paint materials have already been delivered to Project site, samples may be taken at Project site. Samples will be identified, sealed, and certified by testing agency.
2. Testing agency will perform tests for compliance with product requirements.
3. Owner may direct Contractor to stop applying paints if test results show materials being used do not comply with product requirements. Contractor shall remove noncomplying paint materials from Project site, pay for testing, and repaint surfaces painted with rejected materials. Contractor will be required to remove rejected materials from previously painted surfaces if, on repainting with complying materials, the two paints are incompatible.

PART 3 - EXECUTION

3.01 EXAMINATION

A. Examine substrates and conditions, with Applicator present, for compliance with requirements for maximum moisture content and other conditions affecting performance of the Work.

B. Maximum Moisture Content of Substrates: When measured with an electronic moisture meter as follows:

1. Masonry (Clay and CMUs): 12 percent.
2. Wood: 15 percent.
3. Gypsum Board: 12 percent.
4. Glass-Fiber-Reinforced Gypsum Fabrications: 12 percent.

C. Gypsum Board and Glass-Fiber-Reinforced Gypsum Fabrication Substrates: Verify that finishing compound is sanded smooth.

D. Proceed with coating application only after unsatisfactory conditions have been corrected.

1. Application of coating indicates acceptance of surfaces and conditions.

3.02 PREPARATION

A. Comply with manufacturer's written instructions and recommendations in “MPI Architectural Painting Specification Manual” and “MPI Maintenance Repainting Manual” applicable to substrates and paint systems indicated.

B. Remove hardware, covers, plates, and similar items already in place that are removable and are not to be painted. If removal is impractical or impossible because of size or weight of item, provide surface-applied protection before surface preparation and painting.

1. After completing painting operations, use workers skilled in the trades involved to reinstall items that were removed. Remove surface-applied protection if any.

C. Clean substrates of substances that could impair bond of paints, including dust, dirt, oil, grease, and incompatible paints and encapsulants.

1. Remove incompatible primers and reprime substrate with compatible primers or apply tie coat as required to produce paint systems indicated.

D. Concrete Substrates: Remove release agents, curing compounds, efflorescence, and chalk. Do not paint surfaces if moisture content or alkalinity of surfaces to be painted exceeds that permitted in manufacturer's written instructions.

E. Masonry Substrates: Remove efflorescence and chalk. Do not paint surfaces if moisture content or alkalinity of surfaces or mortar joints exceeds that permitted in manufacturer's written instructions.

F. Steel Substrates: Remove rust, loose mill scale, and shop primer, if any. Clean using methods recommended in writing by paint manufacturer.

G. Shop-Primed Steel Substrates: Clean field welds, bolted connections, and areas where shop paint is abraded. Paint exposed areas with the same material as used for shop priming to comply with SSPC-PA 1 for touching up shop-primed surfaces.

H. Galvanized-Metal Substrates: Remove grease and oil residue from galvanized sheet metal by mechanical methods to produce clean, lightly etched surfaces that promote adhesion of subsequently applied paints.

I. Wood Substrates:

1. Scrape and clean knots, and apply coat of knot sealer before applying primer.
2. Sand surfaces that will be exposed to view, and dust off.
3. Prime edges, ends, faces, undersides, and backsides of wood.
4. After priming, fill holes and imperfections in the finish surfaces with putty or plastic wood filler. Sand smooth when dried.

3.03 APPLICATION

A. Apply paints according to manufacturer's written instructions and to recommendations in “MPI Manual.”

1. Use applicators and techniques suited for paint and substrate indicated.
2. Paint surfaces behind movable equipment and furniture same as similar exposed surfaces. Before final installation, paint surfaces behind permanently fixed equipment or furniture with prime coat only.
3. Paint front and backsides of access panels, removable or hinged covers, and similar hinged items to match exposed surfaces.
4. Do not paint over labels of independent testing agencies or equipment name, identification, performance rating, or nomenclature plates.
5. Primers specified in painting schedules may be omitted on items that are factory primed or factory finished if acceptable to topcoat manufacturers.

B. If undercoats or other conditions show through topcoat, apply additional coats until cured film has a uniform paint finish, color, and appearance.

C. Apply paints to produce surface films without cloudiness, spotting, holidays, laps, brush marks, roller tracking, runs, sags, ropiness, or other surface imperfections. Cut in sharp lines and color breaks.

D. Painting Fire Suppression, Plumbing, HVAC, Electrical, Communication, and Electronic Safety and Security Work:

1. Paint the following work where exposed in equipment rooms:

   a. Uninsulated metal piping.
   b. Uninsulated plastic piping.

2. Paint the following work where exposed in occupied spaces:

   a. Equipment, including panelboards.
   b. Uninsulated metal piping.
   c. Uninsulated plastic piping.
   d. Pipe hangers and supports.
   e. Metal conduit.
   f. Plastic conduit.
   g. Other items as directed by Architect.

3. Paint portions of internal surfaces of metal ducts, without liner, behind air inlets and outlets that are visible from occupied spaces.

3.04 FIELD QUALITY CONTROL

A. Dry Film Thickness Testing: Owner may engage the services of a qualified testing and inspecting agency to inspect and test paint for dry film thickness.

1. Contractor shall touch up and restore painted surfaces damaged by testing.
2. If test results show that dry film thickness of applied paint does not comply with paint manufacturer's written recommendations, Contractor shall pay for testing and apply additional coats as needed to provide dry film thickness that complies with paint manufacturer's written recommendations.

3.05 CLEANING AND PROTECTION

A. At end of each workday, remove rubbish, empty cans, rags, and other discarded materials from Project site.

B. After completing paint application, clean spattered surfaces. Remove spattered paints by washing, scraping, or other methods. Do not scratch or damage adjacent finished surfaces.

C. Protect work of other trades against damage from paint application. Correct damage to work of other trades by cleaning, repairing, replacing, and refinishing, as approved by Architect, and leave in an undamaged condition.

D. At completion of construction activities of other trades, touch up and restore damaged or defaced painted surfaces.

3.06 INTERIOR PAINTING SCHEDULE

A. Steel Substrates:

1. Typical Steel Substrates Unless Otherwise Indicated: Institutional low-odor/VOC latex system complying with MPI INT 5.1S:

   a. Prime Coat: Primer, rust inhibitive, water based MPI #107.
   b. Intermediate Coat: Latex, interior, institutional low odor/VOC, matching topcoat.
   c. Topcoat: Latex, interior, institutional low odor/VOC, semi-gloss (MPI Gloss Level 5), MPI #147.

2. Steel Substrates of Doors, Frames, and Handrails: High-performance architectural latex system complying with MPI INT 5.1RR:

   a. Prime Coat: Shop primer specified in Section where substrate is specified.
   b. Topcoat: Latex, interior, high performance architectural, semi-gloss (MPI Gloss Level 5), MPI #141.

3. Typical Exposed Steel Structural Framing Exposed to View: Water-Based dry-fall over shop-applied quick-drying shop primer system complying with MPI INT 5.1CCC:

   a. Prime Coat: Primer, quick dry, for shop application, MPI #275.
   b. Topcoat: Dry fall, water based, for galvanized steel, flat (MPI Gloss Level 1), MPI #133.

B. Galvanized-Metal Substrates:

1. Typical for Galvanized Substrates Unless Otherwise Indicated: Institutional Low-Odor/VOC latex system complying with MPI INT 5.3N:

    a. Prime Coat: Primer, galvanized, water based, MPI #134.
    b. Intermediate Coat: Latex, interior, institutional low odor/VOC, matching topcoat.
    c. Topcoat: Latex, interior, institutional low odor/VOC, semi-gloss (MPI Gloss Level 5), MPI #147.

2. Galvanized Steel Substrates of Doors, Frames, and Handrails: High-performance architectural latex system complying with MPI INT 5.3M:

    a. Prime Coat: Primer, galvanized, water based, MPI #134.
    b. Intermediate Coat: Latex, interior, high performance architectural, matching topcoat.
    c. Topcoat: Latex, interior, high performance architectural, semi-gloss (MPI Gloss Level 5), MPI #141.

3. Galvanized Steel Decking Exposed to View: Water-based dry-fall system complying with MPI INT 5.3H:

    a. Prime Coat: Dry fall, water based, for galvanized steel, matching topcoat.
    b. Topcoat: Dry fall, water based, for galvanized steel, flat (MPI Gloss Level 1), MPI #133.

C. Wood Substrates: Wood trim.

1. High-Performance Architectural Latex System MPI INT 6.3A:

    a. Prime Coat: Primer, latex, for interior wood, MPI #39.
    b. Intermediate Coat: Latex, interior, high performance architectural, matching topcoat.
    c. Topcoat: Latex, interior, high performance architectural, semi-gloss (MPI Gloss Level 5), MPI #141.

D. Gypsum Board Substrates:

1. Typical Gypsum Board Wall Substrates Unless Otherwise Indicated: Institutional Low-Odor/VOC Latex System complying with MPI INT 9.2M:

    a. Prime Coat: Primer sealer, interior, institutional low odor/VOC, MPI #149.
    b. Intermediate Coat: Latex, interior, institutional low odor/VOC, matching topcoat.
    c. Topcoat: Latex, interior, institutional low odor/VOC (MPI Gloss Level 2), MPI #144.

2. Typical Gypsum Board Ceiling and Soffit Substrates Unless Otherwise Indicated: Institutional Low-Odor/VOC Latex System complying with MPI INT 9.2M:

    a. Prime Coat: Primer sealer, interior, institutional low odor/VOC, MPI #149.
    b. Intermediate Coat: Latex, interior, institutional low odor/VOC, matching topcoat.
    c. Topcoat: Latex, interior, institutional low odor/VOC, flat (MPI Gloss Level 1), MPI #143.

3. Gypsum Board Wall Surfaces at Corridors, Lobbies, Hallways and Similar High Traffic Areas: High-Performance Architectural Latex System MPI INT 9.2B:

    a. Prime Coat: Primer sealer, latex, interior, MPI #50.
    b. Intermediate Coat: Latex, interior, high performance architectural, matching topcoat.
    c. Topcoat: Latex, interior, high performance architectural (MPI Gloss Level 2), MPI #138.

4. Gypsum Board Wall Surfaces at Janitor Closets, Restrooms, and Similar Service Areas: High-Performance Architectural Latex System MPI INT 9.2B:

    a. Prime Coat: Primer sealer, latex, interior, MPI #50.
    b. Intermediate Coat: Latex, interior, high performance architectural, matching topcoat.
    c. Topcoat: Latex, interior, high performance architectural (MPI Gloss Level 2), MPI #138.

END OF SECTION

SECTION 09 96 00
HIGH-PERFORMANCE COATINGS

PART 1 - GENERAL

1.01 SUMMARY

A. Section includes surface preparation and the application of high-performance coating systems on the following exterior and interior substrates:

1. Exterior Substrates:

a. Steel.
b. Galvanized metal.

2. Interior Substrates:

a. Steel.
b. Gypsum board.

B. Related Sections include:

1. Division 09 Section “Exterior Painting” for general field painting.
2. Division 09 Section “Interior Painting” for general field painting.

1.02 DEFINITIONS

A. MPI Gloss Level 6: 70 to 85 units at 60 degrees, according to ASTM D 523.

1.03 ACTION SUBMITTALS

A. Product Data: For each type of product. Include preparation requirements and application instructions.

1. Include printout of current “MPI Approved Products List” for each product category specified, with the proposed product highlighted.
2. Indicate VOC content.

B. Samples for Initial Selection: For each type of topcoat product indicated.

C. Samples for Verification: For each type of coating system and each color and gloss of topcoat indicated.

1. Submit Samples on rigid backing, 8 inches square.
2. Apply coats on Samples in steps to show each coat required for system.
3. Label each coat of each Sample.

4. Label each Sample for location and application area.

D. Product List: Cross-reference to coating system and locations of application areas. Use same designations indicated on Drawings and in schedules. Include color designations.

1.04 MAINTENANCE MATERIAL SUBMITTALS

A. Furnish extra materials that match products installed and that are packaged with protective covering for storage and identified with labels describing contents.

1. Coatings: 5 percent, but not less than 1 gal. of each material and color applied.

1.05 QUALITY ASSURANCE

A. Mockups: Apply mockups of each coating system indicated to verify preliminary selections made under Sample submittals and to demonstrate aesthetic effects and set quality standards for materials and execution.

1. Architect will designate one surface to represent surfaces and conditions for application of coating system.
2. Final approval of color selections will be based on mockups.

a. If preliminary color selections are not approved, apply additional mockups of additional colors selected by Architect at no added cost to Owner.

3. Approval of mockups does not constitute approval of deviations from the Contract Documents contained in mockups unless Architect specifically approves such deviations in writing.
4. Subject to compliance with requirements, approved mockups may become part of the completed Work if undisturbed at time of Substantial Completion.

1.06 DELIVERY, STORAGE, AND HANDLING

A. Store materials not in use in tightly covered containers in well-ventilated areas with ambient temperatures continuously maintained at not less than 45 deg F.

1. Maintain containers in clean condition, free of foreign materials and residue.
2. Remove rags and waste from storage areas daily.

1.07 FIELD CONDITIONS

A. Apply coatings only when temperature of surfaces to be coated and ambient air temperatures are between 50 and 95 deg F.

B. Do not apply coatings when relative humidity exceeds 85 percent; at temperatures less than 5 deg F above the dew point; or to damp or wet surfaces.

C. Do not apply exterior coatings in snow, rain, fog, or mist.

PART 2 - PRODUCTS

2.01 MANUFACTURERS

A. Manufacturers: Subject to compliance with requirements, available manufacturers offering products that may be incorporated into the Work include, but are not limited to the following:

1. Behr Process Corporation.
2. Benjamin Moore & Co.
3. Devoe Paint Company; Akzo Nobel.
4. PPG Paints.
5. Sherwin-Williams Company (The).
6. Tnemec Inc.

2.02 HIGH-PERFORMANCE COATINGS, GENERAL

A. MPI Standards: Products shall comply with MPI standards indicated and shall be listed in its "MPI Approved Products Lists."

B. Material Compatibility:

1. Materials for use within each paint system shall be compatible with one another and substrates indicated, under conditions of service and application as demonstrated by manufacturer, based on testing and field experience.
2. For each coat in a paint system, products shall be recommended in writing by topcoat manufacturers for use in paint system and on substrate indicated.
3. Products shall be of same manufacturer for each coat in a coating system.

C. Colors: As indicated in color schedule or if not indicated as selected by Architect from manufacturer's full range.

2.03 SOURCE QUALITY CONTROL

A. Testing of Coating Materials: Owner reserves the right to invoke the following procedure:

1. Owner will engage the services of a qualified testing agency to sample coating materials. Contractor will be notified in advance and may be present when samples are taken. If coating materials have already been delivered to Project site, samples may be taken at Project site. Samples will be identified, sealed, and certified by testing agency.
2. Testing agency will perform tests for compliance with product requirements.
3. Owner may direct Contractor to stop applying coatings if test results show materials being used do not comply with product requirements. Contractor shall remove noncomplying coating materials from Project site, pay for testing, and recoat surfaces coated with rejected materials. Contractor will be required to remove rejected materials from previously coated surfaces if, on recoating with complying materials, the two coatings are incompatible.

PART 3 - EXECUTION

3.01 EXAMINATION

A. Examine substrates and conditions, with Applicator present, for compliance with requirements for maximum moisture content and other conditions affecting performance of the Work.

B. Verify suitability of substrates, including surface conditions and compatibility, with existing finishes and primers.

C. Proceed with coating application only after unsatisfactory conditions have been corrected.

1. Application of coating indicates acceptance of surfaces and conditions.

3.02 PREPARATION

A. Comply with manufacturer's written instructions and recommendations in “MPI Architectural Painting Specification Manual” applicable to substrates and coating systems indicated.

B. Remove hardware, covers, plates, and similar items already in place that are removable and are not to be painted. If removal is impractical or impossible because of size or weight of item, provide surface-applied protection before surface preparation and painting.

1. After completing painting operations, use workers skilled in the trades involved to reinstall items that were removed. Remove surface-applied protection if any.

C. Clean substrates of substances that could impair bond of coatings, including dust, dirt, oil, grease, and incompatible paints and encapsulants.

1. Remove incompatible primers and reprime substrate with compatible primers or apply tie coat as required to produce coating systems indicated.

D. Concrete Substrates: Remove release agents, curing compounds, efflorescence, and chalk. Do not coat surfaces if moisture content or alkalinity of surfaces to be coated exceeds that permitted in manufacturer's written instructions.

E. Masonry Substrates: Remove efflorescence and chalk. Do not coat surfaces if moisture content, alkalinity of surfaces, or alkalinity of mortar joints exceeds that permitted in manufacturer's written instructions.

3.03 APPLICATION

A. Apply high-performance coatings according to manufacturer's written instructions and recommendations in “MPI Architectural Painting Specification Manual.”

1. Use applicators and techniques suited for coating and substrate indicated.

2. Coat surfaces behind movable equipment and furniture same as similar exposed surfaces. Before final installation, coat surfaces behind permanently fixed equipment or furniture with prime coat only.
3. Coat backsides of access panels, removable or hinged covers, and similar hinged items to match exposed surfaces.
4. Do not apply coatings over labels of independent testing agencies or equipment name, identification, performance rating, or nomenclature plates.

B. If undercoats or other conditions show through final coat, apply additional coats until cured film has a uniform coating finish, color, and appearance.

C. Apply coatings to produce surface films without cloudiness, spotting, holidays, laps, brush marks, runs, sags, ropiness, or other surface imperfections. Produce sharp glass lines and color breaks.

3.04 FIELD QUALITY CONTROL

A. Dry Film Thickness Testing: Owner may engage the services of a qualified testing and inspecting agency to inspect and test coatings for dry film thickness.

1. Contractor shall touch up and restore coated surfaces damaged by testing.
2. If test results show that dry film thickness of applied coating does not comply with coating manufacturer's written recommendations, Contractor shall pay for testing and apply additional coats as needed to provide dry film thickness that complies with coating manufacturer's written recommendations.

3.05 CLEANING AND PROTECTION

A. At end of each workday, remove rubbish, empty cans, rags, and other discarded materials from Project site.

B. After completing coating application, clean spattered surfaces. Remove spattered coatings by washing, scraping, or other methods. Do not scratch or damage adjacent finished surfaces.

C. Protect work of other trades against damage from coating operation. Correct damage to work of other trades by cleaning, repairing, replacing, and recoating, as approved by Architect, and leave in an undamaged condition.

D. At completion of construction activities of other trades, touch up and restore damaged or defaced coated surfaces.

3.06 EXTERIOR HIGH-PERFORMANCE COATING SCHEDULE

A. Steel Substrates

1. Pigmented Polyurethane over Epoxy Zinc-Rich Primer and High-Build Epoxy System MPI EXT 5.1G:

a. Prime Coat: Primer, zinc rich, epoxy, MPI #20.
b. Intermediate Coat: Epoxy, high build, low gloss, MPI #108.
c. First and Second Topcoat: Polyurethane, two component, pigmented, gloss (MPI Gloss Level 6), MPI #72.

B. Galvanized-Metal Substrates:

1. Pigmented Polyurethane over Epoxy Primer System MPI EXT 5.3L:

a. Prime Coat: Primer, epoxy, anti-corrosive, for metal, MPI #101.
b. Intermediate Coat: Polyurethane, two component, pigmented, gloss matching topcoat.
c. Topcoat: Polyurethane, two component, pigmented, gloss (MPI Gloss Level 6), MPI #72.

3.07 INTERIOR HIGH-PERFORMANCE COATING SCHEDULE

A. Steel Substrates:

1. Epoxy-Modified Latex System MPI INT 5.1K:

a. Prime Coat: Primer, rust inhibitive, water based, MPI #107.
b. Intermediate Coat: Epoxy-modified latex, interior, matching topcoat.
c. Topcoat: Epoxy-modified latex, semi-gloss (MPI Gloss Level 5), MPI #215.
d. Topcoat: Epoxy-modified latex, gloss (MPI Gloss Level 6), MPI #115.

B. Gypsum Board Substrates:

1. Epoxy-Modified Latex System MPI INT 9.2F:

a. Prime Coat: Primer sealer, latex, interior, MPI #50.
b. Intermediate Coat: Epoxy-modified latex, matching topcoat.
c. Topcoat: Epoxy-modified latex, semi-gloss (MPI Gloss Level 5), MPI #215.
d. Topcoat: Epoxy-modified latex, gloss (MPI Gloss Level 6), MPI #115.

END OF SECTION

SECTION 09 97 24
PENETRATING LIQUID FLOOR TREATMENT

PART 1 - GENERAL

1.01 SUMMARY

A. Section includes penetrating liquid floor treatment applied to cured concrete.

1.02 SUBMITTALS

A. Product Data: For each type of product indicated.

1.03 QUALITY ASSURANCE

A. Source Limitations: Obtain penetrating liquid floor treatment materials through one source from a single manufacturer.

PART 2 - PRODUCTS

2.01 FLOOR AND SLAB TREATMENTS

A. Penetrating Liquid Floor Treatment: Clear, chemically reactive, waterborne solution of inorganic silicate or siliconate materials and proprietary components; odorless; colorless; that penetrates, hardens, and densifies concrete surfaces.

1. Available Products: Subject to compliance with requirements, products that may be incorporated into the Work include, but are not limited to, the following:

a. Burke by Edoco; Titan Hard.
b. Curecrete Distribution Inc.; Ashford Formula.
c. Dayton Superior Corporation; Day-Chem Sure Hard.
d. Euclid Chemical Company (The); Euco Diamond Hard.
e. Meadows, W. R., Inc.; Liqui-Hard.
f. Symons Corporation, a Dayton Superior Company; Buff Hard.

PART 3 - EXECUTION

3.01 PREPARATION

A. Clean substrates of substances that could impair application of penetrating liquid floor treatment, including dirt, oil, grease, and paints.

3.02 LIQUID FLOOR TREATMENTS

A. Penetrating Liquid Floor Treatment: Prepare, apply, and finish penetrating liquid floor treatment according to manufacturer's written instructions.

1. Apply to concrete that is fully cured; do not apply to concrete that is less than 28 days' old.
2. Apply liquid until surface is saturated, scrubbing into surface until a gel forms; rewet; and repeat brooming or scrubbing. Rinse with water; remove excess material until surface is dry. Apply a second coat in a similar manner if surface is rough or porous.

3.03 CLEANING AND PROTECTION

A. Protect work of other trades against damage from floor treatment application. Correct damage to work of other trades by cleaning, repairing, replacing, and refinishing, as approved by Architect, and leave in an undamaged condition.

END OF SECTION

SECTION 10 11 00
VISUAL DISPLAY UNITS

PART 1 - GENERAL

1.01 SUMMARY

A. Section includes visual display board assemblies.

1.02 PREINSTALLATION MEETINGS

A. Preinstallation Conference: Conduct conference at Project site.

1.03 ACTION SUBMITTALS

A. Product Data: For each type of product.

1. Include construction details, material descriptions, dimensions of individual components and profiles, finishes, and accessories for visual display units.

2. Include electrical characteristics for motorized units.

B. Shop Drawings: For visual display units.

1. Include plans, elevations, sections, details, and attachment to other work.

2. Show locations of panel joints. Show locations of field-assembled joints for factory-fabricated units too large to ship in one piece.

C. Samples: For each type of visual display unit indicated.

D. Product Schedule: For visual display units.

1.04 INFORMATIONAL SUBMITTALS

A. Sample Warranties: For manufacturer's special warranties.

1.05 CLOSEOUT SUBMITTALS

A. Maintenance Data: For visual display units to include in maintenance manuals.

1.06 DELIVERY, STORAGE, AND HANDLING

A. Deliver factory-fabricated visual display units completely assembled in one piece. If dimensions exceed maximum manufactured unit size, or if unit size is impracticable to ship in one piece, provide two or more pieces with joints in locations indicated on approved Shop Drawings.

1.07 FIELD CONDITIONS

A. Environmental Limitations: Do not deliver or install visual display units until spaces are enclosed and weathertight, wet-work in spaces is complete and dry, work above ceilings is complete, and temporary HVAC system is operating and maintaining ambient temperature and humidity conditions at occupancy levels during the remainder of the construction period.

1.08 WARRANTY

A. Special Warranty for Porcelain-Enamel Face Sheets: Manufacturer agrees to repair or replace porcelain-enamel face sheets that fail in materials or workmanship within specified warranty period.

1. Failures include, but are not limited to, the following:

a. Surfaces lose original writing and erasing qualities.
b. Surfaces exhibit crazing, cracking, or flaking.

2. Warranty Period: 50 years from date of Substantial Completion.

PART 2 - PRODUCTS

2.01 PERFORMANCE REQUIREMENTS

A. Surface-Burning Characteristics: Comply with ASTM E 84; testing by a qualified testing agency. Identify products with appropriate markings of applicable testing agency.

1. Flame-Spread Index: 25 or less.
2. Smoke-Developed Index: 450 or less.

2.02 VISUAL DISPLAY BOARD ASSEMBLIES

A. Manufacturers: Subject to compliance with requirements, available manufacturers offering products that may be incorporated into the Work include, but are not limited to the following:

1. Claridge Products and Equipment, Inc.
2. Peter Pepper Products, Inc.
3. Platinum Visual Systems.

B. Marker Board Units:

1. Visual Display Board Assembly: Field or factory fabricated.

a. Assembly: Markerboard with display rail.
b. Corners: Square.
c. Width and Height: As indicated on Drawings.

2. Markerboard Panel: Porcelain-enamel-faced markerboard panel on core indicated.

a. Color: White.

3. Aluminum Frames and Trim: Fabricated from not less than 0.062-inch-thick, extruded aluminum; standard size and shape.

    a. Field-Applied Trim: Manufacturer's standard, snap-on trim with no visible screws or exposed joints.
    b. Aluminum Finish: Clear anodic finish.

4. Joints: Make joints only where total length exceeds maximum manufactured length. Fabricate with minimum number of joints, as indicated on approved Shop Drawings.
5. Chalktray: Manufacturer's standard; continuous.

    a. Solid Type: Extruded aluminum with ribbed section and smoothly curved exposed ends.

6. Display Rail: Manufacturer's standard, extruded-aluminum display rail with plastic-impregnated-cork insert, end stops, designed to hold accessories.

    a. Size: 6 inches high by full length of visual display unit unless otherwise indicated.
    b. Map Hooks and Clips: Two map hooks with flexible metal clips for every 30 inches of display rail or fraction thereof.
    c. Aluminum Color: Match finish of visual display assembly trim.

7. Starter Kits: Provide starter kits for each markerboard, visual display conference unit, and installation of visual display wall covering consisting of the following:

    a. Not less than six markers in assorted colors.
    b. Markerboard cleaner in spray bottle, not less than 4 fl. oz.
    c. One eraser for each markerboard surface, but not less than 2 per room.

2.03 MARKERBOARD PANELS

A. Porcelain-Enamel Markerboard Panels: Balanced, high-pressure, factory-laminated markerboard assembly of three-ply construction, consisting of moisture-barrier backing, core material, and porcelain-enamel face sheet with low-gloss finish. Laminate panels under heat and pressure with manufacturer's standard, flexible waterproof adhesive.

1. Face Sheet Thickness: Not less than 0.021-inch uncoated base metal thickness.
2. Manufacturer's Standard Core: Minimum 1/4-inch thick, with manufacturer's standard moisture-barrier backing.
3. Laminating Adhesive: Manufacturer's standard moisture-resistant thermoplastic type.

2.04 MATERIALS

A. Porcelain-Enamel Face Sheet: PEI-1002, with face sheet manufacturer's standard two- or three-coat process.

B. Plastic-Impregnated Cork Sheet: Seamless, homogeneous, self-sealing sheet consisting of granulated cork, linseed oil, resin binders, and dry pigments that are mixed and calendared onto fabric backing; with washable vinyl finish and integral color throughout with surface-burning characteristics indicated.

C. Extruded Aluminum: ASTM B 221, Alloy 6063.

D. Adhesives for Field Application: Mildew-resistant, nonstaining adhesive for use with specific type of panels, sheets, or assemblies; and for substrate application; as recommended in writing by visual display unit manufacturer.

2.05 ALUMINUM FINISHES

A. Clear Anodic Finish: AAMA 611, AA-M12C22A31, Class II, 0.010 mm or thicker.

PART 3 - EXECUTION

3.01 INSTALLATION

A. General: Install visual display surfaces in locations and at mounting heights indicated on Drawings, or if not indicated, at heights indicated below. Keep perimeter lines straight, level, and plumb. Provide grounds, clips, backing materials, adhesives, brackets, anchors, trim, and accessories necessary for complete installation.

3.02 INSTALLATION OF FIELD-FABRICATED VISUAL DISPLAY BOARDS AND ASSEMBLIES

A. Field-Assembled Visual Display Units: Coordinate field-assembled units with grounds, trim, and accessories indicated. Join parts with a neat, precision fit.

1. Make joints only where total length exceeds maximum manufactured length. Fabricate with minimum number of joints, balanced around center of board, as as indicated on approved Shop Drawings.
2. Provide manufacturer's standard vertical-joint spline system between abutting sections of markerboards.
3. Provide manufacturer's standard mullion trim at joints between markerboards and tackboards of combination units.
4. Where size of visual display boards or other conditions require support in addition to normal trim, provide structural supports or modify trim as indicated or as selected by Architect from manufacturer's standard structural support accessories to suit conditions indicated.

3.03 INSTALLATION OF FACTORY-FABRICATED VISUAL DISPLAY BOARDS AND ASSEMBLIES

A. Visual Display Boards: Attach concealed clips, hangers, and grounds to wall surfaces and to visual display boards with fasteners at not more than 16 inches o.c. Secure both top and bottom of boards to walls.

1. Field-Applied Aluminum Trim: Attach trim over edges of visual display boards and conceal grounds and clips. Attach trim to boards with fasteners at not more than 24 inches o.c.

   a. Attach chalktrays to boards with fasteners at not more than 12 inches o.c.

3.04 CLEANING AND PROTECTION

A. Clean visual display surfaces according to manufacturer's written instructions. Attach one cleaning label to visual display surface in each room.

B. Touch up factory-applied finishes to restore damaged or soiled areas.

C. Cover and protect visual display surfaces after installation and cleaning.

END OF SECTION

SECTION 10 14 16
PLAQUES

SECTION 10 14 16
PLAQUES

PART 1 - GENERAL

1.01 SUMMARY

A. Section includes:

1. Dedication plaques.

1.02 ACTION SUBMITTALS

A. Product Data: For each type of product.

B. Shop Drawings: For plaques.

1. Include fabrication and installation details and attachments to other work.
2. Show plaque mounting heights, locations of supplementary supports to be provided by others, and accessories.
3. Show message list, typestyles, graphic elements, and layout for each plaque at least half size.

C. Samples: For each exposed product and for each color and texture specified.

D. Plaque Schedule: Use same designations specified or indicated on Drawings or in a plaque or sign schedule.

1.03 INFORMATIONAL SUBMITTALS

A. Sample warranty.

1.04 CLOSEOUT SUBMITTALS

A. Maintenance data.

1.05 WARRANTY

A. Special Warranty: Manufacturer agrees to repair or replace components of plaques that fail in materials or workmanship within specified warranty period.

1. Warranty Period: Five years from date of Substantial Completion.

PART 2 - PRODUCTS

2.01 DEDICATION PLAQUES

A. Cast Plaque: Plaque with background texture, border, and characters having uniform faces, sharp corners, and precisely formed lines and profiles; and as follows:

1. Manufacturers: Subject to compliance with requirements, available manufacturers offering products that may be incorporated into the Work include, but are not limited to the following:

    a. APCO Graphics, Inc.
    b. Matthews International Corporation; Bronze Division.
    c. Metallic Arts.
    d. Southwell Company (The).

2. Plaque Material: Cast bronze.
3. Plaque Thickness: 0.25 inch.
4. Finishes:

    a. Integral Metal Finish: Antique oxidized.
    b. Overcoat: Manufacturer's standard baked-on clear coating.

5. Background Texture: Stipple.
6. Integrally Cast Border Style: Square single line, polished.
7. Mounting: Concealed studs.
8. Face Dimension: 24 inches x 36 inches, or as otherwise indicated on Drawings.

2.02 MATERIALS

A. Aluminum Castings: ASTM B 26/B 26M, alloy and temper recommended by plaque manufacturer for casting process used and for type of use and finish indicated.

B. Bronze Castings: Alloy UNS No. C86500 (No. 1 manganese bronze).

2.03 ACCESSORIES

A. Fasteners and Anchors: Manufacturer's standard as required for secure anchorage of plaques, noncorrosive and compatible with each material joined, and complying with the following:

1. Use concealed fasteners and anchors unless indicated to be exposed.
2. For exterior exposure, furnish nonferrous-metal devices unless otherwise indicated.
3. Plaque Mounting Fasteners:

a. Concealed Studs: Concealed (blind), threaded studs welded or brazed to back of plaque, screwed into back of plaque, or screwed into tapped lugs cast integrally into back of plaque, unless otherwise indicated.

B. Bituminous Paint: Cold-applied asphalt emulsion complying with ASTM D 1187.

2.04 FABRICATION

A. General: Provide manufacturer's standard plaques according to requirements indicated.

1. Provide welds and brazes behind finished surfaces without distorting or discoloring exposed side. Clean exposed welded and brazed connections of flux, and dress exposed and contact surfaces.
2. Conceal connections if possible; otherwise, locate connections where they are inconspicuous.
3. Provide rebates, lugs, and brackets necessary to assemble components and to attach to existing work. Drill and tap for required fasteners. Use concealed fasteners where possible; use exposed fasteners that match plaque finish.
4. Castings: Fabricate castings free of warp, cracks, blowholes, pits, scale, sand holes, and other defects that impair appearance or strength. Grind, wire brush, sandblast, and buff castings to remove seams, gate marks, casting flash, and other casting marks before finishing.

2.05 GENERAL FINISH REQUIREMENTS

A. Protect mechanical finishes on exposed surfaces from damage by applying a strippable, temporary protective covering before shipping.

B. Appearance of Finished Work: Noticeable variations in same piece are not acceptable. Variations in appearance of adjoining components are acceptable if they are within the range of approved Samples and are assembled or installed to minimize contrast.

C. Organic, Anodic, and Chemically Produced Finishes: Apply to formed metal after fabrication but before applying contrasting polished finishes on raised features unless otherwise indicated.

2.06 ALUMINUM FINISHES

A. Baked-Enamel or Powder-Coat Finish: AAMA 2603 except with a minimum dry film thickness of 1.5 mils. Comply with coating manufacturer's written instructions for cleaning, conversion coating, and applying and baking finish.

PART 3 - EXECUTION

3.01 INSTALLATION

A. General: Install plaques using mounting methods indicated and according to manufacturer's written instructions.

1. Install plaques level, plumb, true to line, and at locations and heights indicated, with plaque surfaces free of distortion and other defects in appearance.
2. Install plaques so they do not protrude or obstruct according to the accessibility standard.
3. Before installation, verify that plaque surfaces are clean and free of materials or debris that would impair installation.

B. Mounting Methods:

1. Concealed Studs: Using a template, drill holes in substrate aligning with studs on back of plaque. Remove loose debris from hole and substrate surface.

    a. Masonry Substrates: Fill holes with adhesive. Leave recess space in hole for displaced adhesive. Place plaque in position and push until flush to surface, embedding studs in holes. Temporarily support plaque in position until adhesive fully sets.

    b. Thin or Hollow Surfaces: Place plaque in position and flush to surface, install washers and nuts on studs projecting through opposite side of surface, and tighten.

C. Remove temporary protective coverings and strippable films as plaques are installed.

END OF SECTION

SECTION 10 14 19
DIMENSIONAL LETTER SIGNAGE

PART 1 - GENERAL

1.01 SUMMARY

A. Section includes:

1. Cast dimensional characters.
2. Cutout dimensional characters.

1.02 COORDINATION

A. Furnish templates for placement of electrical service embedded in permanent construction by other installers.

1.03 ACTION SUBMITTALS

A. Product Data: For each type of product.

B. Shop Drawings: For dimensional letter signs.

1. Include fabrication and installation details and attachments to other work.
2. Show sign mounting heights, locations of supplementary supports to be provided by others, and accessories.
3. Show message list, typestyles, graphic elements, and layout for each sign at least half size.

C. Samples for Initial Selection: For each type of sign assembly, exposed component, and exposed finish.

D. Samples for Verification: For each type of sign assembly showing all components and with the required finish(es), in manufacturer's standard size unless otherwise indicated and as follows:

1. Dimensional Characters: Full-size Sample of each type of dimensional character.

E. Sign Schedule: Use same designations specified or indicated on Drawings or in a sign schedule.

1.04 INFORMATIONAL SUBMITTALS

A. Sample Warranty: For special warranty.

1.05 CLOSEOUT SUBMITTALS

A. Maintenance Data: For signs to include in maintenance manuals.

1.06 QUALITY ASSURANCE

A. Installer Qualifications: An entity that employs installers and supervisors who are trained and approved by manufacturer.

1.07 FIELD CONDITIONS

A. Field Measurements: Verify locations of electrical service embedded in permanent construction by other installers by field measurements before fabrication, and indicate measurements on Shop Drawings.

1.08 WARRANTY

A. Special Warranty: Manufacturer agrees to repair or replace components of signs that fail in materials or workmanship within specified warranty period.

1. Failures include, but are not limited to, the following:

a. Deterioration of finishes beyond normal weathering.
b. Separation or delamination of sheet materials and components.

2. Warranty Period: Five years from date of Substantial Completion.

PART 2 - PRODUCTS

2.01 PERFORMANCE REQUIREMENTS

A. Thermal Movements: For exterior fabricated channel dimensional characters, allow for thermal movements from ambient and surface temperature changes.

1. Temperature Change: 120 deg F, ambient; 180 deg F, material surfaces.

B. Electrical Components, Devices, and Accessories: Listed and labeled as defined in NFPA 70, by a qualified testing agency, and marked for intended location and application.

2.02 DIMENSIONAL CHARACTERS

A. Cutout Characters: Characters with uniform faces; square-cut, smooth, eased edges; precisely formed lines and profiles; and as follows:

1. Manufacturers: Subject to compliance with requirements, available manufacturers offering products that may be incorporated into the Work include, but are not limited to, the following:

    a. ASI Sign Systems, Inc.
    b. InPro Corporation (IPC).
    c. Matthews International Corporation; Bronze Division.
    d. Metallic Arts.
    e. National Signs.
    f. Southwell Company (The).

2. Character Material: Sheet or plate aluminum.
3. Character Height: As indicated.
4. Thickness: Manufacturer's standard for size of character.
5. Finishes:

    a. Painted in color as selected by Architect from manufacturer's full range.

6. Mounting: Projecting studs.

B. Cast Characters: Characters with uniform faces, sharp corners, and precisely formed lines and profiles, and as follows:

1. Manufacturers: Subject to compliance with requirements, available manufacturers offering products that may be incorporated into the Work include, but are not limited to the following:

    a. ASI Sign Systems, Inc.
    b. Matthews International Corporation; Bronze Division.
    c. Metal Arts.
    d. Metallic Arts.
    e. Southwell Company (The).

2. Character Material: Cast aluminum.
3. Character Height: As indicated on Drawings.
4. Thickness: Manufacturer's standard for size of character.
5. Finishes:

    a. Integral Aluminum Finish: Clear anodized.

6. Mounting: Projecting studs.
7. Typeface: As selected by Architect.

2.03 DIMENSIONAL CHARACTER MATERIALS

A. Aluminum Sheet and Plate: ASTM B 209, alloy and temper recommended by aluminum producer and finisher for type of use and finish indicated.

B. Paints and Coatings for Sheet Materials: Inks, dyes, and paints that are recommended by manufacturer for optimum adherence to surface and are UV and water resistant for colors and exposure indicated.

2.04 ACCESSORIES

A. Fasteners and Anchors: Manufacturer's standard as required for secure anchorage of signage, noncorrosive and compatible with each material joined, and complying with the following:

1. Use concealed fasteners and anchors unless indicated to be exposed.
2. For exterior exposure, furnish nonferrous-metal or stainless-steel devices unless otherwise indicated.
3. Exposed Metal-Fastener Components, General:

    a. Fabricated from same basic metal and finish of fastened metal unless otherwise indicated.
    b. Fastener Heads: For nonstructural connections, use flathead or oval countersunk screws and bolts with tamper-resistant spanner-head slots unless otherwise indicated.

4. Sign Mounting Fasteners:

    a. Projecting Studs: Threaded studs with sleeve spacer, welded or brazed to back of sign material, screwed into back of sign assembly, or screwed into tapped lugs cast integrally into back of cast sign material, unless otherwise indicated.

B. Bituminous Paint: Cold-applied asphalt emulsion complying with ASTM D 1187.

2.05 FABRICATION

A. General: Provide manufacturer's standard sign assemblies according to requirements indicated.

1. Preassemble signs and assemblies in the shop to greatest extent possible. Disassemble signs and assemblies only as necessary for shipping and handling limitations. Clearly mark units for reassembly and installation; apply markings in locations concealed from view after final assembly.
2. Mill joints to a tight, hairline fit. Form assemblies and joints exposed to weather to resist water penetration and retention.
3. Comply with AWS for recommended practices in welding and brazing. Provide welds and brazes behind finished surfaces without distorting or discoloring exposed side. Clean exposed welded and brazed connections of flux, and dress exposed and contact surfaces.
4. Conceal connections if possible; otherwise, locate connections where they are inconspicuous.
5. Internally brace signs for stability and for securing fasteners.
6. Provide rebates, lugs, and brackets necessary to assemble components and to attach to existing work. Drill and tap for required fasteners. Use concealed fasteners where possible; use exposed fasteners that match sign finish.

7. Castings: Fabricate castings free of warp, cracks, blowholes, pits, scale, sand holes, and other defects that impair appearance or strength. Grind, wire brush, sandblast, and buff castings to remove seams, gate marks, casting flash, and other casting marks before finishing.

2.06 GENERAL FINISH REQUIREMENTS

A. Protect mechanical finishes on exposed surfaces from damage by applying a strippable, temporary protective covering before shipping.

B. Appearance of Finished Work: Noticeable variations in same piece are not acceptable. Variations in appearance of adjoining components are acceptable if they are within the range of approved Samples and are assembled or installed to minimize contrast.

2.07 ALUMINUM FINISHES

A. Baked-Enamel or Powder-Coat Finish: AAMA 2603 except with a minimum dry film thickness of 1.5 mils. Comply with coating manufacturer's written instructions for cleaning, conversion coating, and applying and baking finish.

PART 3 - EXECUTION

3.01 EXAMINATION

A. Examine substrates, areas, and conditions, with Installer present, for compliance with requirements for installation tolerances and other conditions affecting performance of signage work.

B. Verify that sign-support surfaces are within tolerances to accommodate signs without gaps or irregularities between backs of signs and support surfaces unless otherwise indicated.

C. Verify that electrical service is correctly sized and located to accommodate signs.

D. Proceed with installation only after unsatisfactory conditions have been corrected.

3.02 INSTALLATION

A. General: Install signs using mounting methods indicated and according to manufacturer's written instructions.

1. Install signs level, plumb, true to line, and at locations and heights indicated, with sign surfaces free of distortion and other defects in appearance.
2. Before installation, verify that sign surfaces are clean and free of materials or debris that would impair installation.

3. Corrosion Protection: Coat concealed surfaces of exterior aluminum in contact with grout, concrete, masonry, wood, or dissimilar metals, with a heavy coat of bituminous paint.

B. Mounting Methods: Projecting Studs: Using a template, drill holes in substrate aligning with studs on back of sign. Remove loose debris from hole and substrate surface.

1. Masonry Substrates: Fill holes with adhesive. Leave recess space in hole for displaced adhesive. Place spacers on studs, place sign in position, and push until spacers are pinched between sign and substrate, embedding the stud ends in holes. Temporarily support sign in position until adhesive fully sets.
2. Thin or Hollow Surfaces: Place spacers on studs, place sign in position with spacers pinched between sign and substrate, and install washers and nuts on stud ends projecting through opposite side of surface, and tighten.

3.03 ADJUSTING AND CLEANING

A. Remove and replace damaged or deformed characters and signs that do not comply with specified requirements. Replace characters with damaged or deteriorated finishes or components that cannot be successfully repaired by finish touchup or similar minor repair procedures.

B. Remove temporary protective coverings and strippable films as signs are installed.

C. On completion of installation, clean exposed surfaces of signs according to manufacturer's written instructions, and touch up minor nicks and abrasions in finish. Maintain signs in a clean condition during construction and protect from damage until acceptance by Owner.

END OF SECTION

SECTION 10 14 23
PANEL SIGNAGE

PART 1 - GENERAL

1.01 SUMMARY

A. Section includes panel signs for each door.

B. Wayfinding signage.

1.02 ALLOWANCES

A. Refer to Division 01 Section "Allowances" for description of allowances affecting items specified in this Section.

1.03 DEFINITIONS

A. Accessible: In accordance with the accessibility standard.

B. Illuminated: Illuminated by lighting source integrally constructed as part of the sign unit.

1.04 COORDINATION

A. Furnish templates for placement of sign-anchorage devices embedded in permanent construction by other installers.

B. Furnish templates for placement of electrical service embedded in permanent construction by other installers.

1.05 ACTION SUBMITTALS

A. Product Data: For each type of product.

B. Shop Drawings: For panel signs.

1. Include fabrication and installation details and attachments to other work.
2. Show sign mounting heights, locations of supplementary supports to be provided by others, and accessories.
3. Show message list, typestyles, graphic elements, including raised characters and Braille, and layout for each sign at least half size.

C. Samples for Initial Selection: For each type of sign assembly, exposed component, and exposed finish.

1. Include representative Samples of available typestyles and graphic symbols.

D. Samples for Verification: For each type of sign assembly showing all components and with the required finish(es), in manufacturer's standard size unless otherwise indicated and as follows:

1. Panel Signs: Full-size Sample.

E. Sign Schedule: Use same designations specified or indicated on Drawings or in a sign schedule.

1.06 INFORMATIONAL SUBMITTALS

A. Sample Warranty: For special warranty.

1.07 CLOSEOUT SUBMITTALS

A. Maintenance Data: For signs to include in maintenance manuals.

1.08 WARRANTY

A. Special Warranty: Manufacturer agrees to repair or replace components of signs that fail in materials or workmanship within specified warranty period.

1. Failures include, but are not limited to, the following:

   a. Deterioration of finishes beyond normal weathering.
   b. Deterioration of embedded graphic image.
   c. Separation or delamination of sheet materials and components.

2. Warranty Period: Five years from date of Substantial Completion.

PART 2 - PRODUCTS

2.01 PERFORMANCE REQUIREMENTS

A. Accessibility Standard: Comply with applicable provisions in the “Texas Accessibility Standards” (TAS) for signs.

2.02 SIGNS

A. Provide panel signage under an allowance. Include installation in base proposal.

PART 3 - EXECUTION

3.01 EXAMINATION

A. Examine substrates, areas, and conditions, with Installer present, for compliance with requirements for installation tolerances and other conditions affecting performance of signage work.

B. Verify that sign-support surfaces are within tolerances to accommodate signs without gaps or irregularities between backs of signs and support surfaces unless otherwise indicated.

C. Proceed with installation only after unsatisfactory conditions have been corrected.

3.02 INSTALLATION

A. General: Install signs using mounting methods indicated and according to manufacturer's written instructions.

1. Install signs level, plumb, true to line, and at locations and heights indicated, with sign surfaces free of distortion and other defects in appearance.
2. Install signs so they do not protrude or obstruct according to the accessibility standard.
3. Before installation, verify that sign surfaces are clean and free of materials or debris that would impair installation.

B. Accessible Signage: Install in locations on walls as indicated and according to accessibility standard.

C. Mounting Methods: Install panel signs with two-face tape and in a bed of adhesive.

1. Adhesive: Clean bond-breaking materials from substrate surface and remove loose debris. Apply linear beads or spots of adhesive symmetrically to back of sign and of suitable quantity to support weight of sign after cure without slippage. Keep adhesive away from edges to prevent adhesive extrusion as sign is applied and to prevent visibility of cured adhesive at sign edges. Place sign in position, and push to engage adhesive. Temporarily support sign in position until adhesive fully sets.
2. Two-Face Tape: Clean bond-breaking materials from substrate surface and remove loose debris. Apply tape strips symmetrically to back of sign and of suitable quantity to support weight of sign without slippage. Keep strips away from edges to prevent visibility at sign edges. Place sign in position, and push to engage tape adhesive.

D. Signs Mounted on Glass: Provide opaque sheet matching sign material and finish onto opposite side of glass to conceal back of sign.

3.03 ADJUSTING AND CLEANING

A. Remove and replace damaged or deformed signs and signs that do not comply with specified requirements. Replace signs with damaged or deteriorated finishes or components that cannot be successfully repaired by finish touchup or similar minor repair procedures.

B. Remove temporary protective coverings and strippable films as signs are installed.

C. On completion of installation, clean exposed surfaces of signs according to manufacturer's written instructions, and touch up minor nicks and abrasions in finish. Maintain signs in a clean condition during construction and protect from damage until acceptance by Owner.

END OF SECTION

SECTION 10 21 13.17
PHENOLIC-CORE TOILET COMPARTMENTS

PART 1 - GENERAL

1.01 SUMMARY

A. Section includes phenolic-core toilet compartments configured as toilet enclosures and urinal screens.

B. Related Sections include Division 10 Section “Toilet, Bath, and Laundry Accessories” for toilet tissue dispensers, grab bars, purse shelves, and similar accessories mounted on toilet compartments.

1.02 ACTION SUBMITTALS

A. Product Data: For each type of product.

1. Include construction details, material descriptions, dimensions of individual components and profiles, and finishes for toilet compartments.

B. Shop Drawings: For toilet compartments.

1. Include plans, elevations, sections, details, and attachment details.
2. Show locations of cutouts for compartment-mounted toilet accessories.
3. Show locations of centerlines of toilet fixtures.
4. Show locations of floor drains.
5. Show overhead support or bracing locations.

C. Samples for Initial Selection: For each type of toilet compartment material indicated.

1. Include Samples of hardware and accessories involving material and color selection.

D. Samples for Verification: For the following products, in manufacturer's standard sizes unless otherwise indicated:

1. Each type of material, color, and finish required for toilet compartments, prepared on 6-inch-square Samples of same thickness and material indicated for Work.
2. Each type of hardware and accessory.

E. Product Schedule: For toilet compartments, prepared by or under the supervision of supplier, detailing location and selected colors for toilet compartment material.

1.03 CLOSEOUT SUBMITTALS

A. Maintenance Data: For toilet compartments to include in maintenance manuals.

1.04 PROJECT CONDITIONS

A. Field Measurements: Verify actual locations of toilet fixtures, walls, columns, ceilings, and other construction contiguous with toilet compartments by field measurements before fabrication.

PART 2 - PRODUCTS

2.01 PERFORMANCE REQUIREMENTS

A. Surface-Burning Characteristics: Comply with ASTM E 84; testing by a qualified testing agency. Identify products with appropriate markings of applicable testing agency.

1. Flame-Spread Index: 200 or less.
2. Smoke-Developed Index: 450 or less.

B. Regulatory Requirements: Comply with applicable provisions in the TDLR “2012 Texas Accessibility Standards” (TAS) for toilet compartments designated as accessible.

2.02 PHENOLIC-CORE TOILET COMPARTMENTS

A. Basis-of-Design: Design is based Bobrick Washroom Equipment, Inc. “Evolve.” Subject to compliance with requirements, available manufacturers offering products that may be incorporated into the Work include, but are not limited to the following:

1. Accurate Partitions Corp.; ASI Group.
2. Ampco Products, LLC.
3. Bradley Corporation.
4. Columbia Lockers; Partition Systems International of South Carolina.
5. Marlite.
6. Metpar Corp.
7. Tex-Lam Manufacturing, Inc.

B. Toilet-Enclosure Style: Overhead braced.

C. Urinal-Screen Style: Wall hung.

D. Door, Panel, and Pilaster Construction: Solid phenolic-core panel material with melamine facing on both sides fused to substrate during panel manufacture (not separately laminated), and with eased and polished edges and no-sightline system. Provide minimum 3/4-inch-thick doors and pilasters and minimum 1/2-inch-thick panels.

E. Pilaster Shoes and Sleeves (Caps): Formed from stainless-steel sheet, not less than 0.031-inch nominal thickness and 3 inches high, finished to match hardware.

F. Brackets (Fittings):

1. Full-Height (Continuous) Type: Manufacturer's standard design; aluminum.

G. Phenolic-Panel Finish:

1. Facing Sheet Finish: One color and pattern in each room.
2. Color and Pattern: As selected by Architect.
3. Edge Color: Manufacturer's standard.

2.03 HARDWARE AND ACCESSORIES

A. Hardware and Accessories: Manufacturer's heavy-duty operating hardware and accessories.

1. Hinges: Manufacturer's minimum 0.062-inch-thick stainless-steel paired, self-closing type that can be adjusted to hold doors open at any angle up to 90 degrees, allowing emergency access by lifting door. Mount with through-bolts.
2. Latch and Keeper: Manufacturer's heavy-duty surface-mounted cast-stainless-steel latch unit designed to resist damage due to slamming, with combination rubber-faced door strike and keeper, and with provision for emergency access. Provide units that comply with regulatory requirements for accessibility at compartments designated as accessible. Mount with through-bolts.
3. Coat Hook: Manufacturer's heavy-duty combination cast-stainless-steel hook and rubber-tipped bumper, sized to prevent in-swinging door from hitting compartment-mounted accessories. Mount with through-bolts.
4. Door Bumper: Manufacturer's heavy-duty rubber-tipped cast-stainless-steel bumper at out-swinging doors. Mount with through-bolts.
5. Door Pull: Manufacturer's heavy-duty cast-stainless-steel pull at out-swinging doors that complies with regulatory requirements for accessibility. Provide units on both sides of doors at compartments designated as accessible. Mount with through-bolts.

B. Overhead Bracing: Manufacturer's standard continuous, extruded-aluminum head rail with antigrip profile and in manufacturer's standard finish.

C. Anchorages and Fasteners: Manufacturer's standard exposed fasteners of stainless steel, finished to match the items they are securing, with theft-resistant-type heads. Provide sex-type bolts for through-bolt applications. For concealed anchors, use stainless-steel, hot-dip galvanized-steel, or other rust-resistant, protective-coated steel compatible with related materials.

2.04 MATERIALS

A. Aluminum Castings: ASTM B 26/B 26M.

B. Aluminum Extrusions: ASTM B 221.

2.05 FABRICATION

A. Fabrication, General: Fabricate toilet compartment components to sizes indicated. Coordinate requirements and provide cutouts for through-partition toilet accessories where required for attachment of toilet accessories.

B. Overhead-Braced Units: Provide manufacturer's standard corrosion-resistant supports, leveling mechanism, and anchors at pilasters to suit floor conditions. Provide shoes at pilasters to conceal supports and leveling mechanism.

C. Door Size and Swings: Unless otherwise indicated, provide 24-inch-wide in-swinging doors for standard toilet compartments and 36-inch-wide out-swinging doors with a minimum 32-inch-wide clear opening for compartments designated as accessible.

PART 3 - EXECUTION

3.01 EXAMINATION

A. Examine areas and conditions, with Installer present, for compliance with requirements for fastening, support, alignment, operating clearances, and other conditions affecting performance of the Work.

1. Confirm location and adequacy of blocking and supports required for installation.

B. Proceed with installation only after unsatisfactory conditions have been corrected.

3.02 INSTALLATION

A. General: Comply with manufacturer's written installation instructions. Install units rigid, straight, level, and plumb. Secure units in position with manufacturer's recommended anchoring devices.

1. Maximum Clearances:

   a. Pilasters and Panels: 1/2 inch.
   b. Panels and Walls: 1/2 inch.

2. Full-Height (Continuous) Brackets: Secure panels to walls and to pilasters with full-height brackets.

   a. Locate bracket fasteners so holes for wall anchors occur in masonry or tile joints.
   b. Align brackets at pilasters with brackets at walls.

B. Overhead-Braced Units: Secure pilasters to floor and level, plumb, and tighten. Set pilasters with anchors penetrating not less than 1-3/4 inches into structural floor unless otherwise indicated in manufacturer's written instructions. Secure continuous head rail to each pilaster with no fewer than two fasteners. Hang doors to align tops of doors with tops of panels, and adjust so tops of doors are parallel with overhead brace when doors are in closed position.

C. Urinal Screens: Attach with anchoring devices to suit supporting structure. Set units level and plumb, rigid, and secured to resist lateral impact.

3.03 ADJUSTING

A. Hardware Adjustment: Adjust and lubricate hardware according to hardware manufacturer's written instructions for proper operation. Set hinges on in-swinging doors to hold doors open approximately 30 degrees from closed position when unlatched. Set hinges on out-swinging doors to return doors to fully closed position.

END OF SECTION

SECTION 10 22 13
WIRE MESH PARTITIONS

PART 1 - GENERAL

1.01 SUMMARY

A. Section includes:

1. Heavy-duty wire mesh partitions.

1.02 DEFINITIONS

A. Intermediate Crimp: Wires pass over one and under the next adjacent wire in both directions, with wires crimped before weaving and with extra crimps between the intersections.

B. Lock Crimp: Deep crimps at points of the intersection that lock wires securely in place.

1.03 ACTION SUBMITTALS

A. Shop Drawings:

1. Include plans, elevations, sections, and attachment details.
2. Indicate clearances required for operation of doors.

B. Delegated Design Submittals: For wire mesh partitions indicated to comply with performance requirements and design criteria, including analysis data signed and sealed by the qualified professional engineer responsible for their preparation.

1.04 INFORMATIONAL SUBMITTALS

A. Certificates:

1. Welding certificates.

B. Qualification Statements: For Installer.

C. Delegated design engineer qualifications.

1.05 CLOSEOUT SUBMITTALS

A. Operation and Maintenance Data: For wire mesh partition hardware.

1.06 QUALITY ASSURANCE

A. Qualifications:

1. Installers: Authorized representative who is trained and approved by manufacturer.
2. Welding Qualifications: Qualify procedures and personnel in accordance with the following welding codes:

a. AWS D1.1/D1.1M.
b. AWS D1.3/D1.3M.

1.07 DELIVERY, STORAGE, AND HANDLING

A. Deliver wire mesh items palleted to provide protection during transit and Project-site storage. Use vented plastic.

B. Inventory wire mesh partition door hardware on receipt, and provide secure lockup for wire mesh partition door hardware delivered to Project site.

1. Tag each item or package separately with identification, and include basic installation instructions with each item or package.

1.08 FIELD CONDITIONS

A. Field Measurements: Verify actual dimensions of construction contiguous with wire mesh units by field measurements before fabrication.

PART 2 - PRODUCTS

2.01 MANUFACTURERS

A. Basis-of-Design: Design is based Acorn Wire & Iron Works, “Heavy Duty ^GA No. 135 System.” Subject to compliance with requirements, available manufacturers offering products that may be incorporated into the Work include, but are not limited to the following:

1. American Woven Wire Corporation.
2. California Wire Products Corporation.
3. Kenco Wire & Iron Products Inc.
4. King Wire Partitions, Inc.

2.02 SOURCE LIMITATIONS

A. For wire mesh products, obtain each color, grade, finish, type, and variety from single source with resources to provide products of consistent quality in appearance and physical properties.

2.03 PERFORMANCE REQUIREMENTS

A. Delegated Design: Engage a qualified professional engineer, as defined in Section 014000 “Quality Requirements,” to design wire mesh units.

B. Structural Performance: Wire mesh units to withstand the effects of gravity loads and the following loads and stresses within limits and under conditions indicated.

1. Concentrated load of 50 lbf applied horizontally on an area of 1 sq. ft. at any location on a panel.
2. Total load of 200 lbf applied uniformly over each panel.
3. Concentrated load and total load need not be assumed to act concurrently.

C. Regulatory Requirements: Comply with applicable provisions in the TDLR “2012 Texas Accessibility Standards” (TAS) for doors and gates designated as accessible.

2.04 HEAVY-DUTY WIRE MESH PARTITIONS

A. Mesh:

1. 0.192-inch-diameter, intermediate-crimp steel wire woven into 2-inch diamond mesh.

B. Vertical and Horizontal Panel Framing: 1-1/2-by-3/4-by-1/8-inch cold-rolled steel channels; with holes for 3/8-inch-diameter bolts not more than 12 inches o.c.

C. Horizontal Panel Stiffeners: Two cold-rolled steel channels, 1 by 1/2 by 1/8 inch, bolted or riveted toe to toe through mesh.

D. Top Capping Bars: 3-by-1-inch steel channels.

E. Posts for 90-Degree Corners: 1-1/2-by-1-1/2-by-1/8-inch steel angles or tubes, with holes for 3/8-inch-diameter bolts aligning with bolt holes in vertical framing; with 1/4-inch steel base plates.

F. Posts for Other-Than-90-Degree Corners: 2-inch-OD by 1/8-inch steel pipe or round tube, with holes for 3/8-inch-diameter bolts aligning with bolt holes in vertical framing; with 1/4-inch steel base plates.

G. Adjustable Corner Posts: Two 1-1/2-by-3/4-by-1/8-inch cold-rolled, steel channels or 2-by-2-by-0.075-inch steel tubes connected by steel hinges at 36 inches o.c. attached to posts; with 1/4-inch-diameter bolt holes aligning with bolt holes in vertical framing; with 1/4-inch steel base plates.

H. Line Posts: 3-inch-by-4.1-lb or 3-1/2-by-1-1/4-by-1/8-inch steel channels; with 1/4-inch steel base plates.

I. Four-Way Intersection Posts: 2-by-2-by-0.075-inch steel tubes, with holes for 3/8-inch-diameter bolts aligned for bolting to adjacent panels; with 1/4-inch steel base plates.

J. Floor Shoes: Metal, not less than 2 inches high; sized to suit vertical framing, drilled for attachment to floor, and with setscrews for leveling adjustment.

K. Swinging Doors: Fabricated from same mesh as partitions, with framing fabricated from 1-1/2-by-3/4-by-1/8-inch steel channels, banded with 1-1/2-by-1/8-inch flat steel bar cover plates on four sides, and with 1/8-inch-thick angle strike bar and cover on strike jamb.

1. Hinges: Full-surface type, 3-1/2-by-3-1/2-inch steel, three per door; bolted, riveted, or welded to door and jamb framing.
2. Padlock Lug: Mortised into door framing and enclosed with steel cover.

L. Accessories:

2.05 WIRE MESH CEILINGS

A. Mesh, Framing, and Stiffeners: Fabricated from same mesh and framing as wire mesh partition panels.

B. Perimeter Partition Supports: 1-1/2-by-1-1/2-by-1/8-inch steel angle, with holes for 1/4-inch-diameter bolts aligned for bolting to top of wire mesh partitions and to sides of wire mesh ceiling panels.

C. Wall Supports: 1-1/2-by-1-1/2-by-1/8-inch steel angle punched for attachment to wall and wire mesh ceiling panels.

D. Intermediate Supports: Steel I-beams or rectangular tubes, as recommended by manufacturer.

E. Intermediate Support Posts: 2-by-2-by-1/8-inch steel tubes.

F. Finishes: Match adjacent wire mesh partitions.

2.06 MATERIALS

A. Steel Wire: ASTM A510/A510M.

B. Steel Plates, Channels, Angles, and Bars: ASTM A36/A36M.

C. Steel Sheet: Cold-rolled steel sheet, ASTM A1008/A1008M, Commercial Steel (CS), Type B.

D. Steel Pipe: ASTM A53/A53M, Schedule 40, unless another weight is indicated or required by structural loads.

E. Panel-to-Panel Fasteners: Manufacturer's standard steel bolts, nuts, and washers.

F. Post-Installed Anchors: Capable of sustaining, without failure, a load equal to 6 times the load imposed when installed in unit masonry and 4 times the load imposed when installed in concrete, as determined by testing in accordance with ASTM E488/E488M, conducted by a qualified independent testing agency.

1. Material for Interior Locations: Carbon-steel components are zinc plated to comply with ASTM B633 or ASTM F1941/F1941M, Class Fe/Zn 5, unless otherwise indicated.

G. Power-Driven Fasteners: ICC-ES AC70.

H. Shop Primers: Provide primers that comply with Section 099113 “Exterior Painting”

I. Universal Shop Primer: Fast-curing, lead- and chromate-free, universal modified-alkyd primer, complying with MPI#79.

1. Use primer containing pigments that make it easily distinguishable from zinc-rich primer.

J. Zinc-Rich Primer: Compatible with topcoat, complying with SSPC-Paint 20 or SSPC-Paint 29.

K. Galvanizing Repair Paint: High-zinc-dust-content paint for regalvanizing welds in steel, complying with SSPC-Paint 20.

2.07 FABRICATION

A. General: Fabricate wire mesh items from components of sizes not less than those indicated. Use larger-sized components as recommended by wire mesh item manufacturer. Furnish bolts, hardware, and accessories required for complete installation with manufacturer's standard finishes.

1. Fabricate wire mesh items to be readily disassembled.
2. Welding: Weld corner joints of framing and grind smooth, leaving no evidence of joint.

B. Heavy-Duty Wire Mesh Partitions: Fabricate wire mesh partitions with cutouts for pipes, ducts, beams, and other items indicated. Finish edges of cutouts to provide a neat, protective edge.

1. Mesh: Weld mesh to framing.
2. Framing: Fabricate framing with mortise-and-tenon corner construction.

   a. Provide horizontal stiffeners as indicated or, if not indicated, as required by panel height and as recommended by wire mesh partition manufacturer. Weld horizontal stiffeners to vertical framing.
   b. Fabricate four-way intersections using intersection posts.
   c. Fabricate partition and door framing with slotted holes for connecting adjacent panels.

3. Fabricate wire mesh partitions with 3 to 4 inches of clear space between finished floor and bottom horizontal framing.
4. Fabricate wire mesh partitions with bottom horizontal framing flush with finished floor.
5. Doors: Align bottom of door with bottom of adjacent panels.

   a. For doors that do not extend full height of partition, provide transom over door, fabricated from same mesh and framing as partition panels.

6. Hardware Preparation: Mortise, reinforce, drill, and tap doors and framing as required to install hardware.

C. Wire Mesh Ceilings: Fabricate wire mesh partitions with cutouts for pipes, ducts, beams, and other items indicated. Finish edges of cutouts to provide a neat, protective edge.

1. Mesh: Weld mesh to framing.
2. Framing: Fabricate framing with welded corner construction.

   a. Provide stiffeners as indicated or, if not indicated, as required by panel span and as recommended by wire mesh ceiling manufacturer. Weld stiffeners to framing.

D. Wire Mesh Stairway Partitions: Provide door jamb framing on each side of doors. Attach tamper shields centered behind exit devices.

2.08 STEEL AND IRON FINISHES

A. Galvanizing: Hot-dip galvanize items as indicated to comply with ASTM A153/A153M for steel and iron hardware and with ASTM A123/A123M for other steel and iron products.

   1. Do not quench or apply post-galvanizing treatments that might interfere with paint adhesion.

B. Preparation for Shop Priming Galvanized Items: After galvanizing, thoroughly clean items of grease, dirt, oil, flux, and other foreign matter, and treat with metallic phosphate process.

C. Preparation for Shop Priming: Prepare surfaces to comply with SSPC-SP 6/NACE No. 3, “Commercial Blast Cleaning.”

D. Shop Priming: Apply shop primer to uncoated surfaces of wire mesh units unless otherwise indicated. Comply with SSPC-PA 1, “Paint Application Specification No. 1: Shop, Field, and Maintenance Painting of Steel,” for shop painting.

E. Enamel Finish: Immediately after cleaning and pretreating, apply manufacturer's standard enamel finish, suitable for use indicated, with a minimum dry film thickness of 2 mils.

   1. Color and Gloss: As selected by Architect from manufacturer's full range.

F. Powder-Coat Finish: Immediately after cleaning and pretreating, apply manufacturer's standard baked-on powder-coat finish, suitable for use indicated, with a minimum dry film thickness of 2 mils.

   1. Color and Gloss: As selected by Architect from manufacturer's full range.

PART 3 - EXECUTION

3.01 EXAMINATION

A. Examine areas, with Installer present, for compliance with requirements for installation tolerances and other conditions affecting performance of the Work.

B. Examine floors for suitable conditions where wire mesh items will be installed.

C. Examine walls to which wire mesh items will be attached for properly located blocking, grounds, and other solid backing for attachment of support fasteners.

D. Proceed with installation only after unsatisfactory conditions have been corrected.

3.02 INSTALLATION OF WIRE MESH PARTITIONS

A. Anchor wire mesh partitions to floor with 3/8-inch-diameter, postinstalled expansion anchors at 12 inches o.c. through floor shoes located at each post and corner. Adjust wire mesh partition posts in floor shoes to achieve level and plumb installation.

B. Anchor wire mesh partitions to walls at 12 inches o.c. through back corner panel framing and as follows:

1. For concrete and solid masonry anchorage, use expansion anchors.
2. For steel-framed gypsum board assemblies, use lag bolts set into wood backing between studs. Coordinate with stud installation to locate backing members.
3. For steel-framed gypsum board assemblies, fasten brackets directly to steel framing or concealed reinforcements using self-tapping screws of size and type required to support structural loads.

C. Secure top capping bars to top framing channels with 1/4-inch-diameter, “U” bolts spaced not more than 28 inches o.c.

D. Provide line posts at locations indicated or, if not indicated, as follows:

1. On each side of sliding-door openings.
2. For partitions that are 7 to 9 ft. high, spaced at 15 to 20 ft. o.c.
3. For partitions that are 10 to 12 ft. high, located between every other panel.

E. Where standard-width wire mesh partition panels do not fill entire length of run, provide adjustable filler panels to fill openings.

F. Install doors complete with door hardware.

G. Install service windows complete with window hardware.

H. Weld or bolt sheet metal bases to wire mesh partitions and doors.

I. Bolt accessories to wire mesh partition framing.

3.03 REPAIR

A. Repair Painting:

1. Wire brush and clean rust spots, welds, and abraded areas immediately after installation, and apply repair paint with same material as used for shop painting to comply with SSPC-PA 1 requirements for touching up shop-painted surfaces.

a. Apply by brush or spray to provide a minimum 2.0-mil dry film thickness.

2. Wire brushing, cleaning, and repair painting of rust spots, welds, and abraded areas are included in Section 099113 “Exterior Painting” and Section 099123 “Interior Painting.”

B. Repair of Galvanized Surfaces: Clean field welds, bolted connections, and abraded areas and repair galvanizing to comply with ASTM A780/A780M.

3.04 ADJUSTING

A. Adjust moving parts to operate smoothly and easily, without binding or warping. Adjust hardware to function smoothly. Verify that latches and locks engage accurately and securely without forcing or binding.

3.05 PROTECTION

A. Remove and replace defective work, including doors and framing that are warped, bowed, or otherwise unacceptable.

END OF SECTION

SECTION 10 22 39
FOLDING PANEL PARTITIONS

PART 1 - GENERAL

1.01 SUMMARY

A. Section includes electrically operated, acoustical panel partitions.

B. Related Sections include:

1. Division 05 Section “Metal Fabrications” for supports that attach supporting tracks to overhead structural system.
2. Electrical and communications Sections for electrical service and connections for motor operators, controls, and limit switches and for system disconnect switches.

1.02 PREINSTALLATION MEETINGS

A. Preinstallation Conference: Conduct conference at Project site.

1.03 ACTION SUBMITTALS

A. Product Data: For each type of product.

B. Shop Drawings: For operable panel partitions.

1. Include plans, elevations, sections, details, and attachments to other work.
2. Indicate stacking and operating clearances. Indicate location and installation requirements for hardware and track, blocking, and direction of travel.
3. Include diagrams for power, signal, and control wiring.

C. Samples: For each exposed product and for each color and texture specified.

D. Delegated-Design Submittal: For operable panel partitions.

1.04 INFORMATIONAL SUBMITTALS

A. Coordination Drawings: Reflected ceiling plans, drawn to scale and coordinated with each other, using input from installers of the items involved.

B. Setting Drawings: For embedded items and cutouts required in other work, including support-beam, mounting-hole template.

C. Sample warranty.

1.05 CLOSEOUT SUBMITTALS

A. Operation and maintenance data.

1.06 QUALITY ASSURANCE

A. Installer Qualifications: An entity that employs installers and supervisors who are trained and approved by manufacturer.

1.07 WARRANTY

A. Special Warranty: Manufacturer agrees to repair or replace components of operable panel partitions that fail in materials or workmanship within specified warranty period.

1. Warranty Period: Two years from date of Substantial Completion.

PART 2 - PRODUCTS

2.01 PERFORMANCE REQUIREMENTS

A. Acoustical Performance: Provide operable panel partitions tested by a qualified testing agency for the following acoustical properties according to test methods indicated:

1. Sound-Transmission Requirements: Operable panel partition assembly tested for laboratory sound-transmission loss performance according to ASTM E 90, determined by ASTM E 413, and rated for not less than the STC indicated.

B. Fire-Test-Response Characteristics: Provide panels with finishes complying with one of the following as determined by testing identical products by UL or another testing and inspecting agency acceptable to authorities having jurisdiction:

1. Surface-Burning Characteristics: Comply with ASTM E 84 or UL 723; testing by a qualified testing agency.

a. Flame-Spread Index: 25 or less.
b. Smoke-Developed Index: 450 or less.

2. Fire Growth Contribution: Complying with acceptance criteria of local code and authorities having jurisdiction when tested according to NFPA 265 Method B Protocol.

C. Electrical Components, Devices, and Accessories: Listed and labeled as defined in NFPA 70, by a qualified testing agency, and marked for intended location and application.

2.02 OPERABLE ACOUSTICAL PANELS

A. Operable Acoustical Panels: Partition system, including panels, seals, finish facing, suspension system, operators, and accessories.

1. Basis-of-Design: Design is based Panelfold Inc., “Moduflex 620.” Subject to compliance with requirements, manufacturers offering products that may incorporated into the work include:

a. Hufcor, Inc.
b. Moderco Inc.
c. Modernfold, Inc.

B. Panel Operation: Electrically operated, continuously hinged.

C. Panel Construction: As required to support panel from suspension components and with reinforcement for hardware attachment. Fabricate panels with tight hairline joints and concealed fasteners. Fabricate panels so finished in-place partition is rigid; level; plumb; aligned, with tight joints and uniform appearance; and free of bow, warp, twist, deformation, and surface and finish irregularities.

D. Dimensions: Fabricate operable acoustical panel partitions to form an assembled system of dimensions indicated and verified by field measurements.

E. STC: Not less than 52.

F. Panel Materials:

1. Steel Frame: Steel sheet, manufacturer's standard thickness.
2. Steel Face/Liner Sheets: Tension-leveled steel sheet, manufacturer's standard thickness.

G. Panel Closure: Manufacturer's standard.

H. Hardware: Manufacturer's standard as required to operate operable panel partition and accessories; with decorative, protective finish.

2.03 SEALS

A. General: Provide seals that produce operable panel partitions complying with performance requirements and the following:

1. Seals made from materials and in profiles that minimize sound leakage.
2. Seals fitting tight at contact surfaces and sealing continuously between adjacent panels and between operable panel partition perimeter and adjacent surfaces, when operable panel partition is extended and closed.

B. Horizontal Top Seals: Continuous-contact, resilient seal exerting uniform constant pressure on track.

C. Horizontal Bottom Seals: Manufacturer's standard continuous-contact seal exerting uniform constant pressure on floor.

2.04 PANEL FINISH FACINGS

A. General: Provide finish facings for panels that comply with indicated fire-test-response characteristics and that are factory applied to operable panel partitions with appropriate backing, using mildew-resistant nonstaining adhesive as recommended by facing manufacturer's written instructions.

1. Color/Pattern: As selected by Architect from manufacturer's full range.

B. Vinyl-Coated Fabric Wall Covering: Manufacturer's standard, mildew-resistant, washable, vinyl-coated fabric wall covering; complying with CFFA-W-101-D for type indicated; Class A.

C. Trimless Edges: Fabricate exposed panel edges so finish facing wraps uninterrupted around panel, covering edge and resulting in an installed partition with facing visible on vertical panel edges, without trim, for minimal sightlines at panel-to-panel joints.

2.05 SUSPENSION SYSTEMS

A. Tracks: Steel or aluminum with adjustable steel hanger rods for overhead support, designed for operation, size, and weight of operable panel partition indicated. Size track to support partition operation and storage without damage to suspension system, operable panel partitions, or adjacent construction. Limit track deflection to no more than 0.10 inch between bracket supports. Provide a continuous system of track sections and accessories to accommodate configuration and layout indicated for partition operation and storage.

B. Carriers: Trolley system as required for configuration type, size, and weight of partition and for easy operation; with ball-bearing wheels.

C. Track Intersections, Switches, and Accessories: As required for operation, storage, track configuration, and layout indicated for operable panel partitions, and compatible with partition assembly specified. Fabricate track intersections and switches from steel or aluminum.

D. Horizontal Bottom Seals: Manufacturer's standard continuous-contact seal exerting uniform constant pressure on floor.

2.06 ELECTRIC OPERATORS

A. Factory-assembled electric operation system of size and capacity recommended and provided by operable panel partition manufacturer for partition specified; with electric motor and factory-prewired motor controls, speed reducer, chain drive, control stations, control devices, and accessories required for operation. Include wiring from control stations to motor. Coordinate operator wiring requirements and electrical characteristics with building electrical system.

B. Comply with NFPA 70.

C. Control Equipment: Comply with NEMA ICS 1, NEMA ICS 2, and NEMA ICS 6.

D. Motor Electrical Characteristics:

1. Horsepower: Manufacturer's standard.
2. Volts: 208.
3. Phase: Single phase.
4. Hertz: 60.

E. Control Stations: Two single-key-operated, constant-pressure control stations located remotely from each other on opposite sides and opposite ends of partition run. Wire in series to require simultaneous activation of both key stations to operate partition. Each three-position control station labeled “Open,” “Close,” and “Stop.” Furnish two keys per station.

F. Obstruction-Detection Devices: Equip each motorized operable panel partition with indicated automatic safety sensor that causes operator to immediately shut off motor.

1. Sensor Edge: Contact-pressure-sensitive safety edge along partition's leading edge.

G. Limit Switches: Adjustable switches, interlocked with motor controls and set to automatically stop operable panel partition at fully extended and fully stacked positions.

H. Emergency Release Mechanism: Quick disconnect-release of electric-motor drive system, permitting manual operation in event of operating failure.

I. Electric Interlock: Equip each motorized operable panel partition with electric interlocks at locations indicated, to prevent operation of operable panel partition under the following conditions:

1. On storage pocket door, to prevent operation if door is not in fully open position.
2. On partitions at location of convergence by another partition, to prevent operation if merging partitions are in place.

2.07 ACCESSORIES

A. Pass Doors: Swinging door built into and matching panel materials, construction, acoustical qualities, finish and thickness, complete with frames and operating hardware. Hinges finished to match other exposed hardware.

1. Accessibility Standard: Fabricate doors to comply with applicable provisions in the “Texas Accessibility Standards” (TAS).
2. Single Pass Door: 36 by 84 inches.
3. Pass-Door Hardware: Equip pass door with the following:

    a. Door Seals: Sweep floor seals.
    b. Concealed door closer.
    c. Exit Sign: Recessed, self-illuminated.
    d. Latchset: Passage set.

B. Storage Pocket Door: Full height at end of partition runs to conceal stacked partition; of same materials, finish, construction, thickness, and acoustical qualities as panels; complete with operating hardware and acoustical seals at soffit, floor, and jambs. Hinges in finish to match other exposed hardware.

1. Manufacturer's standard method to secure storage pocket door in closed position.
2. Rim Lock: Deadlock to receive cylinder, to secure storage pocket door in closed position. See Division 08 Section “Door Hardware” for lock cylinder and keying requirements.

PART 3 - EXECUTION

3.01 EXAMINATION

A. Examine flooring, floor levelness, structural support, and opening, with Installer present, for compliance with requirements for installation tolerances, locations of connections to building electrical system, and other conditions affecting performance of operable panel partitions.

B. Proceed with installation only after unsatisfactory conditions have been corrected.

3.02 INSTALLATION

A. Install operable panel partitions and accessories after other finishing operations, including painting, have been completed in area of partition installation.

B. Install panels in numbered sequence indicated on Shop Drawings.

C. Broken, cracked, chipped, deformed, or unmatched panels are not acceptable.

D. Broken, cracked, deformed, or unmatched gasketing or gasketing with gaps at butted ends is not acceptable.

E. Light-Leakage Test: Illuminate one side of partition installation and observe vertical joints and top and bottom seals for voids. Adjust partitions for alignment and full closure of vertical joints and full closure along top and bottom seals.

3.03 ADJUSTING

A. Adjust operable panel partitions, hardware, and other moving parts to function smoothly, and lubricate as recommended by manufacturer.

B. Adjust pass doors and storage pocket doors to operate smoothly and easily, without binding or warping.

C. Verify that safety devices are properly functioning.

3.04 MAINTENANCE SERVICE

A. Maintenance Service: Beginning at Substantial Completion, maintenance service shall include 12 months' full maintenance by manufacturer's authorized service representative. Include quarterly preventive maintenance, repair or replacement of worn or defective components, lubrication, cleaning, and adjusting as required for proper operable-partition operation. Parts and supplies shall be manufacturer's authorized replacement parts and supplies.

3.05 DEMONSTRATION

A. Engage a factory-authorized service representative to train Owner's maintenance personnel to adjust, operate, and maintain operable panel partitions.

END OF SECTION

SECTION 10 28 00
TOILET, BATH, AND LAUNDRY ACCESSORIES

PART 1 - GENERAL

1.01 SUMMARY

A. Section includes:

1. Public-use washroom accessories.
2. Childcare accessories.

1.02 COORDINATION

A. Coordinate accessory locations with other work to prevent interference with clearances required for access by people with disabilities, and for proper installation, adjustment, operation, cleaning, and servicing of accessories.

B. Deliver inserts and anchoring devices set into concrete or masonry as required to prevent delaying the Work.

1.03 ACTION SUBMITTALS

A. Product Data: For each type of product.

1. Include construction details, material descriptions, dimensions of individual components and profiles, and finishes.
2. Include anchoring and mounting requirements, including requirements for cutouts in other work and substrate preparation.
3. Include electrical characteristics.

B. Samples: Full size, for each exposed product and for each finish specified.

C. Product Schedule: Indicating types, quantities, sizes, and installation locations by room of each accessory required.

1. Identify locations using room designations indicated.
2. Identify accessories using designations indicated.

1.04 INFORMATIONAL SUBMITTALS

A. Sample Warranty: For manufacturer's special warranty.

1.05 CLOSEOUT SUBMITTALS

A. Maintenance Data: For accessories to include in maintenance manuals.

1.06 WARRANTY

A. Manufacturer's Special Warranty:

1. Mirrors: Manufacturer agrees to repair or replace mirrors that fail in materials or workmanship within specified warranty period.

   a. Failures include, but are not limited to, visible silver spoilage defects.
   b. Warranty Period: 15 years from date of Substantial Completion.

PART 2 - PRODUCTS

2.01 PERFORMANCE REQUIREMENTS

A. Electrical Components, Devices, and Accessories: Listed and labeled as defined in NFPA 70, by a qualified testing agency, and marked for intended location and application.

B. Structural Performance: Design accessories and fasteners to comply with the following requirements:

1. Grab Bars: Installed units are able to resist 250 lbf concentrated load applied in any direction and at any point.

2.02 PUBLIC-USE WASHROOM ACCESSORIES

A. Source Limitations: Obtain public-use washroom accessories from single source from single manufacturer.

B. Basis of Design: Design is based on products indicated on Drawings. Subject to compliance with requirements, provide product indicated or comparable product approved by Architect by one of the following:

1. American Specialties, Inc.
2. Bobrick Washroom Equipment, Inc.
3. Bradley Corporation.

2.03 MATERIALS

A. Stainless Steel: ASTM A 666, Type 304, 0.031-inch minimum nominal thickness unless otherwise indicated.

B. Steel Sheet: ASTM A 1008/A 1008M, Designation CS (cold rolled, commercial steel), 0.036-inch minimum nominal thickness.

C. Galvanized-Steel Sheet: ASTM A 653/A 653M, with G60 hot-dip zinc coating.

D. Galvanized-Steel Mounting Devices: ASTM A 153/A 153M, hot-dip galvanized after fabrication.

E. Fasteners: Screws, bolts, and other devices of same material as accessory unit and tamper-and-theft resistant where exposed, and of galvanized steel where concealed.

F. Chrome Plating: ASTM B 456, Service Condition Number SC 2 (moderate service).

G. Mirrors: ASTM C 1503, Mirror Glazing Quality, clear-glass mirrors, nominal 6.0 mm thick.

2.04 FABRICATION

A. General: Fabricate units with tight seams and joints, and exposed edges rolled. Hang doors and access panels with full-length, continuous hinges. Equip units for concealed anchorage and with corrosion-resistant backing plates.

B. Keys: Provide universal keys for internal access to accessories for servicing and resupplying. Provide minimum of six keys to Owner's representative.

PART 3 - EXECUTION

3.01 INSTALLATION

A. Install accessories according to manufacturers' written instructions, using fasteners appropriate to substrate indicated and recommended by unit manufacturer. Install units level, plumb, and firmly anchored in locations and at heights indicated.

1. Remove temporary labels and protective coatings.

B. Grab Bars: Install to withstand a downward load of at least 250 lbf, when tested according to ASTM F 446.

3.02 ADJUSTING AND CLEANING

A. Adjust accessories for unencumbered, smooth operation. Replace damaged or defective items.

B. Clean and polish exposed surfaces according to manufacturer's written instructions.

END OF SECTION

SECTION 10 43 13.13
DEFIBRILLATOR AND CABINET

PART 1 - GENERAL

1.01 SUMMARY

A. Section includes:

1. Automatic external defibrilator AED.
2. Semi-recessed cabinets to receive AED furnished by the Owner.

1.02 DEFINITION

A. Automatic External Defibrillator (AED): Device used to automatically treat a patient with cardiac arrest whose heart is beating irregularly (fibrillating).

1.03 PREINSTALLATION CONFERENCE

A. Preinstallation Conference: Conduct conference at Project site.

1.04 ACTION SUBMITTALS

A. Product Data: For each type of product indicated.

B. Shop Drawings: For AED cabinets. Include plans, elevations, sections, details, and attachments to other work.

1.05 CLOSEOUT SUBMITTALS

A. Maintenance data.

1.06 COORDINATION

A. Coordinate sizes and locations of AED cabinets with wall depths.

PART 2 - PRODUCTS

2.01 MATERIALS

A. Cold-Rolled Steel Sheet: ASTM A 1008/A 1008M, Commercial Steel (CS), Type B.

B. Aluminum: Alloy and temper recommended by aluminum producer and manufacturer for type of use and finish indicated, and as follows:

1. Sheet: ASTM B 209.
2. Extruded Shapes: ASTM B 221.

C. Tempered Float Glass: ASTM C 1048, Kind FT, Condition A, Type I, Quality q3, 3 mm thick, Class 1 (clear).

2.02 AED

A. Basis of Design: Design is based on Phillip “HeartStart FRx AED 861304-CO1”. Subject to compliance with requirements, provide; named product or a comparable product approved by Architect.

B. Defibrilator Features: Semiautomatic operation, compatible with Infant/Child Reduced Energy Defibrillaiton Electrodes. Provide the following:

1. American Heart Association voice prompt.
2. Energy Delivery: 200-200-360 joules.
3. Electrodes: 2 pair, pacing/defibrillation/ECG electrodes with preconnect system.
4. ABMU mask and 1 installed protocal card.
5. Infant/Child Reduced Energy Defibrillation Electrodes.

2.03 AED CABINET

A. Basis of Design: Design is based on Phillips “PFE7023D”. Subject to compliance with requirements, provide; named product or a comparable product approved by Architect.

1. J. L. Industries, Inc., a division of Activar Construction Products Group.
2. Modern Metal Products, Division of Technico Inc.

B. Cabinet Type: Suitable for AED.

C. Cabinet Construction: Nonrated.

D. Cabinet Material: Steel sheet.

E. Semirecessed Cabinet: Cabinet box partially recessed in walls of sufficient depth to suit style of trim indicated; with one-piece combination trim and perimeter door frame overlapping surrounding wall surface with exposed trim face and wall return at outer edge (backbend). Provide where walls are of insufficient depth for recessed cabinets but are of sufficient depth to accommodate semirecessed cabinet installation.

1. Square-Edge Trim: 1-1/4- to 1-3/4-inch backbend depth.

F. Cabinet Trim Material: Stainless steel sheet.

G. Door Material: Stainless steel sheet.

H. Door Style: Center glass panel with frame.

I. Door Glazing: Tempered glass.

J. Door Hardware: Manufacturer's standard door-operating hardware of proper type for cabinet type, trim style, and door material and style indicated.

K. Accessories:

1. Identification: Lettering complying with authorities having jurisdiction for letter style, size, spacing, and location. Locate as indicated.

a. Identify AED in cabinet with the words “Automated External Defibrillator” or “Emergency Defibrillator.”

1) Location: Applied to cabinet door or glazing.
2) Application Process: Decal or factory painted.
3) Lettering Color: Red.
4) Orientation: Horizontal.

L. Finishes for Steel: Manufacturer's standard baked-enamel paint.

2.04 FABRICATION

A. AED Cabinets: Provide manufacturer's standard box (tub), with trim, frame, door, and hardware to suit cabinet type, trim style, and door style indicated. Miter and weld joints and grind smooth.

PART 3 - EXECUTION

3.01 INSTALLATION

A. Examine walls and partitions for suitable framing depth and blocking where recessed cabinets will be installed and prepare recesses as required by type and size of cabinet and trim style.

B. AED Cabinets:

1. Install AED cabinets at mounting heights indicated or, if not indicated, at heights acceptable to authorities having jurisdiction.
2. Fasten cabinets to structure, square and plumb.
3. Adjust AED cabinet doors to operate easily without binding. Verify that integral locking devices operate properly.
4. Replace AED cabinets that have been damaged or have deteriorated beyond successful repair by finish touchup or similar minor repair procedures.

END OF SECTION

SECTION 10 44 13
FIRE PROTECTION CABINETS

PART 1 - GENERAL

1.01 SUMMARY

A. Section includes fire-protection cabinets for portable fire extinguishers.

1.02 PREINSTALLATION CONFERENCE

A. Preinstallation Conference: Conduct conference at Project site.

1. Review methods and procedures related to fire-protection cabinets including, but not limited to, schedules and coordination requirements.

1.03 CLOSEOUT SUBMITTALS

A. Maintenance Data: For fire-protection cabinets to include in maintenance manuals.

1.04 COORDINATION

A. Coordinate size of fire-protection cabinets to ensure that type and capacity of fire extinguishers indicated are accommodated.

B. Coordinate sizes and locations of fire-protection cabinets with wall depths.

1.05 SEQUENCING

A. Apply vinyl lettering on field-painted fire-protection cabinets after painting is complete.

PART 2 - PRODUCTS

2.01 FIRE-PROTECTION CABINET

A. Cabinet Type: Suitable for fire extinguisher.

1. Manufacturers: Subject to compliance with requirements, available manufacturers offering products that may be incorporated into the Work include, but are not limited to the following:

a. JL Industries, Inc.; a division of the Activar Construction Products Group.
b. Larsens Manufacturing Company.
c. Potter Roemer LLC.

B. Cabinet Construction: Nonrated.

C. Cabinet Material: Cold-rolled steel sheet.

D. Semirecessed Cabinet: One-piece combination trim and perimeter door frame overlapping surrounding wall surface with exposed trim face and wall return at outer edge (backbend).

1. Square-Edge Trim: 1-1/4- to 1-1/2-inch backbend depth.

E. Door Material: Steel sheet.

F. Door Style: Solid opaque panel with frame.

G. Door Hardware: Manufacturer's standard door-operating hardware of proper type for cabinet type, trim style, and door material and style indicated.

H. Cabinet Trim Material: Same material and finish as door.

I. Accessories:

1. Door Lock: Cam lock that allows door to be opened during emergency by pulling sharply on door handle.
2. Identification: Lettering complying with authorities having jurisdiction for letter style, size, spacing, and location. Locate as indicated or if not indicated as directed by Architect.

a. Identify fire extinguisher in fire-protection cabinet with the words “FIRE EXTINGUISHER.”

1) Location: Applied to cabinet door.
2) Application Process: Pressure-sensitive vinyl letters.
3) Lettering Color: Red.
4) Orientation: Horizontal.

J. Materials:

1. Cold-Rolled Steel: ASTM A 1008/A 1008M, Commercial Steel (CS), Type B.

a. Finish:

1) Cabinet: Baked enamel or powder coat.

a) Color: White.

2) Door and Frame: Factory primed for field painting.

2.02 FABRICATION

A. Fire-Protection Cabinets: Provide manufacturer's standard box (tub) with trim, frame, door, and hardware to suit cabinet type, trim style, and door style indicated.

PART 3 - EXECUTION

3.01 EXAMINATION

A. Examine walls and partitions for suitable framing depth and blocking where cabinets will be installed.

B. Proceed with installation only after unsatisfactory conditions have been corrected.

3.02 PREPARATION

A. Prepare recesses for semi recessed fire-protection cabinets as required by type and size of cabinet and trim style.

3.03 INSTALLATION

A. General: Install fire-protection cabinets in locations and at mounting heights indicated or, if not indicated, at heights acceptable to authorities having jurisdiction.

B. Fire-Protection Cabinets: Fasten cabinets to structure, square and plumb.

1. Fasten mounting brackets to inside surface of fire-protection cabinets, square and plumb.
2. Identification: Apply decals at locations indicated.

3.04 ADJUSTING AND CLEANING

A. Remove temporary protective coverings and strippable films, if any, as fire-protection cabinets are installed unless otherwise indicated in manufacturer's written installation instructions.

B. Adjust fire-protection cabinet doors to operate easily without binding. Verify that integral locking devices operate properly.

C. On completion of fire-protection cabinet installation, clean interior and exterior surfaces as recommended by manufacturer.

D. Touch up marred finishes, or replace fire-protection cabinets that cannot be restored to factory-finished appearance. Use only materials and procedures recommended or furnished by fire-protection cabinet and mounting bracket manufacturers.

E. Replace fire-protection cabinets that have been damaged or have deteriorated beyond successful repair by finish touchup or similar minor repair procedures.

END OF SECTION

SECTION 10 44 16
FIRE EXTINGUISHERS

PART 1 - GENERAL

1.01 SUMMARY

A. Section includes portable, hand-carried fire extinguishers and mounting brackets for fire extinguishers.

1.02 PREINSTALLATION MEETINGS

A. Preinstallation Conference: Conduct conference at Project site.

1. Review methods and procedures related to fire extinguishers including, but not limited to, the following:

a. Schedules and coordination requirements.

1.03 ACTION SUBMITTALS

A. Product Data: For each type of product. Include rating and classification, material descriptions, dimensions of individual components and profiles, and finishes for fire extinguisher and mounting brackets.

B. Product Schedule: For fire extinguishers. Coordinate final fire-extinguisher schedule with fire-protection cabinet schedule to ensure proper fit and function. Use same designations indicated on Drawings.

1.04 CLOSEOUT SUBMITTALS

A. Operation and Maintenance Data: For fire extinguishers to include in maintenance manuals.

1.05 COORDINATION

A. Coordinate type and capacity of fire extinguishers with fire-protection cabinets to ensure fit and function.

1.06 WARRANTY

A. Special Warranty: Manufacturer's standard form in which manufacturer agrees to repair or replace fire extinguishers that fail in materials or workmanship within specified warranty period.

1. Warranty Period: Six years from date of Substantial Completion.

PART 2 - PRODUCTS

2.01 PERFORMANCE REQUIREMENTS

A. NFPA Compliance: Fabricate and label fire extinguishers to comply with NFPA 10, "Portable Fire Extinguishers."

B. Fire Extinguishers: Listed and labeled for type, rating, and classification by an independent testing agency acceptable to authorities having jurisdiction.

2.02 PORTABLE, HAND-CARRIED FIRE EXTINGUISHERS

A. Fire Extinguishers: Type, size, and capacity for each fire-protection cabinet and mounting bracket indicated.

1. Manufacturers: Subject to compliance with requirements, available manufacturers offering products that may be incorporated into the Work include, but are not limited to the following:

   a. Guardian Fire Equipment, Inc.
   b. Kidde; Carrier Global Corporation.
   c. Larsens Manufacturing Company.
   d. Potter Roemer LLC; a Division of Morris Group International.

2. Source Limitations: Obtain fire extinguishers, fire-protection cabinets, and accessories, from single source from single manufacturer.
3. Valves: Manufacturer's standard.
4. Handles and Levers: Manufacturer's standard.
5. Instruction Labels: Include pictorial marking system complying with NFPA 10, Appendix B, and bar coding for documenting fire-extinguisher location, inspections, maintenance, and recharging.

B. Multipurpose Dry-Chemical Type in Steel Container: UL-rated 4-A:60-B:C, 10-lb nominal capacity, with monoammonium phosphate-based dry chemical in enameled-steel container.

2.03 MOUNTING BRACKETS

A. Mounting Brackets: Manufacturer's standard galvanized steel, designed to secure fire extinguisher to wall or structure, of sizes required for types and capacities of fire extinguishers indicated, with plated or red or black baked-enamel finish.

1. Manufacturers: Subject to compliance with requirements, provide products by one of the following:

   a. Guardian Fire Equipment, Inc.

b. JL Industries, Inc.; a division of the Activar Construction Products Group.
c. Kidde Residential and Commercial Division.
d. Larsens Manufacturing Company.
e. Nystrom.
f. Potter Roemer LLC; a Division of Morris Group International.

2. Source Limitations: Obtain mounting brackets and fire extinguishers from single source from single manufacturer.

B. Identification: Lettering complying with authorities having jurisdiction for letter style, size, spacing, and location. Locate as indicated by Architect.

1. Identify bracket-mounted fire extinguishers with the words "FIRE EXTINGUISHER" in red letter decals applied to mounting surface.

a. Orientation: Vertical.

PART 3 - EXECUTION

3.01 EXAMINATION

A. Examine fire extinguishers for proper charging and tagging.

1. Remove and replace damaged, defective, or undercharged fire extinguishers.

B. Proceed with installation only after unsatisfactory conditions have been corrected.

3.02 INSTALLATION

A. General: Install fire extinguishers and mounting brackets in locations indicated and in compliance with requirements of authorities having jurisdiction.

1. Mounting Brackets: Top of fire extinguisher to be at 42 inches above finished floor.

B. Mounting Brackets: Fasten mounting brackets to surfaces, square and plumb, at locations indicated.

END OF SECTION

SECTION 10 75 16
GROUND-SET FLAGPOLES

PART 1 - GENERAL

1.01 SUMMARY

A. Section includes ground-set flagpoles made from aluminum.

1.02 ACTION SUBMITTALS

A. Product Data: For each type of product. Include construction details, material descriptions, dimensions of individual components and profiles, operating characteristics, fittings, accessories, and finishes for flagpoles.

B. Shop Drawings: For flagpoles.

1. Include plans, elevations, and attachment details. Show general arrangement, jointing, fittings, accessories, grounding, anchoring, and support.
2. Include section, and details of foundation system.

C. Samples for Verification: For each type of exposed finish, in manufacturer's standard sizes.

D. Delegated-Design Submittal: For flagpoles.

1.03 CLOSEOUT SUBMITTALS

A. Operation and Maintenance Data: For flagpoles to include in operation and maintenance manuals.

1.04 DELIVERY, STORAGE, AND HANDLING

A. Spiral wrap flagpoles with heavy paper and enclose in a hard fiber tube or other protective container.

PART 2 - PRODUCTS

2.01 MANUFACTURERS

A. Source Limitations: Obtain flagpoles as complete units, including fittings, accessories, bases, and anchorage devices, from single source from single manufacturer.

2.02 PERFORMANCE REQUIREMENTS

A. Delegated Design: Engage a qualified professional engineer, as defined in Division 01 Section "Quality Requirements," to design flagpole assemblies.

B. Structural Performance: Flagpole assemblies, including anchorages and supports, shall withstand design loads indicated within limits and under conditions indicated.

1. Wind Loads: Determine according to NAAMM FP 1001. Basic wind speed for Project location is 197 mph.
2. Base flagpole design on polyester flags of maximum standard size suitable for use with flagpole or flag size indicated, whichever is more stringent.

2.03 ALUMINUM FLAGPOLES

A. Aluminum Flagpoles: Cone-tapered flagpoles fabricated from seamless extruded tubing complying with ASTM B 241/B 241M, Alloy 6063, with a minimum wall thickness of 3/16 inch.

1. Basis-of-Design: Design is based Kronberg's Flags & Flagpoles, "30 feet x 6 inches x .188 inch". Subject to compliance with requirements, available manufacturers offering products that may be incorporated into the Work include, but are not limited to the following:

a. American Flagpole.
b. Concord Industries, Inc.
c. Pole-Tech Company Inc.
d. U.S. Flag & Flagpole Supply, LP.

B. Exposed Height: 30 feet unless otherwise indicated on Drawings.

C. Construct flagpoles in one piece tapered aluminum. If more than one piece is necessary, comply with the following:

1. Fabricate shop and field joints without using fasteners, screw collars, or lead calking.
2. Provide flush hairline joints using self-aligning, snug-fitting, internal sleeves.

D. Metal Foundation Tube: Manufacturer's standard corrugated-steel foundation tube, wall thickness to accommodate pole, with 3/16-inch steel bottom plate and support plate; 3/4-inch-diameter, steel ground spike; and steel centering wedges welded together. Galvanize foundation tube after assembly. Furnish loose hardwood wedges at top of foundation tube for plumbing pole.

1. Flashing Collar: Same material and finish as flagpole.

E. Sleeve for Aluminum Flagpole: Fiberglass or PVC pipe foundation sleeve, made to fit flagpole, for casting into concrete foundation.

1. Flashing Collar: Same material and finish as flagpole.

F. Cast-Metal Shoe Base: Made from aluminum with same finish and color as flagpoles for anchor-bolt mounting; furnish with anchor bolts.

1. Furnish ground spike.

2.04 FITTINGS

A. Finial Ball: Flush-seam ball, sized as indicated or, if not indicated, to match flagpole-butt diameter.

1. 0.063-inch spun aluminum, in color selected by Architect.

B. Internal Halyard, Cam Cleat System: 5/16-inch-diameter, braided polypropylene halyard; cam cleat; and concealed revolving truck assembly with plastic-coated counterweight and sling. Furnish flush access door secured with cylinder lock. Finish truck assembly to match flagpole.

1. Halyard Flag Snaps: Stainless-steel swivel snap hooks with neoprene or vinyl covers. Furnish two per halyard.

2.05 MISCELLANEOUS MATERIALS

A. Nonshrink, Nonmetallic Grout: Factory-packaged, nonstaining, noncorrosive, nongaseous grout complying with ASTM C 1107/C 1107M.

B. Drainage Material: Crushed stone, or crushed or uncrushed gravel; coarse aggregate.

C. Sand: ASTM C 33/C 33M, fine aggregate.

D. Elastomeric Joint Sealant: Single-component neutral-curing silicone joint sealant complying with requirements in Division 07 Section “Joint Sealants.”

E. Bituminous Paint: Cold-applied asphalt emulsion complying with ASTM D 1187/D 1187M.

2.06 ALUMINUM FINISHES

A. Anodic Finish: Color as selected by Architect.

PART 3 - EXECUTION

3.01 PREPARATION

A. Prepare uncoated metal flagpoles that are set in foundation tubes by painting below-grade portions with a heavy coat of bituminous paint.

B. Foundation Excavation: Excavate to neat clean lines in undisturbed soil. Remove loose soil and foreign matter from excavation and moisten earth before placing concrete. Place and compact drainage material at excavation bottom.

C. Provide forms where required due to unstable soil conditions and for perimeter of flagpole base at grade. Secure and brace forms to prevent displacement during concreting.

D. Foundation Tube: Place foundation tube, center, and brace to prevent displacement during concreting. Place concrete. Plumb and level foundation tube and allow concrete to cure.

E. Sleeves: Locate and secure sleeves in forms by bracing to reinforcement and forms.

F. Anchor Bolts: Locate and secure anchor bolts in forms with templates and by tying to reinforcement.

G. Place concrete, as specified in Division 03 Section “Cast-in-Place Concrete.” Compact concrete in place by using vibrators. Moist-cure exposed concrete for no fewer than seven days or use nonstaining curing compound.

H. Trowel exposed concrete surfaces to a smooth, dense finish, free of trowel marks, and uniform in texture and appearance. Provide positive slope for water runoff to perimeter of concrete base.

3.02 FLAGPOLE INSTALLATION

A. General: Install flagpoles where indicated and according to approved Shop Drawings and manufacturer's written instructions.

B. Foundation Tube: Place flagpole in tube, seated on bottom plate between steel centering wedges, and install hardwood wedges to secure flagpole in place. Place and compact sand in foundation tube and remove hardwood wedges. Seal top of foundation tube with a 2-inch layer of elastomeric joint sealant and cover with flashing collar.

C. Baseplate: Cast anchor bolts in concrete foundation. Install baseplate on washers placed over leveling nuts on anchor bolts and adjust until flagpole is plumb. After flagpole is plumb, tighten retaining nuts and fill space under baseplate solidly with nonshrink, nonmetallic grout. Finish exposed grout surfaces smooth and slope 45 degrees away from edges of baseplate.

END OF SECTION

SECTION 11 13 13
LOADING DOCK BUMPERS

PART 1 - GENERAL

1.01 SUMMARY

A. Section includes loading dock bumpers.

1.02 ACTION SUBMITTALS

A. Product Data: For each type of loading dock bumper.

B. Shop Drawings: For dock bumpers. Include plans, elevations, sections, details, and attachments to other work.

PART 2 - PRODUCTS

2.01 DOCK BUMPERS

A. General: Surface-mounted bumpers; of type, size, and construction indicated; designed to absorb kinetic energy and minimize damage to loading dock structure.

1. Basis-of-Design: Design is based Uline, "Horizontal Bumper Model H-1505." Subject to compliance with requirements, available manufacturers offering products that may be incorporated into the Work include, but are not limited to the following:

a. American Floor Products Company, Inc.
b. Beacon Industries, Inc.
c. Kelley; An Entrematic brand.
d. Pioneer Dock Equipment.
e. Rite-Hite Corporation.
f. Serco; An Entrematic brand.

B. Laminated-Tread Dock Bumper: Fabricated from multiple, uniformly thick plies cut from fabric-reinforced rubber tires. Laminate plies under pressure on not less than two 3/4-inch-diameter, steel supporting rods that are welded at one end to 1/4-inch-thick, structural-steel end angle and secured with a nut and angle at the other end. Fabricate angles with predrilled anchor holes and sized to provide not less than 1 inch of tread plies extending beyond the face of closure angles.

1. Thickness: As indicated on Drawings.
2. Horizontal Style: Length as indicated on Drawings.
3. Vertical Style: As indicated on Drawings.

C. Anchorage Devices: Galvanized-steel anchor bolts, nuts, washers, bolts, sleeves, cast-in-place plates, and other anchorage devices as required to fasten bumpers securely in place and to suit installation type indicated. Hot-dip galvanized according to ASTM A 153/A 153M or ASTM F 2329.

D. Materials: ASTM 36/A 36M for steel plates, shapes, and bars. Hot-dip galvanize according to ASTM A 123/A 123M.

PART 3 - EXECUTION

3.01 EXAMINATION

A. Examine areas and conditions, with Installer present, for compliance with requirements for installation tolerances and other conditions affecting performance of the Work.

B. Proceed with installation only after unsatisfactory conditions have been corrected.

3.02 INSTALLATION

A. Dock Bumpers: Attach dock bumpers to face of loading dock in a manner that complies with requirements indicated for spacing, arrangement, and position relative to top of platform and anchorage.

1. Welded Attachment: Plug-weld anchor holes in contact with steel inserts and fillet weld at other locations.
2. Bolted Attachment: Attach dock bumpers to preset anchor bolts embedded in concrete or to cast-in-place inserts or threaded studs welded to embedded-steel plates or angles. If preset anchor bolts, cast-in-place inserts, or threaded studs welded to embedded-steel plates or angles are not provided, attach dock bumpers by drilling and anchoring with expansion anchors and bolts.
3. Screw Attachment: Attach dock bumpers to wood construction with lag bolts as indicated.

3.03 ADJUSTING

A. After completing installation of exposed, factory-finished dock bumpers, inspect exposed finishes and repair damaged finishes.

END OF SECTION

SECTION 11 13 23
PORTABLE DOCK EQUIPMENT

PART 1 - GENERAL

1.01 SUMMARY

A. Section includes portable loading dock lifts (scissors lifts).

1.02 DEFINITIONS

1.03 PREINSTALLATION MEETINGS

A. Preinstallation Conference: Conduct conference at Project site.

1.04 ACTION SUBMITTALS

A. Product Data: For each type of product.

1. Include construction details, material descriptions, dimensions of individual components and profiles, and finishes.
2. Include rated capacities, operating characteristics, electrical characteristics, and furnished specialties and accessories.

B. Shop Drawings: For portable dock equipment.

1. Include plans, elevations, sections, and attachment details.
2. Include details of equipment assemblies. Indicate dimensions, weights, loads, required clearances, method of field assembly, components, and location of each field connection.
3. Include diagrams for power, signal, and control wiring.

1.05 INFORMATIONAL SUBMITTALS

A. Qualification Data: For Installer.

1.06 CLOSEOUT SUBMITTALS

A. Operation and Maintenance Data: For portable dock equipment, to include in operation and maintenance manuals.

1.07 QUALITY ASSURANCE

A. Installer Qualifications: An authorized representative who is trained and approved by manufacturer.

PART 2 - PRODUCTS

2.01 PORTABLE LOADING DOCK LIFTS (SCISSOR LIFTS)

A. General: Portable, scissors-type, single-leg, hydraulic dock lift of capacity, size, and construction indicated; complete with controls, safety devices, and accessories required.

1. Basis-of-Design Product: Design is based on Kelley; An Entrematic Brand KDL68-8SM Dock Lift. Subject to compliance with requirements, provide named product or comparable product approved by Architect by one of the following:

a. Advance Lifts, Inc.
b. Autoquip Corporation.
c. Beacon Industries, Inc.
d. Blue Giant Equipment Corporation.
e. Kelley; An Entrematic brand.
f. Pentalift Equipment Corporation.
g. Presto Lifts ECOA.
h. Vestil Manufacturing Company.

B. Electrical Components, Devices, and Accessories: Listed and labeled as defined in NFPA 70, by a qualified testing agency, and marked for intended location and application.

C. Standard: MH 29.1.

D. Rated Capacity: Lifting capacity of not less than 8000 lb and with axle loads of 4000 lb at ends and 4000 lb at sides.

E. Platform: Nonskid, safety-tread heavy hot-dip galvanized- steel deck plate.

1. Platform Size: 72 inches wideby 96 inches long.
2. Platform Guarding: Bevel toe guards to comply with requirements in MH 29.1.
3. Removable Guard Rails: Provide hot-dip galvanized-steel guard rails on two sides of platform with a single, removable chain across each end. Provide guard rails not less than 39 inches high with midrail and 4-inch-high, kick plate at bottom.

F. Bridge: Nonskid, safety-tread hot-dip galvanized-steel plate.

1. Hinged Bridge: Hinged, throw-over bridge bolted to full-length, heavy-duty, piano-type hinge welded to toe guard at end of platform. Provide bridge complete with heavy-duty lifting chains. Chamfer edge of bridge to minimize obstructing wheels of material-handling vehicles.

G. Function: Dock lifts shall compensate for differences in height between truck bed and loading platform.
1. Travel Speed: Nominal raising speed of 8 fpm.
2. Hinged Throw-over Bridge Operation: Manual.

H. Hydraulic Operating System: Self-contained, electric, hydraulic power unit for raising and lowering lift; of size, type, and operation needed for capacity of lift indicated; controlled from a remotely located push-button station.

1. Power Unit: Consisting of continuous-duty motor, high-pressure gear pump, valve manifold, oil-line filters, and oil reservoir.

   a. Equip manifold with relief valve, check valve, pressure-compensated flow-control valve, and solenoid valve and with provisions for lowering lift manually if power fails.
   b. Equip reservoir, valve manifold, and pressure line with oil-line filters.

2. Cylinders: Equip lift with not less than two heavy-duty, high-pressure, hydraulic, ram-type cylinders. Rams shall be manufacturer's standard, either direct-displacement plunger or rod-and-piston type with positive internal stops. Cylinder rods shall be chrome plated and polished.

   a. Rate of Descent Protection: Pressure-compensated flow control or hydraulic velocity fuse to limit down speed for each cylinder.

3. Remote-Control Station: Multibutton control station of the constant-pressure type with UP and DOWN push buttons. Controller shall consist of magnetic motor starter with three-pole adjustable overloads and 24-V control transformer with 4-A, fused secondary prewired to terminal strips and enclosed in NEMA ICS 6, Type 12 box.

   a. Upper-Travel-Limit Switch: Equip unit with manufacturer's standard, adjustable, upper-travel-limit switch.

I. Construction: Fabricate lift from structural-steel shapes rigidly welded and reinforced for maximum strength, safety, and stability. Design assembly to withstand deformation during both operating and stored phases of service. Provide mounting brackets and removable lifting eyes for ease of installation.

1. Scissors Mechanism: Fabricate leg members from heavy, signle hot-dip galvanized steel-formed tube or plate members to provide maximum strength and rigidity.
2. Scissors Configuration: Two leg.
3. Bearings: Pivot points with permanently lubricated antifriction bushings or sealed ball-bearings for minimum maintenance.
4. Maintenance Leg: Removable, safety maintenance leg or hinged, safety maintenance bars.

J. Materials:

1. Steel Plates, Shapes, and Bars: ASTM 36/A 36M.
2. Rolled-Steel Floor Plate: ASTM A 786/A 786M, rolled from steel plate complying with ASTM A 572/A 572M, Grade 55.

3. Steel Tubing: ASTM A 500/A 500M, cold formed.

2.02 FINISH REQUIREMENTS

A. Baked-on Factory Finish: Provide unless otherwise indicated. Clean, pretreat, and apply manufacturer's standard two-coat, baked-on finish consisting of prime coat and thermosetting topcoat in manufacturer's standard color.

1. Toe Guards: Paint to comply with ANSI Z535.1.

B. Hot-Dip Galvanizing: Comply with the following:

1. ASTM A 123/A 123M for iron and steel portable dock equipment.
2. ASTM A 153/A 153M or ASTM F 2329/F 2329M for iron and steel hardware for portable dock equipment.

PART 3 - EXECUTION

3.01 EXAMINATION

A. Examine areas and conditions, with Installer present, for compliance with requirements for installation tolerances and other conditions affecting performance of the Work.

B. Examine roughing-in for electrical systems for portable dock equipment to verify actual locations of connections before equipment installation.

C. Proceed with installation only after unsatisfactory conditions have been corrected.

3.02 INSTALLATION, GENERAL

A. Install portable dock equipment as required for a complete installation.

3.03 ADJUSTING

A. Adjust portable dock equipment to function smoothly and safely, and lubricate as recommended by manufacturer.

B. Test lifts for vertical travel and adjust to maintain operating range indicated.

C. After completing installation of exposed, factory-finished portable dock equipment, inspect exposed finishes and repair damaged finishes.

3.04 MAINTENANCE SERVICE

A. Beginning at Substantial Completion, maintenance service shall include 12 months' full maintenance by skilled employees of portable dock equipment Installer. Include annual preventive maintenance, repair or replacement of worn or defective components, lubrication, cleaning, and adjusting as required for proper portable dock equipment operation. Parts and supplies shall be manufacturer's authorized replacement parts and supplies.

3.05 DEMONSTRATION

A. Train Owner's maintenance personnel to adjust, operate, and maintain portable dock equipment.

END OF SECTION

SECTION 11 30 13
RESIDENTIAL APPLIANCES

PART 1 - GENERAL

1.01 SUMMARY

A. Section includes:

1. Cooking appliances.
2. Kitchen exhaust ventilation.
3. Refrigeration appliances.
4. Cleaning appliances.

1.02 PREINSTALLATION MEETINGS

A. Preinstallation Conference: Conduct conference at Project site.

1.03 ACTION SUBMITTALS

A. Product Data: For each type of product.

1.04 INFORMATIONAL SUBMITTALS

A. Field quality-control reports.

B. Sample warranties.

1.05 CLOSEOUT SUBMITTALS

A. Operation and maintenance data.

1.06 WARRANTY

A. Special Warranties: Manufacturer agrees to repair or replace residential appliances or components that fail in materials or workmanship within specified warranty period.

1. Warranty Period: Five years from date of Substantial Completion.

PART 2 - PRODUCTS

2.01 PERFORMANCE REQUIREMENTS

A. Electrical Appliances: Listed and labeled as defined in NFPA 70, by a qualified testing agency, and marked for intended location and application.

B. Gas-Fueled Appliances: Certified by a qualified testing agency for each type of gas-fueled appliance according to ANSI Z21 Series standards.

C. Accessibility: Where residential appliances are indicated to comply with accessibility requirements, comply with applicable provisions in the TDLR “2012 Texas Accessibility Standards” (TAS).

2.02 MANUFACTURERS AND PRODUCTS

A. Source Limitations: Obtain residential appliances from single source and each type of residential appliance from single manufacturer.

B. Basis of Design: Design is based on product scheduled on Drawings. Subject to compliance with requirements, provide named product or comparable product from one of the following:

1. Amana; a division of Whirlpool Corporation.
2. BSH Home Appliances Corporation (Bosch).
3. General Electric Company (GE Appliances).
4. Jenn-Air; a division of Whirlpool Corporation.
5. KitchenAid; a division of Whirlpool Corporation.
6. LG Electronics.
7. Maytag; a division of Whirlpool Corporation.
8. Whirlpool.

PART 3 - EXECUTION

3.01 INSTALLATION

A. Built-in Equipment: Securely anchor units to supporting cabinets or countertops with concealed fasteners. Verify that clearances are adequate for proper functioning and that rough openings are completely concealed.

B. Freestanding Equipment: Place units in final locations after finishes have been completed in each area. Verify that clearances are adequate to properly operate equipment.

C. Range Anti-Tip Device: Install at each range according to manufacturer's written instructions.

3.02 FIELD QUALITY CONTROL

A. Perform the following tests and inspections with the assistance of a factory-authorized service representative:

1. Perform visual, mechanical, and electrical inspection and testing for each appliance according to manufacturers' written recommendations. Certify compliance with each manufacturer's appliance-performance parameters.
2. Leak Test: After installation, test for leaks. Repair leaks and retest until no leaks exist.
3. Operational Test: After installation, start units to confirm proper operation.
4. Test and adjust controls and safeties. Replace damaged and malfunctioning controls and components.

B. An appliance will be considered defective if it does not pass tests and inspections.

C. Prepare test and inspection reports.

END OF SECTION

SECTION 12 24 13
ROLLER WINDOW SHADES

PART 1 - GENERAL

1.01 SUMMARY

A. Section includes:

1. Manually operated single roller shades at all windows except lobby.

1.02 PREINSTALLATION MEETINGS

A. Preinstallation Conference: Conduct conference at Project site.

1.03 ACTION SUBMITTALS

A. Product Data: For each type of product.

1. Include styles, material descriptions, construction details, dimensions of individual components and profiles, features, finishes, and operating instructions for roller shades.

B. Shop Drawings: Show fabrication and installation details for roller shades, including shadeband materials, their orientation to rollers, and their seam and batten locations.

C. Samples: For each exposed product and for each color and texture specified.

D. Roller-Shade Schedule: Use same designations indicated on Drawings.

1.04 CLOSEOUT SUBMITTALS

A. Operation and Maintenance Data: For roller shades to include in maintenance manuals.

1.05 QUALITY ASSURANCE

A. Installer Qualifications: Fabricator of products.

B. Mockups: Build mockups to verify selections made under Sample submittals, to demonstrate aesthetic effects, and to set quality standards for fabrication and installation.

1. Approval of mockups does not constitute approval of deviations from the Contract Documents contained in mockups unless Architect specifically approves such deviations in writing.
2. Subject to compliance with requirements, approved mockups may become part of the completed Work if undisturbed at time of Substantial Completion.

1.06 DELIVERY, STORAGE, AND HANDLING

A. Deliver roller shades in factory packages, marked with manufacturer, product name, and location of installation using same designations indicated on Drawings.

1.07 FIELD CONDITIONS

A. Environmental Limitations: Do not install roller shades until construction and finish work in spaces, including painting, is complete and dry and ambient temperature and humidity conditions are maintained at the levels indicated for Project when occupied for its intended use.

B. Field Measurements: Where roller shades are indicated to fit to other construction, verify dimensions of other construction by field measurements before fabrication and indicate measurements on Shop Drawings. Allow clearances for operating hardware of operable glazed units through entire operating range. Notify Architect of installation conditions that vary from Drawings. Coordinate fabrication schedule with construction progress to avoid delaying the Work.

PART 2 - PRODUCTS

2.01 MANUFACTURERS

A. Basis-of-Design: Design is based MechoShade Systems, Inc., “Thermoveil Shades 5% open area.” Subject to compliance with requirements, available manufacturers offering products that may be incorporated into the Work include, but are not limited to, the following:

1. Draper Inc.
2. Hunter Douglas Contract.

B. Source Limitations: Obtain roller shades from single source from single manufacturer.

2.02 MANUALLY OPERATED SHADES WITH SINGLE ROLLERS

A. Chain-and-Clutch Operating Mechanisms: With continuous-loop bead chain and clutch that stops shade movement when bead chain is released; permanently adjusted and lubricated.

1. Bead Chains: Nickel-plated metal.

    a. Loop Length: Full length of roller shade.
    b. Limit Stops: Provide upper and lower ball stops.
    c. Chain-Retainer Type: Chain tensioner, sill mounted.

B. Rollers: Corrosion-resistant steel or extruded-aluminum tubes of diameters and wall thicknesses required to accommodate operating mechanisms and weights and widths of shadebands indicated without deflection. Provide with permanently lubricated drive-end assemblies and idle-end assemblies designed to facilitate removal of shadebands for service.

1. Roller Drive-End Location: Right side of interior face of shade.
2. Direction of Shadeband Roll: Regular, from back (exterior face) of roller.
3. Shadeband-to-Roller Attachment: Manufacturer's standard method.

C. Mounting Hardware: Brackets or endcaps, corrosion resistant and compatible with roller assembly, operating mechanism, installation accessories, and mounting location and conditions indicated.

D. Shadebands:

1. Shadeband Material: Light-blocking fabric unless indicated otherwise.
2. Shadeband Bottom (Hem) Bar: Steel or extruded aluminum.

    a. Type: Enclosed in sealed pocket of shadeband material.
    b. Color and Finish: As selected by Architect from manufacturer's full range.

E. Installation Accessories:

1. Exposed Headbox: Rectangular, extruded-aluminum enclosure including front fascia, top and back covers, endcaps, and removable bottom closure.

    a. Height: Manufacturer's standard height required to enclose roller and shadeband assembly when shade is fully open, but not less than 3 inches.
    b. Endcap Covers: To cover exposed endcaps.

2. Side Channels: With light seals and designed to eliminate light gaps at sides of shades as shades are drawn down. Provide side channels with shadeband guides or other means of aligning shadebands with channels at tops.
3. Methods of sealing light gaps at bottoms of shades vary among manufacturers. Shadeband bottom bars fit into bottom channels or butt against bottom angles to seal light leaks.
4. Bottom (Sill) Channel or Angle: With light seals and designed to eliminate light gaps at bottoms of shades when shades are closed.
5. Installation Accessories Color and Finish: As selected from manufacturer's full range.

2.03 SHADEBAND MATERIALS

A. Shadeband Material Flame-Resistance Rating: Comply with NFPA 701. Testing by a qualified testing agency. Identify products with appropriate markings of applicable testing agency.

B. Light-Filtering Fabric: Woven fabric, stain and fade resistant.

1. Source: Roller-shade manufacturer.
2. Type: Vinyl-coated polyester.
3. Roll Width: Custom, as indicated on Drawins.
4. Thickness: 30 mils.
5. Orientation on Shadeband: Up the bolt.
6. Openness Factor: 6 percent maximum.
7. Color: As selected by Architect from manufacturer's full range.

C. Light-Blocking Fabric: Opaque fabric, stain and fade resistant.

1. Source: Roller-shade manufacturer.
2. Type: Vinyl-coated polyester.
3. Roll Width: As indicated.
4. Thickness: 14 mils.

5. Orientation on Shadeband: Up the bolt.
6. Color: As selected by Architect from manufacturer's full range.

2.04 ROLLER-SHADE FABRICATION

A. Product Safety Standard: Fabricate roller shades to comply with WCMA A 100.1, including requirements for flexible, chain-loop devices; lead content of components; and warning labels.

B. Unit Sizes: Fabricate units in sizes to fill window and other openings as follows, measured at 74 deg F:

1. Between (Inside) Jamb Installation: Width equal to jamb-to-jamb dimension of opening in which shade is installed less 1/4 inch per side or 1/2-inch total, plus or minus 1/8 inch. Length equal to head-to-sill or -floor dimension of opening in which shade is installed less 1/4 inch, plus or minus 1/8 inch.
2. Outside of Jamb Installation: Width and length as indicated, with terminations between shades of end-to-end installations at centerlines of mullion or other defined vertical separations between openings.

C. Shadeband Fabrication: Fabricate shadebands without battens or seams to extent possible.

PART 3 - EXECUTION

3.01 EXAMINATION

A. Examine substrates, areas, and conditions, with Installer present, for compliance with requirements for installation tolerances, operational clearances, locations of connections to building electrical system, and other conditions affecting performance of the Work.

B. Proceed with installation only after unsatisfactory conditions have been corrected.

3.02 ROLLER SHADE INSTALLATION

A. Install roller shades level, plumb, and aligned with adjacent units according to manufacturer's written instructions.

1. Opaque Shadebands: Located so shadeband is not closer than 2 inches to interior face of glass. Allow clearances for window operation hardware.

B. Roller Shade Locations: As indicated in window-covering schedule.

3.03 ADJUSTING

A. Adjust and balance roller shades to operate smoothly, easily, safely, and free from binding or malfunction throughout entire operational range.

3.04 CLEANING AND PROTECTION

A. Clean roller shade surfaces, after installation, according to manufacturer's written instructions.

B. Provide final protection and maintain conditions, in a manner acceptable to manufacturer and Installer, that ensure that roller shades are without damage or deterioration at time of Substantial Completion.

C. Replace damaged roller shades that cannot be repaired, in a manner approved by Architect, before time of Substantial Completion.

3.05 DEMONSTRATION

A. Engage a factory-authorized service representative to train Owner's maintenance personnel to adjust, operate, and maintain motor-operated roller shades.

END OF SECTION

SECTION 12 36 61.16
SOLID SURFACING COUNTERTOPS

PART 1 - GENERAL

1.01 SUMMARY

A. Section includes:

1. Solid surface material countertops.
2. Solid surface material backsplashes.
3. Solid surface material end splashes.

1.02 ACTION SUBMITTALS

A. Product Data: For countertop materials.

B. Shop Drawings: For countertops. Show materials, finishes, edge and backsplash profiles, methods of joining, and cutouts for plumbing fixtures.

C. Samples: For each type of material exposed to view.

PART 2 - PRODUCTS

2.01 SOLID SURFACE COUNTERTOP MATERIALS

A. Solid Surface Material: Homogeneous-filled plastic resin complying with ICPA SS-1.

1. Basis-of-Design: Design is based E. I. du Pont de Nemours and Company, "Corian." Subject to compliance with requirements, available manufacturers offering products that may be incorporated into the Work include, but are not limited to the following:

    a. Avonite Surfaces.
    b. Formica Corporation.
    c. LG Chemical, Ltd.
    d. Wilsonart LLC.

2. Type: Provide Standard type.
3. Colors and Patterns: As indicated by manufacturer's designations or if not indicted as selected by Architect from manufacturer's full range.

B. Plywood: Exterior softwood plywood complying with DOC PS 1, Grade C-C Plugged, touch sanded.

2.02 COUNTERTOP FABRICATION

A. Fabricate countertops according to solid surface material manufacturer's written instructions and to the AWI/AWMAC/WI's “Architectural Woodwork Standards.”

1. Grade: Premium.

B. Configuration: As indicated on Drawings.

C. Countertops: 3/4-inch- thick, solid surface material with front edge built up with same material.

1. Front Edge: Square, with eased edge.

D. Backsplashes: 3/ 4 inch- thick, solid surface material; straight, slightly eased.

E. Endsplash: Match backsplash.

F. Joints: Fabricate countertops without joints.

G. Cutouts and Holes:

1. Undercounter Plumbing Fixtures: Make cutouts for fixtures in shop using template or pattern furnished by fixture manufacturer. Form cutouts to smooth, even curves.

2.03 INSTALLATION MATERIALS

A. Adhesive: Product recommended by solid surface material manufacturer.

B. Sealant for Countertops: Comply with applicable requirements in Division 07 Section “Joint Sealants.”

PART 3 - EXECUTION

3.01 INSTALLATION

A. Fasten subtops to cabinets by screwing through subtops into cornerblocks of base cabinets. Shim as needed to align subtops in a level plane.

B. Secure countertops to subtops with adhesive according to solid surface material manufacturer's written instructions.

C. Bond joints with adhesive and draw tight as countertops are set. Mask areas of countertops adjacent to joints to prevent adhesive smears.

D. Install backsplashes and end splashes by adhering to wall and countertops with adhesive.

E. Install aprons to backing and countertops with adhesive.

F. Complete cutouts not finished in shop. Mask areas of countertops adjacent to cutouts to prevent damage while cutting. Make cutouts to accurately fit items to be installed, and at right angles to finished surfaces unless beveling is required for clearance. Ease edges slightly to prevent snipping.

G. Apply sealant to gaps at walls; comply with Division 07 Section “Joint Sealants.”

END OF SECTION

SECTION 14 21 23.16
MACHINE ROOM-LESS TRACTION PASSENGER ELEVATOR

PART 1 - GENERAL

1.01 SUMMARY

A. Section includes machine-room-less electric traction passenger elevators.

1.02 ACTION SUBMITTALS

A. Product Data: For each type of product.

1. Include capacities, sizes, performances, operations, safety features, finishes, and similar information.
2. Include Product Data for car enclosures, hoistway entrances, and operation, control, and signal systems.

B. Shop Drawings:

1. Include plans, elevations, sections, and large-scale details indicating service at each landing, coordination with building structure, relationships with other construction, and locations of equipment.
2. Indicate maximum dynamic and static loads imposed on building structure at points of support, and maximum and average power demands.

C. Samples: For each type of exposed finish involving color selection.

1.03 INFORMATIONAL SUBMITTALS

A. Qualification Data: For Installer.

B. Manufacturer Certificates: Signed by elevator manufacturer certifying that hoistway and pit layout and dimensions, as indicated on Drawings, and electrical service including standby power generator, as shown and specified, are adequate for elevator system being provided.

C. Sample Warranty: For special warranty.

1.04 CLOSEOUT SUBMITTALS

A. Operation and Maintenance Data: For elevators to include in emergency, operation, and maintenance manuals.

B. Inspection and Acceptance Certificates and Operating Permits: As required by authorities having jurisdiction for normal, unrestricted elevator use.

C. Continuing Maintenance Proposal: Submit a continuing maintenance proposal from Installer to Owner, in the form of a standard one-year maintenance agreement, starting on date initial maintenance service is concluded. State services, obligations, conditions, and terms for agreement period and for future renewal options.

1.05 QUALITY ASSURANCE

A. Installer Qualifications: Elevator manufacturer or an authorized representative who is trained and approved by manufacturer.

1.06 DELIVERY, STORAGE, AND HANDLING

A. Deliver, store, and handle materials, components, and equipment in manufacturer's protective packaging. Store materials, components, and equipment off of ground, under cover, and in a dry location.

1.07 COORDINATION

A. Coordinate installation of inserts, sleeves, block outs, elevator equipment with integral anchors, and other items that are embedded in concrete or masonry for elevator equipment. Furnish templates, inserts, sleeves, elevator equipment with integral anchors, and installation instructions and deliver to Project site in time for installation.

B. Coordinate locations and dimensions of work specified in other Sections that relates to electric traction elevators including pit ladders; sumps and floor drains in pits; entrance subsills; electrical service; and electrical outlets, lights, and switches in hoistways and pits.

1.08 WARRANTY

A. Manufacturer's Special Warranty: Manufacturer agrees to repair, restore, or replace elevator work that fails in materials or workmanship within specified warranty period.

1. Failures include, but are not limited to, operation or control system failure, including excessive malfunctions; performances below specified ratings; excessive wear; unusual deterioration or aging of materials or finishes; unsafe conditions; need for excessive maintenance; abnormal noise or vibration; and similar unusual, unexpected, and unsatisfactory conditions.
2. Warranty Period: one year from date of Substantial Completion.

PART 2 - PRODUCTS

2.01 MANUFACTURERS

A. Basis-of-Design: Design is based on Schlindler Elevator Company, “3300 MRL” elevators. Subject to compliance with requirements, provide; named product or a comparable product approved by Architect by one of the following:

1. KONE Inc.
2. Otis Elevator Company
3. ThyssenKrupp Elevator.

B. Source Limitations: Obtain elevators from single manufacturer.

1. Major elevator components, including driving machines, controllers, signal fixtures, door operators, car frames, cars, and entrances, shall be manufactured by single manufacturer.

2.02 PERFORMANCE REQUIREMENTS

A. Regulatory Requirements: Comply with ASME A17.1/CSA B44.

B. Accessibility Requirements: Comply with requirements for accessible elevators in the TDLR "2012 Texas Accessibility Standards" (TAS).

2.03 ELEVATORS

A. Elevator System, General: Manufacturer's standard elevator systems. Unless otherwise indicated, manufacturer's standard components shall be used, as included in standard elevator systems and as required for complete system.

B. Elevator Description:
1. Rated Load: 3500 lb.
2. Rated Speed: 100 fpm.
3. Operation System: Selective-collective automatic operation.
4. Auxiliary Operations:

   a. Standby power operation.
   b. Automatic dispatching of loaded car.
   c. Automatic operation of lights and ventilation fans.

5. Car Enclosures:

   a. Inside Width: As indicated on Drawings.
   b. Inside Depth: As indicated on Drawings.
   c. Inside Height: As indicated on Drawings.
   d. Cab Finsihes: As indicated on Drawings.
   e. Door Sills: Aluminum.

6. Hoistway Entrances:

   a. Width: As indicated on Drawings.
   b. Height: As indicated on Drawings.
   c. Type: Two-speed side sliding.
   d. Frames: Satin stainless steel, No. 4 finish.
   e. Doors: Satin stainless steel, No. 4 finish.
   f. Sills: Aluminum.

7. Hall Fixtures: Satin stainless steel, No. 4 finish.
8. Additional Requirements:

   a. Provide inspection certificate in each car, mounted under acrylic cover with frame made from satin stainless steel, No. 4 finish.
   b. Provide hooks for protective pads in all cars and two complete set(s) of full-height protective pads.

2.04 TRACTION SYSTEMS

A. Elevator Machines: Permanent magnet, variable-voltage, variable-frequency, ac-type hoisting machines and solid-state power converters.

1. Provide regenerative or nonregenerative system.
2. Provide regenerative system that complies with the IgCC.
3. Limit total harmonic distortion of regenerated power to 5 percent per IEEE 519.
4. Provide means for absorbing regenerated power when elevator system is operating on standby power.
5. Provide line filters or chokes to prevent electrical peaks or spikes from feeding back into building power system.

B. Machine Beams: Provide steel framing to support elevator hoisting machine and deflector sheaves from the building structure. Comply with Division 05 Section "Metal Fabrications" for materials and fabrication.

C. Car Frame and Platform: Bolted- or welded-steel units.

D. Guides: Roller guides or polymer-coated, nonlubricated sliding guides. Provide guides at top and bottom of car and counterweight frames.

2.05 OPERATION SYSTEMS

A. General: Provide manufacturer's standard microprocessor operation systems as required to provide type of operation indicated.

B. Auxiliary Operations:

1. Single-Car Standby Power Operation: On activation of standby power, car is returned to a designated floor and parked with doors open. Car can be manually put in service on standby power, either for return operation or for regular operation, by switches in control panel located at main lobby. Manual operation causes automatic operation to cease.
2. Automatic Dispatching of Loaded Car: When car load exceeds 80 percent of rated capacity, doors begin closing.
3. Automatic Operation of Lights and Fan: When elevator is stopped and unoccupied with doors closed, lighting, ventilation fan, and cab displays are de-energized after five minutes and are re-energized before car doors open.

2.06 DOOR REOPENING DEVICES

A. Infrared Array: Provide door reopening device with uniform array of 36 or more microprocessor-controlled, infrared light beams projecting across car entrance. Interruption of one or more light beams shall cause doors to stop and reopen.

B. Nudging Feature: After car doors are prevented from closing for predetermined adjustable time, through activating door reopening device, a loud buzzer shall sound and doors shall begin to close at reduced kinetic energy.

2.07 CAR ENCLOSURES

A. General: Provide enameled or powder-coated steel car enclosures to receive removable wall panels, with removable car roof, access doors, power door operators, and ventilation.

1. Provide standard railings complying with ASME A17.1/CSA B44 on car tops where required by ASME A17.1/CSA B44.

B. Materials and Finishes: Manufacturer's standards, but not less than the following:

1. Subfloor: Exterior, C-C Plugged grade plywood, not less than 7/8-inch nominal thickness.
2. Floor Finish: Specified in Division 09 Section “Ceramic Tiling.”
3. Plastic-Laminate Wall Panels: Plastic laminate adhesively applied to manufacturer's standard honeycomb core with plastic-laminate panel backing and manufacturer's standard protective edge trim. Panels shall have a flame-spread index of 25 or less, when tested according to ASTM E 84. Plastic-laminate color, texture, and pattern as selected by Architect from plastic-laminate manufacturer's full range.
4. Stainless-Steel Doors: Flush, hollow-metal construction; fabricated from stainless-steel sheet.
5. Sight Guards: Provide sight guards on car doors.
6. Sills: Extruded or machined metal, with grooved surface, 1/4 inch thick.
7. Metal Ceiling: Flush panels, with four low-voltage downlights in each panel. Align ceiling panel joints with joints between wall panels.

2.08 HOISTWAY ENTRANCES

A. Hoistway Entrance Assemblies: Manufacturer's standard horizontal-sliding, door-and-frame hoistway entrances complete with track systems, hardware, sills, and accessories. Frame size and profile shall accommodate hoistway wall construction.

B. Fire-Rated Hoistway Entrance Assemblies: Door and frame assemblies shall comply with NFPA 80 and be listed and labeled by a testing and inspecting agency acceptable to authorities having jurisdiction based on testing at as close-to-neutral pressure as possible according to NFPA 252 or UL 10B.

1. Fire-Protection Rating: As indicated.

C. Materials and Fabrication: Manufacturer's standards, but not less than the following:

1. Enameled or Powder-Coated Steel Frames: Formed from cold- or hot-rolled steel sheet. Provide with factory-applied enamel or powder-coat finish; colors as selected by Architect from manufacturer's full range.
2. Stainless-Steel Frames: Formed from stainless-steel sheet.
3. Star of Life Symbol: Identify emergency elevators with star of life symbol, not less than 3 inches high, on both jambs of hoistway door frames.
4. Stainless-Steel Doors: Flush, hollow-metal construction; fabricated from stainless-steel sheet.
5. Sight Guards: Provide sight guards on doors matching door edges.
6. Sills: Extruded or machined metal, with grooved surface, 1/4 inch thick.
7. Nonshrink, Nonmetallic Grout: Factory-packaged, nonstaining, noncorrosive, nongaseous grout complying with ASTM C 1107/C 1107M.

2.09 SIGNAL EQUIPMENT

A. General: Provide hall-call and car-call buttons that light when activated and remain lit until call has been fulfilled. Provide vandal-resistant buttons and lighted elements illuminated with LEDs.

B. Car-Control Stations: Provide manufacturer's standard recessed car-control stations. Mount in return panel adjacent to car door unless otherwise indicated.

1. Mark buttons and switches for required use or function. Use both tactile symbols and Braille.
2. Provide “No Smoking” sign matching car-control station, either integral with car-control station or mounted adjacent to it, with text and graphics as required by authorities having jurisdiction.

C. Emergency Communication System: Two-way voice communication system, with visible signal, which dials preprogrammed number of monitoring station and does not require handset use. System is contained in flush-mounted cabinet, with identification, instructions for use, and battery backup power supply.

D. Firefighters' Two-Way Telephone Communication Service: Provide flush-mounted cabinet in each car and required conductors in traveling cable for firefighters' two-way telephone communication service specified in other sections.

E. Car Position Indicator: Provide illuminated, digital-type car position indicator, located above car door or above car-control station. Also, provide audible signal to indicate to passengers that car is either stopping at or passing each of the floors served. Include travel direction arrows if not provided in car-control station.

F. Hall Push-Button Stations: Provide one hall push-button station at each landing.

G. Hall Lanterns: Units with illuminated arrows; but provide single arrow at terminal landings. Provide manufacturer's standard wall-mounted units, for mounting above entrance frames.

H. Hall Annunciator: With each hall lantern, provide audible signals indicating car arrival and direction of travel. Signals sound once for up and twice for down.

I. Standby Power Elevator Selector Switches: Provide switches, as required by ASME A17.1/CSA B44, where indicated. Adjacent to switches, provide illuminated signal that indicates when normal power supply has failed.

J. Fire-Command-Center Annunciator Panel: Provide panel containing illuminated position indicators for each elevator, clearly labeled with elevator designation; include illuminated signal that indicates when elevator is operational and when it is at the designated emergency return level with doors open. Provide standby power elevator selector switch(es), as required by ASME A17.1/CSA B44, adjacent to position indicators. Provide illuminated signal that indicates when normal power supply has failed.

K. Emergency Pictorial Signs: Fabricate from materials matching hall push-button stations, with text and graphics as required by authorities having jurisdiction, indicating that in case of fire, elevators are out of service and exits should be used instead. Provide one sign at each hall push-button station unless otherwise indicated.

2.10 FINISH MATERIALS

A. Cold-Rolled Steel Sheet: ASTM A 1008/A 1008M, commercial steel, Type B, exposed, matte finish.

B. Hot-Rolled Steel Sheet: ASTM A 1011/A 1011M, commercial steel, Type B, pickled.

C. Stainless-Steel Sheet: ASTM A 240/A 240M, Type 304.

D. Stainless-Steel Bars: ASTM A 276, Type 304.

E. Stainless-Steel Tubing: ASTM A 554, Grade MT 304.

F. Aluminum Extrusions: ASTM B 221, Alloy 6063.

G. Plastic Laminate: High-pressure type complying with NEMA LD 3, Type HGS or Type HGL.

PART 3 - EXECUTION

3.01 EXAMINATION

A. Examine elevator areas, with Installer present, for compliance with requirements for installation tolerances and other conditions affecting performance of the Work. Examine hoistways, hoistway openings, and pits as constructed; verify critical dimensions; and examine supporting structure and other conditions under which elevator work is to be installed.

B. Prepare written report, endorsed by Installer, listing conditions detrimental to performance of the Work.

C. Proceed with installation only after unsatisfactory conditions have been corrected.

3.02 INSTALLATION

A. Comply with manufacturer's written instructions.

B. Welded Construction: Provide welded connections for installing elevator work where bolted connections are not required for subsequent removal or for normal operation, adjustment, inspection, maintenance, and replacement of worn parts. Comply with AWS standards for workmanship and for qualifications of welding operators.

C. Sound Isolation: Mount rotating and vibrating equipment on vibration-isolating mounts to minimize vibration transmission to structure and structure-borne noise due to elevator system.

D. Lubricate operating parts of systems, including ropes, as recommended by manufacturers.

E. Alignment: Coordinate installation of hoistway entrances with installation of elevator guide rails for accurate alignment of entrances with car. Where possible, delay final adjustment of sills and doors until car is operable in shaft. Reduce clearances to minimum, safe, workable dimension at each landing.

F. Leveling Tolerance: 1/8 inch, up or down, regardless of load and travel direction.

G. Set sills flush with finished floor surface at landing. Fill space under sill solidly with nonshrink, nonmetallic grout.

H. Locate hall signal equipment for elevators as follows unless otherwise indicated:

1. Place hall lanterns either above or beside each hoistway entrance.
2. Mount hall lanterns at a minimum of 72 inches above finished floor.

3.03 FIELD QUALITY CONTROL

A. Acceptance Testing: On completion of elevator installation and before permitting elevator use (either temporary or permanent), perform acceptance tests as required and recommended by ASME A17.1/CSA B44 and by governing regulations and agencies.

3.04 PROTECTION

A. Temporary Use: Comply with the following requirements for each elevator used for construction purposes:

1. Provide car with temporary enclosure, either within finished car or in place of finished car, to protect finishes from damage.
2. Provide strippable protective film on entrance and car doors and frames.
3. Provide other protective coverings, barriers, devices, signs, and procedures as needed to protect elevator and elevator equipment.
4. Do not load elevators beyond their rated weight capacity.
5. Engage elevator Installer to provide full maintenance service. Include preventive maintenance, repair or replacement of worn or defective components, lubrication, cleanup, and adjustment as necessary for proper elevator operation at rated speed and capacity. Provide parts and supplies same as those used in the manufacture and installation of original equipment.
6. Engage elevator Installer to restore damaged work, if any, so no evidence remains of correction. Return items that cannot be refinished in the field to the shop, make required repairs and refinish entire unit, or provide new units as required.

3.05 DEMONSTRATION

A. Engage a factory-authorized service representative to train Owner's maintenance personnel to operate, adjust, and maintain elevator(s).

3.06 MAINTENANCE SERVICE

A. Initial Maintenance Service: Beginning at Substantial Completion, maintenance service shall include 60 months' full maintenance by skilled employees of elevator Installer. Include monthly preventive maintenance, repair or replacement of worn or defective components, lubrication, cleaning, and adjusting as required for proper elevator operation at rated speed and capacity. Parts and supplies shall be manufacturer's authorized replacement parts and supplies.

END OF SECTION

21 00 00

GENERAL REQUIREMENTS FOR FIRE SUPPRESSION

PART 1 - GENERAL

1.01 SECTION INCLUDES

A. Basic Fire Protection Requirements specifically applicable to Division 21 sections, in addition to Division 01 - General Requirements.

1.02 RELATED DOCUMENTS

A. Basic and supplemental requirements common to Fire Protection.

B. THE UNIFORM GENERAL CONDITIONS, SUPPLEMENTARY GENERAL CONDITIONS, and Division 01 of the specifications apply to the work specified in this section.

C. All work covered by this section of these specifications shall be accomplished in accordance with all applicable provisions of the Contract Documents and any addenda or directives which may be issued herewith, or otherwise.

1.03 GENERAL

A. The Contractor shall execute all work herein after specified or indicated on accompanying drawings. Contractor shall provide all equipment necessary and usually furnished in connection with such work and systems whether or not mentioned specifically herein or on the Drawings.

B. The Contractor shall be responsible for fitting his material and apparatus into the building and shall carefully lay out his work at the site to conform to the structural conditions, to avoid all obstructions, to conform to the details of the installation and thereby to provide an integrated satisfactory operating installation

C. The Fire Protection Drawings are necessarily diagrammatic by their nature, and are not intended to show every connection in detail or every pipe in its exact location. These details are subject to the requirements of standards referenced elsewhere in these specifications, and structural and architectural conditions. The Contractor shall carefully investigate structural and finish conditions and shall coordinate the separate trades in order to avoid interference between the various phases of work. Work shall be organized and laid out so that it will be concealed in furred chases, above suspended ceilings, etc., in finished portions of the building, unless specifically noted to be exposed or where no ceilings exist. All exposed work shall be installed parallel or perpendicular to the lines of the building unless otherwise noted. All work shall be NFPA compliant and compliant with Insurance Underwriter requirements and guidelines.

D. When the Fire Protection drawings do not give exact details as to the elevation of pipe the Contractor shall physically arrange the systems to fit in the space available at the elevations intended with proper grades for the functioning of the system involved. Piping is generally intended to be installed true and square to the building construction, The Drawings do not show all required offsets, control lines, pilot lines and other location details. Work shall be concealed in all finished areas, unless there is no ceiling.

1.04 DEFINITIONS

A. These definitions are included to clarify the direction and intention of these Specifications. The list given here is not by any means complete. For further clarification as required, contractor shall contact the designated Owner’s representative.

1. Concealed / Exposed: Concealed areas are those that cannot be seen by the building occupants. Exposed areas are all areas that are exposed to view by the building occupants, including under counters, inside cabinets and closets, plus all mechanical rooms.

2. General Requirements: The provisions of requirements of other Division 01 sections apply to entire work of contract and, where so indicated, to other elements that are included in project. Basic contract definitions are included in the General Conditions.

3. Indicated: The term "indicated" is a cross reference to graphic representations, notes or schedules on drawings, to other paragraphs or schedules in the specifications, and to similar means of recording requirements on contract documents. Where terms such as "shown,” "noted,” "scheduled,” and "specified" are used in lieu of "indicated,” it is for the purpose of helping reader locate the cross reference, and no limitation of location is intended except as specifically noted.

4. Directed, requested, etc.: Where not otherwise explained, terms such as "directed," "requested," "authorized," "selected,” "approved,” "required,” "accepted,” and "permitted" mean “directed by Architect/Engineer,” "requested by Architect/Engineer" and similar phrases. However, no such implied meaning will be interpreted to extend Architect's/Engineer's responsibility into Contractor's area of construction supervision and job safety.

5. Approve: Where used in conjunction with Architect's/Engineer's response to submittals, requests, applications, inquiries, reports and claims by Contractor, the meaning of term "approved" will be held to limitations to Architect's/Engineer's responsibilities and duties as specified in General and Supplementary Conditions. In no case will "approval" by Architect/Engineer be interpreted as a release of Contractor from responsibilities to fulfill requirements of contract documents or to extend Architect's/Engineer's responsibility into Contractor's area of construction supervision and job safety.

6. As required: Where "as required" is used in these specifications or on the drawings, it shall mean "that situations exist that are not necessarily described in detail or indicated that may cause the contractor certain complications in performing the work described or indicated. These complications entail the normal coordination activities expected of the Contractor where multiple trades are involved and new or existing construction causes deviations to otherwise simplistic approaches to the work to be performed. The term shall not be interpreted to permit an option on the part of the Contractor to achieve the end result."

7. Furnish: The term "furnish" is used to mean "supply and deliver to project site, ready for unloading, unpacking, assemble, installation, and similar operations. Where "furnish" applies to work for which the installation is not otherwise specified, "furnish" in such case shall mean "furnish and install.”

8. Install: The term "install" is used to describe operations at Project Site including the actual "unloading, unpacking, assembly, erection, placing, anchoring, applying, working to dimension, finishing, curing, protecting, cleaning, and similar operations.

9. Provide: The term "provide" means "to furnish and install, complete and ready for the intended use.

1.05 PERMITS, UTLILITY CONNECTIONS AND INSPECTIONS

A. General: Refer to Division 01 for construction phasing and time increments.

B. Fees and Costs: If, during the course of the construction, a need arises to buy utilities, the Contractor shall pay all fees attendant thereto. If city or privately owned utility piping or electrical cable needs to be extended, relocated, or terminated, the Contractor will pay all permits and construction/inspection fees associated with that particular work.

C. All work performed on this project is under the authority of the State of Texas, therefore no local construction fees or construction permits will be required except as may be required for new service taps, or new or modified connections to city controlled services. If inspections by city personnel are specifically required by this document, then the Contractor is responsible for any fees or permits in connection to those requirements.

A. Compliance: The Contractor shall comply in every respect with all requirements of National Fire Protection Association, local Fire Department regulations and utility company requirements. In no case does this relieve the Contractor of the responsibility of complying with these specifications and drawings where specified conditions are of higher quality than the requirements of the above-specified authorities. Where requirements of the specifications and drawings are more lenient than the requirements of the above authorities having jurisdiction, the Contractor shall make installations in compliance with the requirements of the above authorities with no extra compensation.

D. Fire hydrant flow test shall be witnessed by a representative of Fort Bend County W.C. & I.D. No. 2 (Phone No: 281-499-1031).

1.06 CONTRACT DRAWINGS

A. All dimensional information related to new structures shall be taken from the appropriate drawings. All dimensional information related to existing facilities shall be taken from actual measurements made by the Contractor on the site.

B. The interrelation of the specifications, the Drawings, and the Schedules are as follows: The Specifications determine the nature and setting of the several materials, the Drawings establish the quantities, dimensions and details, and the Schedules give the performance characteristics. If the Contractor requires additional clarification, he shall request it in writing, following the contractually prescribed information flow requirements.

C. Should the drawings or specifications conflict within themselves, or with each other, the better quality, or greater size or quantity of work or materials shall be performed or furnished.

1.07 ALLOWANCES

E. Cash Allowance: Refer to Division 01 of the Construction Documents for information and requirements.

1.08 SUBMITTALS

A. Refer to Division 01, UGC, and supplemental UGCs for specification requirements pertaining to timeliness of submission and review, quantity, and format. Each specification section describes the content of the submittals and any submittals which must be approved prior to submission of others.

F. Proposed Products List: Include Products specified in the following sections:

1. Section 21 05 29 – Fire Protection Supports and Sleeves

2. Section 21 05 53 – Fire Protection Piping and Equipment Identification

3. Section 21 08 00 – Fire Protection Systems Commissioning

4. Section 21 10 00 – Water Based Fire Suppression Systems

5. Submit shop drawings and product data grouped to include complete submittals of related systems, products, and accessories clearly marked and/or highlighted, with non-applicable information or data clearly noted in a single submittal.

G. Mark dimensions and values in units to match those specified.

H. Submit fabrication drawings whenever (1) equipment proposed varies in physical size and arrangement from that indicated on the Drawings, thus causing rearrangement of equipment space, (2) where tight spaces require extreme coordination between ductwork, piping, conduit, and other equipment, (3) where called for elsewhere in these specifications; and (4) where specifically requested by the Architect/Engineer. Fabrication drawings shall be made at no additional charge to the Owner or the Architect/Engineer.

1.09 SUBSTITUTION OF MATERIALS AND EQUIPMENT

I. Refer to General Conditions for substitution of materials and equipment.

J. General: Within thirty days after the date of Contract award or work order, whichever is later, and before purchasing or starting installation of materials or equipment, the Contractor shall submit for review, a complete list of suppliers, contractors and manufacturers for all materials and equipment that will be submitted for incorporation into the project. The list shall be arranged in accordance with the organization of the specifications. This initial list shall include the manufacturer's name and type or catalog number as required to identify the quality of material or equipment proposed. This list will be reviewed by the Engineer and the Owner and will be returned to the Contractor with comments as to which items are acceptable without further submittal data and which items will require detailed submittal data for further review and subsequent approval. The initial list shall be submitted as herein specified. Materials and equipment requiring detailed submittal data shall be submitted with sufficient data to indicate that all requirements of these specifications have been met and samples shall be furnished when requested. All manufacturers' data used as part of the submittal shall have all inapplicable features crossed out or deleted in a manner that will clearly indicate exactly what is to be furnished.

K. It is not the intent of the drawings and/or specifications to limit products to any particular manufacturer nor to discriminate against an "APPROVED EQUAL" product as produced by another manufacturer. Some proprietary products are mentioned to set a definite standard for acceptance and to serve as a reference in comparison with other products. When a manufacturer's name appears in these specifications, it is not to be construed that the manufacturer is unconditionally acceptable as a provider of equipment for this project. The successful manufacturer or supplier shall meet all of the provisions of the appropriate specification(s).

L. The specified products have been used in preparing the drawings and specifications and thus establish minimum qualities with which substitutes must at least equal to be considered acceptable. The burden of proof of equality rests with the Contractor. The decision of the Architect/Engineer is final.

M. When requested by the Architect/Engineer, the Contractor shall provide a sample of the proposed substitute item. In some cases, samples of both the specified item and the proposed item shall be provided for comparison purposes.

N. Timeliness: The burden of timeliness in the complete cycle of submittal data, shop drawings, and sample processing is on the Contractor. The Contractor shall allow a minimum of six (6) weeks' time frame for review of each submission by the office of the design discipline involved after receipt of such submissions by that design discipline. The Contractor is responsible for allowing sufficient time in the construction schedule to cover the aforementioned cycles of data processing, including time for all resubmittal cycles on unacceptable materials, equipment, etc. covered by the data submitted. Construction delays and/or lack of timeliness in the above regard are the responsibility of the Contractor and will not be considered in any request for scheduled construction time extensions and/or additional costs to the Owner.

O. All equipment installed on this project shall have local representation, local factory authorized service, and a local stock of repair parts.

P. Acceptance of materials and equipment will be based on manufacturer's published data and will be tentative subject to the submission of complete shop drawings indicating compliance with the contract documents and that adequate and acceptable clearances for entry, servicing, and maintenance will exist. Acceptance of materials and equipment under this provision shall not be construed as authorizing any deviations from the specifications, unless the attention of the Architect/Engineer has been directed in writing to the specific deviations. Data submitted shall not contain unrelated information unless all pertinent information is properly identified.

Q. Certification: The Contractor shall carefully examine all data forwarded for approval and shall sign a certificate to the effect that the data has been carefully checked and found to be correct with respect to dimensions and available space and that the equipment complies with all requirements of the specifications.

R. Physical Size of Equipment: Space is critical; therefore, equipment of larger sizes than shown, even though of specified manufacturer, will not be acceptable unless it can be demonstrated that ample space exists for proper installation, operation, and maintenance.

S. Materials and Equipment Lists: Eight (8) copies of the list of materials and equipment, the name of manufacturer, trade name, type, and catalog number shall be submitted to the Architect/Engineer. The lists shall be accompanied by eight (8) sets of pictorial and descriptive data derived from the manufacturers' catalogs, sales literature, or incorporated in the shop drawings.

T. Should a substitution be accepted, and should the substitute material prove defective, or otherwise unsatisfactory for the service intended within the guarantee period, this material or equipment shall be replaced with the material or equipment specified at no additional cost to the Owner.

1.10 MATERIALS AND WORKMANSHIP

U. All materials, unless otherwise specified, shall be new, free from all defects, suitable for the intended use, and of the best quality of their respective kinds. Materials and equipment shall be installed in accordance with the manufacturer's recommendations and the best standard practice for the type of work involved. All work shall be executed by mechanics skilled in their respective trades, and the installations shall provide a neat, precise appearance. Materials and/or equipment damaged in shipment or otherwise damaged prior to installation shall not be repaired at the job site but shall be replaced with new materials and/or equipment.

V. The responsibility for the furnishing of the proper equipment and/or material and seeing that it is installed as intended by the manufacturer, rests entirely upon the Contractor who shall request advice and supervisory assistance from the representative of specific manufacturers during the installation.

1.11 FLAME SPREAD PROPERTIES OF MATERIALS

A. Materials and adhesives incorporated in this project shall conform to NFPA Standard 255, "Method of Test of Surface Burning Characteristics of Building Materials" and NFPA 90. The classification shall not exceed a flame spread rating of 25 for all materials, adhesives, finishes, etc., specified for each system, and shall not exceed a smoke developed rating of 50.

1.12 REGULATORY REQUIREMENTS

W. The "Authority Having Jurisdiction" over the project described by these documents is the Owner, as an Agency of the State of Texas. As such, it is required that the installation shall meet the minimum standards prescribed in the latest editions of the following listed codes and standards, which are made a part of these specifications. All referenced codes and standards shall be those current at the date of issue of the design documents.

X. National Fire Protection Association Standards (NFPA)

1. NFPA No. 13, Sprinkler System, Installation, 2013 edition.

1. NFPA No. 70, National Electrical Code, 2017 edition.

2. NFPA No. 72D, Proprietary Signaling Systems, 2013 edition.

2. NFPA No. 101, Life Safety Code, 2015 edition.

3. NFPA No. 291, Recommended Practice for Fire Flow Testing and Marking of Hydrants, current edition.

Y. American National Standards Institute (ANSI)

Z. American Society of Testing Materials (ASTM): All current editions of applicable manuals and standards

AA. American Water Works Association (AWWA): All current editions of applicable manuals and standards.

BB. National Electrical Manufacturers' Association (NEMA): All current editions of applicable manuals and standards.

B. International Building and Fire Codes, 2015 edition with City of Stafford, Texas amendments.

CC. City of Stafford, Texas Fire Department as may be applicable to construction on this site.

DD. Texas Occupational Safety Act: All applicable safety standards.

EE. Occupational Safety and Health Act (OSHA).

FF. ADA and ANSI Standards: All work shall be in accord with all regulations and requirements of the Standards and Specifications for Handicapped and Disabled for the Construction of Public Buildings and Facilities in the State of Texas Usable by Physically Handicapped and Disabled persons, ANSI Standards and the requirements of the American Disabilities Act.

GG. Refer to Specification sections hereinafter bound for additional Codes and Standards.

HH. All materials and workmanship shall comply with all applicable state and national codes, specifications, and industry standards. In all cases where Underwriters Laboratories, Inc. has established standards for a particular type material, such material shall comply with these standards. Evidence of compliance shall be the UL "label" or "listing" under Re-Examination Service.

II. The Contract Documents are intended to comply with the aforementioned rules and regulations; however, some discrepancies may occur. Where such discrepancies occur, the Contractor shall immediately notify the Architect/Engineer in writing of said discrepancies and apply for an interpretation. Should the discovery and notification occur after the execution of a contract, any additional work required for compliance with said regulations shall be paid for as covered by Division 01 of these Contract Documents, providing no work of fabrication of materials has been accomplished in a manner of noncompliance. Should the Contractor fabricate and/or install materials and/or workmanship in such a manner that does not comply with the applicable codes, rules and regulations, the Contractor who performed such work shall bear all costs arising in correcting these deficiencies to comply with said rules and regulations

1.13 GENERAL MATERIAL AND EQUIPMENT REQUIREMENTS

A. Storage at Site: The Contractor shall not receive material or equipment at the job site until there is suitable space provided to properly protect equipment from rust, drip, humidity, and dust damage.

B. Capacities shall be not less than those indicated but shall be such that no component or system becomes inoperative or is damaged because of startup or other overload conditions.

C. Conformance with Agency Requirements: Where materials or equipment are specified to be approved, listed, tested, or labeled by the Underwriters Laboratories, Inc., or constructed and/or tested in accordance with the standards of the American Society of Mechanical Engineers or the Air Moving and Conditioning Association, the Contractor shall submit proof that the items furnished under this section of the specifications conform to such requirements. The label of the Underwriters Laboratories, Inc., applied to the item will be acceptable as sufficient evidence that the items conform to such requirements. The ASME stamp or the AMCA label will be acceptable as sufficient evidence that the items conform to the respective requirements.

D. Nameplates: Each major component of equipment shall have the manufacturer's name, address, and catalog number on a plate securely attached to the item of equipment. All data on nameplates shall be legible at the time of Final Inspection.

E. Prevention of Rust: Standard factory finish will be acceptable on equipment specified by model number; otherwise, surfaces of ferrous metal shall be given a rust inhibiting coating. The treatment shall withstand 200 hours in salt spray fog test, in accordance with Method 6061 of Federal Standard No. 141. Immediately after completion of the test, the specimen shall show no signs of wrinkling or cracking and no signs of rust creepage beyond 1/8" on either side of the scratch mark. Where rust inhibitor coating is specified hereinafter, any treatment that will pass the above test is acceptable unless a specific coating is specified except that coal tar or asphalt type coating will not be acceptable unless so stated for a specific item. Where steel is specified to be hot dip galvanized, mill galvanized sheet steel may be used provided all raw edges are painted with a zinc-pigmented paint conforming to Military Specification MIL-P-26915.

F. Protection from Moving Parts: Belts, pulleys, chains, gears, couplings, projecting set screws, keys, and other rotating parts shall be fully enclosed or properly guarded for personnel protection.

G. Verification of Dimensions: The Contractor shall be responsible for the coordination and proper relation of his work to the building structure and to the work of all trades. The Contractor shall visit the premises and become thoroughly familiar with all details of the work and working conditions, to verify all dimensions in the field, and to advise the Architect/Engineer of any discrepancy before performing any work. Adjustments to the work required in order to facilitate a coordinated installation shall be made at no additional cost to the Owner or the Architect/Engineer.

1.14 PROJECT/SITE CONDITIONS

1. Install Work in locations shown on drawings, unless prevented by Project conditions.

2. Prepare drawings showing proposed rearrangement of Work to meet Project conditions, including changes to Work specified in other sections. Obtain permission of Owner before proceeding.

1.15 MANUFACTURER'S RECOMMENDATIONS

JJ. The manufacturer's published directions shall be followed in the delivery, storage, protection, installation, testing and piping of all equipment and material. The Contractor shall promptly notify the Architect/Engineer, in writing, of any conflict between the requirements of the Contract Documents and the manufacturer's directions, and shall obtain the Architect/Engineer's instructions before proceeding with the work. Should the Contractor perform any such work that does not comply with the manufacturer's directions or such instructions from the Architect/Engineer, he shall bear all costs arising in connection with the deficiencies.

1.16 SPACE AND EQUIPMENT ARRANGEMENT

A. The size of Fire Protection equipment indicated on the drawings is based on the dimensions of a particular manufacturer. While other manufacturers may be acceptable, it is the responsibility of the Contractor to determine if the equipment he proposes to furnish will fit in the space. Fabrication drawings shall be prepared when required by the Architect/Engineer or Owner to indicate a suitable arrangement.

B. All equipment shall be installed in a manner to permit access to all surfaces. All valves, motors, drives, and other accessory items shall be installed in a position to allow removal for service without disassembly of another part.

1.17 LARGE APPARATUS

KK. Any large piece of apparatus that is to be installed in any space in the building, and that is too large to permit access through stairways, doorways, or shafts shall be brought to the job and placed in the space before the enclosing structure is completed. Following placement in the space, such apparatus shall be thoroughly, completely protected from damage as hereinafter specified.

1.18 PROTECTION

LL. The Contractor shall at all times take such precautions as may be necessary to properly protect all materials and equipment from damage from the time of delivery until the completion of the work. This shall include the erection of all required temporary shelters and supports to adequately protect any items stored in the open on the site from the weather, the ground and surrounding work; the cribbing of any items above the floor of the construction; and the covering of items in the incomplete building with tarpaulins or other protective covering; the installation of electric heaters in electrical switchgear and similar equipment to prevent moisture damage. Failure on the part of the Contractor to comply with the above will be sufficient cause for the rejection of the items in question.

MM. Take particular care not to damage the building structure in performing work. All finished floors, step treads, and finished surfaces shall be covered to prevent any damage by workers or their tools and equipment during the construction of the building.

NN. Equipment and materials shall be protected from rust both before and after installation. Any equipment or materials found in a rusty condition at the time of final inspection must be cleaned of rust and repainted as specified elsewhere in these specifications.

1.19 COOPERATION BETWEEN TRADES AND WITH OTHER CONTRACTORS

OO. Each trade, subcontractor, and/or Contractor must work in harmony with the various other trades, subcontractors and/or Contractors on the job as may be required to facilitate the progress to the best advantage of the job as a whole. Each trade, subcontractor, and/or Contractor must pursue its work promptly and carefully so as not to delay the general progress of the job. This Contractor shall work in harmony with Contractors working under other contracts on the premises.

1.20 ELECTRICAL WIRING OF MOTORS AND EQUIPMENT

PP. The Contractor shall note that the electrical design and Drawings are based on the equipment scheduled and indicated on the Drawings, and should any mechanical equipment be provided requiring changes to the electrical design, the required electrical changes shall be made at no cost to the Owner.

QQ. The electrical trades shall provide all interconnecting wiring for the installation of all power. The electrical trades shall provide all disconnect switches as required for proper operation, as indicated on the drawings or required by applicable code. All combination starters, individual starters, and other motor starting apparatus not specifically scheduled or specified as provided by the equipment manufacturer under the scope of Division 23, shall be provided under the scope of Division 21.

RR. Provide complete wiring diagrams indicating power wiring and interlock wiring. Diagrams shall be submitted to the Architect/Engineer for review within thirty (30) days after the submittals for equipment have been reviewed. Diagrams shall be based on accepted equipment and shall be complete full phase and interlock control drawings, not a series of manufacturer's individual diagrams. After these diagrams have been reviewed by the Architect/Engineer, copies shall be transmitted to the electrical trades by the Contractor.

1.21 SUPERVISION

SS. Each Contractor and subcontractor shall keep a competent superintendent or foreman on the job at all times. (Refer to the Uniform General Conditions for additional information concerning supervision.)

TT. It shall be the responsibility of each superintendent to study all drawings and familiarize himself with the work to be done by other trades. He shall coordinate his work with other trades and before material is fabricated or installed, make sure that his work will not cause an interference with another trade. Where interferences are encountered, they shall be resolved at the job site by the superintendents involved. Where interferences cannot be resolved without major changes to the drawings, the matter shall be referred to the A/E for ruling.

1.22 SITE OBSERVATION

UU. Site observation by the Architect/Engineer is for the express purpose of verifying compliance by the Contractor with the Contract Documents, and shall not be construed as construction supervision nor indication of approval of the manner or location in which the work is being performed as being a safe practice or place.

1.23 INSTALLATION METHODS

VV. Where to Conceal: All pipes shall be concealed in pipe chases, walls, furred spaces, or above the ceilings of the building unless otherwise indicated.

WW. Where to Expose: In mechanical rooms, janitor's closets tight against pan soffits in exposed "Tee" structures, or storage spaces, but only where necessary, piping may be run exposed. All exposed piping shall be run in the most aesthetic, inconspicuous manner, and parallel or perpendicular to the building lines.

XX. Support: All piping shall be adequately and properly supported from the building structure by means of hanger rods or clamps to walls as herein specified.

YY. Maintaining Clearance: Where limited space is available above the ceilings below concrete beams or other deep projections, pipe shall be sleeved through the projection where it crosses, rather than hung below them in a manner to provide maximum above floor clearance. Sleeves shall be as herein specified. Approval shall be obtained from the Architect/Engineer for each penetration.

ZZ. All pipe shall be cut accurately to measurements established at the building and shall be worked into place without springing or forcing. All pipes run exposed in machinery and equipment rooms shall be installed parallel to the building lines, except that piping shall be sloped to obtain the proper pitch. Piping run in furred ceilings, etc., shall be similarly installed, except as otherwise shown. All pipe openings shall be kept closed until the systems are closed with final connections.

1. All piping not directly buried in the ground shall be considered as "interior piping."

2. Prior to the installation of any ceiling material, gypsum, plaster, or acoustical board, the Contractor shall notify the construction inspector so that arrangement can be made for an inspection of the above ceiling area about to be "sealed" off. The Contractor shall give as much advance notice as possible no less than 5 working days or as agreed by the Project Manager.

3. All above ceiling areas will be subject to a formal inspection before ceiling panels are installed, or installation is otherwise concealed from view. All mechanical and electrical work at and above the ceiling, including items supported by the ceiling grid shall be complete and installed in accordance with contract requirements, including power to other powered items. Adequate lighting shall be provided to permit thorough inspection of all above ceiling items. The inspection will include representatives of the following: General Contractor and each Subcontractor having work above the ceiling, Architect/Engineer and Owner’s Construction Manager. Areas to be included and time of inspection shall be coordinated with the Construction Inspector.

4. The purpose of this inspection is to verify the completeness and quality of the installation of the air conditioning systems, the electrical systems, the plumbing systems, and any other special above ceiling systems such as pneumatic tube, vacuum systems, fire sprinkler piping and cable tray systems. The ceiling supports (tee bar or lath) shall be in place so that access panel and light fixture locations are identifiable and so that clearances and access provisions may be evaluated.

5. No ceiling materials may be installed until the resulting deficiency list from this inspection is worked off and the Construction Inspector has given approval.

1.24 RECORDS FOR OWNER

AAA. The Contractor shall maintain a set of "blueline" prints in the Field Office for the sole purpose of recording "installed" conditions. Daily note all changes made in these drawings in connection with the final installation including exact dimensioned locations of all new underground utilities, services and systems and all uncovered existing active and inactive piping outside the building.

BBB. At contract completion, the Contractor shall provide an electronic file of the revised drawings. The Contractor shall transfer the information from the "blueline" prints maintained as described above, and turn over this neatly marked set of reproducible drawings representing the "as installed" work to the Architect/Engineer for verification and subsequent transmittal to the Owner. The Contractor shall refer to Division 01 of these Specifications, and to the Uniform General Conditions, for additional information. These Drawings shall include as a minimum:

1. Addendum written Drawing changes.

2. Addendum supplementary Drawings.

3. Accurate, dimensioned locations of all underground utilities, services and systems.

4. Identification of equipment work shown on Alternates as to whether alternates were accepted and work actually installed.

5. Change Order written Drawing changes.

6. Change Order supplementary Drawings.

C. Electronic Media

1. The Contractor shall submit three (3) compact discs containing all the Drawings in AutoCAD 2017 or 2018 format.

D. "As installed" plans shall bear a stamp, "stick-on decal" or lettered title block generally located in lower right hand corner of drawing entitled "AS INSTALLED DRAWING" with Company name of the installing trade Subcontractor and with a place for the date and the name of the responsible company representative.

E. In addition to the above, the Contractor shall accumulate during the progress of the job the following data, in duplicate, prepared in a neat brochure or packet folder and turn over to the Architect/Engineer for review, and subsequent delivery to the Owner.

1. All warranties and guarantees and manufacturers' directions on equipment and material covered by the Contract.

2. Two (2) sets of operating instructions for heating and cooling and other mechanical and electrical systems. Operating instructions shall also include recommended preventative maintenance and seasonal changeover procedures.

3. Valve tag charts and diagrams specified herein.

4. Approved wiring diagrams and control diagrams representing "as installed" conditions.

5. Copies of approved shop drawings.

6. Any and all other data and/or drawings required as submittals during construction.

7. Repair parts list of all major items and equipment including name, address and telephone number of local supplier or agent.

7. All of the above data shall be submitted to the Architect/Engineer for approval, and shall be corrected as instructed by the Architect/Engineer prior to submission of the final request for payment.

1.25 CUTTING AND PATCHING

CCC. General: Cut and patch walls, floors, etc., resulting from work in existing construction or by failure to provide proper openings or recesses in new construction.

DDD. Methods of cutting: Openings cut through concrete and masonry shall be made with masonry saws and/or core drills and at such locations acceptable to the Architect/Engineer. Impact type equipment shall not be used except where specifically acceptable to the Architect/Engineer. Openings in precast concrete slabs for pipes shall be core drilled to exact size.

EEE. Restoration: All openings shall be restored to "as new" condition under the appropriate specification section for the materials involved, and shall match remaining surrounding materials and/or finishes.

FFF. Masonry: Where openings are cut through masonry walls, provide and install lintels or other structural supports to protect the remaining masonry. Adequate supports shall be provided during the cutting operation to prevent any damage to the masonry occasioned by the operation. All structural members, supports, etc., shall be of the proper size and shape, and shall be installed in a manner acceptable to the Architect/Engineer.

GGG. Plaster: All mechanical work in areas containing plaster shall be completed prior to the application of the finish plaster coat. Cutting of finish plaster coat will not be permitted.

HHH. Special Note: No cutting, boring, or excavating that will weaken the structure shall be undertaken.

1.26 ROOF PENETRATIONS AND FLASHING

III. Pipe, sleeves, pitch pockets, and flashings compatible with the roofing installation shall be provided and installed by a qualified contractor for all roof penetrations. This shall be the responsibility of the General Contractor.

1.27 EXCAVATION, TRENCHING AND BACKFILL

JJJ. Excavation (See Divisions 00 and 01 for special requirements related to excavation and trenching.):

1. The subcontractors shall perform all excavations of every description, for their particular installations and of whatever substances encountered, to the depths indicated on the drawings and/or required for the installation of piping. All exterior lines shall be installed with a minimum cover of 24," unless otherwise indicated. Generally, more cover shall be provided if grade will permit. All excavation materials not required for backfill or fill shall be removed and wasted as acceptable to the Construction Inspector. All excavations shall be made only by open cut. The banks of trenches shall be kept as nearly vertical as possible and where required, shall be properly sheeted and braced. Trenches shall be not less than 12" wider nor more than 16" wider than the outside edges of the pipe to be laid therein, and shall be excavated true to line so that a clear space not less than 6" nor more than 8" in width is provided on each side of the pipe.

2. The bottom of trenches shall be accurately graded to provide proper fall and uniform bearing and support for each section of the pipe on undisturbed soil or 2" of sand fill at every point along its entire length, except for portions of the pipe sections where it is necessary to excavate for bell holes and for the proper sealing of pipe joints. Bell holes shall be dug after the trench bottom has been graded. Where inverts are not shown, grading shall be determined by the International Fire Code for the service intended and the size used. Bell holes for pipe joints shall be 12" in depth below the trench bottom and shall extend from a point 6" back of the face of the bell. Such bell holes shall be of sufficient width to provide ample room to complete the pipe joint . Bell holes for sewer tile and water pipe shall be excavated only to an extent sufficient to permit accurate work in the making of the joints and to ensure that the pipe, for a maximum of its length, will rest upon the prepared bottom of the trench. Depressions for joints other than bell-and-spigot shall be made in accordance with the recommendations of the joint manufacturer for the particular type of joint used. Special pipe beds shall be provided as specified hereinafter.

3. The lower 4" of the pipe trenches measuring from an overhead line set parallel to the grade line of the sewer shall be excavated only a few feet in advance to the pipe laying, by workers especially skilled in this type of work. Where damage is likely to result from withdrawing sheeting, the sheeting shall be left in place. Except at locations where excavation of rock from the bottom of trenches is required, care shall be taken not to excavate below the depths required. Where rock excavation is required, the rock shall be excavated to a minimum over depth of 6" below the trench depths specified. The over depth rock excavation and all excess trench excavation shall be backfilled with sand. Whenever wet or otherwise unstable soil is incapable of properly supporting the pipe is encountered in the trench bottom, such soil shall be removed to a depth and for the trench lengths required, and then backfilled to trench bottom grade, as hereinafter specified, with sand.

4. All grading in the vicinity of excavation shall be controlled to prevent surface ground water from flowing into the excavations. Any water accumulated in the excavations shall be removed by pumping or other acceptable method. During excavation, material suitable for backfilling shall be stacked in an orderly manner a sufficient distance back from edges of trenches to avoid overloading and prevent slides or cave-ins. Material unsuitable for backfilling shall be wasted and removed from the job site as directed by the Construction Inspector.

5. All shoring and sheeting required to perform and protect the excavations and to safeguard employees and/or adjacent structures shall be provided.

6. Excavate as required under the building in order that all piping, etc., shall clear the ground a minimum of 12" for a distance of 24" on either side. Edges of such excavations shall slope at an angle of not over 45 degrees with the horizontal unless otherwise approved by the Construction Inspector. The bottom of such excavation shall be graded to drain in a manner acceptable to the Construction Inspector.

7. Trenches for water lines inside the building shall be properly excavated, following, in general, the procedures set out for exterior lines. Where floors are to be poured over these lines, they shall be backfilled, tamped and settled with water. Where no flooring is to cover the lines, they shall be backfilled to form a level grade.

8. All surplus materials removed in these trenching operations becomes the property of the Contractor, and shall be disposed of at the expense of the Contractor, at a legal disposal site, off of the campus.

KKK. Backfilling

9. Trenches shall not be backfilled until all required tests are performed and until the piping, utilities systems, etc., as installed are certified by the Owner's inspector to conform to the requirements specified hereinafter. The trenches shall be carefully backfilled with sand to a depth of 12 inches above the top of the pipe. The next layer and subsequent layers of backfill may be excavated materials approved for backfilling, consisting of earth, loam, sandy clay, sand and gravel, soft shale, or other approved materials free from large clods of earth or stones larger than 1-1/2" in diameter, flooded until the pipe has cover of not less than one foot. The remainder of the backfill material shall then be thrown into the trenches, moistened, and tamped or flooded in one-foot layers. Blasted rock, broken concrete or pavement, and large boulders shall not be used as backfill material. Any trenches improperly backfilled, or where settlement occurs, shall be reopened to the depth required for proper compaction, then refilled and mounded over, and smoothed off.

10. Backfill under concrete slabs-on-fill shall be as specified above, shall be gravel, or shall be other such materials more suitable for the application. Installation and compaction shall be as required for compatibility with adjacent materials.

11. Opening and Re-closing Pavement and Lawns: Where excavation requires the opening of existing walks, streets, drives, other existing pavement, or lawns, such surfaces shall be cut as required to install new lines and to make new connections to existing lines. The sizes of the cut shall be held to a minimum, consistent with the work to be accomplished. After the installation of the new work is completed and the excavation has been backfilled and flooded, the area shall be patched, using materials to match those cut out. The patches shall thoroughly bond with the original surfaces and shall be level with them, and shall meet all the requirements established by the authorities having jurisdiction over such areas.

12. Excavation in Vicinity of Trees: All trees including low hanging limbs within the immediate area of construction shall be adequately protected to a height of at least 5 ft. to prevent damage from the construction operations and/or equipment. All excavation within the outermost limb radius of all trees shall be accomplished with extreme care.

All roots located within this outermost limb radius shall be brought to the attention of the Construction Inspector before they are cut or damaged in any way. The Construction Inspector will give immediate instructions for the disposition of it. All stumps and roots encountered in the excavation, which are not within the outermost limb radius of existing trees, shall be cut back to a distance of not less than 18" from the outside of any concrete structure or pipeline. No chips, parts of stumps, or loose rock shall be left in the excavation. Where stumps and roots have been cut out of the excavation, clean compacted dry bank sand shall be backfilled and tamped.

1.28 OPERATION PRIOR TO COMPLETION

LLL. When any piece of Fire Protection equipment is operable and it is to the advantage of the Contractor to operate the equipment, he may do so, providing that he properly supervises the operation, and has the Project Manager’s written permission to do so. The warranty period shall, however, not commence until the equipment is operated for the beneficial use of the Owner, or date of substantial completion, whichever occurs first.

MMM. Regardless of whether or not the equipment has or has not been operated, the Contractor shall properly clean the equipment, properly adjust and complete all deficiency list items prior to being started, commissioned and before final acceptance by the Owner. The date of acceptance and performance certification will be the same date.

1.29 CHECKING AND TESTING MATERIALS AND/OR EQUIPMENT

NNN. Check inspections shall include fire sprinkler piping, equipment, overall fire protection system controls, and such other items hereinafter specified or specifically designated by the Architect/Engineer.

OOO. Contractor shall fill out and submit a “Material and test certificate” in compliance with NFPA 13 – 10.10.0 AND receive fire marshal sign-off prior to 100% payment of underground portion of work.

PPP. Contractor shall fill out and submit a “Material and test certificate” per NFPA 13 – 16.1 AND receive fire marshal sign-off prior to payment of 100% for above ground work.

QQQ. Third party inspections shall be completed prior to final payment.

RRR. Contractor shall perform work as required to comply with third party inspections.

1.30 COOPERATION AND CLEANUP

SSS. It shall be the responsibility of each trade to cooperate fully with the other trades on the job to help keep the job site in a clean and safe condition. At the end of each day's work, each trade shall properly store all of his tools, equipment and materials and shall clean his debris from the job. Upon the completion of the job, each trade shall immediately remove all of his tools, equipment, any surplus materials and all debris caused by that portion of the work.

1.31 CLEANING AND PAINTING

TTT. All equipment and piping, etc., furnished and installed in exposed areas under Division 21 of these specifications and as hereinafter specified shall be cleaned, prepared, and painted according to the following specification. In the event of a conflict between the specifications referenced, the provisions of this specification shall prevail only for Division 21 work.

UUU. All purchased equipment shall be delivered to the job with a suitable factory protective finish with the colors hereinafter specified. The following materials shall not be painted: copper, galvanized metal, stainless steel, fiberglass, PVC, and PVDF.

VVV. Before painting, materials and equipment surfaces shall be thoroughly cleaned of cement, plaster, and other foreign materials, and all oil and grease spots shall be removed. Such surfaces shall be carefully wiped and all cracks and corners scraped out. Exposed metalwork shall be carefully brushed down with the steel brushes to remove rust and other spots and left smooth and clean.

WWW. Color of finish painting shall be painted in accordance with The Stafford Municipal School District Standard Color Schedule for machinery spaces using Pratt and Lambert, Inc.'s "Effector" enamel, or approved equal. Two (2) coats shall be applied with a light tint first coat and deep color for final coat. Colors shall be as follows:

ITEM	COLOR	"P and L" PAINT NUMBER
Fire Protection Equipment and Piping	Safety Red	R131R (Vibrant Red)

1. Note that the paint specified above is included for purposes of establishing a QUALITY THAT shall be used on this Project. The proposed paint shall be submitted, and alternatives will be considered using the submittal procedures specified in this document.

XXX. Jacketing on insulation shall not be painted.

YYY. No nameplates on equipment shall be painted, and suitable protection shall be afforded to the plates to prevent their being rendered illegible due to the painting operation.

ZZZ. Scope of painting for Division 21 Work in areas other than those defined as "exposed" is as follows:

2. All uncovered steel pipe, supports, exposed pipe and hanger rod threads, and hangers in underfloor spaces shall be cleaned and painted with two (2) coats of Tropical Paint Co. No. 77-black asphaltic emulsion. Galvanized steel and copper lines in these spaces shall not be painted.

3. All canvas finishes including those underfloor and in concealed spaces shall be painted with one sizing coat if not already sized, containing mildew resistant additive and Arabol adhesive prior to any other specified finish paint.

4. <u>All</u> fire protection piping shall be painted whether concealed or exposed, in all areas of the project without exception. Fire protection piping shall be painted safety red. These "safety" colors shall be as defined by OSHA.

5. If insulated, the piping shall be primed, only, prior to insulation, and the insulation jacketing shall be painted as specified for piping. <u>The requirements of this paragraph are "primary" and have priority over any conflicting Specification or instruction, should a conflict in the Construction Documents exist.</u>

PART 2 - PRODUCTS

2.01 GENERAL

A. All materials shall meet or exceed all applicable referenced standards, federal, state and local requirements, and conform to codes and ordinances of authorities having jurisdiction.

B. All equipment installed shall have local representation, local factory authorized service, and a local stock of repair parts.

C. Responsibility for furnishing proper equipment and/or material and ensuring that equipment and/or material is installed as intended by the manufacturer, rests entirely upon the Contractor. Contractor shall request advice and supervisory assistance from the representative of specific manufacturers during the installation.

D. All materials, unless otherwise specified, shall be new, free from all defects, suitable for the intended use and of the best quality of their respective kinds. Materials and equipment shall be installed in accordance with the manufacturer's recommendations and the best standard practice for the type of Work involved. All Work shall be executed by mechanics skilled in their respective trades, and the installations shall provide a neat, precise appearance. Materials and/or equipment damaged in shipment or otherwise damaged prior to installation shall not be repaired at the job Site but shall be replaced with new materials and/or equipment.

E. Materials and equipment manufactured domestically are preferred when possible. Materials and equipment that are not available from a domestic manufacturer may be by a non-domestic manufacturer provided they fully comply with Contract Documents.

F. Prevention of Rust: Standard factory finish will be acceptable on equipment specified by model number; otherwise, surfaces of ferrous metal shall be given a rust inhibiting coating.

2.02 NAMEPLATES

A. Each major component of equipment shall have the manufacturer's name, address, and catalog number on a plate securely attached to the item of equipment. All data on nameplates shall be legible at the time of Final Inspection.

B. Nameplates shall be black laminated rigid phenolic with white core. Nameplate minimum size shall be 1 inch high by 3 inches long with 3/16-inch-high engraved white letters.

C. Nameplate Fasteners: Fasten nameplates to the front of equipment only by means of stainless steel self-tapping screws. Stick-ons or adhesives will not be allowed unless the NEMA enclosure rating is compromised, then only epoxy adhesive shall be used to attach nameplates.

D. Nameplate Information: In general, the following information is to be provided for the types of electrical components or enclosures supplied with equipment.

1. Individual Starters, Contactors, Disconnect Switches, and Similar Equipment: Identify the device, and voltage characteristics source and load served.

2.03 WALL, FLOOR AND CEILING PLATES (ESCUTCHEONS)

A. Except as otherwise noted, provide stainless steel or chrome plated brass floor and ceiling plates around all pipes passing exposed through walls, floors or ceilings, in any spaces except underfloor and plenum spaces.

B. Plates shall be sized to fit snugly against the outside of the pipe or against the insulation on lines that are insulated and positively secured to such pipe or insulation.

C. For finished ceiling installation, secure escutcheons to ceiling with escutcheon fasteners.

D. Plates will not be required for piping where pipe sleeves extend ¾-inch or more above finished floor.

2.04 ROOF PENETRATIONS AND FLASHING

A. Pipe sleeves, pitch pockets and flashings compatible with the roofing installation shall be provided and installed for all roof penetrations by a contractor qualified in such Work. Installation shall comply with the Contract Documents and with FM General Data Sheets 1-28, 1-29, 1-31 & 1-49 along with the FM approval guide.

PART 3 - EXECUTION

3.01 PREPARATION

A. Cooperate with trades of adjacent, related or affected materials or operations, and with trades performing continuations of this Work in order to effect timely and accurate placing of Work and to coordinate, in proper and correct sequence, the Work of such trades.

B. The size of equipment indicated on the Drawings is based on the dimensions of a particular manufacturer. While other manufacturers may be acceptable, it is the responsibility of the Contractor to determine that the equipment proposed will fit in the space. Fabrication Drawings shall be prepared when required by the Architect/Engineer or Owner to indicate a suitable arrangement.

C. All equipment shall be installed in a manner to permit access to all surfaces. All valves, motors, drives, filters, and other accessory items shall be installed in a position to allow removal for service without disassembly of another part.

D. Space Requirements:

1. Consider space limitations imposed by contiguous Work in location of equipment and material. Do not provide equipment or material which is not suitable in this respect.

2. Make changes in material and equipment locations of up to five (5) feet, to allow for field conditions prior to actual installation, and as directed by the Architect/Engineer at no additional cost to the Owner.

E. Contractor shall note that the electrical design and Drawings are based on the equipment scheduled and indicated on the Drawings. Should any equipment be provided requiring changes to the electrical design, the required electrical changes shall be made at no cost to the Owner.

3.02 INSTALLATION

A. Installation shall meet or exceed all applicable federal, state and local requirements, referenced standards and conform to codes and ordinances of authorities having jurisdiction.

B. All installation shall be in accordance with manufacturer's published recommendations, as shown on the drawings and stated in the specifications.

C. Piping may be run exposed in rooms typically without ceilings such as mechanical rooms, janitor's closets, tight against pan soffits in exposed "tee" structures, or storage spaces, but only where necessary. Shutoff and isolation valves shall be easily accessible.

D. All pipe, conduits, etc., shall be cut accurately to measurements established at the building and shall be worked into place without springing or forcing. All ducts, pipes and conduits run exposed in machinery and equipment rooms shall be installed parallel to the building lines, except that piping shall be sloped to obtain the proper pitch. Piping and ducts run in furred ceilings, etc., shall be similarly installed, except as otherwise shown. All pipe openings shall be kept closed until the systems are closed with final connections.

E. Prior to the installation of any ceiling material, gypsum, plaster or acoustical board, the Contractor shall notify Project Manager so that arrangement can be made for an inspection of the above-ceiling area about to be "sealed" off. The Contractor shall provide written notification to the Owner at least five (5) calendar days prior to the inspection.

F. Precedence of Materials:

1. The Specifications determine the nature and setting of materials and equipment. The Drawings establish quantities, dimensions and details.

2. If interference is encountered, the following installation precedence of materials shall guide the Contractor to determine which trade shall be given the "Right of Way":

a. Building lines

b. Structural members

c. Structural support frames supporting ceiling equipment

d. Soil and drain piping

e. Vent piping

f. Supply, return and outside air ductwork

g. Exhaust ductwork

h. Condensate piping

i. Fire protection piping

j. Domestic water (cold and hot, softened, treated)

k. Refrigerant piping

l. Electrical conduit

3. Coordinate fire protection system with other trade systems as required to maintain system right-of-ways.

3.03 TESTING

A. When any piece of equipment is operable and it is to the advantage of the Contractor to operate the equipment, Contractor may do so, provided that Contractor properly supervises the operation, and has the Project Manager’s written permission to do so. The warranty period shall, however, not commence until such time as the equipment is operated for the beneficial use of the Owner, or date of Substantial Completion, whichever occurs first.

B. Regardless of whether or not the equipment has or has not been operated, the Contractor shall properly clean the equipment, install clean and properly adjust, and complete all deficiency list items before final acceptance by the Owner. The date of acceptance and performance certification will be the same date.

C. The Contractor shall execute, at no additional cost to the Owner, any tests required by the Owner or the National Fire Protection Association (NFPA), ASTM, etc. standards listed. The Contractor shall provide all equipment, materials and labor for making such tests. The Owner will pay reasonable amounts of fuel and electrical energy costs for system tests. Fuel and electrical energy costs for system adjustment and tests, which follow Substantial Completion by the Owner, will be borne by the Owner.

D. Notify the Project Manager and the Architect/Engineer in writing at least five (5) calendar days or as agreed by the Project Manager prior to each test and prior to other Specification requirements requiring Owner and Architect/Engineer to observe and/or approve tests.

E. All tests shall have pertinent data logged by the Contractor at the time of testing. Data shall include date, time, personnel performing, observing and inspecting, description of the test and extent of system tested, test conditions, test results, specified results and other pertinent data. Data shall be delivered to the Architect/Engineer as specified under "Requirements for Final Acceptance." The Contractor or Contractor’s authorized job superintendent shall legibly sign all Test Log entries.

F. Maintain Log of Tests as hereinafter specified.

G. See Specifications hereinafter for additional tests and requirements.

H. Refer to Commissioning Specification Sections for additional Start-up, pre-functional and operational checkout, and for functional performance test procedures.

3.04 TRAINING

A. Operating and Maintenance Manuals and instruction shall be provided as specified under the Division 01 Section entitled "Project Closeout Procedures."

B. Specific training and operating instructions for individual equipment components shall be as specified in the individual Specification Sections.

END OF SECTION 21 00 00

21 05 29

FIRE PROTECTION HANGERS AND SUPPORTS

PART 1 - GENERAL

1.01 RELATED DOCUMENTS

A. Drawings and general provisions of the Contract, including General and Supplementary Conditions and Division 01 Specification Sections, apply to this Section.

1.02 SUMMARY

A. Section Includes:

1. Metal pipe hangers and supports.
2. Trapeze pipe hangers.
3. Metal framing systems.
4. Fastener systems.
5. Equipment supports.

B. Related Requirements:

1. Section 055000 "Metal Fabrications" for structural-steel shapes and plates for trapeze hangers for pipe and equipment supports.

1.03 ACTION SUBMITTALS

A. Product Data: For each type of product.

B. Shop Drawings: Show fabrication and installation details and include calculations for the following:

1. Trapeze pipe hangers.
2. Metal framing systems.
3. Equipment supports.

C. Delegated-Design Submittal: For trapeze hangers indicated to comply with performance requirements and design criteria, including analysis data signed and sealed by the qualified professional engineer responsible for their preparation.

1. Detail fabrication and assembly of trapeze hangers.
2. Include design calculations for designing trapeze hangers.

1.04 INFORMATIONAL SUBMITTALS

A. Welding certificates.

1.05 QUALITY ASSURANCE

A. Structural-Steel Welding Qualifications: Qualify procedures and personnel according to AWS D1.1/D1.1M.

B. Pipe Welding Qualifications: Qualify procedures and operators according to 2015 ASME Boiler and Pressure Vessel Code, Section IX.

PART 2 - PRODUCTS

2.01 PERFORMANCE REQUIREMENTS

A. Delegated Design: Engage a qualified professional engineer, as defined in Section 014000 "Quality Requirements," to design trapeze pipe hangers and equipment supports.

B. Structural Performance: Hangers and supports for fire-suppression piping and equipment shall withstand the effects of gravity loads and stresses within limits and under conditions indicated according to ASCE/SEI 7.

1. Design supports for multiple pipes, including pipe stands, capable of supporting combined weight of supported systems, system contents, and test water.

2. Design equipment supports capable of supporting combined operating weight of supported equipment and connected systems and components.

C. NFPA Compliance: Comply with NFPA 13 and NFPA 14.

D. UL Compliance: Comply with UL 203.

2.02 METAL PIPE HANGERS AND SUPPORTS

A. Carbon-Steel Pipe Hangers and Supports:

1. Description: Factory-fabricated components, NFPA approved, UL listed, or FM approved for fire-suppression piping support.

2. Galvanized Metallic Coatings: Pre-galvanized or hot-dip galvanized.

3. Hanger Rods: Continuous-thread rod, nuts, and washer made of carbon steel.

2.03 TRAPEZE PIPE HANGERS

A. Description: MSS SP-58, Type 59, shop- or field-fabricated pipe-support assembly, made from structural-carbon-steel shapes, with NFPA-approved, UL-listed, or FM-approved carbon-steel hanger rods, nuts, saddles, and U-bolts.

2.04 METAL FRAMING SYSTEMS

A. MFMA Manufacturer Metal Framing Systems:

1. Manufacturers: Subject to compliance with requirements, provide products by one of the following:

   a. B-line, an Eaton business.

   b. Flex-Strut Inc.

   c. Unistrut; Part of Atkore International.

2. Description: Shop- or field-fabricated pipe-support assembly, made of steel channels, accessories, fittings, and other components for supporting multiple parallel pipes.

3. Standard: Comply with MFMA-4, factory-fabricated components for field assembly.

4. Channels: Continuous slotted carbon-steel channel with inturned lips.

5. Channel Width: Selected for applicable load criteria.

6. Channel Nuts: Formed or stamped nuts or other devices designed to fit into channel slot and, when tightened, prevent slipping along channel.

7. Hanger Rods: Continuous-thread rod, nuts, and washer made of carbon steel.

8. Metallic Coating: Hot-dip galvanized.

2.05 FASTENER SYSTEMS

A. Powder-Actuated Fasteners: Not allowed.

B. Mechanical-Expansion Anchors: NFPA-approved, UL-listed, or FM-approved, insert-wedge-type anchors, for use in hardened portland cement concrete; with pull-out, tension, and shear capacities appropriate for supported loads and building materials where used.

1. Manufacturers: Subject to compliance with requirements, provide products by one of the following:

   a. Hilti, Inc.

   b. ITW Ramset/Red Head; Illinois Tool Works, Inc.

   c. MKT Fastening, LLC.

2. Indoor Applications: Zinc-coated or stainless steel.

3. Outdoor Applications: Stainless steel.

2.06 EQUIPMENT SUPPORTS

A. Description: NFPA-approved, UL-listed, or FM-approved, welded, shop- or field-fabricated equipment support, made from structural-carbon-steel shapes.

2.07 MATERIALS

A. Aluminum: ASTM B221.

B. Carbon Steel: ASTM A1011/A1011M.

C. Structural Steel: ASTM A36/A36M, carbon-steel plates, shapes, and bars; black and galvanized.

D. Stainless Steel: ASTM A240/A240M.

E. Grout: ASTM C1107/C1107M, factory-mixed and -packaged, dry, hydraulic-cement, non-shrink and nonmetallic grout, suitable for interior and exterior applications.

1. Properties: Non-staining, non-corrosive, and non-gaseous.

2. Design Mix: 5000-psi, 28-day compressive strength.

PART 3 - EXECUTION

3.01 APPLICATION

A. Comply with requirements in Section 078413 "Penetration Firestopping" for firestopping materials and installation, for penetrations through fire-rated walls, ceilings, and assemblies.

B. Strength of Support Assemblies: Where not indicated, select sizes of components, so strength will be adequate to carry present and future static loads within specified loading limits. Minimum static design load used for strength determination shall be weight of supported components plus 200 lb.

3.02 HANGER AND SUPPORT INSTALLATION

A. Metal Pipe-Hanger Installation: Comply with installation requirements of approvals and listings. Install hangers, supports, clamps, and attachments as required to properly support piping from building structure.

B. Metal Trapeze Pipe-Hanger Installation: Comply with MSS SP-58. Arrange for grouping of parallel runs of horizontal piping, and support together on field-fabricated trapeze pipe hangers.

1. Pipes of Various Sizes: Support together and space trapezes for smallest pipe size, or install intermediate supports for smaller-diameter pipes as specified for individual pipe hangers.

2. Field fabricate from ASTM A36/A36M carbon-steel shapes selected for loads being supported. Weld steel according to AWS D1.1/D1.1M.

C. Metal Framing System Installation: Arrange for grouping of parallel runs of piping, and support together on field-assembled metal strut systems.

D. Fastener System Installation:

1. Install mechanical-expansion anchors in concrete, after concrete is placed and completely cured. Install fasteners according to manufacturer's written instructions. Install in accordance with approvals and listings.

E. Install hangers and supports complete with necessary attachments, inserts, bolts, rods, nuts, washers, and other accessories.

F. Equipment Support Installation: Fabricate from welded-structural-steel shapes.

G. Install hangers and supports to allow controlled thermal and seismic movement of piping systems, to permit freedom of movement between pipe anchors, and to facilitate action of expansion joints, expansion loops, expansion bends, and similar units.

H. Install lateral bracing with pipe hangers and supports to prevent swaying.

I. Install building attachments within concrete slabs or attach to structural steel. Install additional attachments at concentrated loads, including valves, flanges, and strainers, NPS 2-1/2 and larger and at changes in direction of piping. Install concrete inserts before concrete is placed; fasten inserts to forms, and install reinforcing bars through openings at top of inserts.

J. Load Distribution: Install hangers and supports, so that piping live and dead loads and stresses from movement will not be transmitted to connected equipment.

K. Pipe Slopes: Install hangers and supports to provide indicated pipe slopes and to not exceed maximum pipe deflections allowed by ASME B31.9 for building services piping.

3.03 EQUIPMENT SUPPORTS

A. Fabricate structural-steel stands to suspend equipment from structure overhead or to support equipment above floor.

B. Grouting: Place grout under supports for equipment, and make bearing surface smooth.

C. Provide lateral bracing, to prevent swaying, for equipment supports.

3.04 METAL FABRICATIONS

A. Cut, drill, and fit miscellaneous metal fabrications for trapeze pipe hangers and equipment supports.

B. Fit exposed connections together to form hairline joints. Field weld connections that cannot be shop welded because of shipping size limitations.

C. Field Welding: Comply with AWS D1.1/D1.1M procedures for shielded, metal arc welding; appearance and quality of welds; and methods used in correcting welding work; and with the following:

1. Use materials and methods that minimize distortion and develop strength and corrosion resistance of base metals.

2. Obtain fusion without undercut or overlap.

3. Remove welding flux immediately.

4. Finish welds at exposed connections, so no roughness shows after finishing and so contours of welded surfaces match adjacent contours.

3.05 ADJUSTING

A. Hanger Adjustments: Adjust hangers to distribute loads equally on attachments and to achieve indicated slope of pipe.

B. Trim excess length of continuous-thread hanger and support rods to 1-1/2 inches.

3.06 PAINTING

A. Touchup: Cleaning and touchup painting of field welds, bolted connections, and abraded, shop-painted areas on miscellaneous metal are specified in Section 099000 "Painting and Coating."

B. Galvanized Surfaces: Clean welds, bolted connections, and abraded areas, and apply galvanizing-repair paint to comply with ASTM A780/A780M.

3.07 HANGER AND SUPPORT SCHEDULE

A. Specific hanger and support requirements are in Sections specifying piping systems and equipment.

B. Comply with NFPA requirements for pipe-hanger selections and applications that are not specified in piping system Sections.

C. Use hangers and supports with galvanized metallic coatings for piping and equipment that will not have field-applied finishes.

D. Use nonmetallic coatings on attachments for electrolytic protection where attachments are in direct contact with copper tubing.

E. Use carbon-steel pipe hangers and supports, metal trapeze pipe hangers and metal framing systems and attachments for general service applications.

F. Use stainless-steel pipe hangers and stainless-steel or corrosion-resistant attachments for hostile environment applications.

G. Horizontal-Piping Hangers and Supports: Comply with NFPA requirements. Unless otherwise indicated and except as specified in piping system Sections, install the following types:

1. Adjustable, Steel Clevis Hangers (MSS Type 1): For suspension of non-insulated or insulated, stationary pipes NPS 1/2 to NPS 30.

2. Steel Pipe Clamps (MSS Type 4): For suspension of NPS 1/2 to NPS 24 if little or no insulation is required.

3. Adjustable, Swivel-Ring Band Hangers (MSS Type 10): For suspension of non-insulated, stationary pipes NPS 1/2 to NPS 8.

4. Split Pipe Ring with or without Turnbuckle Hangers (MSS Type 11): For suspension of non-insulated, stationary pipes NPS 3/8 to NPS 8.

5. Extension Hinged or Two-Bolt Split Pipe Clamps (MSS Type 12): For suspension of non-insulated, stationary pipes NPS 3/8 to NPS 3.

6. U-Bolts (MSS Type 24): For support of heavy pipes NPS 1/2 to NPS 30.

7. Pipe Saddle Supports (MSS Type 36): For support of pipes NPS 4 to NPS 36, with steel-pipe base stanchion support and cast-iron floor flange or carbon-steel plate.

8. Pipe Stanchion Saddles (MSS Type 37): For support of pipes NPS 4 to NPS 36, with steel-pipe base stanchion support and cast-iron floor flange or carbon-steel plate, and with U-bolt to retain pipe.

9. Adjustable Pipe Saddle Supports (MSS Type 38): For stanchion-type support for pipes NPS 2-1/2 to NPS 36 if vertical adjustment is required, with steel-pipe base stanchion support and cast-iron floor flange.

H. Vertical-Piping Clamps: Unless otherwise indicated and except as specified in piping system Sections, install the following types:

1. Extension Pipe or Riser Clamps (MSS Type 8): For support of pipe risers NPS 3/4 to NPS 24.

2. Carbon- or Alloy-Steel Riser Clamps (MSS Type 42): For support of pipe risers NPS 3/4 to NPS 24 if longer ends are required for riser clamps.

I. Hanger-Rod Attachments: Comply with NFPA requirements.

J. Building Attachments: Comply with NFPA requirements. Unless otherwise indicated and except as specified in piping system Sections, install the following types:

1. Steel or Malleable-Concrete Inserts (MSS Type 18): For upper attachment to suspend pipe hangers from concrete ceiling.

2. C-Clamps (MSS Type 23): For structural shapes.

3. Side-Beam Brackets (MSS Type 34): For sides of steel or wooden beams.

K. Comply with NFPA requirements for trapeze pipe-hanger selections and applications that are not specified in piping system Sections.

L. Comply with MFMA-103 for metal framing system selections and applications that are not specified in piping system Sections.

M. Use mechanical-expansion anchors instead of building attachments where required in concrete construction.

END OF SECTION 210529

21 05 53

FIRE PROTECTION PIPING AND EQUIPMENT IDENTIFICATION

PART 1 - GENERAL

1.01 RELATED DOCUMENTS

A. Drawings and general provisions of the Contract, including General and Supplementary Conditions and Division 01 Specification Sections, apply to this Section.

1.02 THE FOLLOWING SECTIONS ARE TO BE INCLUDED AS IF WRITTEN HEREIN:

A. Section 21 00 00 – General Requirements for Fire Suppression.

B. Section 21 05 29 – Fire Protection Supports and Sleeves.

1.03 SECTION INCLUDES

A. Nameplates

B. Tags

C. Pipe Markers

1.04 RELATED SECTIONS

A. Section 09 91 00 – Painting: Identification painting.

1.05 REFERENCES

A. ASME A13.1 – Scheme for the Identification of Piping Systems.

B. IFC - International Fire Code, 2015 edition.

C. NFPA 13 - Sprinkler System, Installation, 2013 edition.

1.06 SUBMITTALS

A. Submit under provisions of Section 21 00 00.

B. Shop Drawings: Submit list of wording, symbols, letter size, and color coding for fire suppression equipment, piping and valve identification.

1. Equipment Label Schedule: Provide a schedule of all equipment to be labeled with the proposed content for each label.

2. Access Panel and Door Markers: Provide a schedule of all panels and doors to be labeled with the proposed content for each label.

3. Pipe Label Schedule: Provide a schedule of each piping systems indicating a proposed nomenclature and location of all pipe markers.

4. Valve Chart and Schedule: Provide a proposed valve numbering scheme and schedule for each piping system. Tabulate valve number, room or space location, function, valve manufacturer's name and model number, piping system, system abbreviation as shown on tag, normal-operating position (open, closed, or modulating), and variations for identification. Mark valves intended for emergency shut-off and similar special uses.

5. Warning Tags: Provide a schedule of all equipment to be labeled with the proposed content for each label.

C. Product Data: Provide manufacturers' catalog literature for each product required, including:

1. Preparation instructions and recommendations.

2. Storage and handling requirements and recommendations.

3. Installation methods.

D. Samples: Submit two (2) of each type of label, tag, etc., of the approximate size specified of implied in the Specification.

E. Manufacturer's Installation Instructions: Indicate special procedures, and installation.

1.07 COORDINATION

A. Coordinate installation of identifying devices with completion of covering and painting of surfaces where devices are to be applied.

B. Coordinate installation of identifying devices with locations of access panels and doors.

C. Install identifying devices before installing acoustical ceilings and similar concealment.

1.08 PROJECT RECORD DOCUMENTS

A. Submit under provisions of Section 21 00 00.

B. Record actual locations of tagged valves and update schedules accordingly.

1.09 QUALITY ASSURANCE

A. Manufacturer Qualifications: Company specializing in manufacturing products specified in this section with minimum five (5) years documented experience

B. Installer Qualifications: Company specializing in performing Work of this section with minimum five (5) years documented experience.

C. ASME Standards: Comply with ASME A13.1 for color scheme, lettering size, length of color field, and viewing angles of identification devices.

1.10 DELIVERY, STORAGE, AND HANDLING

A. Store products in manufacturer's unopened packaging with labels clearly identifying product name and manufacturer until ready for installation.

B. Storage: Store materials in clean, dry area indoors until ready for installation.

C. Handling: Protect materials and finish from damage during handling and installation.

PART 2 - PRODUCTS

2.01 GENERAL

A. All materials shall meet or exceed all applicable referenced standards, federal, state and local requirements, and conform to codes and ordinances of authorities having jurisdiction.

B. Make it possible for the personnel operating and maintaining the equipment and systems in this project to readily identify the various pieces of equipment, valves, piping, etc., by marking them. All items of equipment such as fire pumps, etc., are to be clearly marked using engraved nameplates as specified. Use equipment identification numbers that appear on the design documents and/or equipment identification numbers furnished by the Owner's Designated Representative.

C. General: Provide manufacturer's standard products of categories and types required for each application specified. For each identification type, provide all products from same manufacturer with same text, style, color, shape, and other identification features.

1. Provide nameplates with the unit number on all mechanical equipment.

2. Access panel and door markers for standpipes, hose and fire extinguisher cabinets, fire and smoke dampers, etc.

3. Provide pipe identification labels including direction-of-flow arrows and with service indicated. All labels shall have background colors matched with specific service designation.

4. Provide valve tag numbers on all valves.

5. Warning tags at motors and equipment controlled by automatic starters, etc.

2.02 MANUFACTURERS

A. Equipment Tags, Valve Tags, and Markers:

1. Marking Services, Inc.

2. Seton, owned by Brady Corporation.

3. Brady Corporation

4. Graphic Products, Inc.

5. Brimar Industries.

6. Craftmark.

2.03 EQUIPMENT LABELS

A. Plastic Labels for Equipment:

1. Material and Thickness:

a. Indoors: Multilayer, multicolor, plastic labels for fire suppression piping and equipment engraving, 1/8 inch thick, and having predrilled holes for attachment hardware.

b. Outdoors: Chemically resistant plastic with printed graphics protected by a chemical and UV resistant top laminate.

2. Letter Color: White

3. Background Color: Red

4. Maximum Temperature: Able to withstand temperatures up to 160 deg F.

5. Minimum Label Size: Length and width vary for required label content, but not less than 1 by 3 inches.

6. Minimum Letter Size: 1/4 inch for name of units if viewing distance is less than 24 inches, 1/2 inch for viewing distances up to 72 inches, and proportionately larger lettering for greater viewing distances. Include secondary lettering two-thirds (2/3) to three-fourths (3/4) the size of principal lettering.

7. Fasteners: Stainless-steel self-tapping screws.

B. Label Content: Nomenclature on the label is to include the name of the item, its mark number, area, space, or equipment served, and other pertinent information. Use equipment identification numbers that appear on the design documents and/or equipment identification numbers furnished by the Owner.

C. Equipment Label Schedule: For each item of equipment to be labeled, on 8-1/2-by-11-inch bond paper. Tabulate equipment identification number and identify Drawing numbers where equipment is indicated (plans, and schedules), plus the Specification Section number and title where equipment is specified. Equipment schedule shall be included in operation and maintenance data.

D. All scheduled equipment shall be identified with an Equipment Tag.

2.04 ACCESS PANEL AND DOOR MARKERS

A. Material and Thickness: 1/16-inch- thick, engraved laminated plastic, with abbreviated terms and numbers corresponding to identification.

B. Letter Color: White

C. Background Color: Red

D. Fasteners: Self-tapping, stainless steel screws or contact-type, permanent adhesive.

2.05 VALVE CHART

A. The Contractor shall prepare and install, in a suitable glazed anodized aluminum frame, typewritten valve charts giving the number, location, function and area or rooms served for each line valve installed under this contract.

B. Each valve shall be numbered on these charts in accordance with the system of which it is a part of and its location.

2.06 VALVE TAGS

A. Provide and install identification tags lettered and numbered to correspond to the information shown on the charts described above.

B. Valve tags shall conform to ANSI A13.1.Valve Tags (Indoors): Stamped or engraved with 1/4 inch letters for piping abbreviation and 1/2 inch numbers.

1. Tag Material: Brass, 0.032 inch minimum thickness, and having predrilled or stamped holes for attachment hardware.

2. Background Color: Natural brass.

3. Letter Color: Black.

4. Tag Size: 1-1/2 inches, round.

5. Fasteners: Brass S-Hooks and Jack Chain.

C. Valve Tags (Outdoors):

1. Material: Chemically resistant plastic with printed graphics protected by a chemical and UV resistant top laminate, and having stainless steel grommet protected predrilled holes with for attachment hardware.

2. Background Color: Red.

3. Letter Color: White.

4. Tag Size: Minimum 1-1/2 inches.

5. Fasteners: Stainless steel S-Hooks and stainless steel Jack Chain.

2.07 PIPE LABELS (INDOOR PIPING)

A. Provide labels for above ground piping located indoors, and not exposed to sunlight or a harsh environment.

B. Pipe labels shall pre-printed, color-coded, with lettering indicating service, and showing flow direction in conformance with ANSI A13.1 as indicated below.

Pipe Contents	Label Abbreviation	Label Colors (Background/Text)
Fire Suppression Water	FIRE	Red/White
Wet Sprinklers	WET FIRE	Red/White

C. Lettering shall be sub-surface printed and protected from direct contact by a layer of plastic. Markers with surface printed lettering will not be accepted.

D. Arrow markers must have same ANSI background colors as their companion pipe markers, or be incorporated into the pipe identification marker.

E. Plastic Labels for Pipe O.D. less than 8 inches: Factory fabricated, flexible, semi-rigid plastic, preformed to fit around full circumference pipe or pipe covering and to attach to pipe without fasteners or adhesive in contact with the pipe surface.

F. Pipe Labels for Pipe O.D. 8 inches and Over: Strap-on, semi rigid plastic to cover partial circumference of pipe and to attach to pipe with nylon ties.

G. Pipe Label Contents: Include identification of piping service using same designations or abbreviations as used on Drawings, pipe size, and an arrow indicating flow direction.

1. Flow-Direction Arrows: Integral with piping system service lettering to accommodate both directions or as separate unit on each pipe label to indicate flow direction.

2. Lettering Size: At least 1-1/2 inches high.

H. Pipe markers and arrow markers also shall be provided for all piping systems.

2.08 PIPE LABELS (OUTDOOR PIPING)

A. Provide labels for above ground piping located outside, and exposed to sunlight or a harsh environment, the following product is specified.

B. Pre-printed, color-coded, with lettering indicating service, and showing flow direction.

C. Pipe markers shall be constructed of printed 5 mil polyester and top laminated with ultraviolet and chemical resistant plastic film that is engineered to provide maximum durability of the printed legend. Markers shall be pre-coiled to wrap entirely around the circumference of pipe up to 10 inch outside diameter, and self-sealed with a strip of clear ultraviolet and chemical resistant plastic film. Coiled markers shall seal to themselves, and not the pipe surface.

D. Pipe Labels for pipe O.D. up to 10 inches: Shall be labeled with a single piece, pre-printed marker that wraps entirely around the circumference of the pipe, overlaps and seals to itself rather than adhere to the pipe surface.

E. Pipe Labels for pipe O.D. 10 inches and greater: Shall be constructed of printed 5 mil polyester and top laminated with clear ultraviolet and chemical resistant plastic film that is pre-applied to an acrylic-faced, co-extruded ABS plastic carrier. Carrier shall have pre-formed legs running the entire length of the part to ensure marker remains straight and aligned with pipe. Flow direction shall be identified by application of a separate arrow label of same construction. Carriers shall be affixed to piping by means of two (2) stainless steel straps that wrap entirely around the circumference of the pipe.

F. Underground Plastic Pipe markers: Bright colored continuously printed plastic ribbon tape, minimum 6 inches wide by 4 mil thick, manufactured for direct burial service.

2.09 CEILING TACKS

A. Description: Steel with 3/4 inch or 7/8" diameter color coded head.

B. Color code: Red.

2.10 CEILING GRID TAG FOR EQUIPMENT LOCATED ABOVE LAY-IN CEILING

A. Description: 3/4" x variable length vinyl label, 3.0 mil self-adhesive vinyl similar to Graphic Products, Inc. DuraLabel Pro™. Label color shall be black text on a white background.

B. All scheduled equipment above finish lay-in ceiling shall be identified with an Equipment Tag.

C. All ceiling grid tags shall be installed prior to the ceiling cover inspection.

2.11 WARNING SIGNS AND LABELS

A. Material and Thickness: Multilayer, multicolor, plastic labels for mechanical engraving, 1/8 inch thick, and having predrilled holes for attachment hardware.

B. Letter Color: White.

C. Background Color: Red.

D. Maximum Temperature: Able to withstand temperatures up to 160 deg F.

E. Minimum Label Size: Length and width vary for required label content, but not less than 2-1/2 by 3/4 inch.

F. Minimum Letter Size: 1/4 inch for name of units if viewing distance is less than 24 inches, 1/2 inch for viewing distances up to 72 inches, and proportionately larger lettering for greater viewing distances. Include secondary lettering two-thirds (2/3) to three-fourths (3/4) the size of principal lettering.

G. Fasteners: Stainless-steel self-tapping screws.

H. Label Content: Include caution and warning information, plus emergency notification instructions.

2.12 WARNING TAGS

A. Material: Reprinted or partially preprinted, accident-prevention tags; of plasticized card stock with matte finish suitable for writing.

B. Size: 3 by 5-1/4 inches minimum.

C. Fasteners: Brass grommet and wire.

D. Nomenclature: Large-size primary caption such as DANGER, CAUTION, or DO NOT OPERATE.

E. Color: Yellow background with black lettering.

PART 3 - EXECUTION

3.01 EXAMINATION

A. Do not begin installation until substrates have been properly prepared.

B. Install identifying devices after completion of coverings and painting.

C. If substrate preparation is the responsibility of another installer, notify Architect of unsatisfactory preparation before proceeding.

3.02 PREPARATION

A. Clean piping and equipment surfaces of substances that could impair bond of identification devices, including dirt, oil, grease, release agents, and incompatible primers, paints, and encapsulates.

B. For pipe markers that are pre-coiled or strap-on type and do not adhere directly to the piping, no surface preparation is necessary.

3.03 INSTALLATION

A. Installation shall meet or exceed all applicable federal, state and local requirements, referenced standards and conform to codes and ordinances of authorities having jurisdiction.

B. All installation shall be in accordance with manufacturer's published recommendations.

3.04 EQUIPMENT LABEL INSTALLATION

A. Install or permanently fasten labels on each major item of fire suppression equipment.

B. Locate equipment labels where accessible and visible.

3.05 ACCESS PANEL AND DOOR MARKERS INSTALLATION

A. Install or permanently fasten markers on access panels and door for fire suppression equipment.

B. Locate labels where accessible and visible.

3.06 VALVE TAGS INSTALLATION

A. Contractor(s) shall provide and install valve tags on all valves installed within this Project, except check valves and valves within factory-fabricated equipment units..

B. List tagged valves in a valve schedule.

3.07 PIPE LABEL INSTALLATION

A. Piping runs throughout the Project including those above lift-out ceilings, underfloor and those exposed to view when access doors or access panels are opened shall be identified by means of pipe markers. Concealed areas, for purposes of this identification section, are those areas that cannot be seen except by demolition of the building elements. In addition to pipe markers, arrow markers shall be used to indicate direction of flow.

B. As a minimum, locate pipe markers as follows:

1. Provide a pipe marker at each valve to indicate proper identification of pipe contents. Where several valves exist on one (1) header, it is necessary to mark only the header.

2. Every 20 feet in exposed and concealed areas on all piping systems. Provide at least one (1) pipe marker in each room on all piping systems.

3. At each branch or riser takeoff on piping systems.

4. Provide a pipe marker and an arrow marker at every point of pipe entry or exit where the pipe penetrates a wall, floor, service column or enclosure.

5. At access doors, manholes and similar access points that permit view of concealed piping.

6. Near major equipment items and other points of origination and termination.

7. On piping above removable acoustical ceilings. Omit intermediately spaced labels.

C. Provide an arrow marker with each pipe marker pointing away from the pipe marker to indicate direction of flow.

D. Provide a double-ended arrow marker when flow can be in either or both directions.

E. Install plastic tape, and pipe markers completely around pipe in accordance with manufacturer’s instructions.

F. Locate markers on the two (2) lower quarters of the pipe where view is unobstructed.

G. Install underground plastic pipe markers 6 to 8 inches below finished grade, directly above buried pipe.

3.08 WARNING TAGS INSTALLATION

A. Write required message on, and attach warning tags to, equipment and other items where required.

3.09 CEILING TACKS INSTALLATION

A. Mark location of equipment or valves located above ceilings with identifying "buttons" to help in identification for maintenance.

3.10 CEILING GRID TAGS INSTALLATION

A. Provide ceiling grid tags to locate valves or other concealed equipment above T-bar type panel ceilings. Locate in corner of grid closest to equipment.

3.11 PROTECTION

A. Protect installed products until completion of project.

B. Touch-up, repair or replace damaged products before Substantial Completion.

END OF SECTION 21 05 53

THIS PAGE WAS LEFT BLANK INTENTIONALLY

21 08 00

COMMISSIONING OF FIRE PROTECTION SYSTEMS

PART 1 - GENERAL

1.01 SUMMARY

A. This Section includes commissioning process requirements for Fire Protection systems, assemblies, controls, and equipment.

B. This project will have selected building systems commissioned. The equipment and systems to be commissioned are specified “SECTION 01 91 00 - GENERAL COMMISSIONING REQUIREMENTS”.

C. The scope of commissioning shall include the third party inspections, site verification of entire system, witness and verification of the “material and test certificates”

1.02 RELATED SECTIONS

A. SECTION 01 91 00 - COMMISSIONING GENERAL REQUIREMENTS

B. SECTION 22 08 00 – COMMISSIONING OF PLUMBING SYSTEMS

C. SECTION 23 08 00 – COMMISSIONING OF HVAC SYSTEMS

D. SECTION 26 08 00 – COMMISSIONING OF ELECTRICAL SYSTEMS

E. SECTION 28 08 00 – COMMISSIONING OF FIRE ALARM SYSTEMS

1.03 DEFINITIONS

A. Refer to section 01 91 00 - GENERAL COMMISSIONING REQUIREMENTS

1.04 SUBMITTALS

A. Certificate of Readiness, signed by the Contractor, certifying that systems, assemblies, equipment, components, and associated controls are ready for testing.

B. Manufacturer’s completed start-up reports for equipment and systems.

1.05 CONTRACTOR'S RESPONSIBILITIES

A. Reference Project Specification Section 01 91 00 GENERAL COMMISSIONING REQUIREMENTS for details of contractor’s responsibilities related to commissioning.

B. Perform commissioning tests at the direction of the CxA.

C. Attend commissioning meetings.

D. Provide information requested by the CxA for functional testing and for final commissioning documentation.

E. Provide measuring instruments and logging devices to record test data, and provide data acquisition equipment to record data for the complete range of testing for the required test period.

F. Functional testing of systems will be carried out solely by contractor’s personnel, under the direction of CxA. Provide experienced personnel, familiar with the systems being installed under this project.

1.06 CXA'S RESPONSIBILITIES

A. Reference Project Specification Section 01 91 00 GENERAL COMMISSIONING REQUIREMENTS.

B. CxA will direct commissioning testing. Commissioning provider shall coordinate and provide, licensed, third party inspection prior to final payment. Inspection to include flow test and overhead inspection.

PART 2 - PRODUCTS (NOT USED)

PART 3 - EXECUTION

3.01 GENERAL TESTING REQUIREMENTS

A. Equipment Testing and Acceptance Procedures: Testing requirements are specified in Division 21 Sections. Provide submittals, test data, inspector record, and certification to the CxA.

B. Reference Project Specification Section 01 91 00 GENERAL COMMISSIONING REQUIREMENTS for detailed requirements of commissioning of Mechanical systems.

C. Provide technicians, instrumentation, and tools to perform commissioning test at the direction of the CxA.

D. Test all operating modes, interlocks, control responses, and responses to abnormal or emergency conditions, and verify proper response of building automation system controllers and sensors.

E. Tests will be performed using design conditions whenever possible.

3.02 SYSTEM START-UP

A. Contractor is solely responsible for system start-up. CxA may, at his discretion, witness start up procedures, but will not perform any Functional Testing of systems until Contractor has completed start-up and resolved all operating deficiencies, and has so certified.

3.03 TESTING PREPARATION

A. Certify that Fire Protection systems, subsystems, and equipment have been installed, calibrated, and started and are operating according to the Contract Documents.

B. Certify that testing, adjusting, and balancing procedures for Fire Protection systems have been completed and submitted, discrepancies corrected, and corrective work approved.

C. Set systems, subsystems, and equipment into operating mode to be tested (e.g., normal shutdown, normal auto position, normal manual position, unoccupied cycle, emergency power, and alarm conditions).

D. Inspect and verify the position of each device and interlock identified on checklists.

E. Check safety cutouts, alarms, and interlocks with life-safety systems during each mode of operation.

3.04 FUNCTIONAL TESTING / GENERAL

A. Reference Project Specification Section 01 91 00 GENERAL COMMISSIONING REQUIREMENTS for detailed requirements of commissioning of Plumbing systems.

B. Provide measuring instruments to record test data as directed by the CxA.

3.05 PIPING SYSTEMS

A. Pipe system cleaning, flushing, hydrostatic tests, and chemical treatment requirements are specified in Division 22 piping Sections. Plumbing Contractor shall prepare a pipe system cleaning, flushing, and hydrostatic testing plan. Provide cleaning, flushing, testing, and treating plan and final reports to the CxA. Include sequence of testing and testing procedures, description of equipment for flushing operations, drawings for each pipe sector, showing the physical location of each designated pipe test section, minimum flushing water velocity, and chemical treatment plan.

3.06 DEFERRED TESTING

A. Initial commissioning will be done as soon as contract work is completed, though building may not be at full occupancy and equipment may not be at full loading.

B. If adequate load may be artificially placed upon heating or cooling equipment, CxA, at his discretion, may perform functional testing during non-peak load periods. If testing cannot be carried out under these conditions to adequately verify system performance, testing will be deferred until such time as conditions are more satisfactory.

1. Contractor is to provide services of personnel and participate in deferred or seasonal testing process in the same manner as he would in non-seasonal testing.

2. If tests cannot be completed because of a deficiency outside the scope of the Plumbing system, document the deficiency and report it to the Owner. After deficiencies are resolved, reschedule tests.

3.07 RE-TESTING

A. Reference Project Specification Section 01 91 00 GENERAL COMMISSIONING REQUIREMENTS for detailed requirements of re-testing of Plumbing systems.

3.08 SYSTEMS TO BE COMMISSIONED

A. Reference Project Specification Section 01 91 00 COMMISSIONING GENERAL REQUIREMENTS for list of Fire Protection systems to be commissioned.

END OF SECTION 21 08 00

THIS PAGE WAS LEFT BLANK INTENTIONALLY

21 10 00

WATER BASED FIRE SUPPRESSION SYSTEMS

PART 1 - GENERAL

1.01 SCOPE

A. The Contractor shall provide all components required for the complete installation of automatic sprinkler systems as hereinafter specified and indicated on the Drawings.

B. System Layout: The fire sprinkler areas, piping, head locations, etc. as indicated is only for Contractor's reference as to areas to be protected and possible piping routes. If header or manifold sizes are given in the drawings, then the sizes given shall be the minimum sizes installed. Actual number, spacing and location of heads, size and routes of piping shall be provided in accordance with the applicable Specifications and acceptable Shop Drawings. All layouts, head spacing, coverage, etc., as may be required by the referenced authorities and/or Architectural and Structural conditions shall be made without increase in cost to the Owner or the Architect/Engineer. Modifications to head spacing, pipe routes, etc. shall be closely coordinated with the work of all other trades. The Fire Sprinkler Subcontractor shall be responsible for the design and installation of the fire sprinkler system as described herein and on the project drawings. The piping of the system shall be sized used the "hydraulic" method, as included in NFPA Standard No. 13. Piping sized using the "schedule" method is unacceptable.

1.02 THE FOLLOWING SECTIONS ARE TO BE INCLUDED AS IF WRITTEN HEREIN:

A. Section 21 00 00 – General Requirements for Fire Suppression

B. Section 21 05 29 – Fire Protection Supports and Sleeves

C. Section 21 05 53 – Fire Protection Piping and Equipment Identification

1.03 SECTION INCLUDES

A. Pipe, fittings, valves, and connections for sprinkler system.

1.04 RELATED SECTIONS

A. Section 31 23 16.13 – Trenching

B. Section 09 91 00 - Painting

1.05 REFERENCES

A. ANSI/ASME B16.1 - Cast Iron Pipe Flanges and Flanged Fittings, Class 25, 125, 250, and 800.

B. ANSI/ASME B16.3 - Malleable Iron Threaded Fittings, Class 150 and 300.

C. ANSI/ASME B16.4 - Cast Iron Threaded Fittings, Class 125 and 250.

D. ANSI/ASME B16.5 - Pipe Flanges and Flanged Fittings.

E. ANSI/ASME B16.9 - Factory-made Wrought Steel Buttwelding Fittings.

F. ANSI/ASME B16.11 - Forged Steel Fittings, Socket-welding and Threaded.

G. ANSI/ASME B16.25 - Buttwelding Ends.

H. ANSI/ASME B36.10 - Welded and Seamless Wrought Steel Pipe.

I. ANSI/ASME Boiler and Pressure Vessel Code (BPVC), Sec IX - Welding and Brazing Qualifications.

J. ANSI/ASTM A135 - Electric-Resistance-Welded Steel Pipe.

K. ANSI/ASTM A47 - Malleable Iron Castings.

L. ANSI/ASTM B32 - Solder Metal.

M. ANSI/AWS A5.8 - Brazing Filler Metal.

N. ANSI/AWWA C110 - Ductile Iron and Gray Iron Fittings.

O. ANSI/AWWA C151 - Ductile Iron Pipe, Centrifugally Cast.

P. ASTM A53 - Pipe, Steel, Black and Hot-Dipped, Zinc-coated Welded and Seamless.

Q. ASTM A120 - Pipe, Steel, Black and Hot-Dipped, Zinc-coated (Galvanized) Welded and Seamless, for Ordinary Uses.

R. ASTM A234 - Piping Fittings of Wrought Carbon Steel and Alloy Steel for Moderate and Elevated Temperatures.

S. ASTM A795 - Black and Hot-Dipped Zinc-Coated (Galvanized) Welded and Seamless Steel Pipe for Fire Protection Use.

T. AWS D10.9 - Specifications for Qualification of Welding Procedures and Welders for Piping and Tubing.

U. IFC - International Fire Code, 2015 edition with City of Stafford, Texas amendments.

V. NFPA 13 - Installation of Sprinkler Systems, 2013 edition.

W. NFPA 24 - Installation of Private Fire Service Mains and Their Appurtenances

X. NFPA 51B - Standard for Fire Prevention During Welding, Cutting, and Other Hot Work.

Y. UL - Fire Protection Equipment Directory.

Z. City of Stafford, Texas, Fire Department Standards.

AA. State of Texas, State Fire Marshal Rules.

BB. All hose threads, coupling types, etc., utilized in the fire protection systems shall conform to the standards and requirements of the City of Stafford, Texas Fire Department.

1.06 SUBMITTALS

A. Submit under provisions of Section 21 00 00.

B. Shop Drawings:

1. Prior to detailed submission, submit preliminary layout showing head locations within coordinated ceiling grid and inspector's test station locations for review by Architect/Engineer.

2. Submit shop drawings and obtain approval from all authorities prior to material purchasing, fabrication of any piping or installation of any components of the fire protection systems. Include detailed plans showing all piping, elevations of piping above finished floors, pipe sizes, hangers, supports, sprinkler heads, valves, siamese connections, concrete thrust block details, inspector’s test locations, system drains, etc. Indicate pipe materials used, jointing methods, supports, floor and wall penetration seals. Indicate installation, layout, weights, mounting and support details, and piping connections.

3. Hydraulic calculations: Submit flow test results and comprehensive hydraulic data sheets complying with NFPA 13. Verification of the adequacy of water pressure and other pertinent water supply data shall be the responsibility of the design engineer.

4. Sprinkler heads shall be shown on Drawings and specifically identified by the style or series designation as published in the appropriate agency listing or approval.

5. Design systems under direct supervision of a Professional Engineer experienced in design of this work and licensed in the State of Texas. All design submittal documents and shop drawings, including drawings and hydraulic calculations, shall bear the Responsible Engineer’s signed and dated seal. Include all costs for obtaining approval from a Professional Engineer licensed in the State of Texas.

C. Product Data: Provide data on pipe materials, pipe fittings, sprinkler heads, valves, fire hose cabinets, flow switches, tamper switches, all other components and accessories. , Include manufacturer’s catalogue information, code and standards compliance, performance ratings rough-in details, weights, support requirements, and piping connections.

D. Samples: Submit one (1) of each style of sprinkler head specified.

E. Manufacturer's Certificate: Certify that system has been tested and meets or exceeds requirements specified, and suggested by listed codes.

F. Certification of Installation: Provide a letter of certification stating that the installed and tested fire protection systems comply with the requirements of NFPA. The certification letter is to be authored, sealed, dated and signed by a licensed Fire Protection Engineer experienced in design and installation of this work and licensed in the state of Texas. Include all costs for obtaining approval from the licensed Fire Protection Engineer.

G. Provide certificate of compliance from authority have jurisdiction indicating approval of field acceptance tests.

H. Project Record Documents

1. Submit under provisions of Section 21 00 00.

2. Record actual locations of sprinkler heads and deviations of piping from drawings. Indicate drain and test locations.

1.07 OPERATION AND MAINTENANCE DATA

A. Submit under provisions of Section 21 00 00.

B. Maintenance Instructions: Include installation instructions, spare parts lists, procedures, and treatment programs.

1.08 QUALITY ASSURANCE

A. Sprinkler Systems: Perform work to NFPA 13.

B. Welding Materials and Procedures: Perform to ASME BPVC, Section IX.

C. Equipment and Components: Bear FM label or marking. Provide manufacturer's name and pressure rating marked on valve body.

D. Maintain one (1) copy of each document on site.

E. Qualifications of the Installer: The system shall be installed by a firm regularly engaged in the design and installation of automatic sprinkler systems in accordance with requirements of the National Fire Protection Association and Fire Protection and the Texas Department of Insurance Fire Sprinkler Rules, or by an authorized agent of such firm. Evidence to support the above requirements may be required and any proposed installer who cannot show suitable experience will be rejected.

F. Design system under direct supervision of a Professional Engineer experienced in design of this work and licensed in the State of Texas. All design submittal documents and shop drawings shall bear the Responsible Engineer’s signed and dated seal.

G. All parts of fire protection piping systems shall conform to all provisions of Underwriters' Laboratories requirements. All equipment shall bear the Underwriters' Laboratories label of approval.

H. Determine volume and pressure of incoming water supply from residual pressure water flow test.

1.09 DELIVERY, STORAGE, AND HANDLING

A. All materials shall be new, undamaged, and free of rust.

B. Deliver, store, protect, and handle products to site under provisions of Section 21 00 00.

C. Deliver and store valves in shipping containers with labeling in place.

D. Inspect shipments for possible damage during transit. Do not use damaged materials in any part of the system.

E. Provide temporary protective coating on cast iron and steel valves. fittings and valves not packaged within containers. Maintain in place until installation.

F. Protect all materials that are to be installed within this Project from exposure to rain, freezing temperatures and direct sunlight. EXCEPTION: Materials manufactured for exterior locations.

G. Provide temporary end caps and closures on piping and fittings. Maintain in place until installation.

1.10 EXTRA MATERIALS

A. Furnish under provisions of Section 21 00 00.

B. The Contractor shall provide spare heads equal to one percent (1%) of the total number of heads installed under the Contract, but not less than ten (10).

C. The heads shall be packed in a suitable wall mounted metal storage cabinet and shall be representative of, and in proportion to, the number of each type and temperature rating heads installed. The cabinet shall be located where directed by the Construction Inspector.

D. In addition to the spare heads, the Contractor shall provide not less than one (1) special sprinkler head wrench for each type of head.

1.11 WARRANTY

A. The complete system shall be warranted in writing against defects in materials or Workmanship under normal use and service for a period of one (1) year after date of Substantial Completion.

PART 2 - PRODUCTS

2.01 GENERAL

A. All materials shall meet or exceed all applicable referenced standards, federal, state and local requirements, and conform to codes and ordinances of authorities having jurisdiction.

B. All piping, materials and equipment used in the installation of sprinkler system shall be new and listed as approved by the Underwriters' Laboratories, Inc., List of Inspected Fire Protection Equipment and Materials and the Factory Mutual Testing Laboratories List of Approved Equipment, Fire Protection Devices and Devices Involving Fire Hazard and shall be the latest design of the manufacturer.

C. Pressure ratings of pipe, fittings, valves, gauges and all other water carrying appurtenances shall be suitable for the anticipated system pressures in which they are installed.

D. The installing Contractor shall identify piping, fire department connections, valves and hydraulic design information in accordance with applicable NFPA Standards.

2.02 UNIONS

A. Provide and install unions at proper points to permit removal of pipe and various equipment and machinery items without injury to other parts of the system. No unions will be required in welded lines. Unions 2 inch and smaller shall be Class 300 AAR threaded malleable iron unions with iron to brass seats, and 2-1/2 inch and larger shall be ground flange unions. Companion flanges on lines at various items for equipment machines and pieces of apparatus shall serve as unions to permit removal of the particular items.

2.03 FLANGES

A. All 150 lb. and 300 lb. ANSI flanges shall be weld neck and shall be domestically manufactured, forged carbon steel, conforming to ANSI B16.5 and ASTM A181 Grade I or II or A105-71 as made by Tube Turns or Hackney-Ladish Company. Slip on flanges shall not be used. Each fitting shall be stamped as specified by ANSI B16.9 and, in addition, shall have the laboratory control number stenciled on each fitting for ready reference as to physical properties and chemical composition of the material. Complete test reports may be required for any fitting selected at random.

B. Flanges which have been machined, remarked, painted or otherwise produced domestically from imported forges will not be acceptable. Flanges shall have the manufacturer's trademark permanently identified in accordance with MSS SP-25. Contractor shall submit data for firm certifying compliance with these Specifications.

C. Bolts used shall be carbon steel bolts with semi-finished hexagon nuts of American Standard Heavy dimensions. All thread rods will not be an acceptable for flange bolts.

D. Flat faced flanges shall be furnished to match 125 lb cast iron flanges on pumps, check valves, strainers, etc. with full flange gaskets. Bolting of raised face flanges to flat faced flanges is not allowed.

2.04 FLANGE GASKETS

A. Gaskets shall be placed between the flanges of all flanged joints.

B. Gaskets shall be ring form gaskets fitting within the bolt circle of their respective flanges. Gaskets shall be 1/16" thick asbestos free material recommended for service by Anchor Seals, Garlock, or John Crane. The inside diameter of such gaskets shall conform to the nominal pipe size and the outside diameter shall be such that the gasket extends outward to the studs or bolts employed in the flanged joint.

C. Spares: Contractor shall provide ten (10) spare gaskets for every flange size and rating.

2.05 WALL, FLOOR AND CEILING PLATES

A. See Section 21 00 00.

2.06 SLEEVES, INSERTS, AND FASTENINGS

A. General: All openings through all floors, walls, and roofs, etc., regardless of material for the passage of piping, etc., shall be sleeved. Refer to Specification Section 21 05 29.

2.07 UNDERGROUND FIRE PROTECTION PIPING

A. Acceptable Manufacturers: Pipe and joints shall be as manufactured in the United States by American Cast Iron Pipe Company, Tyler Pipe (a Division of McWane), U.S. Pipe Company, McWane Cast Iron Pipe Company, or Engineer accepted equivalent.

Commented [c1]: http://www.tylerpipe.com/

Commented [c2]: http://www.clowvalve.com/communications/news-articles/mcwane-ductile-iron-pipe-companies-unite-uner-one-name/

B. Pipe

1. ANSI A21.50 (AWWA C150) and ANSI A21.51 (AWWA C151) cement mortar lined ductile iron, supplied in 16 ft. laying lengths.

2. Thickness

a. Piping 4" and Smaller: Class 51.

b. Piping 6" and Larger: Class 50.

C. Fittings

1. Class 250 AWWA C110, cement mortar lined, ductile or gray iron, standard thickness.

2. Tappings in ductile iron pipe shall be made with dual compression seal tapping sleeve, similar and Architect/Engineer accepted equivalent to U.S. Pipe Model T-28.

3. Joints

4. Ductile Iron Pipe to Ductile Iron Pipe: Unless noted otherwise on the Drawings, all joints shall be restrained mechanical joints.

5. Ductile Iron Pipe to Steel Iron Pipe: ANSI/AWWA C110 flanged fittings adequate for 250 psi working pressure. Provide with dielectric flange insulating kit with insulating sleeves and washers for each bolt.

6. Pipe to Valve: ANSI/AWWA C110 flanged fittings adequate for 250 psi working pressure.

7. Bolts: High strength, Type 316 stainless steel tee head bolts with hexagon nuts.

8. Gaskets: ANSI A21.11 / AWWA C111 ethylene propylene diene monomer (EPDM) suitable for 220°F.

D. Coating: Pipe and fittings shall be cement mortar lined. Coat pipe and fittings outside with the manufacturer's standard asphaltic sealcoat in accordance with the latest revision of ANSI Standard A21.4 (AWWA C104) suitable for domestic water service.

E. Casing: Unless otherwise noted on the Drawings, all ductile iron pipe, fittings, etc., shall be encased in 8 mils thick polyethylene tubing in accordance with the latest revision of ANSI Standard A21.5 (AWWA C105).

F. Ductile iron piping, fittings, and joints shall be suitable for the minimum working pressure and sizes indicated on the Drawings, in Type 4 laying conditions with 2 to 15 feet of cover, and as required for freeze protection, unless otherwise indicated on the Drawings.

2.08 ABOVE GROUND FIRE PROTECTION PIPING

A. All pipe used for fire protection fire sprinkler systems shall be Schedule 40 black steel pipe conforming to ASTM A795 or ASTM A53. All piping 2-1/2" and larger shall be welded, unless otherwise indicated herein.

B. Use of mechanically coupled grooved piping, when approved by Stafford MSD, shall be “roll” grooved type; cut grooved pipe is not permitted.

C. Schedule 10 and “thin wall” fire sprinkler pipe is not permitted.

D. Fittings:

1. Piping 2" and Smaller: Class 150 malleable iron threaded fittings conforming to ASME B16.3.

2. Piping 2-1/2" and Larger: Welding type steel fittings conforming to ASTM A234 and ANSI B16.9. In lieu if welding type fittings, grooved type fittings may be used on sprinkler systems. Pipe size changes shall be performed through the use of reducing tees or reducers designed for that purpose. The use of bushings is explicitly prohibited.

3. Grooved end couplings 2-1/2" and larger shall be Victaulic Style 07 “Zero-Flex” Rigid Coupling, with EPDM gasket (minimum 700 psi working pressure) for use with roll grooved piping. Products by Victaulic and Anvil are acceptable, or Engineer-approved equal. Reducing type couplings, outlet couplings, “T” outlet fittings, cut-in style fittings, snap joint couplings, and flange adapter type fittings are not acceptable. Provide grooved fittings similar to standard weld fittings.

4. Extra heavy "Thread-o-lets" shall be used at each point of departure from the riser to the fire hose or valve cabinet. A "Thread-o-let" shall be installed below the level of the valve in the cabinet and a minimum of two (2) threaded ells shall be used to provide a swing joint connection from the riser to the valve in the cabinet.

2.09 VALVES

A. General:

1. All shutoff valves shall be UL listed and FM approved for fire protection service.

2. Similar types of valves shall be the product of one manufacturer; i.e., all butterfly valves shall be of the same manufacture, all ball valves shall be of the same manufacture, etc.

3. All valves used to control the flow of water to and within sprinkler systems shall be listed indicating type complete with electric supervisory switches. Coordinate wiring with the Electrical Contractor.

B. Shutoff valves for sizes 2 inch and smaller:

1. Two (2) piece bronze ball valve, bubble-tight shutoff, full port, blow-out proof stem, chrome plated brass ball and silicon bronze stem, threaded end connections, conforming to MSS SP-110.

2. One (1) piece, butterfly valve, full port, threaded ends, bronze housing and body, stainless steel disc. EPDM disc seal and slow closing.

3. All valves shall be furnished with two (2) factory mounted internal supervisory switches.

C. Shut off valves for sizes over 2 inch:

1. Butterfly valves lug type with EPDM molded in seat liner, ductile iron disc, stainless steel stem, manual gear operator, conforms to MSS SP-67 and MSS SP-25, with integral supervisory switch. Where a grooved piping system is allowed, grooved end type butterfly valves may be used, consisting of ductile iron body and disc EPDM seats, stainless steel stem. Valves shall be equipped with internal supervisory switch.

2. Gate valves – OS&Y (Outside Yoke and Stem) resilient wedge, epoxy coated interior and exterior, ASTM A536 ductile iron valve body, bonnet and resilient wedge, ASTM B150 stem and flanged ends.

D. Check valves for sizes 2 inch and smaller:

1. Horizontal swing, bronze body, conforming to MSS SP-80, threaded ends and rubber disc.

E. Check valves for sizes over 2 inch:

1. Iron body swing-check, bronze disc, seat ring and hinge pin, UL listed and FM approved, flanged ends, renewable seats and disc, tapped 3/4 inch for ball drip assembly.

F. Standard of Quality for Fire Protection Valves:

Size	Type	Class	Manufacturer
2" and Smaller	Ball	300	Nibco No. KT-505-W-8, Stockham No. T-255-FB-P-UL
2" and Smaller	Butterfly	175	Milwaukee No. BB-SC02
2-1/2" and Larger	Butterfly (lug)	250	Nibco No. LD3510-8
2-1/2" and Larger	Butterfly (grooved)	300	Nibco No. GD-4765-8N

Size	Type	Class	Manufacturer
2 " and Smaller	Check	200	Nibco No. KT-403-W
2-1/2" and Larger	Check	175	Nibco No. F-908-W
2-1/2" and Larger	Check (grooved)	250	Nibco No. G-917 W

2.10 WET PIPE FIRE SPRINKLER SYSTEM

A. System Description:

1. System to provide coverage for entire building.

2. Provide system to the NFPA 13 occupancy requirements listed below, unless otherwise noted. Refer to "FP" drawings for locations of design densities of specific rooms and areas.

Location	System Type/Hazard
Administrative and Meeting Rooms	Light Hazard
Mechanical Equipment Rooms	Ordinary Hazard, Group 1
Electrical Equipment Rooms	Ordinary Hazard, Group 1
General Storage Areas	Ordinary Hazard, Group 1

3. Interface system with building fire and smoke alarm system.

4. Systems subject to freezing shall utilize antifreeze liquid. **DRY PIPE SYSTEMS ARE NOT ALLOWED**.

2.11 SPRINKLER HEADS

A. Acceptable Manufacturers: Victaulic, Grinnell (Tyco), Viking, Star or Reliable.

B. Suspended Ceilings and Gypsum Board or Plaster Ceilings:

1. Type: Concealed pendant type, flexible concealed pendant, quick response.

a. Finish: Factory finished (no field painting) cover plate, color to match ceiling finish. Exception: Provide chrome plated or alternate color cover plates where directed by Architect.

b. Flexible sprinklers are permitted only in drop ceilings. Flexible sprinkler piping shall have UL-listed braided, angular corrugated flexible sprinkler hose. Hose shall have a minimum 2 in. bend radius and hose shall not have any bend connection restrictions without affecting hydraulics and safety of the material.

2. Escutcheon Plate Finish: Standard white or chrome plated as selected by Architect.

3. Operating Element: Fusible solder link or glass bulb type temperature rated for specific area hazard.

4. Model: Sprinklers manufactured by Reliable, Victaulic or approved equal.

C. Exposed Area Type (for areas such as mechanical rooms, electrical rooms, etc.):

1. Type: Standard upright or pendent type with guard, quick response.

2. Head Finish:

a. Conditioned spaces: Bronze.

b. Non-conditioned Spaces/Exterior: Corrosion resistant material (i.e. PTFE or Electroless Nickel PTFE).

3. Operating Element: Fusible solder link or glass bulb type temperature rated for specific area hazard.

4. Model: GFR with appropriate wire guard as manufactured by Reliable or approved equal.

D. Extended coverage sprinkler heads are not to be used.

E. Sprinkler heads in elevator hoistways and elevator equipment rooms to be 200 degree F rated.

F. Use only quick response sprinkler heads.

G. Cold Rooms (≤ 42°F) and Areas Below Heated Ceiling/Soffit Spaces Susceptible to Freezing: Provide dry pendant type with chrome finish and two-piece escutcheon. (Areas include but not limited to; walk-in freezers, exterior overhangs, canopies.)

H. Elevator Equipment Rooms: Provide 212°F intermediate temperature classified heads.

I. Water Alarm:

1. A water motor alarm shall be connected to each alarm valve and shall discharge to a brass alarm gong located on the exterior of the building as directed by the Architect. Alarm gong finish to be selected by the Architect.

2. The alarm valves shall be Underwriters' Laboratories approved, wet type, connected to water supply and indicated on the Shop Drawings. Each alarm valve shall be provided with a circuit closer. Valves shall conform to the equipment of NFPA 13, complete with retarding chamber and pressure switch.

J. Water Flow Alarm Switch:

1. Provide, where indicated on the Drawings, McDonnell UL approved line size flow switches.

2. Flow switch shall be provided with delay, adjustable up to 90 seconds (60 to 90 seconds in Austin). See Division 26 for electrical signal connection by others to these flow switches.

2.12 FIRE DEPARTMENT SIAMESE CONNECTIONS

A. At the points designated on the accompanying Drawings, install Siamese fittings required for fire protection purposes. From a point on the incoming water supply line, the Contractor shall extend water line for fire protection purposes to Siamese connections.

B. Provide 2-way wall type Siamese connection equal to Potter Roemer No. 5750 series double clapper flush type Siamese connections with 2-1/2″ outlets having threads complying with the requirements of the Fire Department of the City of Stafford, Texas. They shall have proper caps with pin type lugs attached to the body of the Siamese connections with substantial chains. The plate fitting against the building shall have raised letters reading "AUTOMATIC SPRINKLER". All external surfaces shall be chromium plated polished surfaces or as directed by Architect.

C. Provide 2 way free standing type Siamese shall be equal to Potter-Romer No. 5760 series cast brass body with 2-1/2" outlets and escutcheon. They shall have proper caps with pin type lugs attached to the body of connection with substantial chains. "AUTOMATIC SPRINKLER" is to be cast on head of connection. All external surfaces shall be chromium plated polished surfaces or as directed by Architect.

D. Provide hose threads complying with the requirements of the local Fire Department.

E. Products manufactured by Potter Roemer, Elkhart Brass or Larsen’s will be acceptable.

PART 3 - EXECUTION

3.01 PREPARATION - ALL SYSTEMS

A. Ream pipe and tube ends. Remove burrs. Bevel plain end ferrous pipe.

B. Remove scale and foreign material, from inside and outside, before assembly.

C. Prepare piping connections to equipment with flanges or unions.

D. Flush entire system of foreign matter prior to installation of sprinkler heads.

3.02 INSTALLATION

A. Installation shall meet or exceed all applicable federal, state and local requirements, referenced standards and conform to codes and ordinances of authorities having jurisdiction.

B. Install all materials and products in accordance with manufacturer’s published recommendations. Use tools manufactured for the installation of the specific material or product.

C. Sprinkler Systems

1. Install piping in accordance with NFPA 13 for sprinkler systems and NFPA 24 for service mains. Note that the piping sizes indicated in the plans are the minimum acceptable. The Qualified Contractor shall provide proper sizes, materials and installation as required in the appropriate NFPA Standard.

2. Note that the use of piping bushings for any purpose is explicitly prohibited.

3. Route piping in orderly manner, plumb and parallel to building structure. Maintain gradient. See Sections 21 00 00 and 21 05 29 for additional requirements.

4. Slope piping and arrange systems to drain at low points. Use eccentric reducers to maintain top of pipe level.

5. Locate concealed valves, switches and alarm connections in accessible location, and coordinate size and location of access panels/doors with General Contractor.

6. Install valves with stems upright, not inverted. All valves shall be located such that the removal of their bonnets is possible. Valves placed in horizontal lines shall be installed with their valve stems inclined at an angle of a minimum of 30 degrees above the horizontal position. Valves shall be installed as nearly as possible to the locations indicated in the Construction Drawings. Any change in valve location must be so indicated on the Record Drawings. Remove protective coatings after installation.

7. Provide drain valves at main shut-off valves, low points of piping and apparatus. Provide Fire Department test station, piped to drain.

8. Locate outside alarm gong on building wall as indicated on the Drawings.

9. Place pipe runs to conserve building space, and to minimize obstructions with other work. Group piping whenever practical at common elevations. Coordinate closely with work of other trades to avoid conflicts and provide all required offsets, piping, auxiliary drains, etc. to properly install system.

10. Place piping in concealed spaces above finished ceilings. Run piping as high as possible, but a minimum of 12 inches above ceilings or proposed ceilings. Locate piping to avoid obstructing other work, including required service access to equipment furnished by other Divisions.

11. Heads shall be located in a symmetrical pattern related to ceiling features such as grid, beams, light fixtures, diffusers, etc., and where applicable, heads shall be located symmetrically with the ceiling grid, centered in two (2) directions.

12. Provide concealed sprinkler heads in ‘public’ areas such as corridors, student restrooms, commons, activity areas, locker rooms, etc. Apply paper cover to ensure concealed sprinkler head and cover plates do not receive field paint finish.

13. Provide semi-recessed sprinkler heads at classrooms, office and other staff occupied spaces.

14. Provide exposed sprinkler heads at all areas open to structure.

15. Provide wire guards on heads in all mechanical rooms, gymnasiums, and other areas where heads are subject to damage.

16. Sprinkler drop piping below ceiling configuration should be return bend (NFPA 13, Section 8.15.19) or flexible sprinkler drops shall be oriented such that the branch line connection is facing up.

17. Arm-overs greater than 24 inches shall be supported.

18. Install and connect fire pumps in accordance with Section 21 30 00 and NFPA 13.

19. Locate Fire Department Connection with sufficient clearance from walls, obstructions, or adjacent Siamese connectors to allow full swing of Fire Department wrench handle.

20. Inspector's test valves shall be installed for each sprinkler control valve assembly equipped with a flow switch and piped to an acceptable location as defined below. Design installation of inspector's test drain to accommodate the flow of discharge water under full flow conditions with pump running. The test drain is to be closed-pipe with a sight glass located to verify flow. Discharge piping to a remotely located sanitary drain, sump, or equivalent, in accordance with NFPA requirements and not requiring the addition of a hose to accommodate flow within the building. Locate test/drain valves and sight glasses inside stairwells, wherever practicable. Test drain shall not be piped to mop sinks.

21. All black steel piping shall be primed and painted red at factory/fabrication shop. Do not paint threads or fittings.

3.03 WELDED PIPING

A. Welding of pipe/fittings in normally occupied buildings is prohibited. Offsite welding is acceptable. Should welding be required in a normally occupied building for connecting to an existing welded system, obtain written approval from the Owner and comply with NFPA 51B.

B. All welding materials, procedures, qualifications and records shall comply with applicable NFPA requirements.

3.04 SYSTEM CLEANING AND FLUSHING

A. Cleaning, flushing and inspection shall be done in accordance with NFPA requirements.

B. The installing Contractor shall complete and sign the appropriate Contractor's Material and Test Certificates included within NFPA 13 and 14. Tests and signing of test certificates shall be witnessed by Owner's Construction Inspector or designee.

3.05 ZONING

A. All flow switches and tamper switches shall relay their activation to each annunciator panel and the main fire alarm panel.

B. Sprinkler system zoning shall coincide with building smoke compartmentalization unless noted otherwise on Contract Drawings. As a minimum, each floor level shall be a separate zone.

3.06 ACCEPTANCE TESTING

A. Pre-Acceptance Test: Prior to acceptance of the installation, subject the system to the test procedures as described by National Fire Protection Association Standards Nos. 13 and 24. Test pressures to be 200 psig minimum and are to be performed with all attached appurtenances. The duration of the test(s) to be a minimum of two (2) hours.

B. Acceptance Testing: AHJ requires 48 hours advance notice for this test. Upon completion of the installation, subject the system to the test procedures as described by National Fire Protection Association Standards Nos. 13 and 24 and provide the Owner with a Contractor's material and test certificate for aboveground or underground piping as required therein. Test pressures to be 200 psig minimum and are to be performed with all attached appurtenances. The duration of the test(s) to be a minimum of two (2) hours. Completely flush new piping system after completion of test. Prior to acceptance testing provide a set of complete shop drawings to verify installation.

3.07 SIGNAGE AND IDENTIFICATION POINTS

A. Install durable signage to indicate location of all shut-off and test valves. Locate signage in a commonly occupied/traveled location (e.g. hallway). Securely attach signage utilizing chains or other suitable methods. Provide signage with white letters and red background.

B. Install identification point signage for all hidden water flow switches. Identification tags to be white letters on a red background. Locate in areas visible from hallways.

3.08 TRAINING

A. Contractor shall provide for the service of a competent, trained and experienced agent to instruct and acquaint the Owner with the proper functioning, operation and maintenance of the fire protection systems and all installed components.

END OF SECTION 21 10 00

22 05 00

COMMON WORK RESULTS FOR PLUMBING

PART 1 - GENERAL

1.01 RELATED DOCUMENTS

A. Drawings and general provisions of the Contract, including General and Supplementary Conditions and Division 01 Specification Sections, apply to this Section.

B. Coordinate with Commissioning Requirements indicated in Section 019100. This contractor is responsible to comply with all requirements for the above section.

1.02 PLUMBING SYSTEM CRITERIA

A. Domestic hot water temperature shall be limited to 110^{o} F. except for water supplied to kitchen. Kitchens shall have a water supply temperature of 140^{o} F.

B. Gas piping on roofs shall be supported by manufactured free standing pipe supports.

C. Water and gas lines under drives and walkways shall be sleeved with schedule to PVC, at least two pipe sizes larger than the supply line.

D. The design of the roof drainage systems shall incorporate roof drains and overflows. The overflow system shall be piped independently and connected vertically to the roof drain down spout. The overflows shall be located in locations readily visible. (*Discharge overflow above grade if required by local Authority having jurisdiction).

E. Lavatories serving students shall have single, self closing faucets. Learning Center sinks shall have single faucets with goose necks. All sinks to include cold, tempered and hot water not to exceed 105

F. In each science learning center/wet lab, provide a red emergency shut off button to shutdown water, gas and electricity in event of an emergency. Locate this button in the teacher's workstation and away from exit door.

1.03 SUMMARY

A. Design a complete plumbing system including all sanitary, waste and vent piping, storm piping, gas piping and all equipment necessary for a complete system and in accordance with all local jurisdictions and codes.

B. All materials and distribution, and utilization equipment shall be UL Listed.

C. All equipment and materials shall be new, unused and of United States Domestic manufacture.

D. Provide hot and cold and tempered water isolation valves at every supply pipe to each restroom or restroom bank.

E. Isolation valves shall be accessible in all restrooms. The contractor shall provide a minimum of 2 feet accessible pipe chase for maintenance.

F. All cleanouts shall be accessible. Any room that has a plumbing fixture shall have an accessible isolation valve.

G. A record shall be kept of all permits and inspections and submitted to the Master Plumber. In addition, a list of all equipment and devices will be provided.

H. This Section includes the following:

1. Piping materials and installation instructions common to most piping systems.
2. Transition fittings.
3. Dielectric fittings.
4. Mechanical sleeve seals.
5. Sleeves.
6. Escutcheons.
7. Grout.
8. Equipment installation requirements common to equipment sections.
9. Painting and finishing.
10. Concrete bases.
11. Supports and anchorages.

I. Related Sections:

1. Section 013300 Submittals.
2. Section 01524 Construction Waste Management
3. Section 01352 LEED Requirements
4. Section 01611 Environmental Management
5. Section 01570 Pollution Prevention and Control

1.04 DEFINITIONS

A. Finished Spaces: Spaces other than mechanical and electrical equipment rooms, furred spaces, pipe chases, unheated spaces immediately below roof, spaces above ceilings, unexcavated spaces, crawlspaces, and tunnels.

B. Exposed, Interior Installations: Exposed to view indoors. Examples include finished occupied spaces and mechanical equipment rooms.

C. Exposed, Exterior Installations: Exposed to view outdoors or subject to outdoor ambient temperatures and weather conditions. Examples include rooftop locations.

D. Concealed, Interior Installations: Concealed from view and protected from physical contact by building occupants. Examples include above ceilings and in chases.

E. Concealed, Exterior Installations: Concealed from view and protected from weather conditions and physical contact by building occupants but subject to outdoor ambient temperatures. Examples include installations within unheated shelters.

F. The following are industry abbreviations for plastic materials:

1. ABS: Acrylonitrile-butadiene-styrene plastic.

2. CPVC: Chlorinated polyvinyl chloride plastic.

3. PE: Polyethylene plastic.

4. PVC: Polyvinyl chloride plastic.

G. The following are industry abbreviations for rubber materials:

1. EPDM: Ethylene-propylene-diene terpolymer rubber.

2. NBR: Acrylonitrile-butadiene rubber.

1.05 SUBMITTALS

A. Product Data: For the following:

1. Transition fittings.

2. Dielectric fittings.

3. Mechanical sleeve seals.

4. Escutcheons.

B. Welding certificates.

C. Product data. Unless otherwise indicated, submit the following for each type of product provided under work of this Section:

1. Recycled Content:

a. Indicate recycled content; indicate percentage of pre-consumer and post-consumer recycled content per unit of product.

2. Local/Regional Materials:

    a. Indicate location of manufacturing facility; indicate distance between manufacturing facility and the project site.

    b. Indicate location of extraction, harvesting, and recovery; indicate distance between extraction, harvesting, and recovery and the project site.

3. VOC data:

    a. Submit manufacturer's product data for joint compounds. Indicate VOC and chemical component limits of the product. Submit MSDS highlighting VOC and chemical component limits. VOC contents and chemical component limits must be less than the limits of Green Seal’s Standard GS-11.

    b. Submit manufacturer’s certification that products comply with Green Seal’s Standard GS-11

    c. Submit environmental data in accordance with Table 1 of ASTM E2129 for products provided under work of this Section.

4. Submit the following according to Conditions of the Construction Contract.

    a. Product data. Unless otherwise indicated, submit the following for each type of product provided under work of this Section:

5. General: Submit additional LEED submittal requirements included in other sections of the Specifications.

6. LEED submittals are in addition to other submittals. If submitted item is identical to that submitted to comply with other requirements, submit duplicate copies as a separate submittal to verify compliance with indicated LEED requirements.

1.06 QUALITY ASSURANCE

A. Steel Support Welding: Qualify processes and operators according to AWS D1.1, "Structural Welding Code--Steel."

B. Steel Pipe Welding: Qualify processes and operators according to ASME Boiler and Pressure Vessel Code: Section IX, "Welding and Brazing Qualifications."

    1. Comply with provisions in ASME B31 Series, "Code for Pressure Piping."

    2. Certify that each welder has passed AWS qualification tests for welding processes involved and that certification is current.

C. Electrical Characteristics for Plumbing Equipment: Equipment of higher electrical characteristics may be furnished provided such proposed equipment is approved in writing and connecting electrical services, circuit breakers, and conduit sizes are appropriately modified. If minimum energy ratings or efficiencies are specified, equipment shall comply with requirements.

1.07 DELIVERY, STORAGE, AND HANDLING

A. Deliver pipes and tubes with factory-applied end caps. Maintain end caps through shipping, storage, and handling to prevent pipe end damage and to prevent entrance of dirt, debris, and moisture.

B. Store plastic pipes protected from direct sunlight. Support to prevent sagging and bending.

1.08 COORDINATION

A. Arrange for pipe spaces, chases, slots, and openings in building structure during progress of construction, to allow for plumbing installations.

B. Coordinate installation of required supporting devices and set sleeves in poured-in-place concrete and other structural components as they are constructed.

C. Coordinate requirements for access panels and doors for plumbing items requiring access that are concealed behind finished surfaces. Access panels and doors are specified in Division 08 Section "Access Doors and Frames."

PART 2 - PRODUCTS

2.01 ENVIRONMENTALLY PREFERABLE PRODUCTS

A. Provide environmentally preferable products to the greatest extent possible.

1. To the greatest extent possible, provide products and materials that promote stewardship of the earth's resources, promote good indoor environmental quality (IEQ), and promote efficiencies in operational performance.

B. Provide products listed on the EPA Comprehensive Procurement Guidelines to the greatest extent practicable.

C. Provide products listed on the USGBC Directory of Products and Services to the greatest extent possible.

2.02 RECYCLED CONTENT

A. Provide recycled content products to the greatest extent possible.

1. To the greatest extent possible, provide materials with recycled content such that the sum of post-consumer recycled content plus one-half of the post-industrial content constitutes at least 10% of the total value of the materials in the project.

2.03 REGIONAL MATERIALS

A. Provide Regional materials and products to the greatest extent possible that are extracted and manufactured within the region.

1. Provide materials and products that use a minimum of 20 % of building products that are manufactured regionally within a radius of 500 miles from the project site.

a. Manufacturing refers to the final assembly of components into the building product that is furnished and installed by the tradesman.

2. Of the regionally manufactured materials used and documented, use a minimum of 50% of building materials and products that are extracted, harvested or recovered (as well as manufactured) within 500 miles of the project site.

2.04 MANUFACTURERS

A. In other Part 2 articles where subparagraph titles below introduce lists, the following requirements apply for product selection:

1. Manufacturers: Subject to compliance with requirements, provide products by the manufacturers specified.

2.05 PIPE, TUBE, AND FITTINGS

A. Refer to individual Division 22 piping Sections for pipe, tube, and fitting materials and joining methods.

B. Pipe Threads: ASME B1.20.1 for factory-threaded pipe and pipe fittings.

2.06 JOINING MATERIALS

A. Refer to individual Division 22 piping Sections for special joining materials not listed below.

B. Pipe-Flange Gasket Materials: Suitable for chemical and thermal conditions of piping system contents.

1. ASME B16.21, nonmetallic, flat, asbestos-free, 1/8-inch maximum thickness unless thickness or specific material is indicated.

a. Full-Face Type: For flat-face, Class 125, cast-iron and cast-bronze flanges.

b. Narrow-Face Type: For raised-face, Class 250, cast-iron and steel flanges.

2. AWWA C110, rubber, flat face, 1/8 inch thick, unless otherwise indicated; and full-face or ring type, unless otherwise indicated.

C. Flange Bolts and Nuts: ASME B18.2.1, carbon steel, unless otherwise indicated.

D. Plastic, Pipe-Flange Gasket, Bolts, and Nuts: Type and material recommended by piping system manufacturer, unless otherwise indicated.

E. Solder Filler Metals: ASTM B 32, lead-free alloys. Include water-flushable flux according to ASTM B 813.

F. Brazing Filler Metals: AWS A5.8, BCuP Series, copper-phosphorus alloys for general-duty brazing, unless otherwise indicated; and AWS A5.8, BAg1, silver alloy for refrigerant piping, unless otherwise indicated.

G. Welding Filler Metals: Comply with AWS D10.12 for welding materials appropriate for wall thickness and chemical analysis of steel pipe being welded.

H. Solvent Cements for Joining Plastic Piping:

1. ABS Piping: ASTM D 2235.

2. CPVC Piping: ASTM F 493.

3. PVC Piping: ASTM D 2564. Include primer according to ASTM F 656.

4. PVC to ABS Piping Transition: ASTM D 3138.

I. Fiberglass Pipe Adhesive: As furnished or recommended by pipe manufacturer.

2.07 TRANSITION FITTINGS

A. AWWA Transition Couplings: Same size as, and with pressure rating at least equal to and with ends compatible with, piping to be joined.

1. Manufacturers:

a. Cascade Waterworks Mfg. Co.

b. Dresser Industries, Inc.; DMD Div.

c. Ford Meter Box Company, Incorporated (The); Pipe Products Div.

d. JCM Industries.

e. Smith-Blair, Inc.

f. Viking Johnson.

2. Underground Piping NPS 1-1/2 and Smaller: Manufactured fitting or coupling.

3. Underground Piping NPS 2 and Larger: AWWA C219, metal sleeve-type coupling.

4. Aboveground Pressure Piping: Pipe fitting.

B. Plastic-to-Metal Transition Fittings: CPVC and PVC one-piece fitting with manufacturer's Schedule 80 equivalent dimensions; one end with threaded brass insert, and one solvent-cement-joint end.

1. Manufacturers:

a. Eslon Thermoplastics.

C. Plastic-to-Metal Transition Adaptors: One-piece fitting with manufacturer's SDR 11 equivalent dimensions; one end with threaded brass insert, and one solvent-cement-joint end.

1. Manufacturers:

    a. Thompson Plastics, Inc.

D. Plastic-to-Metal Transition Unions: MSS SP-107, CPVC PVC CPVC and PVC four-part union. Include brass end, solvent-cement-joint end, rubber O-ring, and union nut.

1. Manufacturers:

    a. NIBCO INC.

    b. NIBCO, Inc.; Chemtrol Div.

E. Flexible Transition Couplings for Underground Non-pressure Drainage Piping: ASTM C 1173 with elastomeric sleeve, ends same size as piping to be joined, and corrosion-resistant metal band on each end.

1. Manufacturers:

    a. Cascade Waterworks Mfg. Co.

    b. Fernco, Inc.

    c. Mission Rubber Company.

    d. Plastic Oddities, Inc.

2.08 DIELECTRIC FITTINGS

A. Description: Combination fitting of copper alloy and ferrous materials with threaded, solder-joint, plain, or weld-neck end connections that match piping system materials.

B. Insulating Material: Suitable for system fluid, pressure, and temperature.

C. Dielectric Unions: Factory-fabricated, union assembly, for 250-psig minimum working pressure at 180 deg F

D. Coordinate subparagraph and associated subparagraphs below with Part 2 "Manufacturers" Article. Retain "Available" for nonproprietary and delete for semiproprietary specifications.

1. Manufacturers:

    a. Capitol Manufacturing Co.

    b. Central Plastics Company.

    c. Eclipse, Inc.

    d. Epco Sales, Inc.

    e. Hart Industries, International, Inc.

f. Watts Industries, Inc.; Water Products Div.

g. Zurn Industries, Inc.; Wilkins Div.

E. Dielectric Flanges: Factory-fabricated, companion-flange assembly, for 150- or 300-psig minimum working pressure as required to suit system pressures.

1. Manufacturers:

a. Capitol Manufacturing Co.

b. Central Plastics Company.

c. Epco Sales, Inc.

d. Watts Industries, Inc.; Water Products Div.

F. Dielectric-Flange Kits: Companion-flange assembly for field assembly. Include flanges, full-face- or ring-type neoprene or phenolic gasket, phenolic or polyethylene bolt sleeves, phenolic washers, and steel backing washers.

1. Manufacturers:

a. Advance Products & Systems, Inc.

b. Calpico, Inc.

c. Central Plastics Company.

d. Pipeline Seal and Insulator, Inc.

2. Separate companion flanges and steel bolts and nuts shall have 150- or 300-psig minimum working pressure where required to suit system pressures.

G. Dielectric Couplings: Galvanized-steel coupling with inert and noncorrosive, thermoplastic lining; threaded ends; and 300-psig minimum working pressure at 225 deg F

1. Manufacturers:

a. Calpico, Inc.

b. Lochinvar Corp.

H. Dielectric Nipples: Electroplated steel nipple with inert and noncorrosive, thermoplastic lining; plain, threaded, or grooved ends; and 300-psig minimum working pressure at 225 deg F.

1. Manufacturers:

a. Perfection Corp.

b. Precision Plumbing Products, Inc.

c. Sioux Chief Manufacturing Co., Inc.

d. Victaulic Co. of America.

2.09 MECHANICAL SLEEVE SEALS

A. Description: Modular sealing element unit, designed for field assembly, to fill annular space between pipe and sleeve.

1. Manufacturers:

a. Advance Products & Systems, Inc.

b. Calpico, Inc.

c. Metraflex Co.

d. Pipeline Seal and Insulator, Inc.

2. Sealing Elements: EPDM interlocking links shaped to fit surface of pipe. Include type and number required for pipe material and size of pipe.

3. Pressure Plates: Carbon steel. Include two for each sealing element.

4. Connecting Bolts and Nuts: Stainless steel of length required to secure pressure plates to sealing elements. Include one for each sealing element.

2.10 SLEEVES

A. Galvanized-Steel Sheet: 0.0239-inch minimum thickness; round tube closed with welded longitudinal joint.

B. Steel Pipe: ASTM A 53, Type E, Grade B, Schedule 40, galvanized, plain ends.

C. Cast Iron: Cast or fabricated "wall pipe" equivalent to ductile-iron pressure pipe, with plain ends and integral water-stop, unless otherwise indicated.

D. Stack Sleeve Fittings: Manufactured, cast-iron sleeve with integral clamping flange. Include clamping ring and bolts and nuts for membrane flashing.

1. Under-deck Clamp: Clamping ring with set screws.

E. Molded PVC: Permanent, with nailing flange for attaching to wooden forms.

F. PVC Pipe: ASTM D 1785, Schedule 40.

G. Molded PE: Reusable, PE, tapered-cup shaped, and smooth-outer surface with nailing flange for attaching to wooden forms.

2.11 ESCUTCHEONS

A. Description: Manufactured wall and ceiling escutcheons and floor plates, with an ID to closely fit around pipe, tube, and insulation of insulated piping and an OD that completely covers opening.

B. One-Piece, Deep-Pattern Type: Deep-drawn, box-shaped brass with polished chrome-plated finish.

C. One-Piece, Cast-Brass Type: With set screw.

1. Finish: Polished chrome-plated.

D. Split-Casting, Cast-Brass Type: With concealed hinge and set screw.

1. Finish: Polished chrome-plated.

E. One-Piece, Stamped-Steel Type: With set screw set screw or spring clips and chrome-plated finish.

F. Split-Plate, Stamped-Steel Type: With concealed hinge, set screw or spring clips, and chrome-plated finish.

G. One-Piece, Floor-Plate Type: Cast-iron floor plate.

H. Split-Casting, Floor-Plate Type: Cast brass with concealed hinge and set screw.

2.12 GROUT

A. Description: ASTM C 1107, Grade B, nonshrink and nonmetallic, dry hydraulic-cement grout.

1. Characteristics: Post-hardening, volume-adjusting, nonstaining, noncorrosive, nongaseous, and recommended for interior and exterior applications.

2. Design Mix: 5000-psi, 28-day compressive strength.

3. Packaging: Premixed and factory packaged.

PART 3 - EXECUTION

3.01 PIPING SYSTEMS - COMMON REQUIREMENTS

A. Install piping according to the following requirements and Division 22 Sections specifying piping systems.

B. Drawing plans, schematics, and diagrams indicate general location and arrangement of piping systems. Indicated locations and arrangements were used to size pipe and calculate friction loss, expansion, pump sizing, and other design considerations. Install piping as indicated unless deviations to layout are approved on Coordination Drawings.

C. Install piping in concealed locations, unless otherwise indicated and except in equipment rooms and service areas.

D. Install piping indicated to be exposed and piping in equipment rooms and service areas at right angles or parallel to building walls. Diagonal runs are prohibited unless specifically indicated otherwise.

E. Install piping above accessible ceilings to allow sufficient space for ceiling panel removal.

F. Install piping to permit valve servicing.

G. Install piping at indicated slopes.

H. Install piping free of sags and bends.

I. Install fittings for changes in direction and branch connections.

J. Install piping to allow application of insulation.

K. Select system components with pressure rating equal to or greater than system operating pressure.

L. Install escutcheons for penetrations of walls, ceilings, and floors according to the following:

1. New Piping:

   a. Piping with Fitting or Sleeve Protruding from Wall: One-piece, deep-pattern type.

   b. Chrome-Plated Piping: One-piece, cast-brass type with polished chrome-plated finish.

   c. Insulated Piping: One-piece, stamped-steel type with spring clips.

   d. Bare Piping at Wall and Floor Penetrations in Finished Spaces: One-piece, cast-brass type with polished chrome-plated finish.

   e. Bare Piping at Wall and Floor Penetrations in Finished Spaces: One-piece, stamped-steel type.

   f. Bare Piping at Ceiling Penetrations in Finished Spaces: One-piece, cast-brass type with polished chrome-plated finish.

   g. Bare Piping in Unfinished Service Spaces: One-piece, cast-brass type with polished chrome-plated finish.

   h. Bare Piping in Equipment Rooms: One-piece, cast-brass type.

   i. Bare Piping in Equipment Rooms: One-piece, stamped-steel type with set screw or spring clips.

j. Bare Piping at Floor Penetrations in Equipment Rooms: One-piece, floor-plate type.

M. Sleeves are not required for core-drilled holes.

N. Permanent sleeves are not required for holes formed by removable PE sleeves.

O. Install sleeves for pipes passing through concrete and masonry walls and concrete floor and roof slabs.

P. Install sleeves for pipes passing through concrete and masonry walls, gypsum-board partitions, and concrete floor and roof slabs.

1. Cut sleeves to length for mounting flush with both surfaces.

a. Exception: Extend sleeves installed in floors of mechanical equipment areas or other wet areas 2 inches above finished floor level. Extend cast-iron sleeve fittings below floor slab as required to secure clamping ring if ring is specified.

2. Install sleeves in new walls and slabs as new walls and slabs are constructed.

3. Install sleeves that are large enough to provide 1/4-inch annular clear space between sleeve and pipe or pipe insulation. Use the following sleeve materials:

a. Steel Pipe Sleeves: For pipes smaller than NPS 6.

b. Steel Sheet Sleeves: For pipes NPS 6 and larger, penetrating gypsum-board partitions.

c. Stack Sleeve Fittings: For pipes penetrating floors with membrane waterproofing. Secure flashing between clamping flanges. Install section of cast-iron soil pipe to extend sleeve to 2 inches above finished floor level. Refer to Division 07 Section "Sheet Metal Flashing and Trim" for flashing.

1) Seal space outside of sleeve fittings with grout.

4. Except for underground wall penetrations, seal annular space between sleeve and pipe or pipe insulation, using joint sealants appropriate for size, depth, and location of joint. Refer to Division 07 Section "Joint Sealants" for materials and installation.

Q. Aboveground, Exterior-Wall Pipe Penetrations: Seal penetrations using sleeves and mechanical sleeve seals. Select sleeve size to allow for 1-inch annular clear space between pipe and sleeve for installing mechanical sleeve seals.

1. Install steel pipe for sleeves smaller than 6 inches in diameter.

2. Install cast-iron "wall pipes" for sleeves 6 inches and larger in diameter.

3. Mechanical Sleeve Seal Installation: Select type and number of sealing elements required for pipe material and size. Position pipe in center of sleeve. Assemble mechanical sleeve seals and install in annular space between pipe and sleeve. Tighten

bolts against pressure plates that cause sealing elements to expand and make watertight seal.

R. Underground, Exterior-Wall Pipe Penetrations: Install cast-iron "wall pipes" for sleeves. Seal pipe penetrations using mechanical sleeve seals. Select sleeve size to allow for 1-inch annular clear space between pipe and sleeve for installing mechanical sleeve seals.

1. Mechanical Sleeve Seal Installation: Select type and number of sealing elements required for pipe material and size. Position pipe in center of sleeve. Assemble mechanical sleeve seals and install in annular space between pipe and sleeve. Tighten bolts against pressure plates that cause sealing elements to expand and make watertight seal.

S. Fire-Barrier Penetrations: Maintain indicated fire rating of walls, partitions, ceilings, and floors at pipe penetrations. Seal pipe penetrations with fire stop materials. Refer to Division 07 Section "Penetration Firestopping" for materials.

T. Verify final equipment locations for roughing-in.

U. Refer to equipment specifications in other Sections of these Specifications for roughing-in requirements.

3.02 PIPING JOINT CONSTRUCTION

A. Join pipe and fittings according to the following requirements and Division 22 Sections specifying piping systems.

B. Ream ends of pipes and tubes and remove burrs. Bevel plain ends of steel pipe.

C. Remove scale, slag, dirt, and debris from inside and outside of pipe and fittings before assembly.

D. Soldered Joints: Apply ASTM B 813, water-flushable flux, unless otherwise indicated, to tube end. Construct joints according to ASTM B 828 or CDA's "Copper Tube Handbook," using lead-free solder alloy complying with ASTM B 32.

E. Brazed Joints: Construct joints according to AWS's "Brazing Handbook," "Pipe and Tube" Chapter, using copper-phosphorus brazing filler metal complying with AWS A5.8.

F. Threaded Joints: Thread pipe with tapered pipe threads according to ASME B1.20.1. Cut threads full and clean using sharp dies. Ream threaded pipe ends to remove burrs and restore full ID. Join pipe fittings and valves as follows:

1. Apply appropriate tape or thread compound to external pipe threads unless dry seal threading is specified.

2. Damaged Threads: Do not use pipe or pipe fittings with threads that are corroded or damaged. Do not use pipe sections that have cracked or open welds.

G. Welded Joints: Construct joints according to AWS D10.12, using qualified processes and welding operators according to Part 1 "Quality Assurance" Article.

H. Flanged Joints: Select appropriate gasket material, size, type, and thickness for service application. Install gasket concentrically positioned. Use suitable lubricants on bolt threads.

I. Plastic Piping Solvent-Cement Joints: Clean and dry joining surfaces. Join pipe and fittings according to the following:

1. Comply with ASTM F 402 for safe-handling practice of cleaners, primers, and solvent cements.

2. ABS Piping: Join according to ASTM D 2235 and ASTM D 2661 Appendixes.

3. CPVC Piping: Join according to ASTM D 2846/D 2846M Appendix.

4. PVC Pressure Piping: Join schedule number ASTM D 1785, PVC pipe and PVC socket fittings according to ASTM D 2672. Join other-than-schedule-number PVC pipe and socket fittings according to ASTM D 2855.

5. PVC Nonpressure Piping: Join according to ASTM D 2855.

6. PVC to ABS Nonpressure Transition Fittings: Join according to ASTM D 3138 Appendix.

J. Plastic Pressure Piping Gasketed Joints: Join according to ASTM D 3139.

K. Plastic Non-pressure Piping Gasketed Joints: Join according to ASTM D 3212.

L. PE Piping Heat-Fusion Joints: Clean and dry joining surfaces by wiping with clean cloth or paper towels. Join according to ASTM D 2657.

1. Plain-End Pipe and Fittings: Use butt fusion.

2. Plain-End Pipe and Socket Fittings: Use socket fusion.

M. Fiberglass Bonded Joints: Prepare pipe ends and fittings, apply adhesive, and join according to pipe manufacturer's written instructions.

3.03 PIPING CONNECTIONS

A. Make connections according to the following, unless otherwise indicated:

1. Install unions, in piping NPS 2 and smaller, adjacent to each valve and at final connection to each piece of equipment.

2. Install flanges, in piping NPS 2-1/2 and larger, adjacent to flanged valves and at final connection to each piece of equipment.

3. Dry Piping Systems: Install dielectric unions and flanges to connect piping materials of dissimilar metals.

4. Wet Piping Systems: Install dielectric coupling and nipple fittings to connect piping materials of dissimilar metals.

3.04 EQUIPMENT INSTALLATION - COMMON REQUIREMENTS

A. Install equipment to allow maximum possible headroom unless specific mounting heights are not indicated.

B. Install equipment level and plumb, parallel and perpendicular to other building systems and components in exposed interior spaces, unless otherwise indicated.

C. Install plumbing equipment to facilitate service, maintenance, and repair or replacement of components. Connect equipment for ease of disconnecting, with minimum interference to other installations. Extend grease fittings to accessible locations.

D. Install equipment to allow right of way for piping installed at required slope.

3.05 PAINTING

A. Painting of plumbing systems, equipment, and components is specified in Division 09 Sections "Interior Painting" and "Exterior Painting."

B. Damage and Touchup: Repair marred and damaged factory-painted finishes with materials and procedures to match original factory finish.

3.06 CONCRETE BASES

A. Concrete Bases: Anchor equipment to concrete base according to equipment manufacturer's written instructions and according to seismic codes at Project.

1. Construct concrete bases of dimensions indicated, but not less than 4 inches larger in both directions than supported unit.

2. Install dowel rods to connect concrete base to concrete floor. Unless otherwise indicated, install dowel rods on 18-inch centers around the full perimeter of the base.

3. Install epoxy-coated anchor bolts for supported equipment that extend through concrete base, and anchor into structural concrete floor.

4. Place and secure anchorage devices. Use supported equipment manufacturer's setting drawings, templates, diagrams, instructions, and directions furnished with items to be embedded.

5. Install anchor bolts to elevations required for proper attachment to supported equipment.

6. Install anchor bolts according to anchor-bolt manufacturer's written instructions.

7. Use 3000-psi, 28-day compressive-strength concrete and reinforcement as specified in Division 03 Section "Cast-in-Place Concrete."

3.07 ERECTION OF METAL SUPPORTS AND ANCHORAGES

A. Refer to Division 05 Section "Metal Fabrications" for structural steel.

B. Cut, fit, and place miscellaneous metal supports accurately in location, alignment, and elevation to support and anchor plumbing materials and equipment.

C. Field Welding: Comply with AWS D1.1.

3.08 ERECTION OF WOOD SUPPORTS AND ANCHORAGES

A. Cut, fit, and place wood grounds, nailers, blocking, and anchorages to support, and anchor plumbing materials and equipment.

B. Select fastener sizes that will not penetrate members if opposite side will be exposed to view or will receive finish materials. Tighten connections between members. Install fasteners without splitting wood members.

C. Attach to substrates as required to support applied loads.

3.09 GROUTING

A. Mix and install grout for plumbing equipment base bearing surfaces, pump and other equipment base plates, and anchors.

B. Clean surfaces that will come into contact with grout.

C. Provide forms as required for placement of grout.

D. Avoid air entrapment during placement of grout.

E. Place grout, completely filling equipment bases.

F. Place grout on concrete bases and provide smooth bearing surface for equipment.

G. Place grout around anchors.

H. Cure placed grout.

END OF SECTION

22 05 29

HANGERS AND SUPPORTS FOR PLUMBING PIPING AND EQUIPMENT

PART 1 - GENERAL

1.01 RELATED DOCUMENTS

A. Drawings and general provisions of the Contract, including General and Supplementary Conditions and Division 01 Specification Sections, apply to this Section.

1.02 SUMMARY

A. This Section includes the following hangers and supports for plumbing system piping and equipment:

1. Steel pipe hangers and supports.
2. Trapeze pipe hangers.
3. Metal framing systems.
4. Thermal-hanger shield inserts.
5. Fastener systems.
6. Pipe stands.
7. Pipe positioning systems.
8. Equipment supports.

B. Related Sections include the following:

1. Division 05 Section "Metal Fabrications" for structural-steel shapes and plates for trapeze hangers for pipe and equipment supports.
2. Division 21 Section "Sprinklers Systems" for fire-suppression piping.
3. Section 013300 Submittals.
4. Section 01524 Construction Waste Management
5. Section 01352 LEED Requirements
6. Section 01611 Environmental Management
7. Section 01570 Pollution Prevention and Control

1.03 DEFINITIONS

A. MSS: Manufacturers Standardization Society for “The Valve and Fittings Industry Inc”.

B. Terminology: As defined in MSS SP-90, "Guidelines on Terminology for Pipe Hangers and Supports."

1.04 PERFORMANCE REQUIREMENTS

A. Design supports for multiple pipes, including pipe stands, capable of supporting combined weight of supported systems, system contents, and test water.

B. Design equipment supports capable of supporting combined operating weight of supported equipment and connected systems and components.

C. Design seismic-restraint hangers and supports for piping and equipment and obtain approval from authorities having jurisdiction.

1.05 SUBMITTALS

A. Product Data: For the following:

1. Steel pipe hangers and supports.

2. Thermal-hanger shield inserts.

3. Powder-actuated fastener systems.

4. Pipe positioning systems.

B. Shop Drawings: Show fabrication and installation details and include calculations for the following:

1. Trapeze pipe hangers. Include Product Data for components.

2. Metal framing systems. Include Product Data for components.

3. Pipe stands. Include Product Data for components.

4. Equipment supports.

C. Welding certificates.

D. Product data. Unless otherwise indicated, submit the following for each type of product provided under work of this Section:

1. Recycled Content:

a. Indicate recycled content; indicate percentage of pre-consumer and post-consumer recycled content per unit of product.

2. Local/Regional Materials:

   a. Indicate location of manufacturing facility; indicate distance between manufacturing facility and the project site.

   b. Indicate location of extraction, harvesting, and recovery; indicate distance between extraction, harvesting, and recovery and the project site.

3. VOC data:

   a. Submit manufacturer's product data for joint compounds. Indicate VOC and chemical component limits of the product. Submit MSDS highlighting VOC and chemical component limits. VOC contents and chemical component limits must be less than the limits of Green Seal’s Standard GS-11.

   b. Submit manufacturer’s certification that products comply with Green Seal’s Standard GS-11

   c. Submit environmental data in accordance with Table 1 of ASTM E2129 for products provided under work of this Section.

4. Submit the following according to Conditions of the Construction Contract.

   a. Product data. Unless otherwise indicated, submit the following for each type of product provided under work of this Section:

5. General: Submit additional LEED submittal requirements included in other sections of the Specifications.

6. LEED submittals are in addition to other submittals. If submitted item is identical to that submitted to comply with other requirements, submit duplicate copies as a separate submittal to verify compliance with indicated LEED requirements.

1.06 QUALITY ASSURANCE

A. Welding: Qualify procedures and personnel according to ASME Boiler and Pressure Vessel Code: Section IX.

B. Welding: Qualify procedures and personnel according to the following:

   1. AWS D1.1, "Structural Welding Code--Steel."

   2. ASME Boiler and Pressure Vessel Code: Section IX.

PART 2 - PRODUCTS

2.01 ENVIRONMENTALLY PREFERABLE PRODUCTS

A. Provide environmentally preferable products to the greatest extent possible.

1. To the greatest extent possible, provide products and materials that promote stewardship of the earth's resources, promote good indoor environmental quality (IEQ), and promote efficiencies in operational performance.

B. Provide products listed on the EPA Comprehensive Procurement Guidelines to the greatest extent practicable.

C. Provide products listed on the USGBC Directory of Products and Services to the greatest extent possible.

2.02 RECYCLED CONTENT

A. Provide recycled content products to the greatest extent possible.

1. To the greatest extent possible, provide materials with recycled content such that the sum of post-consumer recycled content plus one-half of the post-industrial content constitutes at least 10% of the total value of the materials in the project.

2.03 REGIONAL MATERIALS

A. Provide Regional materials and products to the greatest extent possible that are extracted and manufactured within the region.

1. Provide materials and products that use a minimum of 20 % of building products that are manufactured regionally within a radius of 500 miles from the project site.

a. Manufacturing refers to the final assembly of components into the building product that is furnished and installed by the tradesman.

2. Of the regionally manufactured materials used and documented, use a minimum of 50% of building materials and products that are extracted, harvested or recovered (as well as manufactured) within 500 miles of the project site.

2.04 MANUFACTURERS

A. In other Part 2 articles where titles below introduce lists, the following requirements apply to product selection:

1. Manufacturers: Subject to compliance with requirements, provide products by one of the manufacturers specified.

2.05 STEEL PIPE HANGERS AND SUPPORTS

A. Description: MSS SP-58, Types 1 through 58, factory-fabricated components. Refer to Part 3 "Hanger and Support Applications" Article for where to use specific hanger and support types.

B. Available Manufacturers:

1. B-Line Systems, Inc.; a division of Cooper Industries.

2. Carpenter & Paterson, Inc.

3. Globe Pipe Hanger Products, Inc.

4. Grinnell Corp.

C. Galvanized, Metallic Coatings: Pregalvanized or hot dipped.

D. Nonmetallic Coatings: Plastic coating, jacket, or liner.

E. Padded Hangers: Hanger with fiberglass or other pipe insulation pad or cushion for support of bearing surface of piping.

2.06 TRAPEZE PIPE HANGERS

A. Description: MSS SP-69, Type 59, shop- or field-fabricated pipe-support assembly made from structural-steel shapes with MSS SP-58 hanger rods, nuts, saddles, and U-bolts.

2.07 METAL FRAMING SYSTEMS

A. Description: MFMA-3, shop- or field-fabricated pipe-support assembly made of steel channels and other components.

B. Available Manufacturers:

1. B-Line Systems, Inc.; a division of Cooper Industries.

2. ERICO/Michigan Hanger Co.; ERISTRUT Div.

3. GS Metals Corp.

4. Power-Strut Div.; Tyco International, Ltd.

5. Thomas & Betts Corporation.

6. Tolco Inc.

7. Unistrut Corp.; Tyco International, Ltd.

C. Coatings: Manufacturer's standard finish unless bare metal surfaces are indicated.

D. Nonmetallic Coatings: Plastic coating, jacket, or liner.

2.08 THERMAL-HANGER SHIELD INSERTS

A. Description: 100-psig-minimum, compressive-strength insulation insert encased in sheet metal shield.

B. Manufacturers:

1. Engineered Products, Inc.

2. Insulation Carpenter & Paterson, Inc.

3. ERICO/Michigan Hanger Co.
4. PHS Industries, Inc.
5. Pipe Shields, Inc.
6. Rilco Manufacturing Company, Inc.

C. Value -Insert Material for Cold Piping: Water-repellent treated, ASTM C 533, Type I calcium silicate.

D. Insulation-Insert Material for Hot Piping: Water-repellent treated, ASTM C 533, Type I calcium silicate.

E. For Trapeze or Clamped Systems: Insert and shield shall cover entire circumference of pipe.

F. For Clevis or Band Hangers: Insert and shield shall cover lower 180 degrees of pipe.

G. Insert Length: Extend 2 inches beyond sheet metal shield for piping operating below ambient air temperature.

2.09 FASTENER SYSTEMS

A. Powder-Actuated Fasteners: Threaded-steel stud, for use in hardened portland cement concrete with pull-out, tension, and shear capacities appropriate for supported loads and building materials where used.

1. Manufacturers:
   a. Hilti, Inc.
   b. ITW Ramset/Red Head.
   c. Masterset Fastening Systems, Inc.
   d. MKT Fastening, LLC.
   e. Powers Fasteners.

B. Mechanical-Expansion Anchors: Insert-wedge-type zinc-coated stainless steel, for use in hardened Portland cement concrete with pull-out, tension, and shear capacities appropriate for supported loads and building materials where used.

1. Manufacturers:
   a. B-Line Systems, Inc.; a division of Cooper Industries.
   b. Empire Industries, Inc.
   c. Hilti, Inc.

d. ITW Ramset/Red Head.

e. MKT Fastening, LLC.

f. Powers Fasteners.

2.10 PIPE STAND FABRICATION

A. Pipe Stands, General: Shop or field-fabricated assemblies made of manufactured corrosion-resistant components to support roof-mounted piping.

B. All piping on roof shall be supported by roof mounted pipe hangers. No wood is allowed.

C. All Pipe support system on roof shall be sized / designed by manufacturer and installed by this contractor. The pipe support system shall be suitable for the insulated chilled water and hot water piping system as indicated on drawings. Pipe support system must be provided with the fallowing requirements:

1. Bottom of the pipe must be 18″ above roof finished level.

2. Pipe support spacing shall be based on the maximum roof load of 2.5 # / sq-inch. Contractor must size the pedestal base area for each support in coordination with the required support spacing such that the total load on roof does not exceed 2.5 # / sq-inch.

3. Submit the proposed scheme to the engineer for approval before material procurement or installation of any work.

4. Contractor is responsible to price all the support system at the project bid stage.

5. Contractor is responsible to coordinate all the support system with the roofing drawings of this package.

6. Provide expansion loops and floating support system in accordance with requirements.

7. The support channels and plate frames indicated on the drawings are the required minimum standards. Support system vendor must verify the loads on each section and upgrade as necessary.

D. Compact Pipe Stand: One-piece plastic unit with integral-rod-roller, pipe clamps, or V-shaped cradle to support pipe, for roof installation without membrane penetration.

1. Manufacturers:

a. ERICO/Michigan Hanger Co.

b. MIRO Industries.

c. PHP Systems

E. Low-Type, Single-Pipe Stand: One-piece plastic base unit with plastic roller, for roof installation without membrane penetration.

1. Manufacturers:

    a. MIRO Industries (or equal).

    b. PHP Systems

F. High-Type, Single-Pipe Stand: Assembly of base, vertical and horizontal members, and pipe support, for roof installation without membrane penetration.

1. Manufacturers:

    a. ERICO/Michigan Hanger Co.

    b. MIRO Industries.

    c. Portable Pipe Hangers.

2. Base: Plastic.

3. Vertical Members: Two or more cadmium-plated-steel or stainless-steel, continuous-thread rods.

4. Horizontal Member: Cadmium-plated-steel or stainless-steel rod with plastic or stainless-steel, roller-type pipe support.

G. High-Type, Multiple-Pipe Stand: Assembly of bases, vertical and horizontal members, and pipe supports, for roof installation without membrane penetration.

1. Manufacturers:

    a. Portable Pipe Hangers.

    b. MIRO Industries.

    c. Portable Pipe Hangers

2. Bases: One or more plastic.

3. Vertical Members: Two or more protective-coated-steel channels.

4. Horizontal Member: Protective-coated-steel channel.

5. Pipe Supports: Galvanized-steel, clevis-type pipe hangers.

H. Curb-Mounting-Type Pipe Stands: Shop- or field-fabricated pipe support made from structural-steel shape, continuous-thread rods, and rollers for mounting on permanent stationary roof curb.

2.11 PIPE POSITIONING SYSTEMS

A. Description: IAPMO PS 42, system of metal brackets, clips, and straps for positioning piping in pipe spaces for plumbing fixtures for commercial applications.

B. Manufacturers:

1. C & S Mfg. Corp.

2. HOLDRITE Corp.; Hubbard Enterprises.

3. Samco Stamping, Inc.

2.12 EQUIPMENT SUPPORTS

A. Description: Welded, shop- or field-fabricated equipment support made from structural-steel shapes.

2.13 MISCELLANEOUS MATERIALS

A. Structural Steel: ASTM A 36/A 36M, steel plates, shapes, and bars; black and galvanized.

B. Grout: ASTM C 1107, factory-mixed and -packaged, dry, hydraulic-cement, non-shrink and nonmetallic grout; suitable for interior and exterior applications.

1. Properties: Non-staining, noncorrosive, and nongaseous.

2. Design Mix: 5000-psi, 28-day compressive strength.

PART 3 - EXECUTION

3.01 HANGER AND SUPPORT APPLICATIONS

A. Specific hanger and support requirements are specified in Sections specifying piping systems and equipment.

B. Comply with MSS SP-69 for pipe hanger selections and applications that are not specified in piping system Sections.

C. Use hangers and supports with galvanized, metallic coatings for piping and equipment that will not have field-applied finish.

D. Use nonmetallic coatings on attachments for electrolytic protection where attachments are in direct contact with copper tubing.

E. Use padded hangers for piping that is subject to scratching.

F. Horizontal-Piping Hangers and Supports: Unless otherwise indicated and except as specified in piping system Sections, install the following types:

1. Adjustable, Steel Clevis Hangers (MSS Type 1): For suspension of non-insulated or insulated stationary pipes, NPS 1/2 to NPS 30.

2. Yoke-Type Pipe Clamps (MSS Type 2): For suspension of 120 to 450 deg F pipes, NPS 4 to NPS 16, requiring up to 4 inches of insulation.

3. Carbon or Alloy-Steel, Double-Bolt Pipe Clamps (MSS Type 3): For suspension of pipes, NPS 3/4 to NPS 24, requiring clamp flexibility and up to 4 inches of insulation.

4. Steel Pipe Clamps (MSS Type 4): For suspension of cold and hot pipes, NPS 1/2 to NPS 24, if little or no insulation is required.

5. Pipe Hangers (MSS Type 5): For suspension of pipes, NPS 1/2 to NPS 4, to allow off-center closure for hanger installation before pipe erection.

6. Adjustable, Swivel Split- or Solid-Ring Hangers (MSS Type 6): For suspension of non-insulated stationary pipes, NPS 3/4 to NPS 8.

7. Adjustable, Steel Band Hangers (MSS Type 7): For suspension of non-insulated stationary pipes, NPS 1/2 to NPS 8.

8. Adjustable Band Hangers (MSS Type 9): For suspension of noninsulated stationary pipes, NPS 1/2 to NPS 8.

9. Adjustable, Swivel-Ring Band Hangers (MSS Type 10): For suspension of non-insulated stationary pipes, NPS 1/2 to NPS 2.

10. Split Pipe-Ring with or without Turnbuckle-Adjustment Hangers (MSS Type 11): For suspension of non-insulated stationary pipes, NPS 3/8 to NPS 8.

11. Extension Hinged or 2-Bolt Split Pipe Clamps (MSS Type 12): For suspension of non-insulated stationary pipes, NPS 3/8 to NPS 3.

12. U-Bolts (MSS Type 24): For support of heavy pipes, NPS 1/2 to NPS 30.

13. Clips (MSS Type 26): For support of insulated pipes not subject to expansion or contraction.

14. Pipe Saddle Supports (MSS Type 36): For support of pipes, NPS 4 to NPS 36, with steel pipe base stanchion support and cast-iron floor flange.

15. Pipe Stanchion Saddles (MSS Type 37): For support of pipes, NPS 4 to NPS 36, with steel pipe base stanchion support and cast-iron floor flange and with U-bolt to retain pipe.

16. Adjustable, Pipe Saddle Supports (MSS Type 38): For stanchion-type support for pipes, NPS 2-1/2 to NPS 36, if vertical adjustment is required, with steel pipe base stanchion support and cast-iron floor flange.

17. Single Pipe Rolls (MSS Type 41): For suspension of pipes, NPS 1 to NPS 30, from 2 rods if longitudinal movement caused by expansion and contraction might occur.

18. Adjustable Roller Hangers (MSS Type 43): For suspension of pipes, NPS 2-1/2 to NPS 20, from single rod if horizontal movement caused by expansion and contraction might occur.

19. Complete Pipe Rolls (MSS Type 44): For support of pipes, NPS 2 to NPS 42, if longitudinal movement caused by expansion and contraction might occur but vertical adjustment is not necessary.

20. Pipe Roll and Plate Units (MSS Type 45): For support of pipes, NPS 2 to NPS 24, if small horizontal movement caused by expansion and contraction might occur and vertical adjustment is not necessary.

21. Adjustable Pipe Roll and Base Units (MSS Type 46): For support of pipes, NPS 2 to NPS 30, if vertical and lateral adjustment during installation might be required in addition to expansion and contraction.

G. Vertical-Piping Clamps: Unless otherwise indicated and except as specified in piping system Sections, install the following types:

1. Extension Pipe or Riser Clamps (MSS Type 8): For support of pipe risers, NPS 3/4 to NPS 20.

2. Carbon- or Alloy-Steel Riser Clamps (MSS Type 42): For support of pipe risers, NPS 3/4 to NPS 20, if longer ends are required for riser clamps.

H. Hanger-Rod Attachments: Unless otherwise indicated and except as specified in piping system Sections, install the following types:

1. Steel Turnbuckles (MSS Type 13): For adjustment up to 6 inches for heavy loads.

2. Steel Clevises (MSS Type 14): For 120 to 450 deg F piping installations.

3. Swivel Turnbuckles (MSS Type 15): For use with MSS Type 11, split pipe rings.

4. Malleable-Iron Sockets (MSS Type 16): For attaching hanger rods to various types of building attachments.

5. Steel Weld less Eye Nuts (MSS Type 17): For 120 to 450 deg F piping installations.

I. Building Attachments: Unless otherwise indicated and except as specified in piping system Sections, install the following types:

1. Steel or Malleable Concrete Inserts (MSS Type 18): For upper attachment to suspend pipe hangers from concrete ceiling.

2. Top-Beam C-Clamps (MSS Type 19): For use under roof installations with bar-joist construction to attach to top flange of structural shape.

3. Side-Beam or Channel Clamps (MSS Type 20): For attaching to bottom flange of beams, channels, or angles.

4. Center-Beam Clamps (MSS Type 21): For attaching to center of bottom flange of beams.

5. Welded Beam Attachments (MSS Type 22): For attaching to bottom of beams if loads are considerable and rod sizes are large.

6. C-Clamps (MSS Type 23): For structural shapes.

7. Top-Beam Clamps (MSS Type 25): For top of beams if hanger rod is required tangent to flange edge.

8. Side-Beam Clamps (MSS Type 27): For bottom of steel I-beams.

9. Steel-Beam Clamps with Eye Nuts (MSS Type 28): For attaching to bottom of steel I-beams for heavy loads.

10. Linked-Steel Clamps with Eye Nuts (MSS Type 29): For attaching to bottom of steel I-beams for heavy loads, with link extensions.

11. Malleable Beam Clamps with Extension Pieces (MSS Type 30): For attaching to structural steel.

12. Welded-Steel Brackets: For support of pipes from below, or for suspending from above by using clip and rod. Use one of the following for indicated loads:

    a. Light (MSS Type 31): 750 lb.

    b. Medium (MSS Type 32): 1500 lb.

    c. Heavy (MSS Type 33): 3000 lb.

13. Side-Beam Brackets (MSS Type 34): For sides of steel or wooden beams.

14. Plate Lugs (MSS Type 57): For attaching to steel beams if flexibility at beam is required.

15. Horizontal Travelers (MSS Type 58): For supporting piping systems subject to linear horizontal movement where headroom is limited.

J. Saddles and Shields: Unless otherwise indicated and except as specified in piping system Sections, install the following types:

1. Steel Pipe-Covering Protection Saddles (MSS Type 39): To fill interior voids with insulation that matches adjoining insulation.

2. Protection Shields (MSS Type 40): Of length recommended in writing by manufacturer to prevent crushing insulation.

3. Thermal-Hanger Shield Inserts: For supporting insulated pipe.

K. Spring Hangers and Supports: Unless otherwise indicated and except as specified in piping system Sections, install the following types:

1. Restraint-Control Devices (MSS Type 47): Where indicated to control piping movement.

2. Spring Cushions (MSS Type 48): For light loads if vertical movement does not exceed 1-1/4 inches.

3. Spring-Cushion Roll Hangers (MSS Type 49): For equipping Type 41 roll hanger with springs.

4. Spring Sway Braces (MSS Type 50): To retard sway, shock, vibration, or thermal expansion in piping systems.

5. Variable-Spring Hangers (MSS Type 51): Preset to indicated load and limit variability factor to 25 percent to absorb expansion and contraction of piping system from hanger.

6. Variable-Spring Base Supports (MSS Type 52): Preset to indicated load and limit variability factor to 25 percent to absorb expansion and contraction of piping system from base support.

7. Variable-Spring Trapeze Hangers (MSS Type 53): Preset to indicated load and limit variability factor to 25 percent to absorb expansion and contraction of piping system from trapeze support.

8. Constant Supports: For critical piping stress and if necessary to avoid transfer of stress from one support to another support, critical terminal, or connected equipment. Include auxiliary stops for erection, hydrostatic test, and load-adjustment capability. These supports include the following types:

    a. Horizontal (MSS Type 54): Mounted horizontally.

    b. Vertical (MSS Type 55): Mounted vertically.

    c. Trapeze (MSS Type 56): Two vertical-type supports and one trapeze member.

L. Comply with MSS SP-69 for trapeze pipe hanger selections and applications that are not specified in piping system Sections.

M. Comply with MFMA-102 for metal framing system selections and applications that are not specified in piping system Sections.

N. Use mechanical-expansion anchors instead of building attachments where required in concrete construction.

O. Use pipe positioning systems in pipe spaces behind plumbing fixtures to support supply and waste piping for plumbing fixtures.

3.02 HANGER AND SUPPORT INSTALLATION

A. Steel Pipe Hanger Installation: Comply with MSS SP-69 and MSS SP-89. Install hangers, supports, clamps, and attachments as required to properly support piping from building structure.

B. Trapeze Pipe Hanger Installation: Comply with MSS SP-69 and MSS SP-89. Arrange for grouping of parallel runs of horizontal piping and support together on field-fabricated trapeze pipe hangers.

1. Pipes of Various Sizes: Support together and space trapezes for smallest pipe size or install intermediate supports for smaller diameter pipes as specified above for individual pipe hangers.

2. Field fabricated from ASTM A 36/A 36M, steel shapes selected for loads being supported. Weld steel according to AWS D1.1.

C. Fiberglass Pipe Hanger Installation: Comply with applicable portions of MSS SP-69 and MSS SP-89. Install hangers and attachments as required to properly support piping from building structure.

D. Each metal framing system in paragraph below requires calculation and detail.

E. Metal Framing System Installation: Arrange for grouping of parallel runs of piping and support together on field-assembled metal framing systems.

F. Each fiberglass strut system in first paragraph below requires calculation and detail.

G. Fiberglass Strut System Installation: Arrange for grouping of parallel runs of piping and support together on field-assembled fiberglass struts.

H. Thermal-Hanger Shield Installation: Install in pipe hanger or shield for insulated piping.

I. Fastener System Installation:

1. Install powder-actuated fasteners for use in lightweight concrete or concrete slabs less than 4 inches thick in concrete after concrete is placed and completely cured. Use operators that are licensed by powder-actuated tool manufacturer. Install fasteners according to powder-actuated tool manufacturer's operating manual.

2. Install mechanical-expansion anchors in concrete after concrete is placed and completely cured. Install fasteners according to manufacturer's written instructions.

J. Pipe Stand Installation:

1. Pipe Stand Types except Curb-Mounting Type: Assemble components and mount on smooth roof surface. Do not penetrate roof membrane.

2. Curb-Mounting-Type Pipe Stands: Assemble components or fabricate pipe stand and mount on permanent, stationary roof curb. Refer to Division 07 Section "Roof Accessories" for curbs.

K. Pipe Positioning System Installation: Install support devices to make rigid supply and waste piping connections to each plumbing fixture. Refer to Division 22 Section "Plumbing Fixtures" for plumbing fixtures.

L. Install hangers and supports complete with necessary inserts, bolts, rods, nuts, washers, and other accessories.

M. Equipment Support Installation: Fabricate from welded-structural-steel shapes.

N. Install hangers and supports to allow controlled thermal and seismic movement of piping systems, to permit freedom of movement between pipe anchors, and to facilitate action of expansion joints, expansion loops, expansion bends, and similar units.

O. Install lateral bracing with pipe hangers and supports to prevent swaying.

P. Install building attachments within concrete slabs or attach to structural steel. Install additional attachments at concentrated loads, including valves, flanges, and strainers, NPS 2-1/2 and larger and at changes in direction of piping. Install concrete inserts before concrete is placed; fasten inserts to forms and install reinforcing bars through openings at top of inserts.

Q. Load Distribution: Install hangers and supports so piping live and dead loads and stresses from movement will not be transmitted to connected equipment.

R. Pipe Slopes: Install hangers and supports to provide indicated pipe slopes and so maximum pipe deflections allowed by ASME B31.9 (for building services piping) are not exceeded.

S. Insulated Piping: Comply with the following:

1. Attach clamps and spacers to piping.

   a. Piping Operating above Ambient Air Temperature: Clamp may project through insulation.

   b. Piping Operating below Ambient Air Temperature: Use thermal-hanger shield insert with clamp sized to match OD of insert.

   c. Do not exceed pipe stress limits according to ASME B31.9 for building services piping.

2. Install MSS SP-58, Type 39, protection saddles if insulation without vapor barrier is indicated. Fill interior voids with insulation that matches adjoining insulation.

   a. Option: Thermal-hanger shield inserts may be used. Include steel weight-distribution plate for pipe NPS 4 and larger if pipe is installed on rollers.

3. Install MSS SP-58, Type 40, protective shields on cold piping with vapor barrier. Shields shall span an arc of 180 degrees.

   a. Option: Thermal-hanger shield inserts may be used. Include steel weight-distribution plate for pipe NPS 4 and larger if pipe is installed on rollers.

4. Shield Dimensions for Pipe: Not less than the following:

   a. NPS 1/4 to NPS 3-1/2: 12 inches long and 0.048 inch thick.

   b. NPS 4: 12 inches long and 0.06 inch thick.

   c. NPS 5 and NPS 6: 18 inches long and 0.06 inch thick.

   d. NPS 8 to NPS 14: 24 inches long and 0.075 inch thick.

e. NPS 16 to NPS 24: 24 inch long and 0.105 inch thick.

5. Pipes NPS 8 and Larger: Include wood inserts.

6. Insert Material: Length at least as long as protective shield.

7. Thermal-Hanger Shields: Install with insulation same thickness as piping insulation.

3.03 EQUIPMENT SUPPORTS

A. Fabricate structural-steel stands to suspend equipment from structure overhead or to support equipment above floor.

B. Grouting: Place grout under supports for equipment and make smooth bearing surface.

C. Provide lateral bracing, to prevent swaying, for equipment supports.

3.04 METAL FABRICATIONS

A. Cut, drill, and fit miscellaneous metal fabrications for trapeze pipe hangers and equipment supports.

B. Fit exposed connections together to form hairline joints. Field weld connections that cannot be shop welded because of shipping size limitations.

C. Field Welding: Comply with AWS D1.1 procedures for shielded metal arc welding, appearance and quality of welds, and methods used in correcting welding work, and with the following:

1. Use materials and methods that minimize distortion and develop strength and corrosion resistance of base metals.

2. Obtain fusion without undercut or overlap.

3. Remove welding flux immediately.

4. Finish welds at exposed connections so no roughness shows after finishing and contours of welded surfaces match adjacent contours.

3.05 ADJUSTING

A. Hanger Adjustments: Adjust hangers to distribute loads equally on attachments and to achieve indicated slope of pipe.

B. Trim excess length of continuous-thread hanger and support rods to 1-1/2 inches.

3.06 PAINTING

A. Touch Up: Clean field welds and abraded areas of shop paint. Paint exposed areas immediately after erecting hangers and supports. Use same materials as used for shop painting. Comply with SSPC-PA 1 requirements for touching up field-painted surfaces.

B. Apply paint by brush or spray to provide minimum dry film thickness of 2.0 mils.

C. Touch Up: Cleaning and touchup painting of field welds, bolted connections, and abraded areas of shop paint on miscellaneous metal are specified in Division 09 painting Sections.

D. Galvanized Surfaces: Clean welds, bolted connections, and abraded areas and apply galvanizing-repair paint to comply with ASTM A 780.

END OF SECTION 220529

22 05 53

IDENTIFICATION FOR PLUMBING PIPING AND EQUIPMENT

PART 1 - GENERAL

1.01 RELATED DOCUMENTS

A. Drawings and general provisions of the Contract, including General and Supplementary Conditions and Division 01 Specification Sections, apply to this Section.

1.02 SUMMARY

A. Section Includes:

1. Equipment labels.
2. Warning signs and labels.
3. Pipe labels.
4. Stencils.
5. Valve tags.
6. Warning tags.

1.03 RELATED SECTIONS:

A. Section 013300 Submittals.

B. Section 01524 Construction Waste Management

C. Section 01352 LEED Requirements

D. Section 01611 Environmental Management

E. Section 01570 Pollution Prevention and Control

1.04 SUBMITTALS

A. Product Data: For each type of product indicated.

B. Samples: For color, letter style, and graphic representation required for each identification material and device.

C. Equipment Label Schedule: Include a listing of all equipment to be labeled with the proposed content for each label.

D. Valve numbering scheme.

E. Valve Schedules: For each piping system to include in maintenance manuals.

F. Product data. Unless otherwise indicated, submit the following for each type of product provided under work of this Section:

1. Recycled Content:

   a. Indicate recycled content; indicate percentage of pre-consumer and post-consumer recycled content per unit of product.

2. Local/Regional Materials:

   a. Indicate location of manufacturing facility; indicate distance between manufacturing facility and the project site.

   b. Indicate location of extraction, harvesting, and recovery; indicate distance between extraction, harvesting, and recovery and the project site.

3. VOC data:

   a. Submit manufacturer's product data for joint compounds. Indicate VOC and chemical component limits of the product. Submit MSDS highlighting VOC and chemical component limits. VOC contents and chemical component limits must be less than the limits of Green Seal's Standard GS-11.

   b. Submit manufacturer's certification that products comply with Green Seal's Standard GS-11

   c. Submit environmental data in accordance with Table 1 of ASTM E2129 for products provided under work of this Section.

4. Submit the following according to Conditions of the Construction Contract.

   a. Product data. Unless otherwise indicated, submit the following for each type of product provided under work of this Section:

5. General: Submit additional LEED submittal requirements included in other sections of the Specifications.

6. LEED submittals are in addition to other submittals. If submitted item is identical to that submitted to comply with other requirements, submit duplicate copies as a separate submittal to verify compliance with indicated LEED requirements.

1.05 COORDINATION

A. Coordinate installation of identifying devices with completion of covering and painting of surfaces where devices are to be applied.

B. Coordinate installation of identifying devices with locations of access panels and doors.

C. Install identifying devices before installing acoustical ceilings and similar concealment.

PART 2 - PRODUCTS

2.01 ENVIRONMENTALLY PREFERABLE PRODUCTS

A. Provide environmentally preferable products to the greatest extent possible.

1. To the greatest extent possible, provide products and materials that promote stewardship of the earth's resources, promote good indoor environmental quality (IEQ), and promote efficiencies in operational performance.

B. Provide products listed on the EPA Comprehensive Procurement Guidelines to the greatest extent practicable.

C. Provide products listed on the USGBC Directory of Products and Services to the greatest extent possible.

2.02 RECYCLED CONTENT

A. Provide recycled content products to the greatest extent possible.

1. To the greatest extent possible, provide materials with recycled content such that the sum of post-consumer recycled content plus one-half of the post-industrial content constitutes at least 10% of the total value of the materials in the project.

2.03 REGIONAL MATERIALS

A. Provide Regional materials and products to the greatest extent possible that are extracted and manufactured within the region.

1. Provide materials and products that use a minimum of 20 % of building products that are manufactured regionally within a radius of 500 miles from the project site.

a. Manufacturing refers to the final assembly of components into the building product that is furnished and installed by the tradesman.

2. Of the regionally manufactured materials used and documented, use a minimum of 50% of building materials and products that are extracted, harvested or recovered (as well as manufactured) within 500 miles of the project site.

2.04 EQUIPMENT LABELS

A. Metal Labels for Equipment:

1. Material and Thickness: Brass, 0.032-inch minimum thickness, and having predrilled or stamped holes for attachment hardware.

2. Minimum Label Size: Length and width vary for required label content, but not less than 2-1/2 by 3/4 inch.

3. Minimum Letter Size: 1/4 inch for name of units if viewing distance is less than 24 inches, 1/2 inch for viewing distances up to 72 inches, and proportionately larger lettering

for greater viewing distances. Include secondary lettering two-thirds to three-fourths the size of principal lettering.

4. Fasteners: Stainless-steel rivets or self-tapping screws.

5. Adhesive: Contact-type permanent adhesive, compatible with label and with substrate.

B. Plastic Labels for Equipment:

1. Material and Thickness: Multilayer, multicolor, plastic labels for mechanical engraving, 1/8 inch thick, and having predrilled holes for attachment hardware.

2. Letter Color: White.

3. Background Color: Black.

4. Maximum Temperature: Able to withstand temperatures up to 160 deg F.

5. Minimum Label Size: Length and width vary for required label content, but not less than 2-1/2 by 3/4 inch.

6. Minimum Letter Size: 1/4 inch for name of units if viewing distance is less than 24 inches, 1/2 inch for viewing distances up to 72 inches, and proportionately larger lettering for greater viewing distances. Include secondary lettering two-thirds to three-fourths the size of principal lettering.

7. Fasteners: Stainless-steel self-tapping screws.

8. Adhesive: Contact-type permanent adhesive, compatible with label and with substrate.

C. Label Content: Include equipment's Drawing designation or unique equipment number, Drawing numbers where equipment is indicated (plans, details, and schedules), plus the Specification Section number and title where equipment is specified.

D. Equipment Label Schedule: For each item of equipment to be labeled, on 8-1/2-by-11-inch bond paper. Tabulate equipment identification number and identify Drawing numbers where equipment is indicated (plans, and schedules), plus the Specification Section number and title where equipment is specified. Equipment schedule shall be included in operation and maintenance data.

2.05 WARNING SIGNS AND LABELS

A. Material and Thickness: Multilayer, multicolor, plastic labels for mechanical engraving, 1/8 inch thick, and having predrilled holes for attachment hardware.

B. Letter Color: White.

C. Background Color: Red.

D. Maximum Temperature: Able to withstand temperatures up to 160 deg F.

E. Minimum Label Size: Length and width vary for required label content, but not less than 2-1/2 by 3/4 inch.

F. Minimum Letter Size: 1/4 inch for name of units if viewing distance is less than 24 inches, 1/2 inch for viewing distances up to 72 inches, and proportionately larger lettering for greater viewing distances. Include secondary lettering two-thirds to three-fourths the size of principal lettering.

G. Fasteners: Stainless-steel self-tapping screws.

H. Adhesive: Contact-type permanent adhesive, compatible with label and with substrate.

I. Label Content: Include caution and warning information, plus emergency notification instructions.

2.06 PIPE LABELS

A. Do not use pipe labels or plastic tapes for bare pipes conveying fluids at temperatures of 125 deg F (52 deg C) or higher.

B. General Requirements for Manufactured Pipe Labels: Preprinted, color-coded, with lettering indicating service, and showing flow direction.

C. Pre-tensioned Pipe Labels: Pre-coiled, semi-rigid plastic formed to cover full circumference of pipe and to attach to pipe without fasteners or adhesive.

D. Self-Adhesive Pipe Labels: Printed plastic with contact-type, permanent-adhesive backing.

E. Pipe Label Contents: Include identification of piping service using same designations or abbreviations as used on Drawings, pipe size, and an arrow indicating flow direction.

1. Flow-Direction Arrows: Integral with piping system service lettering to accommodate both directions or as separate unit on each pipe label to indicate flow direction.

2. Lettering Size: At least 1-1/2 inches high.

2.07 STENCILS

A. Stencils: Prepared with letter sizes according to ASME A13.1 for piping; and minimum letter height of 3/4 inch for access panel and door labels, equipment labels, and similar operational instructions.

1. Stencil Material: Fiberboard or metal.

2. Stencil Paint: Exterior, gloss, acrylic enamel black unless otherwise indicated. Paint may be in pressurized spray-can form.

3. Identification Paint: Exterior, acrylic enamel in colors according to ASME A13.1 unless otherwise indicated.

2.08 VALVE TAGS

A. Valve Tags: Stamped or engraved with 1/4-inch letters for piping system abbreviation and 1/2-inch (13-mm) numbers.

1. Tag Material: Brass, 0.032-inch Stainless steel, 0.025-inch Aluminum, 0.032-inch or anodized aluminum, 0.032-inch minimum thickness, and having predrilled or stamped holes for attachment hardware.

2. Fasteners: Brass wire-link or beaded chain; or S-hook wire-link chain beaded chain S-hook.

B. Valve Schedules: For each piping system, on 8-1/2-by-11-inch bond paper. Tabulate valve number, piping system, system abbreviation (as shown on valve tag), location of valve (room or space), normal-operating position (open, closed, or modulating), and variations for identification. Mark valves for emergency shutoff and similar special uses.

1. Valve-tag schedule shall be included in operation and maintenance data.

2.09 WARNING TAGS

A. Warning Tags: Preprinted or partially preprinted, accident-prevention tags, of plasticized card stock with matte finish suitable for writing.

1. Size: 3 by 5-1/4 inches minimum.

2. Fasteners: Reinforced grommet and wire or string.

3. Nomenclature: Large-size primary caption such as "DANGER," "CAUTION," or "DO NOT OPERATE."

4. Color: Yellow background with black lettering.

PART 3 - EXECUTION

3.01 PREPARATION

A. Clean piping and equipment surfaces of substances that could impair bond of identification devices, including dirt, oil, grease, release agents, and incompatible primers, paints, and encapsulates.

3.02 EQUIPMENT LABEL INSTALLATION

A. Install or permanently fasten labels on each major item of mechanical equipment.

B. Locate equipment labels where accessible and visible.

3.03 PIPE LABEL INSTALLATION

A. Piping Color-Coding: Painting of piping is specified in Division 09.

B. Stenciled Pipe Label Option: Stenciled labels may be provided instead of manufactured pipe labels, at Installer's option. Install stenciled pipe labels color-coded bands or rectangles complying with ASME A13.1 on each piping system.

1. Identification Paint: Use for contrasting background.

2. Stencil Paint: Use for pipe marking.

C. Locate pipe labels where piping is exposed or above accessible ceilings in finished spaces; machine rooms; accessible maintenance spaces such as shafts, tunnels, and plenums; and exterior exposed locations as follows:

1. Near each valve and control device.

2. Near each branch connection, excluding short takeoffs for fixtures and terminal units. Where flow pattern is not obvious, mark each pipe at branch.

3. Near penetrations through walls, floors, ceilings, and inaccessible enclosures.

4. At access doors, manholes, and similar access points that permit view of concealed piping.

5. Near major equipment items and other points of origination and termination.

6. Spaced at maximum intervals of 50 feet along each run. Reduce intervals to 25 feet in areas of congested piping and equipment.

7. On piping above removable acoustical ceilings. Omit intermediately spaced labels.

D. Pipe Label Color Schedule:

1. Domestic Water Piping:

a. Background Color: Blue.

b. Letter Color: Black.

2. Sanitary Waste and Storm Drainage Piping:

a. Background Color: Blue.

b. Letter Color: White.

3.04 VALVE-TAG INSTALLATION

A. Install tags on valves and control devices in piping systems, except check valves; valves within factory-fabricated equipment units; shutoff valves; faucets; convenience and lawn-watering hose connections; and similar roughing-in connections of end-use fixtures and units. List tagged valves in a valve schedule.

B. Valve-Tag Application Schedule: Tag valves according to size, shape, and color scheme and with captions similar to those indicated in the following subparagraphs:

1. Other valve-tag sizes, shapes, colors, and letter colors may be available if required.

2. Valve-Tag Size and Shape:

a. Cold Water: 1-1/2 inches, round.

b. Hot Water: 1-1/2 inches, round.

c. Low-Pressure Compressed Air: 1-1/2 inches, round.

3. Select contrasting valve-tag color and letter color in two subparagraphs below for each service. Retain "Natural" option for brass or stainless-steel valve tags.

4. Valve-Tag Color:

a. Cold Water: Natural.

b. Hot Water: Natural.

5. Letter Color:

a. Cold Water: Black.

b. Hot Water: Black.

3.05 WARNING-TAG INSTALLATION

A. Write required message on, and attach warning tags to, equipment and other items where required.

END OF SECTION 220553

22 07 00

PLUMBING INSULATION

PART 1 - GENERAL

1.01 RELATED DOCUMENTS

A. Drawings and general provisions of the Contract, including General and Supplementary Conditions and Division 01 Specification Sections, apply to this Section.

1.02 SUMMARY

A. Section Includes:

1. Insulation Materials:
   a. Cellular glass.
   b. Flexible elastomeric.
   c. Mineral fiber.
   d. Phenolic.
2. Insulating cements.
3. Adhesives.
4. Mastics.
5. Lagging adhesives.
6. Sealants.
7. Factory-applied jackets.
8. Field-applied jackets.
9. Tapes.
10. Securements.
11. Corner angles.

B. Related Sections include the following:

1. Section 013300 Submittals.
2. Section 01524 Construction Waste Management

3. Section 01352 LEED Requirements

4. Section 01611 Environmental Management

5. Section 01570 Pollution Prevention and Control

1.03 SUBMITTALS

A. Product Data: For each type of product indicated. Include thermal conductivity, thickness, and jackets (both factory and field applied, if any).

B. LEED Submittal:

1. Product Data for Credit EQ 4.1: For adhesives and sealants, including printed statement of VOC content.

C. Shop Drawings:

1. Detail application of protective shields, saddles, and inserts at hangers for each type of insulation and hanger.

2. Detail attachment and covering of heat tracing inside insulation.

3. Detail insulation application at pipe expansion joints for each type of insulation.

4. Detail insulation application at elbows, fittings, flanges, valves, and specialties for each type of insulation.

5. Detail removable insulation at piping specialties, equipment connections, and access panels.

6. Detail application of field-applied jackets.

7. Detail application at linkages of control devices.

8. Detail field application for each equipment type.

D. Samples: For each type of insulation and jacket indicated. Identify each Sample, describing product and intended use. Sample sizes are as follows:

1. Sample Sizes:

a. Preformed Pipe Insulation Materials: 12 inches long by NPS 2.

b. Sheet Form Insulation Materials: 12 inches square.

c. Jacket Materials for Pipe: 12 inches long by NPS 2.

d. Sheet Jacket Materials: 12 inches square.

e. Manufacturer's Color Charts: For products where color is specified, show the full range of colors available for each type of finish material.

E. Qualification Data: For qualified Installer.

F. Material Test Reports: From a qualified testing agency acceptable to authorities having jurisdiction indicating, interpreting, and certifying test results for compliance of insulation materials, sealers, attachments, cements, and jackets, with requirements indicated. Include dates of tests and test methods employed.

G. Field quality-control reports.

H. Product data. Unless otherwise indicated, submit the following for each type of product provided under work of this Section:

1. Recycled Content:

a. Indicate recycled content; indicate percentage of pre-consumer and post-consumer recycled content per unit of product.

2. Local/Regional Materials:

a. Indicate location of manufacturing facility; indicate distance between manufacturing facility and the project site.

b. Indicate location of extraction, harvesting, and recovery; indicate distance between extraction, harvesting, and recovery and the project site.

3. VOC data:

a. Submit manufacturer's product data for joint compounds. Indicate VOC and chemical component limits of the product. Submit MSDS highlighting VOC and chemical component limits. VOC contents and chemical component limits must be less than the limits of Green Seal’s Standard GS-11.

b. Submit manufacturer’s certification that products comply with Green Seal’s Standard GS-11

c. Submit environmental data in accordance with Table 1 of ASTM E2129 for products provided under work of this Section.

4. Submit the following according to Conditions of the Construction Contract.

a. Product data. Unless otherwise indicated, submit the following for each type of product provided under work of this Section:

5. General: Submit additional LEED submittal requirements included in other sections of the Specifications.

6. LEED submittals are in addition to other submittals. If submitted item is identical to that submitted to comply with other requirements, submit duplicate copies as a separate submittal to verify compliance with indicated LEED requirements.

1.04 QUALITY ASSURANCE

A. Installer Qualifications: Skilled mechanics who have successfully completed an apprenticeship program or another craft training program certified by the Department of Labor, Bureau of Apprenticeship and Training.

B. Fire-Test-Response Characteristics: Insulation and related materials shall have fire-test-response characteristics indicated, as determined by testing identical products per ASTM E 84, by a testing and inspecting agency acceptable to authorities having jurisdiction. Factory label insulation and jacket materials and adhesive, mastic, tapes, and cement material containers, with appropriate markings of applicable testing and inspecting agency.

1. Insulation Installed Indoors: Flame-spread index of 25 or less, and smoke-developed index of 50 or less.

2. Insulation Installed Outdoors: Flame-spread index of 75 or less, and smoke-developed index of 150 or less.

C. Mockups: Before installing insulation, build mockups for each type of insulation and finish listed below to demonstrate quality of insulation application and finishes. Build mockups in the location indicated or, if not indicated, as directed by Architect. Use materials indicated for the completed Work.

1. Piping Mockups:

a. One 10-foot section of NPS 2 straight pipe.

b. One each of a 90-degree threaded, welded, and flanged elbow.

c. One each of a threaded, welded, and flanged tee fitting.

d. One NPS 2 or smaller valve, and one NPS 2-1/2 or larger valve.

e. Four support hangers including hanger shield and insert.

f. One threaded strainer and one flanged strainer with removable portion of insulation.

g. One threaded reducer and one welded reducer.

h. One pressure temperature tap.

i. One mechanical coupling.

2. Equipment Mockups: One tank or vessel.

3. For each mockup, fabricate cutaway sections to allow observation of application details for insulation materials, adhesives, mastics, attachments, and jackets.

4. Notify Architect seven days in advance of dates and times when mockups will be constructed.

5. Obtain Architect's approval of mockups before starting insulation application.

6. Approval of mockups does not constitute approval of deviations from the Contract Documents contained in mockups unless Architect specifically approves such deviations in writing.

7. Maintain mockups during construction in an undisturbed condition as a standard for judging the completed Work.

8. Demolish and remove mockups when directed.

1.05 DELIVERY, STORAGE, AND HANDLING

A. Packaging: Insulation material containers shall be marked by manufacturer with appropriate ASTM standard designation, type and grade, and maximum use temperature.

1.06 COORDINATION

A. Coordinate size and location of supports, hangers, and insulation shields specified in Division 22 Section "Hangers and Supports for Plumbing Piping and Equipment."

B. Coordinate clearance requirements with piping Installer for piping insulation application and equipment Installer for equipment insulation application. Before preparing piping Shop Drawings, establish and maintain clearance requirements for installation of insulation and field-applied jackets and finishes and for space required for maintenance.

C. Coordinate installation and testing of heat tracing.

1.07 SCHEDULING

A. Schedule insulation application after pressure testing systems and, where required, after installing and testing heat tracing. Insulation application may begin on segments that have satisfactory test results.

B. Complete installation and concealment of plastic materials as rapidly as possible in each area of construction.

PART 2 - PRODUCTS

2.01 ENVIRONMENTALLY PREFERABLE PRODUCTS

A. Provide environmentally preferable products to the greatest extent possible.

1. To the greatest extent possible, provide products and materials that promote stewardship of the earth's resources, promote good indoor environmental quality (IEQ), and promote efficiencies in operational performance.

B. Provide products listed on the EPA Comprehensive Procurement Guidelines to the greatest extent practicable.

C. Provide products listed on the USGBC Directory of Products and Services to the greatest extent possible.

2.02 RECYCLED CONTENT

A. Provide recycled content products to the greatest extent possible.

1. To the greatest extent possible, provide materials with recycled content such that the sum of post-consumer recycled content plus one-half of the post-industrial content constitutes at least 10% of the total value of the materials in the project.

2.03 REGIONAL MATERIALS

A. Provide Regional materials and products to the greatest extent possible that are extracted and manufactured within the region.

1. Provide materials and products that use a minimum of 20 % of building products that are manufactured regionally within a radius of 500 miles from the project site.

a. Manufacturing refers to the final assembly of components into the building product that is furnished and installed by the tradesman.

2. Of the regionally manufactured materials used and documented, use a minimum of 50% of building materials and products that are extracted, harvested or recovered (as well as manufactured) within 500 miles of the project site.

2.04 INSULATION MATERIALS

A. Manufacturer: Subject to compliance with requirements, provide products of one of the following:

1. Armstrong World Industries, Inc.

2. Certainteed Corp.

3. Knauf Fiber Glass GmbH.

4. Owens-Corning Fiberglas Corp.

5. Pittsburgh Corning Corp.

6. FGH Fabricators, Inc.

B. Adhesives shall be as manufactured by Minnesota Mining, Arabol, Benjamin-Foster, Armstrong, or Insulmastic, Inc., and shall have the same adhesive properties, fire rating, vapor seal, etc., as the types specified herein, subject to review by the Engineer.

2.05 PIPING INSULATION MATERIALS

A. Fiberglass Piping Insulation: ASTM C 547, Class 1 unless otherwise indicated. (Indoor locations).

B. Foam Glass Insulation: ASTM C552-07, class 1 for all outdoor installation / applications.

C. Jackets for Piping Insulation: ASTM C 921, Type I (vapor barrier) for piping with temperatures below ambient, Type II (water vapor permeable) for piping with temperatures above ambient. Type I may be used for all piping at Installers option.

1. Encase pipe fittings insulation with one-piece pre-molded 16 MIL aluminum fitting covers, fastened as per manufacturer's recommendations.

2. Encase exterior piping insulation with 16 MIL aluminum jacket with "Z" closures for weather-proof construction.

D. Staples, Bands, Wires, and Cement: As recommended by insulation manufacturer for applications indicated.

E. Adhesives, Sealers, and Protective Finishes: As recommended by insulation manufacturer for applications indicated. White all service jacket "ASJ" vapor barrier with dual self-seal strips for all insulation except flexible unicellular.

2.06 INSULATING CEMENTS

A. Mineral-Fiber Insulating Cement: Comply with ASTM C 195.

1. Products: Subject to compliance with requirements, provide one of the following:

a. Insulco, Division of MFS, Inc.; Triple I.

b. P. K. Insulation Mfg. Co., Inc.; Super-Stik.

B. Expanded or Exfoliated Vermiculite Insulating Cement: Comply with ASTM C 196.

1. Products: Subject to compliance with requirements, provide one of the following:

a. P. K. Insulation Mfg. Co., Inc.; Thermal-V-Kote.

C. Mineral-Fiber, Hydraulic-Setting Insulating and Finishing Cement: Comply with ASTM C 449/C 449M.

1. Products: Subject to compliance with requirements, provide one of the following:

a. Insulco, Division of MFS, Inc.; SmoothKote.

b. P. K. Insulation Mfg. Co., Inc.; PK No. 127, and Quik-Cote.

c. Rock Wool Manufacturing Company; Delta One Shot.

2.07 ADHESIVES

A. Materials shall be compatible with insulation materials, jackets, and substrates and for bonding insulation to itself and to surfaces to be insulated, unless otherwise indicated.

B. Cellular-Glass, Phenolic, Polyisocyanurate, and Polystyrene Adhesive: Solvent-based resin adhesive, with a service temperature range of minus 75 to plus 300 deg F.

1. Products: Subject to compliance with requirements, provide one of the following:

a. Childers Products, Division of ITW; CP-96.

b. Foster Products Corporation, H. B. Fuller Company; 81-33.

2. For indoor applications, use adhesive that has a VOC content of 50 g/L or less when calculated according to 40 CFR 59, Subpart D (EPA Method 24).

C. Flexible Elastomeric and Polyolefin Adhesive: Comply with MIL-A-24179A, Type II, Class I.

1. Products: Subject to compliance with requirements, provide one of the following:

a. Aeroflex USA Inc.; Aeroseal.

b. Armacell LCC; 520 Adhesive.

c. Foster Products Corporation, H. B. Fuller Company; 85-75.

d. RBX Corporation; Rubatex Contact Adhesive.

2. For indoor applications, use adhesive that has a VOC content of 50 g/L or less when calculated according to 40 CFR 59, Subpart D (EPA Method 24).

D. Mineral-Fiber Adhesive: Comply with MIL-A-3316C, Class 2, Grade A.

1. Products: Subject to compliance with requirements, provide one of the following:

a. Childers Products, Division of ITW; CP-82.

b. Foster Products Corporation, H. B. Fuller Company; 85-20.

c. ITW TACC, Division of Illinois Tool Works; S-90/80.

d. Marathon Industries, Inc.; 225.

e. Mon-Eco Industries, Inc.; 22-25.

2. For indoor applications, use adhesive that has a VOC content of 80 g/L or less when calculated according to 40 CFR 59, Subpart D (EPA Method 24).

E. Polystyrene Adhesive: Solvent- or water-based, synthetic resin adhesive with a service temperature range of minus 20 to plus 140 deg F.

1. Products: Subject to compliance with requirements, provide one of the following:

a. Childers Products, Division of ITW; CP-96.

b. Foster Products Corporation, H. B. Fuller Company; 97-13.

F. ASJ Adhesive, and FSK and PVDC Jacket Adhesive: Comply with MIL-A-3316C, Class 2, Grade A for bonding insulation jacket lap seams and joints.

1. Products: Subject to compliance with requirements, provide one of the following:

a. Childers Products, Division of ITW; CP-82.

b. Foster Products Corporation, H. B. Fuller Company; 85-20.

c. ITW TACC, Division of Illinois Tool Works; S-90/80.

d. Marathon Industries, Inc.; 225.

e. Mon-Eco Industries, Inc.; 22-25.

2. For indoor applications, use adhesive that has a VOC content of 50 g/L or less when calculated according to 40 CFR 59, Subpart D (EPA Method 24).

G. PVC Jacket Adhesive: Compatible with PVC jacket.

1. Products: Subject to compliance with requirements, provide one of the following:

a. Dow Chemical Company (The); 739, Dow Silicone.

b. Johns-Manville; Zeston Perma-Weld, CEEL-TITE Solvent Welding Adhesive.

c. P.I.C. Plastics, Inc.; Welding Adhesive.

d. Speedline Corporation; Speedline Vinyl Adhesive.

2. For indoor applications, use adhesive that has a VOC content of 50 g/L or less when calculated according to 40 CFR 59, Subpart D (EPA Method 24).

2.08 MASTICS

A. Materials shall be compatible with insulation materials, jackets, and substrates; comply with MIL-C-19565C, Type II.

B. Vapor-Barrier Mastic: Water based; suitable for indoor and outdoor use on below ambient services.

1. Products: Subject to compliance with requirements, provide one of the following:

a. Childers Products, Division of ITW; CP-35.

b. Foster Products Corporation, H. B. Fuller Company; 30-90.

c. ITW TACC, Division of Illinois Tool Works; CB-50.

d. Marathon Industries, Inc.; 590.

e. Mon-Eco Industries, Inc.; 55-40.

f. Vimasco Corporation; 749.

2. Water-Vapor Permeance: ASTM E 96, Procedure B, 0.013 perm at 43-mil dry film thickness.

3. Service Temperature Range: Minus 20 to plus 180 deg F.

4. Solids Content: ASTM D 1644, 59 percent by volume and 71 percent by weight.

5. Color: White.

C. Vapor-Barrier Mastic: Solvent based; suitable for indoor use on below ambient services.

1. Products: Subject to compliance with requirements, provide one of the following:

a. Childers Products, Division of ITW; CP-30.

b. Foster Products Corporation, H. B. Fuller Company; 30-35.

c. ITW TACC, Division of Illinois Tool Works; CB-25.

d. Marathon Industries, Inc.; 501.

e. Mon-Eco Industries, Inc.; 55-10.

2. Water-Vapor Permeance: ASTM F 1249, 0.05 perm at 35-mil dry film thickness.

3. Service Temperature Range: 0 to 180 deg F.

4. Solids Content: ASTM D 1644, 44 percent by volume and 62 percent by weight.

5. Color: White.

D. Vapor-Barrier Mastic: Solvent based; suitable for outdoor use on below ambient services.

1. Products: Subject to compliance with requirements, provide the following:

a. Childers Products, Division of ITW; Encacel.

b. Foster Products Corporation, H. B. Fuller Company; 60-95/60-96.

c. Marathon Industries, Inc.; 570.

d. Mon-Eco Industries, Inc.; 55-70.

2. Water-Vapor Permeance: ASTM F 1249, 0.05 perm at 30-mil dry film thickness.

3. Service Temperature Range: Minus 50 to plus 220 deg F.

4. Solids Content: ASTM D 1644, 33 percent by volume and 46 percent by weight.

5. Color: White.

E. Breather Mastic: Water based; suitable for indoor and outdoor use on above ambient services.

1. Products: Subject to compliance with requirements, provide the following:

a. Childers Products, Division of ITW; CP-10.

b. Foster Products Corporation, H. B. Fuller Company; 35-00.

c. ITW TACC, Division of Illinois Tool Works; CB-05/15.

d. Marathon Industries, Inc.; 550.

e. Mon-Eco Industries, Inc.; 55-50.

f. Vimasco Corporation; WC-1/WC-5.

2. Water-Vapor Permeance: ASTM F 1249, 3 perms at 0.0625-inch dry film thickness.

3. Service Temperature Range: Minus 20 to plus 200 deg F.

4. Solids Content: 63 percent by volume and 73 percent by weight.

5. Color: White.

2.09 PLUMBING PIPING SYSTEM INSULATION

A. Insulation Omitted: Omit insulation on chrome-plated exposed piping (except for handicapped fixtures), air chambers, unions, strainers, check valves, balance cocks, flow regulators, buried piping, fire protection piping, and pre- insulated equipment.

2.10 EQUIPMENT INSULATION SCHEDULE

A. Insulation materials and thicknesses are identified below. If more than one material is listed for a type of equipment, selection from materials listed is Contractor's option.

B. Insulate indoor and outdoor equipment in paragraphs below that is not factory insulated.

C. Domestic hot-water pump insulation shall be one of the following:

a. Cellular Glass: 2 inches thick.

b. Phenolic: 1 inch thick.

D. Domestic cold water, and domestic hot-water hydro-pneumatic tank insulation shall be one of the following:

a. Cellular Glass: 1-1/2 inches thick.

b. Flexible Elastomeric: 1 inch thick.

c. Mineral-Fiber Pipe and Tank: 1 inch thick.

E. Domestic hot-water storage tank insulation shall be one of the following, of thickness to provide an R-value of 12.5:

1. Cellular glass.

2. Mineral-fiber pipe and tank.

3. Phenolic.

2.11 PIPING INSULATION SCHEDULE, GENERAL

A. Acceptable preformed pipe and tubular insulation materials and thicknesses are identified for each piping system and pipe size range. If more than one material is listed for a piping system, selection from materials listed is Contractor's option.

B. Items Not Insulated: Unless otherwise indicated, do not install insulation on the following:

1. Drainage piping located in crawl spaces.

2. Underground piping.

3. Chrome-plated pipes and fittings unless there is a potential for personnel injury.

2.12 INDOOR PIPING INSULATION SCHEDULE

A. Domestic Cold Water:

1. NPS 1 and Smaller: Insulation shall be one of the following:

a. Cellular Glass: 1-1/2 inches thick.

b. Flexible Elastomeric: 1 inch thick.

2. NPS 1-1/4 and Larger: Insulation shall be one of the following:

a. Cellular Glass: 1-1/2 inches thick.

b. Flexible Elastomeric: 1 inch thick.

B. Domestic Hot water and Re-circulated Hot Water:

1. NPS 1-1/4 and Smaller: Insulation shall be one of the following:

a. Cellular Glass: 1-1/2 inches thick.

b. Flexible Elastomeric: 1 inch thick.

2. NPS 1-1/2 and Larger: Insulation shall be one of the following:

a. Cellular Glass: 1-1/2 inches thick.

b. Flexible Elastomeric: 1 inch thick.

C. Storm water and Overflow:

1. All Pipe Sizes: Insulation shall be one of the following:

a. Cellular Glass: 1-1/2 inches thick.

b. Flexible Elastomeric: 1 inch thick.

D. Roof Drain and Overflow Drain Bodies:

1. All Pipe Sizes: Insulation shall be one of the following:

a. Cellular Glass: 1-1/2 inches thick.

b. Flexible Elastomeric: 1 inch thick.

E. Exposed Sanitary Drains, Domestic Water, Domestic Hot Water, and Stops for Plumbing Fixtures for People with Disabilities:

1. All Pipe Sizes: Insulation shall be one of the following:

a. Flexible Elastomeric: 3/4 inch thick.

b. Polyolefin: 3/4 inch thick.

F. Condensate and Equipment Drain Water below 60 Deg F:

1. All Pipe Sizes: Insulation shall be one of the following:

a. Cellular Glass: 1-1/2 inches thick.

b. Flexible Elastomeric: 1 inch thick.

G. Floor Drains, Traps, and Sanitary Drain Piping within 10 Feet of Drain Receiving Condensate and Equipment Drain Water below 60 Deg F:

1. All Pipe Sizes: Insulation shall be one of the following:

   a. Cellular Glass: 1-1/2 inches thick.

   b. Flexible Elastomeric: 1 inch thick.

2.13 INDOOR, FIELD-APPLIED JACKET SCHEDULE

A. Install jacket over insulation material. For insulation with factory-applied jacket, install the field-applied jacket over the factory-applied jacket.

B. If more than one material is listed, selection from materials listed is Contractor's option.

C. Equipment, Exposed, up to 48 Inches in Diameter or with Flat Surfaces up to 72 Inches:

D. Piping, Exposed:

1. PVC, Color-Coded by System: 20 mils 30 mils thick.

2. Aluminum, Smooth 0.024 inch thick.

2.14 OUTDOOR, FIELD-APPLIED JACKET SCHEDULE

A. Install jacket over insulation material. For insulation with factory-applied jacket, install the field-applied jacket over the factory-applied jacket.

B. If more than one material is listed, selection from materials listed is Contractor's option.

C. Equipment, Exposed, up to 48 Inches in Diameter or with Flat Surfaces up to 72 Inches:

1. Aluminum, Smooth with Z-Shaped Locking Seam: 0.024 inch thick.

D. Piping, Exposed:

1. Aluminum, Smooth with Z-Shaped Locking Seam: 0.024 inch thick.

2.15 UNDERGROUND, FIELD-INSTALLED INSULATION JACKET

A. For underground direct-buried piping applications, install underground direct-buried jacket over insulation material.

END OF SECTION 220700

22 11 16

DOMESTIC WATER PIPING

PART 1 - GENERAL

1.01 RELATED DOCUMENTS

A. Drawings and general provisions of the Contract, including General and Supplementary Conditions and Division 01 Specification Sections, apply to this Section.

1.02 SUMMARY

A. Section Includes:

1. Under-building slab and aboveground domestic water pipes, tubes, fittings, and specialties inside the building.

2. Encasement for piping.

3. Specialty valves.

4. Flexible connectors.

5. Water meters.

6. Escutcheons.

7. Sleeves and sleeve seals.

8. Wall penetration systems.

B. Related Sections:

1. Section 013300 Submittals.

2. Section 01524 Construction Waste Management

3. Section 01352 LEED Requirements

4. Section 01611 Environmental Management

5. Section 01570 Pollution Prevention and Control

1.03 SUBMITTALS

A. Product Data: For the following products:

1. Specialty valves.

2. Transition fittings.

3. Dielectric fittings.

4. Flexible connectors.

5. Backflow preventers and vacuum breakers.

6. Escutcheons.

7. Sleeves and sleeve seals.

8. Water penetration systems.

B. Water Samples: Specified in "Cleaning" Article.

C. Coordination Drawings: For piping in equipment rooms and other congested areas, drawn to scale, on which the following items are shown and coordinated with each other, using input from Installers of the items involved:

1. Fire-suppression-water piping.

2. Domestic water piping.

3. Natural Gas piping.

D. Field quality-control reports.

E. Product data. Unless otherwise indicated, submit the following for each type of product provided under work of this Section:

1. Recycled Content:

a. Indicate recycled content; indicate percentage of pre-consumer and post-consumer recycled content per unit of product.

2. Local/Regional Materials:

a. Indicate location of manufacturing facility; indicate distance between manufacturing facility and the project site.

b. Indicate location of extraction, harvesting, and recovery; indicate distance between extraction, harvesting, and recovery and the project site.

3. VOC data:

a. Submit manufacturer's product data for joint compounds. Indicate VOC and chemical component limits of the product. Submit MSDS highlighting VOC and chemical component limits. VOC contents and chemical component limits must be less than the limits of Green Seal’s Standard GS-11.

b. Submit manufacturer’s certification that products comply with Green Seal’s Standard GS-11

c. Submit environmental data in accordance with Table 1 of ASTM E2129 for products provided under work of this Section.

4. Submit the following according to Conditions of the Construction Contract.

a. Product data. Unless otherwise indicated, submit the following for each type of product provided under work of this Section:

5. General: Submit additional LEED submittal requirements included in other sections of the Specifications.

6. LEED submittals are in addition to other submittals. If submitted item is identical to that submitted to comply with other requirements, submit duplicate copies as a separate submittal to verify compliance with indicated LEED requirements.

1.04 QUALITY ASSURANCE

A. Piping materials shall bear label, stamp, or other markings of specified testing agency.

B. Comply with NSF 14 for plastic, potable domestic water piping and components. Include marking "NSF-pw" on piping.

C. Comply with NSF 61 for potable domestic water piping and components.

1.05 COORDINATION

A. Coordinate sizes and locations of concrete bases with actual equipment provided.

PART 2 - PRODUCTS

2.01 ENVIRONMENTALLY PREFERABLE PRODUCTS

A. Provide environmentally preferable products to the greatest extent possible.

1. To the greatest extent possible, provide products and materials that promote stewardship of the earth's resources, promote good indoor environmental quality (IEQ), and promote efficiencies in operational performance.

B. Provide products listed on the EPA Comprehensive Procurement Guidelines to the greatest extent practicable.

C. Provide products listed on the USGBC Directory of Products and Services to the greatest extent possible.

2.02 RECYCLED CONTENT

A. Provide recycled content products to the greatest extent possible.

1. To the greatest extent possible, provide materials with recycled content such that the sum of post-consumer recycled content plus one-half of the post-industrial content constitutes at least 10% of the total value of the materials in the project.

2.03 REGIONAL MATERIALS

A. Provide Regional materials and products to the greatest extent possible that are extracted and manufactured within the region.

1. Provide materials and products that use a minimum of 20 % of building products that are manufactured regionally within a radius of 500 miles from the project site.

a. Manufacturing refers to the final assembly of components into the building product that is furnished and installed by the tradesman.

2. Of the regionally manufactured materials used and documented, use a minimum of 50% of building materials and products that are extracted, harvested or recovered (as well as manufactured) within 500 miles of the project site.

2.04 WATER SUPPLY SYSTEM:

A. A complete system of hot and cold water supply to all plumbing fixtures and mechanical equipment shall be supplied and installed as shown on the Drawings. The water supply system shall be installed using the materials and methods as specified in the following paragraphs.

B. UNDERGROUND WATER PIPING SYSTEMS:

1. Pipe: All pipe used for underground water piping mains shall be Class 52 centrifugally cast, close grained cast iron pipe or Class 50 DUCTILE iron pipe arranged with bell and spigot mechanical joints.

2. Valve Boxes:

a. For each underground valve installed by the Contractor, the Contractor shall provide and install a two-piece, screw adjustable type valve box. These valve boxes shall be designed for heavy roadway service and they shall have a deep socket type of cover which prevents their being accidentally knocked out of position.

C. The word "WATER" shall appear on each cover. The installation of these members shall be such that by the use of the adjustable screw type bodies the tops are just flush with the finished grade. These valve boxes shall be Tyler Pipe Industries #6850, or approved equal.

1. Lead: It is forbidden that lead in any form be used in any water system other than waste. If lead is used in the fabrication or installation of any water system other than waste, then ALL of the installed equipment and material, which may have come in contact with the lead, shall be marked with bright red or orange spray paint, and shall be removed from the project site. The system(s) shall then be restored and reinstalled using ALL NEW MATERIALS.

D. IRRIGATION PROVISIONS:

1. Furnish and install capped and/or valved water lines under paving, through retaining walls in paved plaza areas and as indicated on Drawings for connections and extensions under work of Section Irrigation (Sprinkler) System.

E. BUILDING ENTRANCE:

1. A metallic sleeve shall be inserted in the forms of the building wall through which the water service enters the building. The interior diameter of such sleeve shall be four inches (4") greater than the exterior diameter of the water service.

2. The water service pipe from within the building shall be extended to a point five feet outside the building wall through this sleeve. The position of the water service in this sleeve shall be concentric and the intervening space shall be packed in a flexible manner to avert the flow of water from outside of the building into the basement.

3. The interior pipe extended outside the building shall be provided with a protective wrapping of "Tape Coat" SP warmed with hand torch. This protective tape shall be applied with "half lap" coverage in strict accordance with the manufacturer's published instructions. The cast iron pipe connected to the pipe extending from the building wall shall contain two caulked joints within four feet of the union of the cast iron pipe and the interior pipe from the building.

2.05 REQUIREMENTS OF INTERIOR WATER PIPING SYSTEMS:

A. All piping shall have reducing fittings used for reducing or increasing where any change in the pipe sizes occurs. No bushing of any nature shall be allowed in piping.

B. All exposed chrome plated, polished or enameled connections from fixtures shall be put up with special care, showing no tool marks or threads at fittings, and supported by neat racks or hangers with round head screws of same material and finish.

C. Wade Shok-stop, or approved equal, sealed air chambers shall be provided in all water branches to fixtures, sized in accordance with manufacturer's recommendations, concealed, accessible, and located so as to protect each group of plumbing fixtures.

D. The fabrication of copper pipe and fittings shall in every detail conform to the recommendations and instructions of the fitting manufacturer. The tools used shall be the tools adapted to that specific purpose.

2.06 COPPER TUBE AND FITTINGS

A. Hard Copper Tube: ASTM B 88, Type L water tube, drawn temper shall be used for all domestic cold, hot water and hot water return piping up to and including 4" for above grade applications.

1. Cast-Copper Solder-Joint Fittings: ASME B16.18, pressure fittings.

2. Wrought-Copper Solder-Joint Fittings: ASME B16.22, wrought-copper pressure fittings.

3. Bronze Flanges: ASME B16.24, Class 150, with solder-joint ends.

4. Copper Unions: MSS SP-123, cast-copper-alloy, hexagonal-stock body, with ball-and-socket, metal-to-metal seating surfaces, and solder-joint or threaded ends.

B. Interior domestic water piping of 6” and larger shall be schedule 40 galvanized steel to ASTM A53.

2.07 DUCTILE-IRON PIPE AND FITTINGS (FOR UNDERGROUND USE)

A. Mechanical-Joint, Ductile-Iron Pipe: AWWA C151, with mechanical-joint bell and plain spigot end unless grooved or flanged ends are indicated.

1. Standard-Pattern, Mechanical-Joint Fittings: AWWA C110, ductile or gray iron.

2. Compact-Pattern, Mechanical-Joint Fittings: AWWA C153, ductile iron.

a. Glands, Gaskets, and Bolts: AWWA C111, ductile- or gray-iron glands, rubber gaskets, and steel bolts.

B. Push-on-Joint, Ductile-Iron Pipe: AWWA C151, with push-on-joint bell and plain spigot end unless grooved or flanged ends are indicated.

1. Standard-Pattern, Push-on-Joint Fittings: AWWA C110, ductile or gray iron.

a. Gaskets: AWWA C111, rubber.

2. Compact-Pattern, Push-on-Joint Fittings: AWWA C153, ductile iron.

a. Gaskets: AWWA C111, rubber.

C. Plain-End, Ductile-Iron Pipe: AWWA C151.

1. Grooved-Joint, Ductile-Iron-Pipe Appurtenances:

a. Manufacturers: Subject to compliance with requirements, provide products by one of the following:

1) Anvil International.

2) Shurjoint Piping Products.

3) Star Pipe Products.

4) Victaulic Company.

b. Grooved-End, Ductile-Iron Fittings: ASTM A 47/A 47M, malleable-iron castings or ASTM A 536, ductile-iron castings with dimensions matching pipe.

c. Grooved-End, Ductile-Iron-Pipe Couplings: AWWA C606 for ductile-iron-pipe dimensions. Include ferrous housing sections, EPDM-rubber gaskets suitable for hot and cold water, and bolts and nuts.

2.08 PIPING JOINING MATERIALS

A. Pipe-Flange Gasket Materials: AWWA C110, rubber, flat face, 1/8 inch thick or ASME B16.21, nonmetallic and asbestos free, unless otherwise indicated; full-face or ring type unless otherwise indicated.

B. Metal, Pipe-Flange Bolts and Nuts: ASME B18.2.1, carbon steel unless otherwise indicated.

C. Solder Filler Metals: ASTM B 32, lead-free alloys. Include water-flushable flux according to ASTM B 813.

D. Brazing Filler Metals: AWS A5.8/A5.8M, BCuP Series, copper-phosphorus alloys for general-duty brazing unless otherwise indicated.

2.09 SPECIALTY VALVES

A. Comply with requirements in Division 22 Section "General-Duty Valves for Plumbing Piping" for general-duty metal valves.

B. Comply with requirements in Division 22 Section "Domestic Water Piping Specialties" for balancing valves, drain valves, backflow preventers, and vacuum breakers.

2.10 TRANSITION FITTINGS

A. General Requirements:

1. Same size as pipes to be joined.

2. Pressure rating at least equal to pipes to be joined.

3. End connections compatible with pipes to be joined.

B. Fitting-Type Transition Couplings: Manufactured piping coupling or specified piping system fitting.

C. Sleeve-Type Transition Coupling: AWWA C219.

1. Manufacturers: Subject to compliance with requirements, provide products by one of the following:

a. Cascade Waterworks Manufacturing.

b. Dresser, Inc.; Dresser Piping Specialties.

c. Ford Meter Box Company, Inc. (The).

d. JCM Industries.

e. Romac Industries, Inc.

f. Smith-Blair, Inc; a Sensus company.

g. Viking Johnson; c/o Mueller Co.

D. Plastic-to-Metal Transition Fittings:

1. Manufacturers: Subject to compliance with requirements, provide products by one of the following:

a. Charlotte Pipe and Foundry Company.

b. Harvel Plastics, Inc.

c. Spears Manufacturing Company.

2. Description: CPVC or PVC one-piece fitting with manufacturer's Schedule 80 equivalent dimensions; one end with threaded brass insert and one solvent-cement-socket or threaded end.

2.11 DIELECTRIC FITTINGS

A. General Requirements: Assembly of copper alloy and ferrous materials or ferrous material body with separating nonconductive insulating material suitable for system fluid, pressure, and temperature.

B. Dielectric Unions:

1. Manufacturers: Subject to compliance with requirements, provide products by one of the following:

a. Capitol Manufacturing Company.

b. Central Plastics Company.

c. EPCO Sales, Inc.

d. Hart Industries International, Inc.

e. Watts Regulator Co.; a division of Watts Water Technologies, Inc.

f. Zurn Plumbing Products Group; Wilkins Water Control Products.

2. Description:

a. Pressure Rating: 150 psig at 180 deg F.

b. End Connections: Solder-joint copper alloy and threaded ferrous.

C. Dielectric Flanges:

1. Manufacturers: Subject to compliance with requirements, provide products by one of the following:

a. Capitol Manufacturing Company.

b. Central Plastics Company.

c. EPCO Sales, Inc.

d. Watts Regulator Co.; a division of Watts Water Technologies, Inc.

2. Description:

a. Factory-fabricated, bolted, companion-flange assembly.

b. Pressure Rating: 150 psig.

c. End Connections: Solder-joint copper alloy and threaded ferrous; threaded solder-joint copper alloy and threaded ferrous.

D. Dielectric-Flange Kits:

1. Manufacturers: Subject to compliance with requirements, provide products by one of the following:

a. Advance Products & Systems, Inc.

b. Calpico, Inc.

c. Central Plastics Company.

d. Pipeline Seal and Insulator, Inc.

2. Description:

a. Non-conducting materials for field assembly of companion flanges.

b. Pressure Rating: 150 psig.

c. Gasket: Neoprene or phenolic.

d. Bolt Sleeves: Phenolic or polyethylene.

e. Washers: Phenolic with steel backing washers.

E. Dielectric Couplings:

1. Manufacturers: Subject to compliance with requirements, provide products by one of the following:

a. Calpico, Inc.

b. Lochinvar Corporation.

2. Description:

a. Galvanized-steel coupling.

b. Pressure Rating: 300 psig at 225 deg F.

c. End Connections: Female threaded.

d. Lining: Inert and noncorrosive, thermoplastic.

2.12 FLEXIBLE CONNECTORS

A. Manufacturers: Subject to compliance with requirements, provide products by one of the following:

1. Amber-Booth.

2. Triplex.

3. Mercer Rubber Co.

4. Metraflex, Inc.

B. Bronze-Hose Flexible Connectors: Corrugated-bronze tubing with bronze wire-braid covering and ends brazed to inner tubing.

1. Working-Pressure Rating: Minimum 200 psig.

2. End Connections NPS 2 and Smaller: Threaded copper pipe or plain-end copper tube.

3. End Connections NPS 2-1/2 and Larger: Flanged copper alloy.

C. Stainless-Steel-Hose Flexible Connectors: Corrugated-stainless-steel tubing with stainless-steel wire-braid covering and ends welded to inner tubing.

1. Working-Pressure Rating: Minimum 200 psig.

2. End Connections NPS 2 and Smaller: Threaded steel-pipe nipple.

3. End Connections NPS 2-1/2 and Larger: Flanged steel nipple.

2.13 ESCUTCHEONS

A. General: Manufactured ceiling, floor, and wall escutcheons and floor plates.

B. Split Casting, Cast Brass: Polished, chrome-plated or rough-brass finish with concealed hinge and setscrew.

C. Split-Casting Floor Plates: Cast brass with concealed hinge.

2.14 SLEEVES

A. Galvanized-Steel-Pipe Sleeves: ASTM A 53/A 53M, Type E, Grade B, Schedule 40, zinc-coated, with plain ends.

B. Stack Sleeve Fittings: Manufactured, cast-iron sleeve with integral clamping flange. Include clamping ring and bolts and nuts for membrane flashing.

1. Underdeck Clamp: Clamping ring with setscrews.

2.15 SLEEVE SEALS

A. Manufacturers: Subject to compliance with requirements, provide products by one of the following:

1. Advance Products & Systems, Inc.

2. Calpico, Inc.

3. Metraflex, Inc.

4. Pipeline Seal and Insulator, Inc.

B. Description: Modular sealing element unit, designed for field assembly, used to fill annular space between pipe and sleeve.

1. Sealing Elements: EPDM-rubber interlocking links shaped to fit surface of pipe. Include type and number required for pipe material and size of pipe.

2. Pressure Plates: Stainless steel.

3. Connecting Bolts and Nuts: Stainless steel of length required to secure pressure plates to sealing elements.

2.16 WALL PENETRATION SYSTEMS

A. Manufacturers: Subject to compliance with requirements, provide products by one of the following:

1. SIGMA.

B. Description: Wall-sleeve assembly, consisting of housing and gland, gaskets, and pipe sleeve.

1. Carrier-Pipe Deflection: Up to 5 percent without leakage.

2. Housing: Ductile-iron casting with hub, water stop, anchor ring, and locking devices. Include gland, bolts, and nuts.

3. Housing-to-Sleeve Gasket: EPDM rubber.

4. Housing-to-Carrier-Pipe Gasket: AWWA C111, EPDM rubber.

5. Pipe Sleeve: ASTM A 53/A 53M, Schedule 40, zinc-coated steel pipe.

PART 3 - EXECUTION

3.01 PIPING INSTALLATION

A. Drawing plans, schematics, and diagrams indicate general location and arrangement of domestic water piping. Indicated locations and arrangements are used to size pipe and calculate friction loss, expansion, and other design considerations. Install piping as indicated unless deviations to layout are approved on Coordination Drawings.

B. Provide shut-off valve for each battery of fixtures located above ceiling near each bathroom.

C. All buried piping shall be buried a minimum of 30” below finished grade including domestic water.

D. Install underground ductile-iron pipe in PE encasement according to ASTM A 674 or AWWA C105.

E. Install shutoff valve, hose-end drain valve, strainer, pressure gage, and test tee with valve, inside the building at each domestic water service entrance. Comply with requirements in Division 22 Section "Meters and Gages for Plumbing Piping" for pressure gages and Division 22 Section "Domestic Water Piping Specialties" for drain valves and strainers.

F. Install shutoff valve immediately upstream of each dielectric fitting.

G. Valves 2-½” and smaller shall be cast brass with stainless steel ball and stem; 3” and larger shall be gate valves.

H. Butterfly valves are not acceptable for any plumbing applications.

I. Install water-pressure-reducing valves downstream from shutoff valves. Comply with requirements in Division 22 Section "Domestic Water Piping Specialties" for pressure-reducing valves.

J. Install domestic water piping level and plumb.

K. Install piping indicated to be exposed and piping in equipment rooms and service areas at right angles or parallel to building walls. Diagonal runs are prohibited unless specifically indicated otherwise.

L. Install piping above accessible ceilings to allow sufficient space for ceiling panel removal, and coordinate with other services occupying that space.

M. Install piping adjacent to equipment and specialties to allow service and maintenance.

N. Install piping to permit valve servicing.

O. Install nipples, unions, special fittings, and valves with pressure ratings the same as or higher than system pressure rating used in applications below unless otherwise indicated.

P. Install piping free of sags and bends.

Q. Install fittings for changes in direction and branch connections.

R. Install unions in copper tubing at final connection to each piece of equipment, machine, and specialty.

S. Install pressure gages on suction and discharge piping from each plumbing pump and packaged booster pump. Comply with requirements in Division 22 Section "Meters and Gages for Plumbing Piping" for pressure gages.

T. Install thermostats in hot-water circulation piping. Comply with requirements of the latest International Energy Code.

U. Install thermometers on inlet and outlet piping from each water heater. Comply with requirements in Division 22 Section "Meters and Gages for Plumbing Piping" for thermometers.

3.02 TESTING AND STERILIZATION

A. All water piping systems shall be properly tested to assure their being absolutely tight. In the case of pipes which are to be insulated, these tests shall be completed and the piping system proven to be absolutely tight before any insulation is applied. Wherever pipes are placed so that they will ultimately be concealed, these tests shall be conducted and the absolute tightness of each piping system shall be demonstrated before the system is concealed.

B. The procedure of these tests shall consist of subjecting a piping system to a hydrostatic pressure per Section 23 00 00. During the test period, all pipe, fittings and accessories in the particular piping system which is being tested shall be carefully inspected. If leaks are detected, such leaks shall be stopped by means designated by the Owner's duly authorized representative and the hydrostatic test shall again be applied. This procedure shall be repeated until, for an entire twenty-four hour period, no leaks can be found while the system being tested is subjected to the pressure mentioned above.

C. Wherever conditions permit, each piping system shall thereafter be subjected to its normal operating pressure and temperature for a period of no less than five (5) days. During that period, it shall be kept under the most careful observation. The piping systems must demonstrate the propriety of their installation by remaining absolutely tight during this period. Even though the completion of these tests is satisfactory, there is a continuing responsibility for the ultimate, proper, and satisfactory operation of such piping systems and their accessories.

D. After completion of the testing, the entire cold and hot water piping systems, with attached equipment, shall be thoroughly sterilized with a solution containing not less than 50 parts per million of available chlorine. The chlorinating materials shall be either liquid chlorine conforming to U. S. Army Specification No. 4-1 or calcium hypochlorite or chlorinated lime conforming to the requirements of Federal Specification O-C-114. The sterilizing solution shall be allowed to remain in the system for a period of eight (8) hours during which time all valves and faucets shall be opened and closed several times. After sterilization, the solution shall be flushed from the system with clean water until the residual chlorine content is not greater than 0.2 parts per million.

E. The sterilization process shall be conducted as required by the Health Department of the "City of Houston", and the specifications above, and upon completion of the process, the Health Department shall test and certify the cleanliness of the water piping system. The Plumbing Subcontractor shall pay all costs and charges incidental to this test and certification.

3.03 JOINT CONSTRUCTION

A. Ream ends of pipes and tubes and remove burrs. Bevel plain ends of steel pipe.

B. Remove scale, slag, dirt, and debris from inside and outside of pipes, tubes, and fittings before assembly.

C. Threaded Joints: Thread pipe with tapered pipe threads according to ASME B1.20.1. Cut threads full and clean using sharp dies. Ream threaded pipe ends to remove burrs and restore full ID. Join pipe fittings and valves as follows:

1. Apply appropriate tape or thread compound to external pipe threads.

2. Damaged Threads: Do not use pipe or pipe fittings with threads that are corroded or damaged.

D. Brazed Joints: Join copper tube and fittings according to CDA's "Copper Tube Handbook," "Brazed Joints" Chapter.

E. Soldered Joints: Apply ASTM B 813, water-flushable flux to end of tube. Join copper tube and fittings according to ASTM B 828 or CDA's "Copper Tube Handbook."

F. Copper-Tubing, Push-on Joints: Clean end of tube. Measure insertion depth with manufacturer's depth gage. Join copper tube and push-on-joint fittings by inserting tube to measured depth.

G. Copper-Tubing Grooved Joints: Roll groove end of tube. Assemble coupling with housing, gasket, lubricant, and bolts. Join copper tube and grooved-end fittings according to AWWA C606 for roll-grooved joints.

H. Ductile-Iron-Piping Grooved Joints: Cut groove end of pipe. Assemble coupling with housing, gasket, lubricant, and bolts. Join ductile-iron pipe and grooved-end fittings according to AWWA C606 for ductile-iron-pipe, cut-grooved joints.

I. Steel-Piping Grooved Joints: Cut or roll groove end of pipe. Assemble coupling with housing, gasket, lubricant, and bolts. Join steel pipe and grooved-end fittings according to AWWA C606 for steel-pipe grooved joints.

J. Flanged Joints: Select appropriate asbestos-free, nonmetallic gasket material in size, type, and thickness suitable for domestic water service. Join flanges with gasket and bolts according to ASME B31.9.

K. Dissimilar-Material Piping Joints: Make joints using adapters compatible with materials of both piping systems.

3.04 VALVE INSTALLATION

A. Install shutoff valve close to water main on each branch and riser serving plumbing fixtures or equipment, on each water supply to equipment, and on each water supply to plumbing fixtures that do not have supply stops. Use ball valves for piping NPS 2 and smaller. Use butterfly for piping NPS 2-1/2 and larger.

B. Butterfly valves are not acceptable for any plumbing applications.

C. Install drain valves for equipment at base of each water riser, at low points in horizontal piping, and where required to drain water piping. Drain valves are specified in Division 22 Section "Domestic Water Piping Specialties."

1. Hose-End Drain Valves: At low points in water mains, risers, and branches.

2. Stop-and-Waste Drain Valves: Instead of hose-end drain valves where indicated.

D. Install balancing valve in each hot-water circulation return branch and discharge side of each pump and circulator. Set balancing valves partly open to restrict but not stop flow. Use ball valves for piping NPS 2 and smaller and butterfly valves for piping NPS 2-1/2 and larger. Comply with requirements in Division 22 Section "Domestic Water Piping Specialties" for balancing valves.

E. Install calibrated balancing valves in each hot-water circulation return branch and discharge side of each pump and circulator. Set calibrated balancing valves partly open to restrict but not stop flow. Comply with requirements in Division 22 Section "Domestic Water Piping Specialties" for calibrated balancing valves.

3.05 FLEXIBLE CONNECTOR INSTALLATION

A. Install flexible connectors in suction and discharge piping connections to each domestic water pump.

B. Install bronze-hose flexible connectors in copper domestic water tubing.

C. Install stainless-steel-hose flexible connectors in steel domestic water piping.

3.06 HANGER AND SUPPORT INSTALLATION

A. Comply with requirements in Division 22 Section "Vibration Controls for Plumbing Piping and Equipment" for seismic-restraint devices.

B. Comply with requirements in Division 22 Section "Hangers and Supports for Plumbing Piping and Equipment" for pipe hanger and support products and installation.

1. Vertical Piping: MSS Type 8 or 42, clamps.

2. Individual, Straight, Horizontal Piping Runs:

a. 100 Feet and Less: MSS Type 1, adjustable, steel clevis hangers.

b. Longer than 100 Feet: MSS Type 43, adjustable roller hangers.

c. Longer than 100 Feet If Indicated: MSS Type 49, spring cushion rolls.

3. Multiple, Straight, Horizontal Piping Runs 100 Feet or Longer: MSS Type 44, pipe rolls. Support pipe rolls on trapeze.

4. Base of Vertical Piping: MSS Type 52, spring hangers.

C. Support vertical piping and tubing at base and at each floor.

D. Rod diameter may be reduced one size for double-rod hangers, to a minimum of 3/8 inch.

E. Install hangers for copper tubing with the following maximum horizontal spacing and minimum rod diameters:

1. NPS 3/4 and Smaller: 60 inches with 3/8-inch rod.

2. NPS 1 and NPS 1-1/4: 72 inches with 3/8-inch rod.

3. NPS 1-1/2 and NPS 2: 96 inches with 3/8-inch rod.

4. NPS 2-1/2: 108 inches with 1/2-inch rod.

5. NPS 3 to NPS 5: 10 feet with 1/2-inch rod.

6. NPS 6: 10 feet with 5/8-inch rod.

F. Install supports for vertical copper tubing every 10 feet.

3.07 CONNECTIONS

A. Drawings indicate general arrangement of piping, fittings, and specialties.

B. Install piping adjacent to equipment and machines to allow service and maintenance.

C. Connect domestic water piping to exterior water-service piping. Use transition fitting to join dissimilar piping materials.

D. Connect domestic water piping to water-service piping with shutoff valve; extend and connect to the following:

1. Water Heaters: Cold-water inlet and hot-water outlet piping in sizes indicated, but not smaller than sizes of water heater connections.

2. Plumbing Fixtures: Cold- and hot-water supply piping in sizes indicated, but not smaller than required by plumbing code. Comply with requirements for plumbing fixture for connection sizes.

3. Equipment: Cold- and hot-water supply piping as indicated, but not smaller than equipment connections. Provide shutoff valve and union for each connection. Use flanges instead of unions for NPS 2-1/2 and larger.

3.08 IDENTIFICATION

A. Identify system components. Comply with requirements in Division 22 Section "Identification for Plumbing Piping and Equipment" for identification materials and installation.

B. Label pressure piping with system operating pressure.

3.09 FIELD QUALITY CONTROL

A. Perform tests and inspections.

B. Piping Inspections:

1. Do not enclose, cover, or put piping into operation until it has been inspected and approved by authorities having jurisdiction.

2. During installation, notify authorities having jurisdiction at least one day before inspection must be made. Perform tests specified below in presence of authorities having jurisdiction:

   a. Roughing-in Inspection: Arrange for inspection of piping before concealing or closing-in after roughing-in and before setting fixtures.

   b. Final Inspection: Arrange final inspection for authorities having jurisdiction to observe tests specified below and to ensure compliance with requirements.

3. Re-inspection: If authorities having jurisdiction find that piping will not pass tests or inspections, make required corrections and arrange for re-inspection.

4. Reports: Prepare inspection reports and have them signed by authorities having jurisdiction.

C. Piping Tests:

1. Fill domestic water piping. Check components to determine that they are not air bound and that piping is full of water.

2. Test for leaks and defects in new piping and parts of existing piping that have been altered, extended, or repaired. If testing is performed in segments, submit a separate report for each test, complete with diagram of portion of piping tested.

3. Leave new, altered, extended, or replaced domestic water piping uncovered and unconcealed until it has been tested and approved. Expose work that was covered or concealed before it was tested.

4. Cap and subject piping to static water pressure of 50 psig above operating pressure, without exceeding pressure rating of piping system materials. Isolate test source and

allow it to stand for four hours. Leaks and loss in test pressure constitute defects that must be repaired.

5. Repair leaks and defects with new materials and retest piping or portion thereof until satisfactory results are obtained.

6. Prepare reports for tests and for corrective action required.

D. Domestic water piping will be considered defective if it does not pass tests and inspections.

E. Prepare test and inspection reports.

3.10 ADJUSTING

A. Perform the following adjustments before operation:

1. Close drain valves, hydrants, and hose bibbs.

2. Open shutoff valves to fully open position.

3. Open throttling valves to proper setting.

4. Adjust balancing valves in hot-water-circulation return piping to provide adequate flow.

a. Manually adjust ball-type balancing valves in hot-water-circulation return piping to provide flow of hot water in each branch.

b. Adjust calibrated balancing valves to flows indicated.

5. Remove plugs used during testing of piping and for temporary sealing of piping during installation.

6. Remove and clean strainer screens. Close drain valves and replace drain plugs.

7. Remove filter cartridges from housings and verify that cartridges are as specified for application where used and are clean and ready for use.

8. Check plumbing specialties and verify proper settings, adjustments, and operation.

3.11 CLEANING

A. Clean and disinfect potable domestic water piping as follows:

1. Purge new piping and parts of existing piping that have been altered, extended, or repaired before using.

2. Use purging and disinfecting procedures prescribed by authorities having jurisdiction; if methods are not prescribed, use procedures described in either AWWA C651 or AWWA C652 or follow procedures described below:

a. Flush piping system with clean, potable water until dirty water does not appear at outlets.

b. Fill and isolate system according to either of the following:

1) Fill system or part thereof with water/chlorine solution with at least 50 ppm of chlorine. Isolate with valves and allow it to stand for 24 hours.

2) Fill system or part thereof with water/chlorine solution with at least 200 ppm of chlorine. Isolate and allow it to stand for three hours.

c. Flush system with clean, potable water until no chlorine is in water coming from system after the standing time.

d. Submit water samples in sterile bottles to authorities having jurisdiction. Repeat procedures if biological examination shows contamination.

B. Clean non-potable domestic water piping as follows:

1. Purge new piping and parts of existing piping that have been altered, extended, or repaired before using.

2. Use purging procedures prescribed by authorities having jurisdiction or; if methods are not prescribed, follow procedures described below:

a. Flush piping system with clean, potable water until dirty water does not appear at outlets.

b. Submit water samples in sterile bottles to authorities having jurisdiction. Repeat procedures if biological examination shows contamination.

C. Prepare and submit reports of purging and disinfecting activities.

D. Clean interior of domestic water piping system. Remove dirt and debris as work progresses.

3.12 VALVE SCHEDULE

A. Drawings indicate valve types to be used. Where specific valve types are not indicated, the following requirements apply:

1. Shutoff Duty: Use ball valves for piping NPS 2 and smaller. Use gate, ball valves with flanged ends for piping NPS 2-1/2 and larger.

2. Throttling Duty: Use ball or globe valves for piping NPS 2 and smaller. Use globe or ball valves with flanged ends for piping NPS 2-1/2 and larger.

3. Hot-Water Circulation Piping, Balancing Duty: Memory-stop balancing valves.

4. Drain Duty: Hose-end drain valves.

B. Use check valves to maintain correct direction of domestic water flow to and from equipment.

C. Iron grooved-end valves may be used with grooved-end piping.

END OF SECTION 221116

22 11 19

DOMESTIC WATER PIPING SPECIALTIES

PART 1 - GENERAL

1.01 RELATED DOCUMENTS

A. Drawings and general provisions of the Contract, including General and Supplementary Conditions and Division 01 Specification Sections, apply to this Section.

B. Coordinate with Commissioning Requirements indicated in Section 019100. This contractor is responsible to comply with all requirements for the above section.

1.02 SUMMARY

A. This Section includes the following domestic water piping specialties:

1. Vacuum breakers.
2. Backflow preventers.
3. Water pressure-reducing valves.
4. Balancing valves.
5. Temperature-actuated water mixing valves.
6. Strainers.
7. Hose bibbs.
8. Wall hydrants.
9. Drain valves.
10. Water hammer arresters.
11. Air vents.
12. Trap-seal primer valves.
13. Trap-seal primer systems.

B. Related Sections:

1. Section 013300 Submittals.
2. Section 01524 Construction Waste Management
3. Section 01352 LEED Requirements

4. Section 01611 Environmental Management

5. Section 01570 Pollution Prevention and Control

1.03 PERFORMANCE REQUIREMENTS

A. Minimum Working Pressure for Domestic Water Piping Specialties: 125 psig, unless otherwise indicated.

1.04 SUBMITTALS

A. Product Data: For each type of product indicated.

B. Shop Drawings: Diagram power, signal, and control wiring.

C. Field quality-control test reports.

D. Operation and Maintenance Data: For domestic water piping specialties to include in emergency, operation, and maintenance manuals.

E. Product data. Unless otherwise indicated, submit the following for each type of product provided under work of this Section:

1. Recycled Content:

a. Indicate recycled content; indicate percentage of pre-consumer and post-consumer recycled content per unit of product.

2. Local/Regional Materials:

a. Indicate location of manufacturing facility; indicate distance between manufacturing facility and the project site.

b. Indicate location of extraction, harvesting, and recovery; indicate distance between extraction, harvesting, and recovery and the project site.

3. VOC data:

a. Submit manufacturer's product data for joint compounds. Indicate VOC and chemical component limits of the product. Submit MSDS highlighting VOC and chemical component limits. VOC contents and chemical component limits must be less than the limits of Green Seal's Standard GS-11.

b. Submit manufacturer's certification that products comply with Green Seal's Standard GS-11

c. Submit environmental data in accordance with Table 1 of ASTM E2129 for products provided under work of this Section.

4. Submit the following according to Conditions of the Construction Contract.

a. Product data. Unless otherwise indicated, submit the following for each type of product provided under work of this Section:

5. General: Submit additional LEED submittal requirements included in other sections of the Specifications.

6. LEED submittals are in addition to other submittals. If submitted item is identical to that submitted to comply with other requirements, submit duplicate copies as a separate submittal to verify compliance with indicated LEED requirements.

1.05 QUALITY ASSURANCE

A. Electrical Components, Devices, and Accessories: Listed and labeled as defined in NFPA 70, Article 100, by a testing agency acceptable to authorities having jurisdiction, and marked for intended use.

1.06 MAINTENANCE

A. Provide twelve (12) months maintenance of all materials and equipment under this section. Cost of the twelve (12) month normal and preventive maintenance shall be included within this scope of work.

PART 2 - PRODUCTS

2.01 ENVIRONMENTALLY PREFERABLE PRODUCTS

A. Provide environmentally preferable products to the greatest extent possible.

1. To the greatest extent possible, provide products and materials that promote stewardship of the earth's resources, promote good indoor environmental quality (IEQ), and promote efficiencies in operational performance.

B. Provide products listed on the EPA Comprehensive Procurement Guidelines to the greatest extent practicable.

C. Provide products listed on the USGBC Directory of Products and Services to the greatest extent possible.

2.02 RECYCLED CONTENT

A. Provide recycled content products to the greatest extent possible.

1. To the greatest extent possible, provide materials with recycled content such that the sum of post-consumer recycled content plus one-half of the post-industrial content constitutes at least 10% of the total value of the materials in the project.

2.03 REGIONAL MATERIALS

A. Provide Regional materials and products to the greatest extent possible that are extracted and manufactured within the region.

1. Provide materials and products that use a minimum of 20 % of building products that are manufactured regionally within a radius of 500 miles from the project site.

   a. Manufacturing refers to the final assembly of components into the building product that is furnished and installed by the tradesman.

2. Of the regionally manufactured materials used and documented, use a minimum of 50% of building materials and products that are extracted, harvested or recovered (as well as manufactured) within 500 miles of the project site.

2.04 VACUUM BREAKERS

A. Pipe-Applied, Atmospheric-Type Vacuum Breakers:

1. Manufacturers: Subject to compliance with requirements, provide products by one of the following:

   a. Ames Co.

   b. FEBCO; SPX Valves & Controls.

   c. J. R. Smith Corporation.

   d. Watts Industries, Inc.; Water Products Div.

   e. Zurn Plumbing Products Group; Wilkins Div.

2. Standard: ASSE 1001.

3. Size: NPS 1/4 to NPS 3, as required to match connected piping.

4. Body: Bronze.

5. Inlet and Outlet Connections: Threaded.

6. Finish: Rough bronze.

B. Hose-Connection Vacuum Breakers:

1. Manufacturers: Subject to compliance with requirements, provide products by one of the following:

   a. Legend Valve.

   b. MIFAB, Inc.

   c. Prier Products, Inc.

   d. Watts Industries, Inc.; Water Products Div.

   e. Woodford Manufacturing Company.

f. Zurn Plumbing Products Group; Light Commercial Operation.

2. Standard: ASSE 1011.

3. Body: Bronze, non-removable, with manual drain.

4. Outlet Connection: Garden-hose threaded complying with ASME B1.20.7.

5. Finish: Chrome or nickel plated.

2.05 BACKFLOW PREVENTERS

A. Reduced-Pressure-Principle Backflow Preventers:

1. Manufacturers: Subject to compliance with requirements, provide products by one of the following:

a. FEBCO; SPX Valves & Controls.

b. Watts Industries, Inc.; Water Products Div.

c. Zurn Plumbing Products Group; Wilkins Div.

2. Standard: ASSE 1013.

3. Operation: Continuous-pressure applications.

4. Pressure Loss: 5 psi maximum, through middle 1/3 of flow range.

5. Size: As indicated on drawings.

6. Body: Bronze for NPS 2 and smaller; cast iron with interior lining complying with AWWA C550 or that is FDA approved for NPS 2-1/2 and larger.

7. End Connections: Threaded for NPS 2 and smaller; flanged for NPS 2-1/2 and larger.

8. Configuration: Designed for horizontal, straight through flow.

9. Accessories:

a. Valves: Ball type with threaded ends on inlet and outlet of NPS 2 and smaller; outside screw and yoke gate-type with flanged ends on inlet and outlet of NPS 2-1/2 and larger.

b. Air-Gap Fitting: ASME A112.1.2, matching backflow-preventer connection.

B. Reduced-Pressure-Detector, Fire-Protection Backflow-Preventer Assemblies:

1. Manufacturers: Subject to compliance with requirements, provide products by one of the following:

a. Ames Co.

b. FEBCO; SPX Valves & Controls.

c. Watts Industries, Inc.; Water Products Div.

d. Zurn Plumbing Products Group; Wilkins Div.

2. Standard: ASSE 1047 and FMG approved or UL listed.

3. Operation: Continuous-pressure applications.

4. Pressure Loss: 7 psig maximum, through middle 1/3 of flow range.

5. Size: As indicated on plans.

6. Body: Cast iron with interior lining complying with AWWA C550 or that is FDA approved.

7. End Connections: Flanged.

8. Configuration: Designed for horizontal, straight through flow.

9. Accessories:

a. Valves: Outside screw and yoke gate-type with flanged ends on inlet and outlet.

b. Air-Gap Fitting: ASME A112.1.2, matching backflow-preventer connection.

c. Bypass: With displacement-type water meter, shutoff valves, and reduced-pressure backflow preventer.

2.06 BALANCING VALVES

A. Copper-Alloy Calibrated Balancing Valves:

1. Manufacturers: Subject to compliance with requirements, provide products by one of the following:

a. Armstrong International, Inc.

b. Flo Fab Inc.

c. ITT Industries; Bell & Gossett Div.

d. NIBCO INC.

e. Taco, Inc.

f. Watts Industries, Inc.; Water Products Div.

2. Type: Ball or Y-pattern globe valve with two readout ports and memory setting indicator.

3. Body: bronze,

4. Size: Same as connected piping, but not larger than NPS 2.

5. Accessories: Meter hoses, fittings, valves, differential pressure meter, and carrying case.

2.07 TEMPERATURE-ACTUATED WATER MIXING VALVES

A. Water-Temperature Limiting Devices:

1. Manufacturers: Subject to compliance with requirements, provide products by one of the following:

a. Armstrong International, Inc.

b. Honeywell Water Controls.

c. Powers; a Watts Industries Co.

d. Symmons Industries, Inc.

e. Watts Industries, Inc.; Water Products Div.

f. Zurn Plumbing Products Group; Wilkins Div.

2. Standard: ASSE 1017.

3. Pressure Rating: 125 psig.

4. Type: Thermostatically controlled water mixing valve.

5. Material: Bronze body with corrosion-resistant interior components.

6. Connections: Threaded inlets and outlet.

7. Accessories: Check stops on hot- and cold-water supplies, and adjustable, temperature-control handle.

2.08 STRAINERS FOR DOMESTIC WATER PIPING

A. Y-Pattern Strainers:

1. Pressure Rating: 125 psig minimum, unless otherwise indicated.

2. Body: Bronze for NPS 2 and smaller; cast iron with interior lining complying with AWWA C550 or FDA-approved, epoxy coating and for NPS 2-1/2 and larger.

3. End Connections: Threaded for NPS 2 and smaller; flanged for NPS 2-1/2 and larger.

4. Screen: Stainless steel with round perforations, unless otherwise indicated.

5. Perforation Size:

   a. Strainers NPS 2 and Smaller: 0.020 inch.

   b. Strainers NPS 2-1/2 to NPS 4: 0.045 inch.

   c. Strainers NPS 5 and Larger: 0.10 inch.

6. Drain: Factory-installed, hose-end drain valve.

B. Icemaker Outlet Boxes:

1. Manufacturers: Subject to compliance with requirements, provide products by one of the following:

   a. Acorn Engineering Company.

   b. IPS Corporation.

   c. LSP Products Group, Inc.

   d. Plastic Oddities; a division of Diverse Corporate Technologies.

2. Mounting: Recessed.

3. Material and Finish: Enameled-steel or epoxy-painted-steel box and faceplate.

   4. Faucet: Valved fitting complying with ASME A112.18.1. Include NPS 1/2 or smaller copper tube outlet.

   5. Supply Shutoff Fitting: NPS 1/2 gate, globe, or ball valve and NPS 1/2 copper, water tubing.

2.09 HOSE BIBBS

A. Hose Bibbs:

1. Standard: ASME A112.18.1 for sediment faucets.

2. Body Material: Bronze.

3. Seat: Bronze, replaceable.

4. Supply Connections: NPS 1/2 or NPS 3/4 threaded or solder-joint inlet.

5. Outlet Connection: Garden-hose thread complying with ASME B1.20.7.

6. Pressure Rating: 125 psig.

7. Vacuum Breaker: Integral non-removable, drainable, hose-connection vacuum breaker complying with ASSE 1011.

8. Finish for Equipment Rooms: Rough bronze, or chrome or nickel plated.

9. Finish for Service Areas: Chrome or nickel plated.

10. Finish for Finished Rooms: Chrome or nickel plated.

11. Operation for Equipment Rooms: Wheel handle or operating key.

12. Operation for Service Areas: Operating key.

13. Include operating key with each operating-key hose bibb.

14. Include wall flange with each chrome- or nickel-plated hose bibb.

2.10 WALL HYDRANTS

A. Non-freeze Wall Hydrants:

1. Manufacturers: Subject to compliance with requirements, provide products by one of the following:

    a. Josam Company.

    b. MIFAB, Inc.

    c. Smith, Jay R. Mfg. Co.; Division of Smith Industries, Inc.

    d. Tyler Pipe; Wade Div.

    e. Watts Drainage Products Inc.

    f. Zurn Plumbing Products Group; Light Commercial Operation.

2. Standard: ASME A112.21.3M for concealed outlet, self-draining wall hydrants.

3. Pressure Rating: 125 psig.

4. Operation: Loose key.

5. Casing and Operating Rod: Of length required to match wall thickness. Include wall clamp.

6. Inlet: NPS 3/4 or NPS 1.

7. Outlet: Concealed, with integral vacuum breaker and garden-hose thread complying with ASME B1.20.7.

8. Box: Deep, flush mounting with cover.

9. Box and Cover Finish: Polished nickel bronze.

10. Outlet: Exposed, with integral vacuum breaker and garden-hose thread complying with ASME B1.20.7.

11. Nozzle and Wall-Plate Finish: Polished nickel bronze.

12. Operating Keys(s): One with each wall hydrant.

2.11 DRAIN VALVES

A. Ball-Valve-Type, Hose-End Drain Valves:

1. Standard: MSS SP-110 for standard-port, two-piece ball valves.

2. Pressure Rating: 400-psig minimum CWP.

3. Size: NPS 3/4.

4. Body: Copper alloy.

5. Ball: Chrome-plated brass.

6. Seats and Seals: Replaceable.

7. Handle: Vinyl-covered steel.

8. Inlet: Threaded or solder joint.

9. Outlet: Threaded, short nipple with garden-hose thread complying with ASME B1.20.7 and cap with brass chain.

B. Gate-Valve-Type, Hose-End Drain Valves:

1. Standard: MSS SP-80 for gate valves.

2. Pressure Rating: Class 125.

3. Size: NPS 3/4.

4. Body: ASTM B 62 bronze.

5. Inlet: NPS 3/4 threaded or solder joint.

6. Outlet: Garden-hose thread complying with ASME B1.20.7 and cap with brass chain.

2.12 WATER HAMMER ARRESTERS

A. Water Hammer Arresters:

1. Manufacturers: Subject to compliance with requirements, provide products by one of the following:

a. AMTROL, Inc.

b. Josam Company.

c. MIFAB, Inc.

d. Tyler Pipe; Wade Div.

e. Watts Drainage Products Inc.

f. Zurn Plumbing Products Group; Specification Drainage Operation.

2. Standard: ASSE 1010 or PDI-WH 201.

3. Type: Metal bellows.

4. Size: ASSE 1010, Sizes AA and A through F or PDI-WH 201, Sizes A through F.

2.13 AIR VENTS

A. Bolted-Construction Automatic Air Vents:

1. Body: Bronze.

2. Pressure Rating: 125-psig minimum pressure rating at 140 deg F.

3. Float: Replaceable, corrosion-resistant metal.

4. Mechanism and Seat: Stainless steel.

5. Size: NPS 3/8 minimum inlet.

6. Inlet and Vent Outlet End Connections: Threaded.

2.14 TRAP-SEAL PRIMER VALVES

A. Supply-Type, Trap-Seal Primer Valves:

1. Manufacturers: Subject to compliance with requirements, provide products by one of the following:

a. MIFAB, Inc.

b. PPP Inc.

c. Sioux Chief Manufacturing Company, Inc.

d. Smith, Jay R. Mfg. Co.; Division of Smith Industries, Inc.

e. Watts Industries, Inc.; Water Products Div.

2. Standard: ASSE 1018.

3. Pressure Rating: 125 psig minimum.

4. Body: Bronze.

5. Inlet and Outlet Connections: NPS 1/2 threaded, union, or solder joint.

6. Gravity Drain Outlet Connection: NPS 1/2 threaded or solder joint.

7. Finish: Chrome plated, or rough bronze for units used with pipe or tube that is not chrome finished.

PART 3 - EXECUTION

3.01 INSTALLATION

A. Install backflow preventers in each water supply to mechanical equipment and systems and to other equipment and water systems that may be sources of contamination. Comply with authorities having jurisdiction.

1. Locate backflow preventers in same room as connected equipment or system.

2. Install drain for backflow preventers with atmospheric-vent drain connection with air-gap fitting, fixed air-gap fitting, or equivalent positive pipe separation of at least two pipe diameters in drain piping and pipe to floor drain. Locate air-gap device attached to or under backflow preventer. Simple air breaks are not acceptable for this application.

3. Do not install bypass piping around backflow preventers.

4. Backflow preventer shall be certified by Contractor.

5. Provide a floor drain within six (6) feet of each backflow preventer.

B. Install water regulators with inlet and outlet shutoff valves. Install pressure gages on inlet and outlet.

C. Install water control valves with inlet and outlet shutoff valves. Install pressure gages on inlet and outlet.

D. Install balancing valves in locations where they can easily be adjusted.

E. Install temperature-actuated water mixing valves with check stops or shutoff valves on inlets and with shutoff valve on outlet.

1. Install thermometers and water regulators if specified.

2. Install cabinet-type units recessed in or surface mounted on wall as specified.

F. Install Y-pattern strainers for water on supply side of each control valve, solenoid valve, and pump.

G. Install hose stations with check stops or shutoff valves on inlets and with thermometer on outlet.

1. Install shutoff valve on outlet if specified.

2. Install cabinet-type units recessed in or surface mounted on wall as specified. Install 2-by-4-inch fire-retardant-treated-wood blocking wall reinforcement between studs. Fire-retardant-treated-wood blocking is specified in Division 06 Section "Rough Carpentry."

H. Install freeze-resistant yard hydrants with riser pipe set in concrete or pavement. Do not encase canister in concrete.

I. Install water hammer arresters in water piping according to PDI-WH 201.

J. Install air vents at high points of water piping. Install drain piping and discharge onto floor drain.

K. Install supply-type, trap-seal primer valves with outlet piping pitched down toward drain trap a minimum of 1 percent, and connect to floor-drain body, trap, or inlet fitting. Adjust valve for proper flow.

L. Install drainage-type, trap-seal primer valves as lavatory trap with outlet piping pitched down toward drain trap a minimum of 1 percent, and connect to floor-drain body, trap, or inlet fitting.

M. Install trap-seal primer systems with outlet piping pitched down toward drain trap a minimum of 1 percent, and connect to floor-drain body, trap, or inlet fitting. Adjust system for proper flow.

3.02 CONNECTIONS

A. Piping installation requirements are specified in other Division 22 Sections. Drawings indicate general arrangement of piping and specialties.

B. Ground equipment according to Division 26 Section "Grounding and Bonding for Electrical Systems."

C. Connect wiring according to Division 26 Section "Low-Voltage Electrical Power Conductors and Cables."

3.03 LABELING AND IDENTIFYING

A. Equipment Nameplates and Signs: Install engraved plastic-laminate equipment nameplate or sign on or near each of the following:

1. Pressure vacuum breakers.

2. Reduced-pressure-principle backflow preventers.

3. Reduced-pressure-detector, fire-protection backflow-preventer assemblies.

4. Primary, thermostatic, water mixing valves.

5. Primary water tempering valves.

6. Hose stations.

7. Supply-type, trap-seal primer valves.

B. Distinguish among multiple units, inform operator of operational requirements, indicate safety and emergency precautions, and warn of hazards and improper operations, in addition to identifying unit. Nameplates and signs are specified in Division 22 Section "Identification for Plumbing Piping and Equipment."

3.04 FIELD QUALITY CONTROL

A. Perform the following tests and prepare test reports:

1. Test each pressure vacuum breaker reduced-pressure-principle backflow preventer double-check, detector-assembly backflow preventer according to authorities having jurisdiction and the device's reference standard.

B. Remove and replace malfunctioning domestic water piping specialties and retest as specified above.

3.05 ADJUSTING

A. Set field-adjustable pressure set points of water pressure-reducing valves.

B. Set field-adjustable flow set points of balancing valves.

C. Set field-adjustable temperature set points of temperature-actuated water mixing valves.

END OF SECTION 221119

22 13 16

SANITARY WASTE PIPING

PART 1 - GENERAL

1.01 RELATED DOCUMENTS

A. Drawings and general provisions of the Contract, including General and Supplementary Conditions and Division 01 Specification Sections, apply to this Section.

1.02 SUMMARY

A. This Section includes the following for soil, waste, and vent piping inside the building:

1. Pipe, tube, and fittings.
2. Special pipe fittings.
3. Encasement for underground metal piping.

B. Related Sections:

1. Section 013300 Submittals.
2. Section 01524 Construction Waste Management
3. Section 01352 LEED Requirements
4. Section 01611 Environmental Management
5. Section 01570 Pollution Prevention and Control

1.03 DEFINITIONS

A. ABS: Acrylonitrile-butadiene-styrene plastic.

B. EPDM: Ethylene-propylene-diene terpolymer rubber.

C. LLDPE: Linear, low-density polyethylene plastic.

D. NBR: Acrylonitrile-butadiene rubber.

E. PE: Polyethylene plastic.

F. PVC: Polyvinyl chloride plastic.

G. TPE: Thermoplastic elastomer.

1.04 PERFORMANCE REQUIREMENTS

A. Components and installation shall be capable of withstanding the following minimum working pressure, unless otherwise indicated:

1. Soil, Waste, and Vent Piping: 10-foot head of water.

2. Sanitary Sewer, Force-Main Piping: 100 psig.

1.05 SUBMITTALS

A. Product Data: For pipe, tube, fittings, and couplings.

B. Field quality-control inspection and test reports.

C. Product data. Unless otherwise indicated, submit the following for each type of product provided under work of this Section:

1. Recycled Content:

a. Indicate recycled content; indicate percentage of pre-consumer and post-consumer recycled content per unit of product.

2. Local/Regional Materials:

a. Indicate location of manufacturing facility; indicate distance between manufacturing facility and the project site.

b. Indicate location of extraction, harvesting, and recovery; indicate distance between extraction, harvesting, and recovery and the project site.

3. VOC data:

a. Submit manufacturer's product data for joint compounds. Indicate VOC and chemical component limits of the product. Submit MSDS highlighting VOC and chemical component limits. VOC contents and chemical component limits must be less than the limits of Green Seal’s Standard GS-11.

b. Submit manufacturer’s certification that products comply with Green Seal’s Standard GS-11

c. Submit environmental data in accordance with Table 1 of ASTM E2129 for products provided under work of this Section.

4. Submit the following according to Conditions of the Construction Contract.

a. Product data. Unless otherwise indicated, submit the following for each type of product provided under work of this Section:

5. General: Submit additional LEED submittal requirements included in other sections of the Specifications.

6. LEED submittals are in addition to other submittals. If submitted item is identical to that submitted to comply with other requirements, submit duplicate copies as a separate submittal to verify compliance with indicated LEED requirements.

1.06 QUALITY ASSURANCE

A. Piping materials shall bear label, stamp, or other markings of specified testing agency.

B. Comply with NSF 14, "Plastics Piping Systems Components and Related Materials," for plastic piping components. Include marking with "NSF-DWV" for plastic drain, waste, and vent piping; "NSF-drain" for plastic drain piping; "NSF-tubular" for plastic continuous waste piping; and "NSF-sewer" for plastic sewer piping.

PART 2 - PRODUCTS

2.01 ENVIRONMENTALLY PREFERABLE PRODUCTS

A. Provide environmentally preferable products to the greatest extent possible.

1. To the greatest extent possible, provide products and materials that promote stewardship of the earth's resources, promote good indoor environmental quality (IEQ), and promote efficiencies in operational performance.

B. Provide products listed on the EPA Comprehensive Procurement Guidelines to the greatest extent practicable.

C. Provide products listed on the USGBC Directory of Products and Services to the greatest extent possible.

2.02 RECYCLED CONTENT

A. Provide recycled content products to the greatest extent possible.

1. To the greatest extent possible, provide materials with recycled content such that the sum of post-consumer recycled content plus one-half of the post-industrial content constitutes at least 10% of the total value of the materials in the project.

2.03 REGIONAL MATERIALS

A. Provide Regional materials and products to the greatest extent possible that are extracted and manufactured within the region.

1. Provide materials and products that use a minimum of 20 % of building products that are manufactured regionally within a radius of 500 miles from the project site.

a. Manufacturing refers to the final assembly of components into the building product that is furnished and installed by the tradesman.

2. Of the regionally manufactured materials used and documented, use a minimum of 50% of building materials and products that are extracted, harvested or recovered (as well as manufactured) within 500 miles of the project site.

2.04 MANUFACTURERS

A. In other Part 2 articles where titles below introduce lists, the following requirements apply to product selection:

1. Manufacturers: Subject to compliance with requirements, provide products by one of the manufacturers specified.

2.05 SANITARY SOIL, WASTE AND VENT PIPING, WITHIN BUILDING (UNDERGROUND APPLICATION)

A. PVC Pipe (Below Grade): Schedule 40 PVC, conform to ASTM D-1785 Soil and Waste Vent piping. Fittings shall be compatible material with solvent cement type joints.

B. PVC Socket Fittings: ASTM D 2665, made to ASTM D 3311 drain, waste, and vent pipe patterns with solvent-cemented joints.

2.06 HUBLESS CAST-IRON SOIL PIPE AND FITTINGS (ABOVE GROUND APPLICATION)

A. Pipe and Fittings: ASTM A 888 or CISPI 301.

B. Sovent Stack Fittings: ASME B16.45 or ASSE 1043, hubless, cast-iron aerator and deaerator drainage fittings.

C. Shielded Couplings: ASTM C 1277 assembly of metal shield or housing, corrosion-resistant fasteners, and rubber sleeve with integral, center pipe stop.

1. Standard, Shielded, Stainless-Steel Couplings: CISPI 310, with stainless-steel corrugated shield; stainless-steel bands and tightening devices; and ASTM C 564, rubber sleeve.

a. Manufacturers:

1) ANACO.

2) Fernco, Inc.

3) Ideal Div.; Stant Corp.

4) Mission Rubber Co.

5) Tyler Pipe; Soil Pipe Div.

2.07 SPECIAL PIPE FITTINGS

A. Flexible, Non-pressure Pipe Couplings: Comply with ASTM C 1173, elastomeric, sleeve-type, reducing or transition pattern. Include shear ring, ends of same sizes as piping to be joined, and corrosion-resistant-metal tension band and tightening mechanism on each end.

1. Manufacturers:

a. Dallas Specialty & Mfg. Co.

b. Fernco, Inc.

c. Mission Rubber Co.

2. Sleeve Materials:

a. For Cast-Iron Soil Pipes: ASTM C 564, rubber.

b. For Plastic Pipes: ASTM F 477, elastomeric seal or ASTM D 5926, PVC.

c. For Dissimilar Pipes: ASTM D 5926, PVC or other material compatible with pipe materials being joined.

B. Shielded Non-pressure Pipe Couplings: ASTM C 1460, elastomeric or rubber sleeve with full-length, corrosion-resistant outer shield and corrosion-resistant-metal tension band and tightening mechanism on each end.

1. Manufacturers:

a. Cascade Waterworks Mfg. Co.

b. Mission Rubber Co.

C. Rigid, Unshielded, Non-pressure Pipe Couplings: ASTM C 1461, sleeve-type reducing- or transition-type mechanical coupling molded from ASTM C 1440, TPE material with corrosion-resistant-metal tension band and tightening mechanism on each end.

1. Manufacturers:

a. ANACO.

PART 3 - EXECUTION

3.01 PIPING APPLICATIONS

A. Flanges and unions may be used on aboveground pressure piping, unless otherwise indicated.

B. Aboveground, soil and waste piping NPS 4 and smaller shall be the following:

1. Service class, cast-iron soil pipe and fittings; gaskets; and gasketed joints.

2. Hubless cast-iron soil pipe and fittings and sovent stack fittings; standard, shielded, stainless-steel couplings; and hubless-coupling joints.

C. Aboveground soil and waste piping NPS 6 and larger shall be the following:

1. Service class, cast-iron soil pipe and fittings; gaskets; and gasketed joints.

2. Hub less cast-iron soil pipe and fittings; standard, shielded, stainless-steel couplings; and hub less-coupling joints.

D. Aboveground, vent piping NPS 4 and smaller shall be the following:

1. Service class, cast-iron soil pipe and fittings; gaskets; and gasketed joints.

2. Hubless cast-iron soil pipe and fittings; standard, shielded, stainless-steel couplings; and hubless-coupling joints.

3. Copper DWV tube, copper drainage fittings, and soldered joints.

a. Option for Vent Piping, NPS 2-1/2 and NPS 3-1/2: Hard copper tube, Type M; copper pressure fittings; and soldered joints.

E. Underground, soil, waste, and vent piping NPS 6 and smaller shall be the following:

1. Cellular-core, Sewer and Drain Series, schedule 40 PVC pipe; PVC socket fittings; and solvent-cemented joints.

3.02 PIPING INSTALLATION

A. Sanitary sewer piping outside the building is specified in Division 22.

B. Basic piping installation requirements are specified in Division 22.

C. Install cleanouts at grade and extend to where building sanitary drains connect to building sanitary sewers.

D. Install cleanout fitting with closure plug inside the building in sanitary force-main piping.

E. Install cast-iron sleeve with water stop and mechanical sleeve seal at each service pipe penetration through foundation wall. Select number of interlocking rubber links required to make installation watertight. Sleeves and mechanical sleeve seals are specified in Division 22 Section "Common Work Results for Plumbing."

F. Install wall-penetration fitting at each service pipe penetration through foundation wall. Make installation watertight.

G. Install cast-iron soil piping according to CISPI's "Cast Iron Soil Pipe and Fittings Handbook," Chapter IV, "Installation of Cast Iron Soil Pipe and Fittings."

1. Install encasement on underground piping according to ASTM A 674 or AWWA C105.

H. Make changes in direction for soil and waste drainage and vent piping using appropriate branches, bends, and long-sweep bends. Sanitary tees and short-sweep 1/4 bends may be used on vertical stacks if change in direction of flow is from horizontal to vertical. Use long-turn, double Y-branch and 1/8-bend fittings if 2 fixtures are installed back to back or side by side with common drain pipe. Straight tees, elbows, and crosses may be used on vent lines. Do not change direction of flow more than 90 degrees. Use proper size of standard increasers and reducers if pipes of different sizes are connected. Reducing size of drainage piping in direction of flow is prohibited.

I. Lay buried building drainage piping beginning at low point of each system. Install true to grades and alignment indicated, with unbroken continuity of invert. Place hub ends of piping upstream. Install required gaskets according to manufacturer's written instructions for use of lubricants, cements, and other installation requirements. Maintain swab in piping and pull past each joint as completed.

J. Install soil and waste drainage and vent piping at the following minimum slopes, unless otherwise indicated:

1. Building Sanitary Drain: 2 percent downward in direction of flow for piping NPS 2 and smaller; 1 percent downward in direction of flow for piping NPS 3 and larger.

2. Horizontal Sanitary Drainage Piping: 1 percent downward in direction of flow.

3. Vent Piping: 1 percent down toward vertical fixture vent or toward vent stack.

K. Sleeves are not required for cast-iron soil piping passing through concrete slabs-on-grade if slab is without membrane waterproofing.

L. Install PVC soil and waste drainage and vent piping according to ASTM D 2665.

M. Install underground PVC soil and waste drainage piping according to ASTM D 2321.

N. Do not enclose, cover, or put piping into operation until it is inspected and approved by authorities having jurisdiction.

3.03 JOINT CONSTRUCTION

A. Basic piping joint construction requirements are specified in Division 22 Section "Common Work Results for Plumbing."

B. Join hub less cast-iron soil piping according to CISPI 310 and CISPI's "Cast Iron Soil Pipe and Fittings Handbook" for hub less-coupling joints.

C. PVC Non pressure Piping Joints: Join piping according to ASTM D 2665.

3.04 HANGER AND SUPPORT INSTALLATION

A. Pipe hangers and supports are specified in Division 22 Section "Hangers and Supports for Plumbing Piping and Equipment." Install the following:

1. Vertical Piping: MSS Type 8 or Type 42, clamps.

2. Install individual, straight, horizontal piping runs according to the following:

a. 100 Feet and Less: MSS Type 1, adjustable, steel clevis hangers.

b. Longer than 100 Feet: MSS Type 43, adjustable roller hangers.

c. Longer than 100 Feet, if indicated: MSS Type 49, spring cushion rolls.

3. Multiple, Straight, Horizontal Piping Runs 100 Feet or Longer: MSS Type 44, pipe rolls. Support pipe rolls on trapeze.

4. Base of Vertical Piping: MSS Type 52, spring hangers.

B. Install supports according to Division 22 Section "Hangers and Supports for Plumbing Piping and Equipment."

C. Support vertical piping and tubing at base and at each floor.

D. Rod diameter may be reduced 1 size for double-rod hangers, with 3/8-inch minimum rods.

E. Install hangers for cast-iron soil piping with the following maximum horizontal spacing and minimum rod diameters:

1. NPS 1-1/2 and NPS 2: 60 inches with 3/8-inch rod.

2. NPS 3: 60 inches with 1/2-inch rod.

3. NPS 4 and NPS 5: 60 inches with 5/8-inch rod.

4. NPS 6: 60 inches with 3/4-inch rod.

5. NPS 8 to NPS 12: 60 inches with 7/8-inch rod.

F. Install supports for vertical cast-iron soil piping every 15 feet.

G. Support piping and tubing not listed above according to MSS SP-69 and manufacturer's written instructions.

3.05 CONNECTIONS

A. Drawings indicate general arrangement of piping, fittings, and specialties.

B. Connect soil and waste piping to exterior sanitary sewerage piping. Use transition fitting to join dissimilar piping materials.

C. Connect drainage and vent piping to the following:

1. Plumbing Fixtures: Connect drainage piping in sizes indicated, but not smaller than required by plumbing code.

2. Plumbing Fixtures and Equipment: Connect atmospheric vent piping in sizes indicated, but not smaller than required by authorities having jurisdiction.

3. Plumbing Specialties: Connect drainage and vent piping in sizes indicated, but not smaller than required by plumbing code.

4. Equipment: Connect drainage piping as indicated. Provide shutoff valve, if indicated, and union for each connection. Use flanges instead of unions for connections NPS 2-1/2 and larger.

3.06 FIELD QUALITY CONTROL

A. During installation, notify authorities having jurisdiction at least 24 hours before inspection must be made. Perform tests specified below in presence of authorities having jurisdiction.

1. Roughing-in Inspection: Arrange for inspection of piping before concealing or closing-in after roughing-in and before setting fixtures.

2. Final Inspection: Arrange for final inspection by authorities having jurisdiction to observe tests specified below and to ensure compliance with requirements.

B. Re-inspection: If authorities having jurisdiction find that piping will not pass test or inspection, make required corrections and arrange for re-inspection.

C. Reports: Prepare inspection reports and have them signed by authorities having jurisdiction.

D. Test sanitary drainage and vent piping according to procedures of authorities having jurisdiction or, in absence of published procedures, as follows:

1. Test for leaks and defects in new piping and parts of existing piping that have been altered, extended, or repaired. If testing is performed in segments, submit separate report for each test, complete with diagram of portion of piping tested.

2. Leave uncovered and unconcealed new, altered, extended, or replaced drainage and vent piping until it has been tested and approved. Expose work that was covered or concealed before it was tested.

3. Roughing-in Plumbing Test Procedure: Test drainage and vent piping, except outside leaders, on completion of roughing-in. Close openings in piping system and fill with water to point of overflow, but not less than 10-foot head of water. From 15 minutes before inspection starts to completion of inspection, water level must not drop. Inspect joints for leaks.

4. Finished Plumbing Test Procedure: After plumbing fixtures have been set and traps filled with water, test connections and prove they are gastight and watertight. Plug vent-stack openings on roof and building drains where they leave building. Introduce air into piping system equal to pressure of 1-inch wg. Use U-tube or manometer inserted in trap of water closet to measure this pressure. Air pressure must remain constant without introducing additional air throughout period of inspection. Inspect plumbing fixture connections for gas and water leaks.

5. Repair leaks and defects with new materials and retest piping, or portion thereof, until satisfactory results are obtained.

6. Prepare reports for tests and required corrective action.

7. Isolate test source and allow to stand for four hours. Leaks and loss in test pressure constitute defects that must be repaired.

8. Repair leaks and defects with new materials and retest piping, or portion thereof, until satisfactory results are obtained.

9. Prepare reports for tests and required corrective action.

3.07 CLEANING

A. Clean interior of piping. Remove dirt and debris as work progresses.

B. Protect drains during remainder of construction period to avoid clogging with dirt and debris and to prevent damage from traffic and construction work.

C. Place plugs in ends of uncompleted piping at end of day and when work stops.

3.08 PROTECTION

A. Exposed PVC Piping: Protect plumbing vents exposed to sunlight with two coats of water-based latex paint.

END OF SECTION 221316

22 13 19

SANITARY WASTE PIPING SPECIALTIES

PART 1 - GENERAL

1.01 RELATED DOCUMENTS

A. Drawings and general provisions of the Contract, including General and Supplementary Conditions and Division 01 Specification Sections, apply to this Section.

1.02 SUMMARY

A. This Section includes the following sanitary drainage piping specialties:

1. Cleanouts.
2. Floor drains.
3. Trench drains.
4. Roof flashing assemblies.
5. Through-penetration fire-stop assemblies.
6. Miscellaneous sanitary drainage piping specialties.
7. Flashing materials.

B. Related Sections:

1. Section 013300 Submittals.
2. Section 01524 Construction Waste Management
3. Section 01352 LEED Requirements
4. Section 01611 Environmental Management
5. Section 01570 Pollution Prevention and Control

1.03 DEFINITIONS

A. ABS: Acrylonitrile-butadiene-styrene plastic.

B. FOG: Fats, oils, and greases.

C. FRP: Fiberglass-reinforced plastic.

D. HDPE: High-density polyethylene plastic.

E. PE: Polyethylene plastic.

F. PP: Polypropylene plastic.

G. PVC: Polyvinyl chloride plastic.

1.04 SUBMITTALS

A. Shop Drawings: Show fabrication and installation details for frost-resistant vent terminals.

1. Show fabrication and installation details for frost-resistant vent terminals.

2. Dimensioned Outline Drawings of Equipment Unit: Identify center of gravity and locate and describe mounting and anchorage provisions.

3. Detailed description of equipment anchorage devices on which the certification is based and their installation requirements.

B. Field quality-control test reports.

C. Operation and Maintenance Data: For drainage piping specialties to include in emergency, operation, and maintenance manuals.

D. Product data. Unless otherwise indicated, submit the following for each type of product provided under work of this Section:

1. Recycled Content:

a. Indicate recycled content; indicate percentage of pre-consumer and post-consumer recycled content per unit of product.

2. Local/Regional Materials:

a. Indicate location of manufacturing facility; indicate distance between manufacturing facility and the project site.

b. Indicate location of extraction, harvesting, and recovery; indicate distance between extraction, harvesting, and recovery and the project site.

3. VOC data:

a. Submit manufacturer's product data for joint compounds. Indicate VOC and chemical component limits of the product. Submit MSDS highlighting VOC and chemical component limits. VOC contents and chemical component limits must be less than the limits of Green Seal’s Standard GS-11.

b. Submit manufacturer’s certification that products comply with Green Seal’s Standard GS-11

c. Submit environmental data in accordance with Table 1 of ASTM E2129 for products provided under work of this Section.

4. Submit the following according to Conditions of the Construction Contract.

   a. Product data. Unless otherwise indicated, submit the following for each type of product provided under work of this Section:

5. General: Submit additional LEED submittal requirements included in other sections of the Specifications.

6. LEED submittals are in addition to other submittals. If submitted item is identical to that submitted to comply with other requirements, submit duplicate copies as a separate submittal to verify compliance with indicated LEED requirements.

1.05 QUALITY ASSURANCE

A. Drainage piping specialties shall bear label, stamp, or other markings of specified testing agency.

1.06 COORDINATION

A. Coordinate size and location of concrete bases. Cast anchor-bolt inserts into bases. Concrete, reinforcement, and formwork requirements are specified in Division 03.

B. Coordinate size and location of roof penetrations.

PART 2 - PRODUCTS

2.01 ENVIRONMENTALLY PREFERABLE PRODUCTS

A. Provide environmentally preferable products to the greatest extent possible.

1. To the greatest extent possible, provide products and materials that promote stewardship of the earth's resources, promote good indoor environmental quality (IEQ), and promote efficiencies in operational performance.

B. Provide products listed on the EPA Comprehensive Procurement Guidelines to the greatest extent practicable.

C. Provide products listed on the USGBC Directory of Products and Services to the greatest extent possible.

2.02 RECYCLED CONTENT

A. Provide recycled content products to the greatest extent possible.

1. To the greatest extent possible, provide materials with recycled content such that the sum of post-consumer recycled content plus one-half of the post-industrial content constitutes at least 10% of the total value of the materials in the project.

2.03 REGIONAL MATERIALS

A. Provide Regional materials and products to the greatest extent possible that are extracted and manufactured within the region.

1. Provide materials and products that use a minimum of 20 % of building products that are manufactured regionally within a radius of 500 miles from the project site.

a. Manufacturing refers to the final assembly of components into the building product that is furnished and installed by the tradesman.

2. Of the regionally manufactured materials used and documented, use a minimum of 50% of building materials and products that are extracted, harvested or recovered (as well as manufactured) within 500 miles of the project site.

2.04 CLEANOUTS

A. Exposed Metal Cleanouts:

1. Manufacturers: Subject to compliance with requirements, provide products by one of the following:

a. Josam Company; Josam Div.

b. MIFAB, Inc.

c. Smith, Jay R. Mfg. Co.; Division of Smith Industries, Inc.

d. Tyler Pipe; Wade Div.

e. Watts Drainage Products Inc.

f. Zurn Plumbing Products Group; Specification Drainage Operation.

g.

2. Standard: ASME A112.36.2M for cast iron for cleanout test tee.

3. Size: Same as connected drainage piping

4. Body Material: Cast-iron soil pipe test tee as required to match connected piping.

5. Closure: Countersunk plug.

6. Closure Plug Size: Same as or not more than one size smaller than cleanout size.

7. Closure: Stainless-steel plug with seal.

B. Metal Floor Cleanouts:

1. Manufacturers: Subject to compliance with requirements, provide products by one of the following:

   a. Josam Company; Josam Div.

   b. Smith, Jay R. Mfg. Co.; Division of Smith Industries, Inc.

   c. Tyler Pipe; Wade Div.

   d. Watts Drainage Products Inc.

   e. Zurn Plumbing Products Group; Light Commercial Operation.

2. Standard: ASME A112.36.2M for adjustable housing cast-iron soil pipe with cast-iron ferrule heavy-duty, adjustable housing threaded, adjustable housing cleanout.

3. Size: Same as connected branch.

C. Cast-Iron Wall Cleanouts:

1. Manufacturers: Subject to compliance with requirements, provide products by one of the following:

   a. Josam Company; Josam Div.

   b. MIFAB, Inc.

   c. Smith, Jay R. Mfg. Co.; Division of Smith Industries, Inc.

   d. Tyler Pipe; Wade Div.

   e. Watts Drainage Products Inc.

   f. Zurn Plumbing Products Group; Specification Drainage Operation.

2. Standard: ASME A112.36.2M. Include wall access.

3. Size: Same as connected drainage piping.

4. Body: Hub less, cast-iron soil pipe test tee as required to match connected piping.

5. Size: Same as connected branch.

6. Body: PVC.

7. Closure Plug: PVC.

8. Riser: Drainage pipe fitting and riser to cleanout of same material as drainage piping.

2.05 FLOOR DRAINS

A. Cast-Iron Floor Drains:

1. Manufacturers: Subject to compliance with requirements, provide products by one of the following:

a. Josam Company; Josam Div.

b. MIFAB, Inc.

c. Smith, Jay R. Mfg. Co.; Division of Smith Industries, Inc.

d. Tyler Pipe; Wade Div.

e. Watts Drainage Products Inc.

f. Zurn Plumbing Products Group; Light Commercial Operation.

2. Standard: ASME A112.6.3.

3. Pattern: Sanitary drain.

4. Body Material: Gray iron.

B. Wall Box:

1. Manufacturers: Subject to compliance with requirements, provide products by one of the following:

a. Durgo, Inc.

b. Oatey.

c. RectorSeal.

d. Studor, Inc.

2. Description: White plastic housing with white plastic grille, made for recessed installation. Include bottom pipe connection and space to contain one air-admittance valve.

3. Size: About 9 inches wide by 8 inches high by 4 inches deep.

2.06 ROOF FLASHING ASSEMBLIES

A. Roof Flashing Assemblies:

1. Manufacturers: Subject to compliance with requirements, provide products by one of the following:

a. Acorn Engineering Company; Elmdor / Stoneman Div.

b. Thaler Metal Industries Ltd.

B. Description: Manufactured assembly made of from pipe, with galvanized-steel boot reinforcement and counter flashing fitting.

1. Open-Top Vent Cap: Without cap.

2. Low-Silhouette Vent Cap: With vandal-proof vent cap.

3. Extended Vent Cap: With field-installed, vandal-proof vent cap.

2.07 THROUGH-PENETRATION FIRESTOP ASSEMBLIES

A. Through-Penetration Fires top Assemblies:

1. Manufacturers: Subject to compliance with requirements, provide products by one of the following:

a. ProSet Systems Inc.

2. Standard: UL 1479 assembly of sleeve and stack fitting with firestopping plug.

3. Size: Same as connected soil, waste, or vent stack.

4. Sleeve: Molded PVC plastic, of length to match slab thickness and with integral nailing flange on one end for installation in cast-in-place concrete slabs.

5. Stack Fitting: ASTM A 48/A 48M, gray-iron, hubless-pattern, wye branch with neoprene O-ring at base and gray-iron plug in thermal-release harness. Include PVC protective cap for plug.

6. Special Coating: Corrosion resistant on interior of fittings.

2.08 MISCELLANEOUS SANITARY DRAINAGE PIPING SPECIALTIES

A. Open Drains:

1. Description: Shop or field fabricate from ASTM A 74, Service class, hub-and-spigot, cast-iron, soil-pipe fittings. Include P-trap, hub-and-spigot riser section; and where required, increaser fitting joined with ASTM C 564, rubber gaskets.

2. Size: Same as connected waste piping.

B. Deep-Seal Traps:

1. Description: Cast-iron or bronze casting, with inlet and outlet matching connected piping and cleanout trap-seal primer valve connection.

2. Size: Same as connected waste piping.

a. NPS 2: 4-inch- minimum water seal.

b. NPS 2-1/2 and Larger: 5-inch- minimum water seal.

C. Floor-Drain, Trap-Seal Primer Fittings:

1. Description: Cast iron, with threaded inlet and threaded or spigot outlet, and trap-seal primer valve connection.

2. Size: Same as floor drain outlet with NPS 1/2 side inlet.

D. Air-Gap Fittings:

1. Standard: ASME A112.1.2, for fitting designed to ensure fixed, positive air gap between installed inlet and outlet piping.

2. Body: Bronze or cast iron.

3. Inlet: Opening in top of body.

4. Outlet: Larger than inlet.

5. Size: Same as connected waste piping and with inlet large enough for associated indirect waste piping.

E. Sleeve Flashing Device:

1. Description: Manufactured, cast-iron fitting, with clamping device, that forms sleeve for pipe floor penetrations of floor membrane. Include galvanized-steel pipe extension in top of fitting that will extend 2 inches above finished floor and galvanized-steel pipe extension in bottom of fitting that will extend through floor slab.

2. Size: As required for close fit to riser or stack piping.

F. Stack Flashing Fittings:

1. Description: Counter flashing-type, cast-iron fitting, with bottom recess for terminating roof membrane, and with threaded or hub top for extending vent pipe.

2. Size: Same as connected stack vent or vent stack.

G. Vent Caps:

1. Description: Cast-iron body with threaded or hub inlet and vandal-proof design. Include vented hood and setscrews to secure to vent pipe.

2. Size: Same as connected stack vent or vent stack.

H. Frost-Resistant Vent Terminals:

1. Description: Manufactured or shop-fabricated assembly constructed of copper, lead-coated copper, or galvanized steel.

2. Design: To provide 1-inch enclosed air space between outside of pipe and inside of flashing collar extension, with counter flashing.

I. Expansion Joints:

1. Standard: ASME A112.21.2M.

2. Body: Cast iron with bronze sleeve, packing, and gland.

3. End Connections: Matching connected piping.

4. Size: Same as connected soil, waste, or vent piping.

2.09 FLASHING MATERIALS

A. Copper Sheet: ASTM B 152/B 152M, of the following minimum weights and thicknesses, unless otherwise indicated:

1. General Applications: 12 oz/sq. ft.

2. Vent Pipe Flashing: 8 oz/sq. ft.

B. Zinc-Coated Steel Sheet: ASTM A 653/A 653M, with 0.20 percent copper content and 0.04-inch minimum thickness, unless otherwise indicated. Include G90 hot-dip galvanized, mill-phosphatized finish for painting if indicated.

C. Elastic Membrane Sheet: ASTM D 4068, flexible, chlorinated polyethylene, 40-mil minimum thickness.

D. Fasteners: Metal compatible with material and substrate being fastened.

E. Metal Accessories: Sheet metal strips, clamps, anchoring devices, and similar accessory units required for installation; matching or compatible with material being installed.

F. Solder: ASTM B 32, lead-free alloy.

G. Bituminous Coating: SSPC-Paint 12, solvent-type, bituminous mastic.

PART 3 - EXECUTION

3.01 INSTALLATION

A. Install backwater valves in building drain piping. For interior installation, provide cleanout deck plate flush with floor and centered over backwater valve cover, and of adequate size to remove valve cover for servicing.

B. Install cleanouts in aboveground piping and building drain piping according to the following, unless otherwise indicated:

1. Size same as drainage piping up to NPS 4. Use NPS 4 for larger drainage piping unless larger cleanout is indicated.

2. Locate at each change in direction of piping greater than 45 degrees.

3. Locate at minimum intervals of 75 feet for piping NPS 4 and smaller and 100 feet for larger piping.

4. Locate at base of each vertical soil and waste stack.

C. For floor cleanouts for piping below floors, install cleanout deck plates with top flush with finished floor.

D. For cleanouts located in concealed piping, install cleanout wall access covers, of types indicated, with frame and cover flush with finished wall.

E. Install floor drains at low points of surface areas to be drained. Set grates of drains flush with finished floor, unless otherwise indicated.

1. Position floor drains for easy access and maintenance.

2. Set floor drains below elevation of surrounding finished floor to allow floor drainage. Set with grates depressed according to the following drainage area radii:

a. Radius, 30 Inches or Less: Equivalent to 1 percent slope, but not less than 1/4-inch total depression.

b. Radius, 30 to 60 Inches: Equivalent to 1 percent slope.

c. Radius, 60 Inches or Larger: Equivalent to 1 percent slope, but not greater than 1-inch total depression.

3. Install floor-drain flashing collar or flange so no leakage occurs between drain and adjoining flooring. Maintain integrity of waterproof membranes where penetrated.

4. Install individual traps for floor drains connected to sanitary building drain, unless otherwise indicated.

F. Install roof flashing assemblies on sanitary stack vents and vent stacks that extend through roof.

G. Install flashing fittings on sanitary stack vents and vent stacks that extend through roof.

H. Install through-penetration firestop assemblies in plastic stacks at floor penetrations.

I. Assemble open drain fittings and install with top of hub 2 inches above floor.

J. Install deep-seal traps on floor drains and other waste outlets, as required.

K. Install floor-drain, trap-seal primer fittings on inlet to floor drains that require trap-seal primer connection.

1. Exception: Fitting may be omitted if trap has trap-seal primer connection.

2. Size: Same as floor drain inlet.

L. Install air-gap fittings on draining-type backflow preventers and on indirect-waste piping discharge into sanitary drainage system.

M. Install sleeve flashing device with each riser and stack passing through floors with waterproof membrane.

N. Install vent caps on each vent pipe passing through roof.

O. Install frost-resistant vent terminals on each vent pipe passing through roof. Maintain 1-inch clearance between vent pipe and roof substrate.

P. Install expansion joints on vertical stacks and conductors. Position expansion joints for easy access and maintenance.

Q. Install frost-proof vent caps on each vent pipe passing through roof. Maintain 1-inch clearance between vent pipe and roof substrate.

3.02 FLASHING INSTALLATION

A. Fabricate flashing from single piece unless large pans, sumps, or other drainage shapes are required. Join flashing according to the following if required:

1. Copper Sheets: Solder joints of copper sheets.

B. Install sheet flashing on pipes, sleeves, and specialties passing through or embedded in floors and roofs with waterproof membrane.

1. Pipe Flashing: Sleeve type, matching pipe size, with minimum length of 10 inches, and skirt or flange extending at least 8 inches around pipe.

2. Sleeve Flashing: Flat sheet, with skirt or flange extending at least 8 inches around sleeve.

3. Embedded Specialty Flashing: Flat sheet, with skirt or flange extending at least 8 inches around specialty.

C. Set flashing on floors and roofs in solid coating of bituminous cement.

D. Secure flashing into sleeve and specialty clamping ring or device.

E. Install flashing for piping passing through roofs with counterflashing or commercially made flashing fittings, according to Division 07 Section "Sheet Metal Flashing and Trim."

F. Extend flashing up vent pipe passing through roofs and turn down into pipe, or secure flashing into cast-iron sleeve having calking recess.

G. Fabricate and install flashing and pans, sumps, and other drainage shapes.

3.03 FIELD QUALITY CONTROL

A. Perform tests and inspections and prepare test reports.

1. Manufacturer's Field Service: Engage a factory-authorized service representative to inspect field-assembled Neutralization tanks and their installation, including piping and electrical connections, and to assist in testing.

B. Tests and Inspections:

1. Leak Test: After installation, charge system and test for leaks. Repair leaks and retest until no leaks exist.

2. Test and adjust controls and safeties. Replace damaged and malfunctioning controls and equipment.

3.04 PROTECTION

A. Protect drains during remainder of construction period to avoid clogging with dirt or debris and to prevent damage from traffic or construction work.

B. Place plugs in ends of uncompleted piping at end of each day or when work stops.

END OF SECTION 221319

23 05 00

COMMON WORK RESULTS FOR HVAC

PART 1 - GENERAL

1.01 RELATED DOCUMENTS

A. Drawings and general provisions of the Contract, including General and Supplementary Conditions and Division 01 Specification Sections, apply to this Section.

B. Coordinate with Commissioning Requirements indicated in Section 019113. This contractor is responsible to comply with all requirements for the above section.

1.02 SUMMARY

A. This Section includes the following:

B. Related Sections:

1. Section 013300 Submittals.

1.03 DEFINITIONS

A. Finished Spaces: Spaces other than mechanical and electrical equipment rooms, furred spaces, pipe and duct chases, unheated spaces immediately below roof, spaces above ceilings, unexcavated spaces, crawlspaces, and tunnels.

B. Exposed, Interior Installations: Exposed to view indoors. Examples include finished occupied spaces and mechanical equipment rooms.

C. Exposed, Exterior Installations: Exposed to view outdoors or subject to outdoor ambient temperatures and weather conditions. Examples include rooftop locations.

D. Concealed, Interior Installations: Concealed from view and protected from physical contact by building occupants. Examples include above ceilings and chases.

E. Concealed, Exterior Installations: Concealed from view and protected from weather conditions and physical contact by building occupants but subject to outdoor ambient temperatures. Examples include installations within unheated shelters.

F. The following are industry abbreviations for plastic materials:

G. The following are industry abbreviations for rubber materials:

1.04 SUBMITTALS

A. Product Data: For the following:

B. Welding certificates.

C. Product data. Unless otherwise indicated, submit the following for each type of product provided under work of this Section:

1. VOC data:

a. Submit manufacturer's product data for joint compounds. Indicate VOC and chemical component limits of the product. Submit MSDS highlighting VOC and chemical component limits. VOC contents and chemical component limits must be less than the limits of Green Seal’s Standard GS-11.

b. Submit manufacturer’s certification that products comply with Green Seal’s Standard GS-11

c. Submit environmental data in accordance with Table 1 of ASTM E2129 for products provided under work of this Section.

2. Submit the following according to Conditions of the Construction Contract.

a. Product data. Unless otherwise indicated, submit the following for each type of product provided under work of this Section:

1.05 QUALITY ASSURANCE

A. Steel Support Welding: Qualify processes and operators according to AWS D1.1, "Structural Welding Code--Steel."

B. Steel Pipe Welding: Qualify processes and operators according to ASME Boiler and Pressure Vessel Code: Section IX, "Welding and Brazing Qualifications."

C. Electrical Characteristics for HVAC Equipment: Equipment of higher electrical characteristics may be furnished provided such proposed equipment is approved in writing and connecting electrical services, circuit breakers, and conduit sizes are appropriately modified. If minimum energy ratings or efficiencies are specified, equipment shall comply with requirements.

1.06 DELIVERY, STORAGE, AND HANDLING

A. Deliver pipes and tubes with factory-applied end caps. Maintain end caps through shipping, storage, and handling to prevent pipe end damage and to prevent entrance of dirt, debris, and moisture.

B. Store plastic pipes protected from direct sunlight. Support to prevent sagging and bending.

1.07 COORDINATION

A. Arrange for pipe spaces, chases, slots, and openings in building structure during progress of construction, to allow for HVAC installations.

B. Coordinate installation of required supporting devices and set sleeves in poured-in-place concrete and other structural components as they are constructed.

C. Coordinate requirements for access panels and doors for HVAC items requiring access that are concealed behind finished surfaces. Access panels and doors are specified in Division 08 Section "Access Doors and Frames."

D. Prepare Coordination / Installation Shop drawings to a scale of 1/4"=1'0" or larger; detailing major elements, components, and systems of mechanical equipment and materials in relationship with other systems, installations, and building components. Indicate locations where space is limited for installation and access and where sequencing and coordination of installations are of importance to the efficient flow of the Work, including (but not necessarily limited to) the following:

PART 2 - PRODUCTS

2.01 ENVIRONMENTALLY PREFERABLE PRODUCTS

A. Provide environmentally preferable products to the greatest extent possible.

1. To the greatest extent possible, provide products and materials that promote stewardship of the earth's resources, promote good indoor environmental quality (IEQ), and promote efficiencies in operational performance.

B. Provide products listed on the EPA Comprehensive Procurement Guidelines to the greatest extent practicable.

C. Provide products listed on the USGBC Directory of Products and Services to the greatest extent possible.

2.02 RECYCLED CONTENT

A. Provide recycled content products to the greatest extent possible.

1. To the greatest extent possible, provide materials with recycled content such that the sum of post-consumer recycled content plus one-half of the post-industrial content constitutes at least 10% of the total value of the materials in the project.

2.03 REGIONAL MATERIALS

A. Provide Regional materials and products to the greatest extent possible that are extracted and manufactured within the region.

1. Provide materials and products that use a minimum of 20 % of building products that are manufactured regionally within a radius of 500 miles from the project site.

a. Manufacturing refers to the final assembly of components into the building product that is furnished and installed by the tradesman.

2. Of the regionally manufactured materials used and documented, use a minimum of 50% of building materials and products that are extracted, harvested or recovered (as well as manufactured) within 500 miles of the project site.

2.04 SCOPE OF SERVICES

2.05 APPILCABLE CODES

A. Obtain all required permits and inspections for all work required by the Contract Documents and pay all required fees in connection thereof.

B. Arrange with the serving utility companies for the connection of all required utilities and pay all charges, meter charges, connection fees and inspection fees, if required.

C. Comply with all applicable codes, specifications, local ordinances, industry standards, utility company regulations and the applicable requirements of the following nationally accepted codes and standards:

D. Where differences existing between the Contract Documents and applicable state or city building codes, state and local ordinances, industry standards, utility company regulations and the applicable requirements of the above listed nationally accepted codes and standards, the more stringent or costly application shall govern. Promptly notify the Engineer in writing of all differences.

E. When directed in writing by the Engineer, remove all work installed that does not comply with the Contract Documents and applicable state or city building codes, state and local ordinances, industry standards, utility company regulations and the applicable requirements of the above listed nationally accepted codes and standards, correct the deficiencies, and complete the work at no additional cost to the Owner.

F. Contractor will comply will all current (date of permit) City of Richmond Building Codes and ordnances for construction.

2.06 DRAWINGS & SPECIFICATIONS

A. These Specifications are intended to supplement the Drawings and it will not be the province of the Specifications to mention any part of the work which the Drawings are competent to fully explain in every particular and such omission is not to relieve the Contractor from carrying out portions indicated on the Drawings only.

B. Should items be required by these Specifications and not indicated on the Drawings, they are to be supplied even if of such nature that they could have been indicated thereon. In case of disagreement between Drawings and Specifications, or within either Drawings or Specifications, the better quality or greater quantity of work shall be estimated and the matter referred to the Architect or Engineer for review with a request for information and clarification at least 7 working days prior to bid opening date for issuance of an addendum.

C. The listing of product manufacturers, materials and methods in the various sections of the Specifications, and indicated on the Drawings, is intended to establish a standard of quality only. It is not the intention of the Owner or Engineer to discriminate against any product, material or method that is equal to the standards as indicated and/or specified, nor is it intended to preclude open, competitive bidding. The fact that a specific manufacturer is listed as an acceptable manufacturer should not be interpreted to mean that the manufacturers' standard product will meet the requirements of the project design, Drawings, Specifications and space constraints.

D. The Architect or Engineer and Owner shall be the sole judge of quality and equivalence of equipment, materials and methods.

E. Products by other reliable manufacturers, other materials, and other methods, will be accepted as outlined, provided they have equal capacity, construction, and performance. However, under no circumstances shall any substitution by made without the written permission of the Architect or Engineer and Owner. Request for prior approval must be made in writing 10 days prior to the bid date without fail.

F. Wherever a definite product, material or method is specified and there is not a statement that another product, material or method will be acceptable, it is the intention of the Owner or Engineer that the specified product, material or method is the only one that shall be used without prior approval.

G. Wherever a definite material or manufacturer's product is specified and the Specification states that products of similar design and equal construction from the specified list of manufacturers may be substituted, it is the intention of the Owner or Engineer that products of manufacturers that are specified are the only products that will be acceptable and that products of other manufacturers will not be considered for substitution without approval.

H. Wherever a definite product, material or method is specified and there is a statement that "OR EQUAL" product, material or method will be acceptable, it is the intention of the Owner or Engineer that the specified product, material or method or an "OR EQUAL" product, material or method may be used if it complies with the specifications and is submitted for review to the Engineer as outline herein. Where permission to use substituted or alternative equipment on the project is granted by the Owner or Engineer in writing, it shall be the responsibility of the Contractor or Subcontractor involved to verify that the equipment will fit in the space available which includes allowances for all required Code and maintenance clearances, and to coordinate all equipment structural support, plumbing and electrical requirements and provisions with the Mechanical (HVAC) and Plumbing Design Documents and all other trades.

I. Coordinate with Division 1 requirements for substitution, unless noted otherwise the Contractors wishing to substitute products, materials or methods from those indicated or specified, shall submit such requests to the Owner or Engineer in writing and within THIRTY (30) WORKING DAYS OF NOTIFICATION OF CONTRACT AWARD. Requests for permission to utilize alternates or substitutions will not be considered after that time, unless the Specified item is unavailable or will adversely effect to completion of the Project. Claims submitted for consideration will require notarized letters from all parties involved and will be considered only if the Contractor has been timely in his delivery for review of all required equipment and material submittals. Owner or Engineer will investigate such requests for substitution and if acceptable will issue a letter allowing the substitution.

J. If any request for a substitution of product, material or method is rejected, the Contractor will automatically be required to furnish the product, material or method named in the Specifications. Repetitive requests for substitutions will not be considered.

K. Requests shall be bound and shall consist of three (3) sets of descriptive literature and performance data covering each item of equipment or material. The submittal shall include the following:

L. The Owner or Engineer will investigate all requests for substitutions when submitted in accordance with above and if accepted, will issue a letter allowing the substitutions. The Engineer shall be the sole authority to approve or disapprove any and all substitutions.

M. Where equipment other than that used in the design as specified or shown on the Drawings is substituted (either from an approved manufacturers list or by submittal review), it shall be the responsibility of the substituting Contractor to coordinate space requirements, building provisions and connection requirements with his trades and all other trades and pay all additional costs to other trades, the Owner, the Architect or Engineer, if any, due to the substitutions.

2.07 RECORD DOCUMENTS

A. Prepare record documents in accordance with the requirements in Special Project Requirements, in addition to the requirements specified in Division 15, indicate the following installed conditions.

B. The Contractor shall maintain a set of clearly marked black line record "AS-BUILT" prints on the job site on which he shall mark all work details, alterations to meet site conditions and changes made by "Change Order" notices. These shall be kept available for inspection by the Owner, Architect or Engineer at all times.

C. Contractor Startup and Commissioning Verification - the system will provide a secure page for each integrated system allowing the contractor responsible for each phase to sign on and certify the status of each piece of equipment.

D. Refer to Division 1 for additional requirements concerning record drawings. If the Contractor does not keep an accurate set of as-built drawings, the pay request may be altered or delayed at the request of the Architect. Mark the drawings with a colored pencil. Delivery of as built prints and re-producible is a condition of final acceptance.

E. The record prints shall be updated on a daily basis and shall indicate accurate dimensions for all buried or concealed work, precise locations of all concealed pipe or duct, locations of all concealed valves, controls and devices and any deviations from the work shown on the Construction Documents which are required for coordination. All dimensions shall include at least two dimensions to permanent structure points.

F. At the Engineer's option, the Contractor shall transfer all data from the record "AS-BUILT" prints to an electronic media such as AutoCAD latest release, in order to plot the reproducible media "AS-BUILT" drawings. Since data stored on electronic media can deteriorate undetected or be modified without the Engineer's knowledge, the AutoCAD electronic drawing files are provided without warranty or obligation on the part of the Engineer as to accuracy or information contained in the files. All information in the files shall be independently verified by the user. Any user shall agree to indemnify and hold the Engineer harmless from any and all claims, damages, losses, and expenses including but not limited to Attorney's fees arising out of the use of the AutoCAD drawing files. Engineer shall furnish to the Contractor electronic media files of Contract Documents for the Contractor to use for inputting of the data from the record "AS-BUILT" prints and the Contractor shall return the revised electronic files on CD ROM properly labeled to the Engineer and shall submit the plotted reproducible drawings and three (3) sets of black line prints to the Architect or Engineer for review prior to scheduling the final inspection at the completion of the work. The reproducible record "AS-BUILT" drawings shall have the Engineers Name and Seal removed or blanked out and shall be clearly marked and signed on each sheet as described in paragraph F. below.

G. of the work, the Contractor shall transfer all marks from the submit a set of clear concise set of reproducible record "AS-BUILT" drawings and shall submit the reproducible drawings with corrections made by a competent draftsman and three (3) sets of black line prints to the Architect or Engineer for review prior to scheduling the final inspection at the completion of the work. The reproducible record "AS-BUILT" drawings shall have the Engineers Name and Seal removed or blanked out and shall be clearly marked and signed on each sheet.

2.08 PIPE, TUBE, AND FITTINGS

A. Refer to individual Division 23 piping Sections for pipe, tube, and fitting materials and joining methods.

B. Pipe Threads: ASME B1.20.1 for factory-threaded pipe and pipe fittings.

2.09 JOINING MATERIALS

A. Refer to individual Division 23 piping Sections for special joining materials not listed below.

B. Pipe-Flange Gasket Materials: Suitable for chemical and thermal conditions of piping system contents.

1. Full-Face Type: For flat-face, Class 125, cast-iron and cast-bronze flanges.

2. Narrow-Face Type: For raised-face, Class 250, cast-iron and steel flanges.

C. Flange Bolts and Nuts: ASME B18.2.1, carbon steel, unless otherwise indicated.

D. Plastic, Pipe-Flange Gasket, Bolts, and Nuts: Type and material recommended by piping system manufacturer, unless otherwise indicated.

E. Solder Filler Metals: ASTM B 32, lead-free alloys. Include water-flushable flux according to ASTM B 813.

F. Brazing Filler Metals: AWS A5.8, BCuP Series, copper-phosphorus alloys for general-duty brazing, unless otherwise indicated; and AWS A5.8, BAg1, silver alloy for refrigerant piping, unless otherwise indicated.

G. Welding Filler Metals: Comply with AWS D10.12 for welding materials appropriate for wall thickness and chemical analysis of steel pipe being welded.

H. Solvent Cements for Joining Plastic Piping:

I. Fiberglass Pipe Adhesive: As furnished or recommended by pipe manufacturer.

2.10 TRANSITION FITTINGS

A. Plastic-to-Metal Transition Fittings: PVC one-piece fitting with manufacturer's Schedule 80 equivalent dimensions; one end with threaded brass insert, and one solvent-cement-joint end.

1. Eslon Thermoplastics.

B. Plastic-to-Metal Transition Adaptors: One-piece fitting with manufacturer's SDR 11 equivalent dimensions; one end with threaded brass insert, and one solvent-cement-joint end.

1. Thompson Plastics, Inc.

C. Plastic-to-Metal Transition Unions: MSS SP-107, PVC four-part union. Include brass end, solvent-cement-joint end, rubber O-ring, and union nut.

1. NIBCO INC.

2. NIBCO, Inc.; Chemtrol Div.

2.11 DIELECTRIC FITTINGS

A. Description: Combination fitting of copper alloy and ferrous materials with threaded, solder-joint, plain, or weld-neck end connections that match piping system materials.

B. Insulating Material: Suitable for system fluid, pressure, and temperature.

C. Dielectric Unions: Factory-fabricated, union assembly, for 250-psig minimum working pressure at 180 deg F.

1. Capitol Manufacturing Co.

2. Central Plastics Company.

3. Eclipse, Inc.

4. Epco Sales, Inc.

5. Hart Industries, International, Inc.

6. Watts Industries, Inc.; Water Products Div.

7. Zurn Industries, Inc.; Wilkins Div.

D. Dielectric Flanges: Factory-fabricated, companion-flange assembly, for 150- or 300-psig minimum working pressure as required to suit system pressures.

1. Capitol Manufacturing Co.

2. Central Plastics Company.

3. Epco Sales, Inc.

4. Watts Industries, Inc.; Water Products Div.

E. Dielectric-Flange Kits: Companion-flange assembly for field assembly. Include flanges, full-face- or ring-type neoprene or phenolic gasket, phenolic or polyethylene bolt sleeves, phenolic washers, and steel backing washers.

1. Advance Products & Systems, Inc.
2. Calpico, Inc.
3. Central Plastics Company.
4. Pipeline Seal and Insulator, Inc.

F. Dielectric Couplings: Galvanized-steel coupling with inert and noncorrosive, thermoplastic lining; threaded ends; and 300-psig minimum working pressure at 225 deg F.

1. Calpico, Inc.
2. Lochinvar Corp.

G. Dielectric Nipples: Electroplated steel nipple with inert and noncorrosive, thermoplastic lining; plain, threaded, or grooved ends; and 300-psig minimum working pressure at 225 deg F.

1. Perfection Corp.
2. Precision Plumbing Products, Inc.
3. Sioux Chief Manufacturing Co., Inc.
4. Victaulic Co. of America.

2.12 MECHANICAL SLEEVE SEALS

A. Description: Modular sealing element unit, designed for field assembly, to fill annular space between pipe and sleeve.

1. Advance Products & Systems, Inc.
2. Calpico, Inc.
3. Metraflex Co.
4. Pipeline Seal and Insulator, Inc.

2.13 SLEEVES

A. Galvanized-Steel Sheet: 0.0239-inch minimum thickness; round tube closed with welded longitudinal joint.

B. Steel Pipe: ASTM A 53, Type E, Grade B, Schedule 40, galvanized, plain ends.

C. Cast Iron: Cast or fabricated "wall pipe" equivalent to ductile-iron pressure pipe, with plain ends and integral waterstop, unless otherwise indicated.

D. Stack Sleeve Fittings: Manufactured, cast-iron sleeve with integral clamping flange. Include clamping ring and bolts and nuts for membrane flashing.

E. Molded PVC: Permanent, with nailing flange for attaching to wooden forms.

F. PVC Pipe: ASTM D 1785, Schedule 40.

G. Molded PE: Reusable, PE, tapered-cup shaped, and smooth-outer surface with nailing flange for attaching to wooden forms.

2.14 ESCUTCHEONS

A. Description: Manufactured wall and ceiling escutcheons and floor plates, with an ID to closely fit around pipe, tube, and insulation of insulated piping and an OD that completely covers opening.

B. One-Piece, Deep-Pattern Type: Deep-drawn, box-shaped brass with polished chrome-plated finish.

C. One-Piece, Cast-Brass Type: With set screw.

D. Split-Casting, Cast-Brass Type: With concealed hinge and set screw.

E. One-Piece, Stamped-Steel Type: With set screw and chrome-plated finish.

F. Split-Plate, Stamped-Steel Type: With concealed set screw or spring clips, and chrome-plated finish.

G. One-Piece, Floor-Plate Type: Cast-iron floor plate.

H. Split-Casting, Floor-Plate Type: Cast brass with concealed hinge and set screw.

2.15 GROUT & FOUNDATION

A. Description: ASTM C 1107, Grade B, nonshrink and nonmetallic, dry hydraulic-cement grout.

B. Foundations and pads shall be constructed of reinforced concrete and shall be sized and reinforced as noted or detailed on the Drawings. As a minimum, pads shall be 6" thick, by width and length as required by item it is under, reinforced with 6 x 6 W2.9 x W2.9 Welded Wire mesh.

C. Support attachments, unless otherwise noted on shown, shall be securely attached to the items foundation, pad or building structure, per manufacturers recommendations and shall be approved by the Architect.

PART 3 - EXECUTION

3.01 PIPING SYSTEMS - COMMON REQUIREMENTS

A. Install piping according to the following requirements and Division 23 Sections specifying piping systems.

B. Drawing plans, schematics, and diagrams indicate general location and arrangement of piping systems. Indicated locations and arrangements were used to size pipe and calculate friction loss, expansion, pump sizing, and other design considerations. Install piping as indicated unless deviations to layout are approved on Coordination Drawings.

C. Install piping in concealed locations, unless otherwise indicated and except in equipment rooms and service areas.

D. Install piping indicated to be exposed and piping in equipment rooms and service areas at right angles or parallel to building walls. Diagonal runs are prohibited unless specifically indicated otherwise.

E. Install piping above accessible ceilings to allow sufficient space for ceiling panel removal.

F. Install piping to permit valve servicing.

G. Install piping at indicated slopes.

H. Install piping free of sags and bends.

I. Install fittings for changes in direction and branch connections.

J. Install piping to allow application of insulation.

K. Select system components with pressure rating equal to or greater than system operating pressure.

L. Install escutcheons for penetrations of walls, ceilings, and floors according to the following:

1. Piping with Fitting or Sleeve Protruding from Wall: One-piece, deep-pattern type.

2. Chrome-Plated Piping: One-piece, cast-brass type with polished chrome-plated finish.

3. Insulated Piping: One-piece, stamped-steel type with spring clips.

4. Bare Piping at Wall and Floor Penetrations in Finished Spaces: One-piece, cast-brass type with polished chrome-plated finish.

5. Bare Piping at Wall and Floor Penetrations in Finished Spaces: One-piece, stamped-steel type.

6. Bare Piping at Ceiling Penetrations in Finished Spaces: One-piece or split-casting, cast-brass type with polished chrome-plated finish.

7. Bare Piping at Ceiling Penetrations in Finished Spaces: Split-plate, stamped-steel type with concealed hinge and set screw.

8. Bare Piping in Unfinished Service Spaces: One-piece, cast-brass type with polished chrome-plated finish.

9. Bare Piping in Unfinished Service Spaces: One-piece, stamped-steel type with concealed or exposed-rivet hinge and set screw or spring clips.

10. Bare Piping in Equipment Rooms: One-piece, cast-brass type.

11. Bare Piping in Equipment Rooms: One-piece, stamped-steel type with set screw.

12. Bare Piping at Floor Penetrations in Equipment Rooms: One-piece, floor-plate type.

M. Sleeves are not required for core-drilled holes.

N. Permanent sleeves are not required for holes formed by removable PE sleeves.

O. Install sleeves for pipes passing through concrete and masonry walls and concrete floor and roof slabs.

P. Install sleeves for pipes passing through concrete and masonry walls, gypsum-board partitions, and concrete floor and roof slabs.

1. Exception: Extend sleeves installed in floors of mechanical equipment areas or other wet areas 2 inches above finished floor level. Extend cast-iron sleeve fittings below floor slab as required to secure clamping ring if ring is specified.

2. Steel Pipe Sleeves: For pipes smaller than NPS 6.

3. Steel Sheet Sleeves: For pipes NPS 6 and larger, penetrating gypsum-board partitions.

4. Stack Sleeve Fittings: For pipes penetrating floors with membrane waterproofing. Secure flashing between clamping flanges. Install section of cast-iron soil pipe to extend sleeve to 2 inches above finished floor level. Refer to Division 07 Section "Sheet Metal Flashing and Trim" for flashing.

1) Seal space outside of sleeve fittings with grout.

Q. Aboveground, Exterior-Wall Pipe Penetrations: Seal penetrations using sleeves and mechanical sleeve seals. Select sleeve size to allow for 1-inch annular clear space between pipe and sleeve for installing mechanical sleeve seals.

R. Underground, Exterior-Wall Pipe Penetrations: Install cast-iron "wall pipes" for sleeves. Seal pipe penetrations using mechanical sleeve seals. Select sleeve size to allow for 1-inch annular clear space between pipe and sleeve for installing mechanical sleeve seals.

S. Fire-Barrier Penetrations: Maintain indicated fire rating of walls, partitions, ceilings, and floors at pipe penetrations. Seal pipe penetrations with firestop materials. Refer to Division 07 Section "Penetration Firestopping" for materials.

T. Verify final equipment locations for roughing-in.

U. Refer to equipment specifications in other Sections of these Specifications for roughing-in requirements.

3.02 PIPING JOINT CONSTRUCTION

A. Join pipe and fittings according to the following requirements and Division 23 Sections specifying piping systems.

B. Ream ends of pipes and tubes and remove burrs. Bevel plain ends of steel pipe.

C. Remove scale, slag, dirt, and debris from inside and outside of pipe and fittings before assembly.

D. Soldered Joints: Apply ASTM B 813, water-flushable flux, unless otherwise indicated, to tube end. Construct joints according to ASTM B 828 or CDA's "Copper Tube Handbook," using lead-free solder alloy complying with ASTM B 32.

E. Brazed Joints: Construct joints according to AWS's "Brazing Handbook," "Pipe and Tube" Chapter, using copper-phosphorus brazing filler metal complying with AWS A5.8.

F. Threaded Joints: Thread pipe with tapered pipe threads according to ASME B1.20.1. Cut threads full and clean using sharp dies. Ream threaded pipe ends to remove burrs and restore full ID. Join pipe fittings and valves as follows:

G. Welded Joints: Construct joints according to AWS D10.12, using qualified processes and welding operators according to Part 1 "Quality Assurance" Article.

H. Flanged Joints: Select appropriate gasket material, size, type, and thickness for service application. Install gasket concentrically positioned. Use suitable lubricants on bolt threads.

I. Plastic Piping Solvent-Cement Joints: Clean and dry joining surfaces. Join pipe and fittings according to the following:

J. Plastic Pressure Piping Gasketed Joints: Join according to ASTM D 3139.

K. Plastic Non-pressure Piping Gasketed Joints: Join according to ASTM D 3212.

L. PE Piping Heat-Fusion Joints: Clean and dry joining surfaces by wiping with clean cloth or paper towels. Join according to ASTM D 2657.

M. Fiberglass Bonded Joints: Prepare pipe ends and fittings, apply adhesive, and join according to pipe manufacturer's written instructions.

3.03 PIPING CONNECTIONS

A. Make connections according to the following, unless otherwise indicated:

3.04 EQUIPMENT INSTALLATION - COMMON REQUIREMENTS

A. Install equipment to allow maximum possible headroom unless specific mounting heights are not indicated.

B. Install equipment level and plumb, parallel and perpendicular to other building systems and components in exposed interior spaces, unless otherwise indicated.

C. Install HVAC equipment to facilitate service, maintenance, and repair or replacement of components. Connect equipment for ease of disconnecting, with minimum interference to other installations. Extend grease fittings to accessible locations.

D. Install equipment to allow right of way for piping installed at required slope.

3.05 PAINTING

A. Painting of HVAC systems, equipment, and components is specified in Division 09 Sections "Interior Painting" and "Exterior Painting."

B. Damage and Touchup: Repair marred and damaged factory-painted finishes with materials and procedures to match original factory finish.

3.06 CONCRETE BASES

A. Concrete Bases: Anchor equipment to concrete base according to equipment manufacturer's written instructions and according to seismic codes at Project.

3.07 ERECTION OF METAL SUPPORTS AND ANCHORAGES

A. Refer to Division 05 Section "Metal Fabrications" for structural steel.

B. Cut, fit, and place miscellaneous metal supports accurately in location, alignment, and elevation to support and anchor HVAC materials and equipment.

C. Field Welding: Comply with AWS D1.1.

3.08 ERECTION OF WOOD SUPPORTS AND ANCHORAGES

A. Cut, fit, and place wood grounds, nailers, blocking, and anchorages to support, and anchor HVAC materials and equipment.

B. Select fastener sizes that will not penetrate members if opposite side will be exposed to view or will receive finish materials. Tighten connections between members. Install fasteners without splitting wood members.

C. Attach to substrates as required to support applied loads.

3.09 GROUTING

A. Mix and install grout for HVAC equipment base bearing surfaces, pump and other equipment base plates, and anchors.

B. Clean surfaces that will come into contact with grout.

C. Provide forms as required for placement of grout.

D. Avoid air entrapment during placement of grout.

E. Place grout, completely filling equipment bases.

F. Place grout on concrete bases and provide smooth bearing surface for equipment.

G. Place grout around anchors.

H. Cure placed grout.

END OF SECTION 23 05 00

23 05 13

COMMON MOTOR REQUIREMENTS FOR HVAC EQUIPMENT

PART 1 - GENERAL

1.01 SUMMARY

A. Related Sections:

1. Section 013300 Submittals.
2. Section 01524 Construction Waste Management
3. Section 01611 Environmental Management
4. Section 01570 Pollution Prevention and Control

1.02 GENERAL REQUIREMENTS

A. The requirements of the General Conditions and Supplementary Conditions apply to all work herein.

B. Coordinate with Commissioning Requirements indicated in Section 019113. This contractor is responsible to comply with all requirements for the above section.

1.03 SCOPE

A. Scope of the Work shall include the furnishing and complete installation of the equipment covered by this Section, with all auxiliaries, ready for Owner's use.

1.04 WORK SPECIFIED ELSEWHERE

A. Painting

B. Automatic temperature controls.

C. Power control wiring to motors and equipment.

1.05 REFERENCES

A. AFBMA 9 – Load Ratings and Fatigue Life for Ball Bearings.

B. AFBMA 11 – Load Ratings and Fatigue Life for Roller Bearings.

C. ANSI/IEEE 112 – Test Procedure for Polyphase Induction Motors and Generators.

D. ANSI/NEMA MG 1 – Motors and Generators.

E. ANSI/NEMA MG 2 – Safety Standard for Construction and Guide for Selection, Installation and Use of Electric Motors.

F. ANSI/NFPA 70 – National Electrical Code, 2017 Edition.

G. ANSI/UL 674 – Electric Motors and Generators for Use in Hazardous (Classified) Locations.

H. ANSI/UL 1004 – Electric Motors.

I. EISA - The Energy Independence & Securities Act 2007.

J. IECC – International Energy Conservation Code, 2015 edition with local amendments.

K. IMC – International Mechanical Code, 2015 edition with local amendments.

1.06 WARRANTY

A. Warrant the Work specified herein for one (1) year and motors for five (5) years beginning on data of Substantial Completion against becoming unserviceable or causing an objectionable appearance resulting from either defective or non-conforming materials or workmanship.

1.07 QUALITY ASSURANCE

A. Motors associated with variable frequency drives (VFD) shall be inverter-duty rated, and provided with grounded shaft or ceramic bearings to insulate shaft, and Class F 105 degrees C rise insulation. Ref. NEMA MG1 Part 31.

1.08 SUBMITTALS

A. Submit shop drawings and product data under provisions of Section 23 05 00.

B. Shop Drawings: Provide wiring diagrams with electrical characteristics and connection requirements.

C. Product Data: Submit schedules, charts, literature, and illustrations to indicate the performance, fabrication procedures variations, and accessories.

D. Product data. Unless otherwise indicated, submit the following for each type of product provided under work of this Section:

1. Recycled Content:

a. Indicate recycled content; indicate percentage of pre-consumer and post-consumer recycled content per unit of product.

2. Local/Regional Materials:

a. Indicate location of manufacturing facility; indicate distance between manufacturing facility and the project site.

b. Indicate location of extraction, harvesting, and recovery; indicate distance between extraction, harvesting, and recovery and the project site.

3. VOC data:

a. Submit manufacturer's product data for joint compounds. Indicate VOC and chemical component limits of the product. Submit MSDS highlighting VOC and chemical component limits. VOC contents and chemical component limits must be less than the limits of Green Seal’s Standard GS-11.

b. Submit manufacturer’s certification that products comply with Green Seal’s Standard GS-11

c. Submit environmental data in accordance with Table 1 of ASTM E2129 for products provided under work of this Section.

4. Submit the following according to Conditions of the Construction Contract.

a. Product data. Unless otherwise indicated, submit the following for each type of product provided under work of this Section:

E. Motor Nameplate Information: Manufacturer's name, address, utility and operating data. Bandwidth: submit bandwidth requirements for all Ethernet connections to the Local Network.

F. Submit test results verifying nominal efficiency and power factor for motors 1 horsepower and larger.

G. Submit manufacturer’s installation instructions under provisions of Section 23 05 00. Indicate setting, mechanical connections, lubrication, and wiring instructions.

H. Refer to Division 01 for additional requirements.

1.09 OPERATION AND MAINTENANCE DATA

A. Submit operation and maintenance data under provisions of Section 23 05 00.

B. Include assembly drawings, bearing data including replacement sizes, and lubrication instructions.

1.10 QUALIFICATIONS

A. Manufacturer: Company specializing in manufacture of electric motors for commercial use, and their accessories, with minimum three (3) years’ documented product development, testing, and manufacturing experience.

1.11 REGULATORY REQUIREMENTS

A. Conform to the National Electrical Code.

1.12 DELIVERY, STORAGE AND HANDLING

A. Delivery: Deliver products to site under provisions of Section 23 05 00. Deliver clearly labeled, undamaged materials in the manufacturers' unopened containers.

B. Time and Coordination: Deliver materials to allow for minimum storage time at the project site. Coordinate delivery with the scheduled time of installation.

C. Storage:

1. Store and protect products under provisions of Section 23 05 00.

2. Protect motors stored on site from weather and moisture by maintaining factory covers and suitable weather-proof coverings. For extended outdoor storage, remove motors from equipment and store separately.

1.13 MAINTENANCE

A. Provide twelve (12) months maintenance of all materials and equipment under this Section. Cost of the twelve (12) month normal and preventive maintenance shall be included within this scope of work.

PART 2 - PRODUCTS

2.01 GENERAL

A. All materials shall meet or exceed all applicable referenced standards, federal, state and local requirements, and conform to codes and ordinances of authorities having jurisdiction.

B. Electrical Service: Refer to Drawing schedules for required electrical characteristics.

C. Approved Manufacturers: Provide motors by a single manufacturer as much as possible.

1. Baldor-Reliance.

2. General Electric ES Energy Saver®.

3. Siemens.

4. Marathon® manufactured by Regal-Beloit America, Inc.

5. U.S. Electrical – NEMA Premium Efficiency.

D. Motor Characteristics

1. Duty: Continuous duty at ambient temperature of 40 deg C and at altitude of 3300 feet above sea level.

2. Capacity and Torque Characteristics: Sufficient to start, accelerate, and operate connected loads at designated speeds, at installed altitude and environment, with indicated operating sequence, and without exceeding nameplate ratings or considering service factor.

E. General: Comply with NEMA MG 1 unless otherwise indicated.

F. Temperature Rise: Match insulation rating.

G. Starting Capability: As required for service indicated five (5) starts minimum per hour.

H. Phases and Current: Verify electrical service compatibility with motors to be used.

1. Up to 1/2 hp: Provide permanent split, capacitor-start single phase with inherent overload protection.

2. 3/4 hp and larger: Provide NEMA MG 1, Design B, squirrel-cage induction polyphase.

3. Provide two (2) separate windings on 2-speed polyphase motors.

4. Name plate voltage shall be the same as the circuit's normal voltage, serving the motor.

I. Service Factor: 1.15 for polyphase; 1.35 for single phase.

J. Starting Code Letter Designation:

1. Motors 15 HP and Larger: NEMA starting Code F or Code G.

2. Motors Smaller Than 15 HP: Manufacturer's standard starting characteristic.

K. Frames: U-frames 1.5 hp and larger.

L. Bearings: Provide sealed regreasable, shielded, anti-friction ball bearings; with top mounted Alemite lubrication fittings and bottom side drains minimum average life 100,000 hours typically, and others as follows:

1. Design for radial and thrust loading where applicable.

2. Permanently Sealed: Where not accessible for greasing.

3. Sleeve-Type with Oil Cups: Light duty fractional horsepower motors or polyphase requiring minimum noise level.

M. Enclosure Type: Provide enclosures as follows:

1. Concealed Indoor: Open drip proof (ODP).

2. Exposed Indoor: Guarded.

3. Outdoor Typical: Type II, TEFC.

4. Outdoor Weather Protected: Type II, TEFC.

N. Overload Protection: Built-in sensing device for stopping motor in all phase legs and signaling where indicated for fractional horse power motors.

O. Noise Rating: "Quiet" except where otherwise indicated.

P. Efficiency: Provide premium efficient motors as defined in NEMA MG 1 in accordance with minimum full load efficiency listed in the following table, when tested in accordance with IEEE Test Procedure 112A, Method B, including stray load loss measure.

Q. Thermal Protection:

1. Polyphase Motors: Comply with NEMA MG 1 requirements for thermally protected motors.

2. Single Phase Motors: Internal protection to automatically open power supply circuit to motor when winding temperature exceeds a safe value calibrated to temperature rating of motor insulation. Thermal-protection device shall automatically reset when motor temperature returns to normal range.

R. Additional Requirements for Polyphase Motors

1. Motors Used with Reduced-Voltage and Multispeed Controllers: Match wiring connection requirements for controller with required motor leads. Provide terminals in motor terminal box, suited to control method.

2. Motors Used with Variable-Frequency Controllers:

a. Ratings, characteristics, and features coordinated with and approved by controller manufacturer.

b. Windings: Copper magnet wire with moisture-resistant insulation varnish, designed and tested to resist transient spikes, high frequencies, and short time rise pulses produced by pulse-width-modulated inverters.

c. Premium-Efficient Motors: Class B temperature rise; Class F insulation.

d. Inverter-Duty Motors: Class F temperature rise; Class H insulation.

2.02 MOTOR EFFICIENCIES – NOMINAL, FULL LOAD, THREE PHASE

	Open Drip-Proof (ODP)			Totally Enclosed Fan-Cooled (TEFC)		
Motor HP	1200 rpm	1800 rpm	3600 rpm	1200 rpm	1800 rpm	3600 rpm
1	82.5	85.5	80.0	82.5	85.5	78.5
1.5	86.5	86.5	85.5	87.5	86.5	85.5
2	87.5	86.5	86.5	88.5	86.5	86.5
3	89.5	89.5	86.5	89.5	89.5	88.5
5	89.5	89.5	89.5	89.5	89.5	89.5
7.5	91.7	91.0	89.5	91.7	91.7	91.0
10	91.7	91.7	90.2	91.7	91.7	91.7
15	92.4	93.0	91.0	92.4	92.4	91.7
20	92.4	93.0	92.4	92.4	93.0	92.4
25	93.0	93.6	93.0	93.0	93.6	93.0
30	93.6	94.1	93.0	93.6	93.6	93.0
40	94.1	94.1	93.6	94.1	94.1	93.6

	Open Drip-Proof (ODP)			Totally Enclosed Fan-Cooled (TEFC)		
Motor HP	1200 rpm	1800 rpm	3600 rpm	1200 rpm	1800 rpm	3600 rpm
50	94.1	94.5	93.6	94.1	94.5	94.1
60	95.0	95.0	94.1	94.5	95.0	94.1
75	95.0	95.0	94.5	95.0	95.4	94.5
100	95.0	95.4	94.5	95.4	95.4	94.5
125	95.4	95.4	95.0	95.4	95.4	95.0
150	95.8	95.8	95.4	95.8	95.8	95.4
200	95.4	95.8	95.4	95.8	96.2	95.8

2.03 NEMA OPEN MOTOR SERVICE FACTORS

HP	3600 RPM	1800 RPM	1200 RPM	900 RPM
1/6	1.35	1.35	1.35	1.35
1/2	1.25	1.25	1.25	1.15
3/4	1.25	1.25	1.15	1.15
1	1.25	1.15	1.15	1.15
1.5 - 150	1.15	1.15	1.15	1.15

2.04 MOTOR CONTROLLERS (STARTERS)

A. All motor controllers (for equipment furnished under Division 23) shall be furnished under Division 26 and installed under Division 26 unless otherwise noted on the plans.

B. Motor starters shall be furnished as follows.

1. General: Motor starters shall be Schneider-Electric Class 8536 across-the-line magnetic type, full-voltage, non-reversing (FVNR) starter. All starters shall be constructed and tested in accordance with the latest NEMA standards, sizes and horsepower. IEC sizes are not acceptable. Starters shall be mounted in a general purpose dead front, painted steel enclosure and surface-mounted. Provide size and number of poles as shown and required by equipment served. Provide a two speed, two winding or two speed, single winding motor starter as required for two speed motors.

2. Contacts: Magnetic starters' contacts shall be double break solid silver alloy.

3. All contacts shall be replaceable without removing power wiring or removing starter from panel. The starter shall have straight-through wiring.

4. Operating Coils: Operating coils shall be 120 volts and shall be of molded construction. When the coil fails, the starter shall open and shall not lock in the closed position.

5. Overload Relays: Provide manual reset, trip-free Class 20 overload relays in each phase conductor in of all starters. Overload relays shall be melting alloy type with visual trip indication. All 3 phase and single phase starters shall have one overload relay in each underground conductor. Relay shall not be field adjustable from manual to automatic reset. Provide 6 overload relays for two speed motor starters.

6. Pilot Lights: Provide a red running pilot light for all motor starters. Pilot lights shall be mounted in the starter enclosure cover. Pilot lights shall be operated from an interlock on the motor starter and shall not be wired across the operating coil.

7. Controls: Provide starters with HAND-OFF-AUTOMATIC switches. Coordinate additional motor starter controls with the requirements of Division 23. Motor starter controls shall be mounted in the starter enclosure cover.

8. Control Power Transformer: Provide a single-phase 480 volt control power transformer with each starter for 120 volt control power. Connect the primary side to the line side of the motor starter. The primary side shall be protected by a fuse for each conductor. The secondary side shall have one (1) leg fused and one (1) leg grounded. Arrange transformer terminals so that wiring to terminals will not be located above the transformer.

9. Auxiliary Contacts: Each starter shall have one (1) normally open and one (1) normally closed convertible auxiliary contact in addition to the number of contacts required for the "holding interlock", remote monitoring, and control wiring. In addition, it shall be possible to field-install three more additional auxiliary contacts without removing existing wiring or removing the starter from its enclosure.

10. Unit Wiring: Unit shall be completely pre-wired to terminals to eliminate any interior field wiring except for line and load power wiring and HVAC control wiring.

11. Enclosures: All motor starter enclosures shall be NEMA 1, general purpose enclosures or NEMA 3R if mounted exposed to high moisture conditions. Provide NEMA 4X when located near cooling towers.

12. Power Monitor: Provide a Macromatic PMPU phase failure and under-voltage relay, base and wiring required for starters serving motors 10 horsepower and larger. Set the under-voltage setting according to minimum voltage required for the motor to operate within its range.

C. Approved Manufacturers: Controller numbers are based on first named manufacturer. Provide one of the following manufacturer's.

1. ABB

2. Danfoss

3. Yaskawa

2.05 COMBINATION MOTOR STARTERS

A. General: Combination motor starters shall consist of a magnetic starter and a fusible or non-fusible disconnect switch in a dead front, painted steel NEMA 1 enclosure unless otherwise noted and shall be surface-mounted. Size and number of poles shall as shown and required by equipment served. Combination motor starters shall be as specified for motor starters in Paragraph 2.4.B, except as modified herein.

B. Disconnect Switch: Disconnect switches shall be as specified in Division 26.

C. Approved Manufacturers: Controller numbers are based on first named manufacturer. Provide one of the following manufacturer's.

1. Siemens.

2. Schneider Electric.

3. ABB.

2.06 VARIABLE FREQUENCY DRIVES

A. Manufacturers

1. General:

a. All products provided under this section shall either be Pre-certified or certified prior to bid as described below. If for any reason the product listed is not appropriate to fully meet the project requirements, alternate products shall be certified and bid as described below.

b. Acceptable Manufacturers

1) ABB

2) Danfoss

3) Yaskawa

2. Additional Product Certification: In the event that additional or alternate products from the listed Manufacturer of the Pre-Certified product line listed above are needed to accomplish the requirements of this project, additional products and applications shall be certified following the procedures and requirements of the certification specifications.

a. Any product that is not certified will not be accepted.

b. Upon satisfactory completion of the certification, a registration number will be issued for each product.

c. Include the registration number for each product in the submittal

d. The Owner reserves the right to accept or reject any products at their sole discretion as deemed in their best interest.

B. Where shown on the Drawings, adjustable frequency drives shall have the following features:

1. The VFD shall be rated for 480 VAC (optional input voltages of 208-240 VAC). The VFD shall provide microprocessor-based control for three-phase induction motors. The controller's full load output current rating shall be based on 40°C ambient and 5 kHz switching frequency continuous and utilize dynamic noise control for motors.

2. The VFDs shall be of the Pulse Width Modulated (PWM) design converting the utility input voltage and frequency to a variable voltage and frequency output via a two-step operation. Adjustable Current Source VFDs are not acceptable. Insulated Gate Bipolar Transistors (IGBTs) shall be used in the inverter section. Bipolar Junction Transistors, GTOs or SCRs are not acceptable. The VFDs shall run at the above listed switching frequencies.

3. The VFD's shall have efficiency at full load and speed that exceeds 95% for VFDs below 15 Hp and 97% for drives 15 Hp and above. The efficiency shall exceed 90% at 50% speed and load.

4. The VFDs shall maintain the line side displacement power factor at no less than 0.96, regardless of speed and load.

5. The VFDs shall have a one (1) minute overload current rating of 150% and a two (2) second overload current rating of 250% for constant torque drives. The VFDs shall have a one (1) minute overload current rating of 110% for variable torque drives.

6. The VFDs shall be capable of operating of operating any NEMA design B squirrel cage induction motor, regardless of manufacturer, with a horsepower and current rating within the capacity of the VFD.

7. The VFD's shall have an integral EMI/RFI filter as standard.

8. The VFD's shall limit harmonic distortion reflected onto the utility system to a voltage and current level as defined by IEEE 519-2014 for general systems applications, by utilizing the standard 5% nominal impedance integral AC three-phase line reactor.

9. Any harmonic calculations shall be done based on the kVA capacity, X/R ratio and the impedance of the utility transformer feeding the installation, as noted on the drawings, and the total system load. The calculations shall be made with the point of common coupling being the point where the utility feeds multiple customers.

10. Total harmonic distortion shall be calculated under worst-case conditions in accordance with the procedure outlined in IEEE standard 519-2014. Copies of these calculations are to be made available upon request. The contractor shall provide any needed information to the VFD supplier three (3) weeks prior to requiring harmonic calculations.

11. The system containing the VFDs shall comply with the 5% level of total harmonic distortion of line voltage and the line current limits as defined in IEEE 519-2014. If the system cannot meet the harmonic levels with the with the VFDs provided with the

standard input line reactor or optional input isolation transformer, the VFD manufacturer shall supply either a 12-Pulse or an 18-pulse, multiple bridge rectifier ac to dc conversion section with phase shifting transformer or Matrix topology solution for all drives 50 Hp and above. This 18-pulse rectifier converter shall result in a multiple pulse current waveform that will more nearly approximate a true sine-wave to reduce voltage harmonic content on the utility line. The phase shifting transformer shall be of a single winding type to optimize its KVA rating and harmonic cancellation capability. Harmonic filters are not acceptable for drives 50 Hp and above.

12. The VFD's shall be able to start into a spinning motor. The VFDs shall be able to determine the motor speed in any direction and resume operation without tripping. If the motor is spinning in the reverse direction, the VFDs shall start into the motor in the reverse direction, bring the motor to a controlled stop, and then accelerate the motor to the preset speed.

13. Standard operating conditions shall be:

    a. Incoming Power: Three-phase, 208 - 240 / 380 - 500 / 525 - 690 Vac (+10% to -15%) and 50/60 Hz (+/-5 Hz) power to a fixed potential DC bus level.

    b. Frequency stability of +/-0.05% for 24 hours with voltage regulation of +/-1% of maximum rated output voltage.

    c. Speed regulation of +/- 0.5% of base speed.

    d. Load inertia dependent carryover (ride-through) during utility loss.

    e. Insensitive to input line rotation.

    f. Power loss ride through shall be adjustable through 2 seconds.

    g. Humidity: 0 to 95% (non-condensing and non-corrosive).

    h. Altitude: 0 to 3,300 feet above sea level.

    i. Ambient Temperature: -10 to 50°C (CT), -10 to 40°C (VT).

    j. Storage Temperature: -40 to 60°C.

14. Control Functions

    a. VFD programmable parameters shall be adjustable from a digital operator keypad located on the front of the VFD. The VFDs shall have a 5 line alphanumeric programmable display with status indicators. Keypads must use plain English words for parameters, status, and diagnostic messages. Keypads that are difficult to read or understand are not acceptable, and particularly those that use alphanumeric code and tables. Keypads shall be adjustable for contrast with large characters easily visible in normal ambient light.

b. The keypad shall include a Local/Remote pushbutton selection. Both start/ stop source and speed reference shall be independently programmable for Keypad, Remote I/O, or Field Bus.

c. The keypad shall have copy / paste capability.

d. Upon initial power up of the VFD, the keypad shall display a startup guide that will sequence all the necessary parameter adjustments for general start up.

e. Standard advanced programming and trouble-shooting functions shall be available by using a personal computer's RS-232 port and Windows™ based software. In addition, the software shall permit control and monitoring via the VFD's RS232 port. The manufacturer shall supply free website download for the required software. An easily understood instruction manual and software help screens shall also be provided. The computer software shall be used for modifying the drive setup and reviewing diagnostic and trend information as outlined in this Section.

f. The operator shall be able to scroll through the keypad menu to choose between the following:

1) Monitor

2) Operate

3) Parameter setup

4) Display parameter values

5) Display current faults

6) Fault history

7) Keypad LCD contrast adjustment

8) Information to indicate the standard software and optional features software loaded.

g. The following setups and adjustments, at a minimum, are to be available:

1) Start command from keypad, remote or communications port

2) Speed command from keypad, remote or communications port

3) Motor direction selection

4) Maximum and minimum speed limits

5) Acceleration and deceleration times, two settable ranges

6) Critical (skip) frequency avoidance

7) Torque limit

8) Multiple attempt restart function

9) Multiple preset speeds adjustment

10) Parameter for speed search to catch a spinning motor start or normal start selection

11) Programmable analog output

12) DC brake current magnitude and time

13) PI process controller

15. The VFDs shall have the following system interfaces:

a. Inputs – A minimum of six (6) programmable digital inputs, two (2) analog inputs and shall be provided with the following available as a minimum:

1) Remote manual/auto

2) Remote start/stop

3) Remote forward/reverse

4) Remote preset speeds

5) Remote external trip

6) Remote fault reset

7) Process control speed reference interface, 4-20 mA dc

8) Potentiometer and 1-10 Vdc speed reference interface

9) RS232 programming and operation interface port

b. Provide a communications interface with all points and functions listed in this section connected to the BMS provided. A minimum of two (2) discrete programmable digital outputs, one (1) programmable open collector output, and one (1) programmable analog output shall be provided, with the following available at minimum.

1) Programmable relay outputs with one (1) set of Form C contacts for each, selectable with the following available at minimum:

a) Fault

b) Run

c) Ready

d) Reversed

e) Jogging

f) At speed

g) Torque Limit Supervision

h) Motor rotation direction opposite of commanded

i) Over temperature

2) Programmable open collector output with available 24Vdc power supply and selectable with the following available at minimum:

a) Fault

b) Run

c) Ready

d) Reversed

e) Jogging

f) At speed

g) Torque Limit Supervision

h) Motor rotation direction opposite of commanded

i) Over temperature

3) Programmable analog output signal, selectable with the following available at minimum:

a) Motor current

b) Output frequency

c) Frequency reference

d) Motor speed

e) Motor torque

f) Motor power

g) Motor voltage

h) DC-bus voltage

16. Monitoring and Displays

a. The VFD’s display shall be a LCD type capable of displaying three (3) lines of text and the following thirteen (13) status indicators:

1) Run

2) Forward

3) Reverse

4) Stop

5) Ready

6) Alarm

7) Fault

8) I/O terminal

9) Keypad

10) Bus/Comm

11) Local / Remote (LED)

12) Fault)

b. The VFD’s keypad shall be capable of displaying the following monitoring functions at a minimum:

1) Output frequency

2) Frequency reference

3) Motor speed

4) Motor current

5) Motor torque

6) Motor power

7) Motor voltage

8) DC-bus voltage

9) Unit temperature

10) Voltage level of analog input

11) Current level of analog input

12) Digital inputs status

13) Digital and relay outputs status

14) Analog out

17. Protective Functions

a. The VFD shall include the following protective features at minimum:

1) Over current

2) Overvoltage

3) Inverter fault

4) Under voltage

5) Input phase loss

6) Output phase loss

7) Under temperature

8) Over temperature

9) Motor stalled

10) Motor under load

11) Logic voltage failure

12) Microprocessor failure

b. The VFD shall provide ground fault protection during power-up, starting, and running. VFD's with no ground fault protection during running are not acceptable.

18. Diagnostic Features

a. Ten (10) faults History

b. Record and log faults

19. Indicate the most recent first, and store up to ten (10) faults.

20. Additional features that must be included in the VFD:

a. Thermal or magnetic only circuit breaker to provide a disconnect means. Operating handle shall protrude the door. The disconnect shall not be mounted on the door. The handle position shall indicate ON, OFF, and TRIPPED condition. The handle shall have provisions for padlocking in the OFF position with at least three (3) padlocks. Interlocks shall prevent unauthorized opening or closing of the VFD door with the disconnect handle in the ON position. This shall be defeat able by maintenance personnel.

b. Three (3) contactor bypass shall include a drive input disconnect, an VFD input isolation contactor, bypass contactor and an VFD output contactor that is electrically and mechanically interlocked with the bypass contactor. This circuit shall include control logic, status lights and motor over current relays. The complete bypass system (Inverter-Off-Bypass) (Hand-Off-Auto with Inverter-Bypass) selector switch(s), and inverter/bypass pilot lights shall be packaged with the VFD. The unit may be set up for (Manual or Automatic) bypass operation upon an VFD trip.

c. Fused space heaters with thermostat for oversize enclosures to minimize condensation potential upon drive shutdown.

d. Motor over-current relay to provide motor over current sensing of a given level of load current.

e. Motor filter for use on motor cable runs exceeding 100 feet for motors with a peak voltage insulation rating less than 1600 Vac. Motors without NEMA MG1, Part 31 construction shall be identified to bidders.

1) The dV/dt filter shall be located at the VFD and shall reduce the dV/dt clamp any voltage overshoots of the VFD output. It will return the energy in the voltage overshoots to the VFD’s dc bus. A power dissipative resistance device is not acceptable. Filter shall be a Eaton MotoR$_x$™ series.

21. The VFD manufacturer shall maintain, as part of a national network, engineering service facilities within 250 miles of project to provide start-up service, emergency service calls, repair work, service contracts, maintenance and training of customer personnel.

PART 3 - EXECUTION

3.01 FACTORY TESTING

A. The following standard factory tests shall be performed on the equipment provided under this section. All tests shall be in accordance with the latest version of UL and NEMA standards.

1. All printed circuit boards shall be functionally tested via automatic test equipment prior to unit installation.

2. After all tests have been performed, each VFD shall undergo a burn-in test. The drive shall be burned in at 100% inductive or motor load without an unscheduled shutdown.

3. After the burn-in cycle is complete, each VFD shall be put through a motor load test before inspection and shipping.

B. The manufacturer shall provide three (3) certified copies of factory test reports.

3.02 FIELD QUALITY CONTROL

A. Provide the services of a qualified manufacturer's employed Field Service Engineer to assist the Contractor in installation and start-up of the equipment specified under this section. Field Service personnel shall be factory trained with periodic updates and have experience with the same model of VFD’s on the job site. Sales representatives will not be acceptable to perform this work. The manufacturer's service representative shall provide technical direction and assistance to the Contractor in general assembly of the equipment, installation as specified in manufacturer’s installation instructions, wiring, application dependent adjustments, communications setup and verification of proper VFD operation.

B. The following minimum work shall be performed by the Contractor under the technical direction of the manufacturer's service representative.

1. Inspection and final adjustments.

2. Operational and functional checks of VFDs and spare parts.

3. Provide cable and connector to the IP drop supplied by Controls Contractor.

4. Verify that the unit is properly configured for remote communication to the system.

5. The Contractor shall certify that he has read the drive manufacturer’s installation instructions and has installed the VFD in accordance with those instructions.

C. The Contractor shall provide three (3) copies of the manufacturer's field start-up report before final payment is made.

3.03 MAINTNANCE / WARRANTY SERVICE

A. Warranty to commence twelve (12) months from the date of start-up, not to exceed 36 months from the date of shipment, and include all parts, labor, and travel time.

3.04 FIELD TESTING

A. The VFD manufacturer shall perform harmonic measurements at the point where the utility feeds multiple customers (PCC) to verify compliance with IEEE 519-2014. A report of the voltage THD and current TDD shall be sent to the engineer. The Contractor shall provide labor, material, and protection as needed to access the test points. The readings shall be taken with all drives and all other loads at full load, or as close as field conditions allow.

3.05 TRAINING

A. The Contractor shall provide a training session for up to two (2) Owner's representatives for one (1) workday with a maximum of two (2) trips at a job site location determined by the Owner. Training and instruction time shall be in addition to that required for start-up service.

B. The training shall be conducted by the manufacturer's qualified representative.

C. The training program shall consist of the following:

1. Instructions on the proper operation of the equipment.

2. Instructions on the proper maintenance of the equipment.

END OF SECTION 230513

23 05 17

SLEEVES AND SLEEVE SEALS FOR HVAC PIPING

PART 1 - GENERAL

1.01 RELATED DOCUMENTS

A. Drawings and general provisions of the Contract, including General and Supplementary Conditions and Division 01 Specification Sections, apply to this Section.

1.02 SUMMARY

A. Section Includes:

1. Sleeves.
2. Stack-sleeve fittings.
3. Sleeve-seal systems.
4. Sleeve-seal fittings.
5. Grout.
6. Silicone sealants.

B. Related Requirements:

1. Section 078413 "Penetration Firestopping" for penetration firestopping installed in fire-resistance-rated walls, horizontal assemblies, and smoke barriers, with and without penetrating items.

1.03 ACTION SUBMITTALS

A. Product Data: For each type of product.

1.04 INFORMATIONAL SUBMITTALS

A. Field quality-control reports.

PART 2 - PRODUCTS

2.01 SLEEVES

A. Manufacturers: Subject to compliance with requirements, provide products by one of the following:

1. Advance Products & Systems, Inc.

2. CALPICO, Inc.

3. GPT; an EnPro Industries company.

B. Cast-Iron Pipe Sleeves: Cast or fabricated of cast or ductile iron and equivalent to ductile-iron pressure pipe, with plain ends and integral waterstop collar.

C. Steel Pipe Sleeves: ASTM A53/A53M, Type E, Grade B, Schedule 40, anti-corrosion coated, with plain ends and integral welded waterstop collar.

D. Galvanized-Steel Sheet Sleeves: 0.0239-inch minimum thickness; round tube closed with welded longitudinal joint.

E. PVC Pipe Sleeves: ASTM D1785, Schedule 40.

F. Molded-PVC Sleeves: With nailing flange for attaching to wooden forms.

G. Molded-PE or -PP Sleeves: Removable, tapered-cup shaped, and smooth outer surface with nailing flange for attaching to wooden forms.

2.02 STACK-SLEEVE FITTINGS

A. Manufacturers: Subject to compliance with requirements, provide products by one of the following:

1. Jay R. Smith Mfg Co; a division of Morris Group International.
2. Zurn Industries, LLC.
3. Underdeck Clamp: Clamping ring with setscrews.

2.03 SLEEVE-SEAL SYSTEMS

A. Manufacturers: Subject to compliance with requirements, provide products by one of the following:

1. Advance Products & Systems, Inc.
2. Airex Manufacturing.
3. CALPICO, Inc.
4. GPT; an EnPro Industries company.
5. Metraflex Company (The).
6. Proco Products, Inc.

B. Description:

1. Modular sealing-element unit, designed for field assembly, for filling annular space between piping and sleeve.
2. Designed to form a hydrostatic seal of 20-psig.

3. Sealing Elements: EPDM-rubber interlocking links shaped to fit surface of pipe. Include type and number required for pipe material and size.

4. Connecting Bolts and Nuts: Carbon steel, with corrosion-resistant coating, ASTM B633 of length required to secure pressure plates to sealing elements.

2.04 SLEEVE-SEAL FITTINGS

A. Manufacturers: Subject to compliance with requirements, provide products by one of the following:

1. Advance Products & Systems, Inc.

2. CALPICO, Inc.

3. GPT; an EnPro Industries company.

4. Metraflex Company (The).

5. Proco Products, Inc.

B. Description:

1. Manufactured plastic, sleeve-type, waterstop assembly, made for imbedding in concrete slab or wall.

2. Plastic or rubber waterstop collar with center opening to match piping OD.

2.05 GROUT

A. Description: Nonshrink, recommended for interior and exterior sealing openings in nonfire-rated walls or floors.

B. Standard: ASTM C1107/C1107M, Grade B, post-hardening and volume-adjusting, dry, hydraulic-cement grout.

C. Design Mix: 5000-psi, 28-day compressive strength.

D. Packaging: Premixed and factory packaged.

2.06 SILICONE SEALANTS

A. Silicone, S, NS, 25, NT: Single-component, nonsag, plus 25 percent and minus 25 percent movement capability, nontraffic-use, neutral-curing silicone joint sealant, ASTM C920, Type S, Grade NS, Class 25, use NT.

1. Manufacturers: Subject to compliance with requirements, provide products by one of the following:

a. GE Construction Sealants; Momentive Performance Materials Inc.

b. Pecora Corporation.

c. Permathane®/Acryl-R®; ITW Polymers Sealants North America.

d. Polymeric Systems, Inc.

e. Sherwin-Williams Company (The).

f. The Dow Chemical Company.

B. Silicone, S, P, 25, T, NT: Single-component, pourable, plus 25 percent and minus 25 percent movement capability, traffic- and nontraffic-use, neutral-curing silicone joint sealant; ASTM C920, Type S, Grade P, Class 25, Uses T and NT. Grade P Pourable (self-leveling) formulation is for opening in floors and other horizontal surfaces that are not fire rated.

1. Manufacturers: Subject to compliance with requirements, provide products by the following:

a. May National Associates, Inc.; a subsidiary of Sika Corporation.

C. Silicone Foam: Multicomponent, silicone-based liquid elastomers that, when mixed, expand and cure in place to produce a flexible, nonshrinking foam.

1. Manufacturers: Subject to compliance with requirements, provide products by the following:

a. Smooth-On.

PART 3 - EXECUTION

3.01 SLEEVE INSTALLATION

A. Install sleeves for piping passing through penetrations in floors, partitions, roofs, and walls.

B. For sleeves that will have sleeve-seal system installed, select sleeves of size large enough to provide 1-inch annular clear space between piping and concrete slabs and walls.

C. Install sleeves in concrete floors, concrete roof slabs, and concrete walls as new slabs and walls are constructed.
1. Permanent sleeves are not required for holes in slabs formed by molded-PE or -PP sleeves.
2. Cut sleeves to length for mounting flush with both surfaces.
   a. Exception: Extend sleeves installed in floors of mechanical equipment areas or other wet areas 2 inches above finished floor level.
3. Using grout or silicone sealant, seal space outside of sleeves in slabs and walls without sleeve-seal system.

D. Install sleeves for pipes passing through interior partitions.

1. Cut sleeves to length for mounting flush with both surfaces.

2. Install sleeves that are large enough to provide 1/4-inch annular clear space between sleeve and pipe or pipe insulation.

3. Seal annular space between sleeve and piping or piping insulation; use sealants appropriate for size, depth, and location of joint.

E. Fire-Resistance-Rated Penetrations, Horizontal Assembly Penetrations, and Smoke-Barrier Penetrations: Maintain indicated fire or smoke rating of walls, partitions, ceilings, and floors at pipe penetrations. Seal pipe penetrations with fire- and smoke-stop materials. Comply with requirements for firestopping and fill materials specified in Section 078413 "Penetration Firestopping."

3.02 STACK-SLEEVE-FITTING INSTALLATION

A. Install stack-sleeve fittings in new slabs as slabs are constructed.

1. Install fittings that are large enough to provide 1/4-inch annular clear space between sleeve and pipe or pipe insulation.

2. Secure flashing between clamping flanges for pipes penetrating floors with membrane waterproofing. Comply with requirements for flashing specified in Section 076200 "Sheet Metal Flashing and Trim."

3. Install section of cast-iron soil pipe to extend sleeve to 3 inches above finished floor level.

4. Extend cast-iron sleeve fittings below floor slab as required to secure clamping ring if ring is specified.

5. Using waterproof silicone sealant, seal space between top hub of stack-sleeve fitting and pipe.

B. Fire-Resistance-Rated, Horizontal Assembly, and Smoke Barrier Penetrations: Maintain indicated fire or smoke rating of floors at pipe penetrations. Seal pipe penetrations with fire- and smoke-stop materials. Comply with requirements for firestopping specified in Section 078413 "Penetration Firestopping."

3.03 SLEEVE-SEAL-SYSTEM INSTALLATION

A. Install sleeve-seal systems in sleeves in exterior concrete walls and slabs-on-grade at service piping entries into building.

B. Select type, size, and number of sealing elements required for piping material and size and for sleeve ID or hole size. Position piping in center of sleeve. Center piping in penetration, assemble sleeve-seal-system components, and install in annular space between piping and sleeve. Tighten bolts against pressure plates that cause sealing elements to expand and make a watertight seal.

3.04 SLEEVE-SEAL-FITTING INSTALLATION

A. Install sleeve-seal fittings as new walls and slabs are constructed.

B. Assemble fitting components of length to be flush with both surfaces of concrete slabs and walls. Position waterstop flange to be centered in concrete slab or wall.

C. Secure nailing flanges to concrete forms.

D. Using grout or silicone sealant, seal space around outside of sleeve-seal fittings.

3.05 FIELD QUALITY CONTROL

A. Perform the following tests and inspections:

1. Leak Test: After allowing for a full cure, test sleeves and sleeve seals for leaks. Repair leaks and retest until no leaks exist.

B. Sleeves and sleeve seals will be considered defective if they do not pass tests and inspections.

3.06 SLEEVE AND SLEEVE-SEAL SCHEDULE

A. Use sleeves and sleeve seals for the following piping-penetration applications:

1. Exterior Concrete Walls Above Grade:

a. Piping Smaller Than NPS 6: Steel pipe sleeves.

b. Piping NPS 6 and Larger: Steel pipe sleeves.

2. Exterior Concrete Walls Below Grade:

a. Piping Smaller Than NPS 6: Steel pipe sleeves with sleeve-seal system.

1) Select sleeve size to allow for 1-inch annular clear space between piping and sleeve for installing sleeve-seal system.

b. Piping NPS 6 and Larger: Steel pipe sleeves with sleeve-seal system.

1) Select sleeve size to allow for 1-inch Insert dimension annular clear space between piping and sleeve for installing sleeve-seal system.

3. Concrete Slabs-on-Grade:

a. Piping Smaller Than NPS 6: Steel pipe sleeves with sleeve-seal system.

1) Select sleeve size to allow for 1-inch annular clear space between piping and sleeve for installing sleeve-seal system.

b. Piping NPS 6 and Larger: Steel pipe sleeves with sleeve-seal system.

1) Select sleeve size to allow for 1-inch annular clear space between piping and sleeve for installing sleeve-seal system.

4. Concrete Slabs Above Grade:

   a. Piping Smaller Than NPS 6: Steel pipe sleeves.

   b. Piping NPS 6 Insert pipe size and Larger: Steel pipe sleeves.

5. Interior Partitions:

   a. Piping Smaller Than NPS 6: Steel pipe sleeves.

   b. Piping NPS 6 and Larger: Galvanized-steel sheet sleeves.

END OF SECTION

23 05 19

METERS AND GAGES FOR HVAC PIPING

PART 1 - GENERAL

1.01 RELATED DOCUMENTS

A. Drawings and general provisions of the Contract, including General and Supplementary Conditions and Division 01 Specification Sections, apply to this Section.

1.02 SUMMARY

A. Section Includes:

1. Bimetallic-actuated thermometers.
2. Filled-system thermometers.
3. Liquid-in-glass thermometers.
4. Light-activated thermometers.
5. Duct-thermometer mounting brackets.
6. Thermowells.
7. Dial-type pressure gages.
8. Gage attachments.
9. Test plugs.
10. Test-plug kits.
11. Sight flow indicators.
12. Flowmeters.
13. Thermal-energy meters.

1.03 ACTION SUBMITTALS

A. Product Data: For each type of product.

B. Shop Drawings:

1. Include diagrams for power, signal, and control wiring.

1.04 INFORMATIONAL SUBMITTALS

A. Product Certificates: For each type of meter and gage.

1.05 CLOSEOUT SUBMITTALS

A. Operation and Maintenance Data: For meters and gages to include in operation and maintenance manuals.

PART 2 - PRODUCTS

2.01 BIMETALLIC-ACTUATED THERMOMETERS

A. Manufacturers: Subject to compliance with requirements, provide products by one of the following:

1. Ashcroft Inc.
2. Blue Ribbon Corp.
3. Ernst Flow Industries.
4. Marsh Bellofram.
5. Miljoco Corporation.
6. Nanmac Corporation.
7. Noshok.
8. Palmer Wahl Instrumentation Group.
9. REOTEMP Instrument Corporation.
10. Tel-Tru Manufacturing Company.
11. Trerice, H. O. Co.
12. WATTS.
13. Weiss Instruments, Inc.
14. Weksler Glass Thermometer Corp.
15. WIKA Instrument Corporation.
16. Winters Instruments - U.S.

B. Standard: ASME B40.200.

C. Case: sealed type(s); stainless steel with 3-inch nominal diameter.

D. Dial: Nonreflective aluminum with permanently etched scale markings and scales in deg F.

E. Connector Type(s): Union joint, adjustable angle, with unified-inch screw threads.

F. Connector Size: 1/2 inch, with ASME B1.1 screw threads.

G. Stem: 0.25 or 0.375 inch in diameter; stainless steel.

H. Window: Plain glass.

I. Ring: Stainless steel.

J. Element: Bimetal coil.

K. Pointer: Dark-colored metal.

L. Accuracy: Plus or minus 1 percent of scale range.

2.02 FILLED-SYSTEM THERMOMETERS

A. Direct-Mounted, Metal-Case, Vapor-Actuated Thermometers:

1. Manufacturers: Subject to compliance with requirements, provide products by one of the following:

a. Ashcroft Inc.

b. Marsh Bellofram.

c. Miljoco Corporation.

d. Palmer Wahl Instrumentation Group.

e. REOTEMP Instrument Corporation.

f. Trerice, H. O. Co.

g. Weiss Instruments, Inc.

2. Standard: ASME B40.200.

3. Case: Sealed type, cast aluminum or drawn steel; 4-1/2-inch nominal diameter.

4. Element: Bourdon tube or other type of pressure element.

5. Movement: Mechanical, dampening type, with link to pressure element and connection to pointer.

6. Dial: Nonreflective aluminum with permanently etched scale markings graduated in deg F.

7. Pointer: Dark-colored metal.

8. Window: Glass or.

9. Ring: Stainless steel.

10. Connector Type(s): Union joint, adjustable, 180 degrees in vertical plane, 360 degrees in horizontal plane, with locking device; with ASME B1.1 screw threads.

11. Thermal System: Liquid-filled bulb in copper-plated steel, aluminum, or brass stem and of length to suit installation.

    a. Design for Air-Duct Installation: With ventilated shroud.

    b. Design for Thermowell Installation: Bare stem.

12. Accuracy: Plus or minus 1 percent of scale range.

B. Direct-Mounted, Plastic-Case, Vapor-Actuated Thermometers:

1. Manufacturers: Subject to compliance with requirements, provide products by one of the following:

    a. Ashcroft Inc.

    b. Miljoco Corporation.

    c. REOTEMP Instrument Corporation.

2. Standard: ASME B40.200.

3. Case: Sealed type, plastic; 4-1/2-inch nominal diameter.

4. Element: Bourdon tube or other type of pressure element.

5. Movement: Mechanical, with link to pressure element and connection to pointer.

6. Dial: Nonreflective aluminum with permanently etched scale markings graduated in deg F.

7. Pointer: Dark-colored metal.

8. Window: Glass.

9. Ring: Metal.

10. Connector Type(s): Union joint, adjustable, 180 degrees in vertical plane, 360 degrees in horizontal plane, with locking device; with ASME B1.1 screw threads.

11. Thermal System: Liquid-filled bulb in copper-plated steel, aluminum, or brass stem and of length to suit installation.

    a. Design for Air-Duct Installation: With ventilated shroud.

b. Design for Thermowell Installation: Bare stem.

12. Accuracy: Plus or minus 1 percent of scale range.

C. Remote-Mounted, Metal-Case, Vapor-Actuated Thermometers:

1. Manufacturers: Subject to compliance with requirements, provide products by one of the following:

a. Ametek U.S. Gauge.

b. Ashcroft Inc.

c. Blue Ribbon Corp.

d. Marsh Bellofram.

e. Miljoco Corporation.

f. Palmer Wahl Instrumentation Group.

g. REOTEMP Instrument Corporation.

h. Trerice, H. O. Co.

i. Weiss Instruments, Inc.

j. WIKA Instrument Corporation.

2. Standard: ASME B40.200.

3. Case: Sealed type, cast aluminum or drawn steel; 4-1/2-inch nominal diameter with flange and holes for panel mounting.

4. Element: Bourdon tube or other type of pressure element.

5. Movement: Mechanical, with link to pressure element and connection to pointer.

6. Dial: Nonreflective aluminum with permanently etched scale markings graduated in deg F.

7. Pointer: Dark-colored metal.

8. Window: Glass.

9. Ring: Metal.

10. Connector Type(s): Union joint, bottom; with ASME B1.1 screw threads.

11. Thermal System: Liquid-filled bulb in copper-plated steel, aluminum, or brass stem and of length to suit installation.

a. Design for Air-Duct Installation: With ventilated shroud.

b. Design for Thermowell Installation: Bare stem.

12. Accuracy: Plus or minus 1 percent of scale range.

D. Remote-Mounted, Plastic-Case, Vapor-Actuated Thermometers:

1. Manufacturers: Subject to compliance with requirements, provide products by one of the following:

a. Ametek U.S. Gauge.

b. Ashcroft Inc.

c. Miljoco Corporation.

d. REOTEMP Instrument Corporation.

e. Trerice, H. O. Co.

2. Standard: ASME B40.200.

3. Case: Sealed type, plastic; 4-1/2-inch nominal diameter with back flange and holes for panel mounting.

4. Element: Bourdon tube or other type of pressure element.

5. Movement: Mechanical, with link to pressure element and connection to pointer.

6. Dial: Nonreflective aluminum with permanently etched scale markings graduated in deg F.

7. Pointer: Dark-colored metal.

8. Window: Glass.

9. Ring: Metal.

10. Connector Type(s): Union joint, threaded, back; with ASME B1.1 screw threads.

11. Thermal System: Liquid-filled bulb in copper-plated steel, aluminum, or brass stem and of length to suit installation.

a. Design for Air-Duct Installation: With ventilated shroud.

b. Design for Thermowell Installation: Bare stem.

12. Accuracy: Plus or minus 1 percent of scale range or one scale division, to a maximum of 1.5 percent of scale range.

2.03 LIQUID-IN-GLASS THERMOMETERS

A. Metal-Case, Compact-Style, Liquid-in-Glass Thermometers:

1. Manufacturers: Subject to compliance with requirements, provide products by the following:

   a. Trerice, H. O. Co.

2. Standard: ASME B40.200.

3. Case: Cast aluminum; 6-inch nominal size.

4. Case Form: Straight unless otherwise indicated.

5. Tube: Glass with magnifying lens and blue or red organic liquid.

6. Tube Background: Nonreflective aluminum with permanently etched scale markings graduated in deg F.

7. Window: Glass or plastic.

8. Stem: Aluminum or brass and of length to suit installation.

   a. Design for Air-Duct Installation: With ventilated shroud.

   b. Design for Thermowell Installation: Bare stem.

9. Connector: 3/4 inch, with ASME B1.1 screw threads.

10. Accuracy: Plus or minus 1 percent of scale range or one scale division, to a maximum of 1.5 percent of scale range.

B. Plastic-Case, Compact-Style, Liquid-in-Glass Thermometers:

1. Manufacturers: Subject to compliance with requirements, provide products by one of the following:

   a. Flo Fab Inc.

   b. Miljoco Corporation.

   c. Tel-Tru Manufacturing Company.

   d. WATTS.

   e. Weiss Instruments, Inc.

   f. Weksler Glass Thermometer Corp.

   g. WIKA Instrument Corporation.

2. Standard: ASME B40.200.

3. Case: Plastic; 6-inch nominal size.

4. Case Form: Back angle unless otherwise indicated.

5. Tube: Glass with magnifying lens and blue or red organic liquid.

6. Tube Background: Nonreflective with permanently etched scale markings graduated in deg F.

7. Window: Glass or plastic.

8. Stem: Aluminum or brass and of length to suit installation.

   a. Design for Air-Duct Installation: With ventilated shroud.

   b. Design for Thermowell Installation: Bare stem.

9. Connector: 3/4 inch, with ASME B1.1 screw threads.

10. Accuracy: Plus or minus 1 percent of scale range or one scale division, to a maximum of 1.5 percent of scale range.

C. Metal-Case, Industrial-Style, Liquid-in-Glass Thermometers:

1. Manufacturers: Subject to compliance with requirements, provide products by one of the following:

   a. Blue Ribbon Corp.

   b. Flo Fab Inc.

   c. Miljoco Corporation.

   d. Palmer Wahl Instrumentation Group.

   e. Tel-Tru Manufacturing Company.

   f. Trerice, H. O. Co.

   g. Weiss Instruments, Inc.

   h. Weksler Glass Thermometer Corp.

   i. Winters Instruments - U.S.

2. Standard: ASME B40.200.

3. Case: Cast aluminum; 7-inch nominal size unless otherwise indicated.

4. Case Form: Adjustable angle unless otherwise indicated.

5. Tube: Glass with magnifying lens and blue or red organic liquid.

6. Tube Background: Nonreflective aluminum with permanently etched scale markings graduated in deg F.

7. Window: Glass.

8. Stem: Aluminum and of length to suit installation.

   a. Design for Air-Duct Installation: With ventilated shroud.

   b. Design for Thermowell Installation: Bare stem.

9. Connector: 1-1/4 inches, with ASME B1.1 screw threads.

10. Accuracy: Plus or minus 1 percent of scale range or one scale division, to a maximum of 1.5 percent of scale range.

D. Plastic-Case, Industrial-Style, Liquid-in-Glass Thermometers:

1. Manufacturers: Subject to compliance with requirements, provide products by one of the following:

   a. Ernst Flow Industries.

   b. Marsh Bellofram.

   c. Miljoco Corporation.

   d. Palmer Wahl Instrumentation Group.

   e. REOTEMP Instrument Corporation.

   f. WATTS.

   g. Weiss Instruments, Inc.

   h. Weksler Glass Thermometer Corp.

   i. WIKA Instrument Corporation.

2. Standard: ASME B40.200.

3. Case: Plastic; 7-inch nominal size unless otherwise indicated.

4. Case Form: Adjustable angle unless otherwise indicated.

5. Tube: Glass with magnifying lens and blue or red organic liquid.

6. Tube Background: Nonreflective aluminum with permanently etched scale markings graduated in deg F.

7. Window: Glass.

8. Stem: Stainless steel Aluminum, brass, or stainless steel Insert material and of length to suit installation.

    a. Design for Air-Duct Installation: With ventilated shroud.

    b. Design for Thermowell Installation: Bare stem.

9. Connector: 1-1/4 inches, with ASME B1.1 screw threads.

10. Accuracy: Plus or minus 1 percent of scale range or one scale division, to a maximum of 1.5 percent of scale range.

2.04 LIGHT-ACTIVATED THERMOMETERS

A. Direct-Mounted, Light-Activated Thermometers:

1. Manufacturers: Subject to compliance with requirements, provide products by one of the following:

    a. Flo Fab Inc.

    b. REOTEMP Instrument Corporation.

    c. Trerice, H. O. Co.

    d. Weiss Instruments, Inc.

    e. Weksler Glass Thermometer Corp.

    f. WIKA Instrument Corporation.

    g. Winters Instruments - U.S.

2. Case: Plastic; 7-inch nominal size unless otherwise indicated.

3. Scale(s): Deg F.

4. Case Form: Adjustable angle.

5. Connector: 1-1/4 inches, with ASME B1.1 screw threads.

6. Stem: Aluminum and of length to suit installation.

    a. Design for Air-Duct Installation: With ventilated shroud.

    b. Design for Thermowell Installation: Bare stem.

7. Display: Digital.

8. Accuracy: Plus or minus 2 deg F.

B. Remote-Mounted, Light-Activated Thermometers:

1. Manufacturers: Subject to compliance with requirements, provide products by one of the following:

   a. Miljoco Corporation.

   b. Weiss Instruments, Inc.

   c. Winters Instruments - U.S.

2. Case: Plastic, for wall mounting.

3. Scale(s): Deg F.

4. Sensor: Bulb and thermister wire.

   a. Design for Air-Duct Installation: With ventilated shroud.

   b. Design for Thermowell Installation: Bare stem.

5. Display: Digital.

6. Accuracy: Plus or minus 2 deg F.

2.05 DUCT-THERMOMETER MOUNTING BRACKETS

A. Description: Flanged bracket with screw holes, for attachment to air duct and made to hold thermometer stem.

2.06 THERMOWELLS

A. Thermowells:

1. Standard: ASME B40.200.

2. Description: Pressure-tight, socket-type fitting made for insertion in piping tee fitting.

3. Material for Use with Copper Tubing: CNR or CUNI.

4. Material for Use with Steel Piping: CRES.

5. Type: Stepped shank unless straight or tapered shank is indicated.

6. External Threads: NPS 1/2, NPS 3/4, or NPS 1, ASME B1.20.1 pipe threads.

7. Internal Threads: 1/2, 3/4, and 1 inch, with ASME B1.1 screw threads.

8. Bore: Diameter required to match thermometer bulb or stem.

9. Insertion Length: Length required to match thermometer bulb or stem.

10. Lagging Extension: Include on thermowells for insulated piping and tubing.

11. Bushings: For converting size of thermowell's internal screw thread to size of thermometer connection.

B. Heat-Transfer Medium: Mixture of graphite and glycerin.

2.07 DIAL-TYPE PRESSURE GAGES

A. Direct-Mounted, Metal-Case, Dial-Type Pressure Gages:

1. Manufacturers: Subject to compliance with requirements, provide products by one of the following:

a. Ametek U.S. Gauge.

b. Ashcroft Inc.

c. Blue Ribbon Corp.

d. Ernst Flow Industries.

e. Flo Fab Inc.

f. Marsh Bellofram.

g. Miljoco Corporation.

h. Noshok.

i. Palmer Wahl Instrumentation Group.

j. REOTEMP Instrument Corporation.

k. Tel-Tru Manufacturing Company.

l. Trerice, H. O. Co.

m. WATTS.

n. Weiss Instruments, Inc.

o. Weksler Glass Thermometer Corp.

p. WIKA Instrument Corporation.

q. Winters Instruments - U.S.

2. Standard: ASME B40.100.

3. Case: Sealed type(s); cast aluminum or drawn steel; 4-1/2-inch nominal diameter.

4. Pressure-Element Assembly: Bourdon tube unless otherwise indicated.

5. Pressure Connection: Brass, with NPS 1/4 or NPS 1/2, ASME B1.20.1 pipe threads and bottom-outlet type unless back-outlet type is indicated.

6. Movement: Mechanical, with link to pressure element and connection to pointer.

7. Dial: Nonreflective aluminum with permanently etched scale markings graduated in psi and kPa.

8. Pointer: Dark-colored metal.

9. Window: Glass.

10. Ring: Brass.

11. Accuracy: Grade A, plus or minus 1 percent of middle half of scale range.

B. Direct-Mounted, Plastic-Case, Dial-Type Pressure Gages:

1. Manufacturers: Subject to compliance with requirements, provide products by one of the following:

   a. Ametek U.S. Gauge.

   b. Ashcroft Inc.

   c. Flo Fab Inc.

   d. Marsh Bellofram.

   e. Miljoco Corporation.

   f. Noshok.

   g. Palmer Wahl Instrumentation Group.

   h. REOTEMP Instrument Corporation.

   i. Tel-Tru Manufacturing Company.

   j. Trerice, H. O. Co.

   k. Weiss Instruments, Inc.

   l. Weksler Glass Thermometer Corp.

   m. WIKA Instrument Corporation.

   n. Winters Instruments - U.S.

2. Standard: ASME B40.100.

3. Case: Sealed type; plastic; 4-1/2-inch nominal diameter.

4. Pressure-Element Assembly: Bourdon tube unless otherwise indicated.

5. Pressure Connection: Brass, with NPS 1/4 or NPS 1/2, ASME B1.20.1 pipe threads and bottom-outlet type unless back-outlet type is indicated.

6. Movement: Mechanical, with link to pressure element and connection to pointer.

7. Dial: Nonreflective aluminum with permanently etched scale markings graduated in psi and kPa.

8. Pointer: Dark-colored metal.

9. Window: Glass.

10. Accuracy: Grade A, plus or minus 1 percent of middle half of scale range.

C. Remote-Mounted, Metal-Case, Dial-Type Pressure Gages:

1. Manufacturers: Subject to compliance with requirements, provide products by one of the following:

a. Ametek U.S. Gauge.

b. Ashcroft Inc.

c. Ernst Flow Industries.

d. Flo Fab Inc.

e. Marsh Bellofram.

f. Miljoco Corporation.

g. Noshok.

h. Palmer Wahl Instrumentation Group.

i. REOTEMP Instrument Corporation.

j. Tel-Tru Manufacturing Company.

k. Trerice, H. O. Co.

l. WATTS.

m. Weiss Instruments, Inc.

n. WIKA Instrument Corporation.

o. Winters Instruments - U.S.

2. Standard: ASME B40.100.

3. Case: Sealed type; cast aluminum or drawn steel; 4-1/2-inch nominal diameter with back flange and holes for panel mounting.

4. Pressure-Element Assembly: Bourdon tube unless otherwise indicated.

5. Pressure Connection: Brass, with NPS 1/4 or NPS 1/2, ASME B1.20.1 pipe threads and bottom-outlet type unless back-outlet type is indicated.

6. Movement: Mechanical, with link to pressure element and connection to pointer.

7. Dial: Nonreflective aluminum with permanently etched scale markings graduated in psi and kPa.

8. Pointer: Dark-colored metal.

9. Window: Glass.

10. Ring: Metal.

11. Accuracy: Grade A, plus or minus 1 percent of middle half of scale range.

D. Remote-Mounted, Plastic-Case, Dial-Type Pressure Gages:

1. Manufacturers: Subject to compliance with requirements, provide products by one of the following:

    a. Ametek U.S. Gauge.

    b. Ashcroft Inc.

    c. Miljoco Corporation.

    d. Noshok.

    e. Palmer Wahl Instrumentation Group.

    f. REOTEMP Instrument Corporation.

    g. Tel-Tru Manufacturing Company.

    h. Trerice, H. O. Co.

    i. Weiss Instruments, Inc.

    j. WIKA Instrument Corporation.

    k. Winters Instruments - U.S.

2. Standard: ASME B40.100.

3. Case: Sealed type; plastic; 4-1/2-inch nominal diameter with back flange and holes for panel mounting.

4. Pressure-Element Assembly: Bourdon tube unless otherwise indicated.

5. Pressure Connection: Brass, with NPS 1/4 or NPS 1/2, ASME B1.20.1 pipe threads and bottom-outlet type unless back-outlet type is indicated.

6. Movement: Mechanical, with link to pressure element and connection to pointer.

7. Dial: Nonreflective aluminum with permanently etched scale markings graduated in psi and kPa.

8. Pointer: Dark-colored metal.

9. Window: Glass.

10. Accuracy: Grade A, plus or minus 1 percent of middle half of scale range.

2.08 GAGE ATTACHMENTS

A. Snubbers: ASME B40.100, brass; with NPS 1/4 or NPS 1/2, ASME B1.20.1 pipe threads and piston-type surge-dampening device. Include extension for use on insulated piping.

B. Siphons: Loop-shaped section of brass pipe with NPS 1/4 or NPS 1/2 pipe threads.

C. Valves: Brass or stainless-steel needle, with NPS 1/4 or NPS 1/2, ASME B1.20.1 pipe threads.

2.09 TEST PLUGS

A. Manufacturers: Subject to compliance with requirements, provide products by one of the following:

1. Flow Design, Inc.

2. Miljoco Corporation.

3. Nexus Valve, Inc.

4. Peterson Equipment Co., Inc.

5. Sisco Manufacturing Company, Inc.

6. Trerice, H. O. Co.

7. WATTS.

8. Weiss Instruments, Inc.

9. Weksler Glass Thermometer Corp.

B. Description: Test-station fitting made for insertion in piping tee fitting.

C. Body: Brass or stainless steel with core inserts and gasketed and threaded cap. Include extended stem on units to be installed in insulated piping.

D. Thread Size: NPS 1/4 or NPS 1/2, ASME B1.20.1 pipe thread.

E. Minimum Pressure and Temperature Rating: 500 psig at 200 deg F.

F. Core Inserts: Chlorosulfonated polyethylene synthetic and EPDM self-sealing rubber.

2.10 TEST-PLUG KITS

A. Manufacturers: Subject to compliance with requirements, provide products by one of the following:

1. Flow Design, Inc.
2. Miljoco Corporation.
3. Nexus Valve, Inc.
4. Peterson Equipment Co., Inc.
5. Sisco Manufacturing Company, Inc.
6. Trerice, H. O. Co.
7. WATTS.
8. Weiss Instruments, Inc.

B. Furnish one test-plug kit(s) containing one thermometer(s), one pressure gage and adapter, and carrying case. Thermometer sensing elements, pressure gage, and adapter probes shall be of diameter to fit test plugs and of length to project into piping.

C. Low-Range Thermometer: Small, bimetallic insertion type with 1- to 2-inch- diameter dial and tapered-end sensing element. Dial range shall be at least 25 to 125 deg F.

D. High-Range Thermometer: Small, bimetallic insertion type with 1- to 2-inch- diameter dial and tapered-end sensing element. Dial range shall be at least 0 to 220 deg F.

E. Pressure Gage: Small, Bourdon-tube insertion type with 2- to 3-inch- diameter dial and probe. Dial range shall be at least 0 to 200 psig.

F. Carrying Case: Metal or plastic, with formed instrument padding.

2.11 SIGHT FLOW INDICATORS

A. Manufacturers: Subject to compliance with requirements, provide products by one of the following:

1. ARCHON Industries, Inc.
2. Dwyer Instruments, Inc.
3. Ernst Flow Industries.
4. John C. Ernst Co., Inc.
5. KOBOLD Instruments, Inc. - USA.
6. OPW Engineered Systems; OPW Fluid Transfer Group; a Dover company.
7. Pentair Valves & Controls; Penberthy Brand.
8. Rosemount Inc.; Emerson Electric Company.

B. Description: Piping inline-installation device for visual verification of flow.

C. Construction: Bronze or stainless-steel body, with sight glass and ball, flapper, or paddle wheel indicator, and threaded or flanged ends.

D. Minimum Pressure Rating: 150 psig.

E. Minimum Temperature Rating: .

F. End Connections for NPS 2 and Smaller: Threaded.

G. End Connections for NPS 2-1/2 and Larger: Flanged.

2.12 FLOWMETERS

A. Turbine Flowmeters:

1. Manufacturers: Subject to compliance with requirements, provide products by one of the following:
   a. ABB, Industrial Automation Division.
   b. EMCO Flow Systems.
   c. ERDCO Engineering Corp.
   d. Hoffer Flow Controls, Inc.
   e. Liquid Controls.
   f. McCrometer, Inc.
   g. Midwest Instruments & Controls Corp.
   h. ONICON Incorporated.

i. SeaMetrics, Inc.

j. Sponsler, Inc.

2. Description: Flowmeter with sensor and indicator.

3. Flow Range: Sensor and indicator shall cover operating range of equipment or system served.

4. Sensor: Impeller turbine; for inserting in pipe fitting or for installing in piping and measuring flow directly in gallons per minute.

   a. Design: Device or pipe fitting with inline turbine and integral direct-reading scale for water.

   b. Construction: Bronze or stainless-steel body, with plastic turbine or impeller.

   c. Minimum Pressure Rating: 150 psig.

   d. Minimum Temperature Rating: 180 deg F.

5. Indicator: Hand-held meter; either an integral part of sensor or a separate meter.

6. Accuracy: Plus or minus 1-1/2 percent.

7. Display: Shows rate of flow, with register to indicate total volume in gallons.

8. Operating Instructions: Include complete instructions with each flowmeter.

B. Venturi Flowmeters:

1. Manufacturers: Subject to compliance with requirements, provide products by one of the following:

   a. ABB, Industrial Automation Division.

   b. Gerand Engineering Co.

   c. Hyspan Precision Products, Inc.

   d. Nexus Valve, Inc.

   e. Preso Meters.

   f. S. A. Armstrong Limited.

   g. Victaulic Company.

2. Description: Flowmeter with calibrated flow-measuring element, hoses or tubing, fittings, valves, indicator, and conversion chart.

3. Flow Range: Sensor and indicator shall cover operating range of equipment or system served.

4. Sensor: Venturi-type, calibrated, flow-measuring element; for installation in piping.

   a. Design: Differential-pressure-type measurement for water.

   b. Construction: Bronze, brass, or factory-primed steel, with brass fittings and attached tag with flow conversion data.

   c. Minimum Pressure Rating: 250 psig.

   d. Minimum Temperature Rating: 250 deg F.

   e. End Connections for NPS 2 and Smaller: Threaded.

   f. End Connections for NPS 2-1/2 and Larger: Flanged or welded.

   g. Flow Range: Flow-measuring element and flowmeter shall cover operating range of equipment or system served.

5. Permanent Indicators: Meter suitable for wall or bracket mounting, calibrated for connected flowmeter element, and having 6-inch-diameter, or equivalent, dial with fittings and copper tubing for connecting to flowmeter element.

   a. Scale: Gallons per minute.

   b. Accuracy: Plus or minus 1 percent between 20 and 80 percent of scale range.

6. Portable Indicators: Hand-held, differential-pressure type, calibrated for connected flowmeter element and having two 12-foot hoses, with carrying case.

   a. Scale: Gallons per minute.

   b. Accuracy: Plus or minus 2 percent between 20 and 80 percent of scale range.

7. Display: Shows rate of flow, with register to indicate total volume in gallons.

8. Conversion Chart: Flow rate data compatible with sensor.

9. Operating Instructions: Include complete instructions with each flowmeter.

2.13 THERMAL-ENERGY METERS

A. Ultrasonic, Thermal-Energy Meters:

1. Manufacturers: Subject to compliance with requirements, provide products by one of the following:

   a. EMCO Flow Systems.

b. ONICON Incorporated.

c. Siemens Industry, Inc., Energy Management Division.

d. Veris Industries.

2. Description: Meter with flow sensor, temperature sensors, transmitter, indicator, and connecting wiring.

3. Flow Sensor: Transit-time ultrasonic type with transmitter.

4. Temperature Sensors: Insertion-type or strap-on transducer.

5. Indicator: Solid-state, integrating-type meter with integral battery pack.

a. Data Output: Six-digit electromechanical counter with readout in kilowatts per hour or British thermal units.

b. Battery Pack: Five-year lithium battery.

6. Accuracy: Plus or minus 1 percent.

7. Display: Visually indicates total fluid volume in gallons and thermal-energy flow in kilowatts per hour or British thermal units.

8. Operating Instructions: Include complete instructions with each thermal-energy meter system.

PART 3 - EXECUTION

3.01 INSTALLATION

A. Install thermowells with socket extending a minimum of 2 inches into fluid to center of pipe and in vertical position in piping tees.

B. Install thermowells of sizes required to match thermometer connectors. Include bushings if required to match sizes.

C. Install thermowells with extension on insulated piping.

D. Fill thermowells with heat-transfer medium.

E. Install direct-mounted thermometers in thermowells and adjust vertical and tilted positions.

F. Install remote-mounted thermometer bulbs in thermowells and install cases on panels; connect cases with tubing and support tubing to prevent kinks. Use minimum tubing length.

G. Install duct-thermometer mounting brackets in walls of ducts. Attach to duct with screws.

H. Install direct-mounted pressure gages in piping tees with pressure gage located on pipe at the most readable position.

I. Install remote-mounted pressure gages on panel.

J. Install valve and snubber in piping for each pressure gage for fluids (except steam).

K. Install valve and syphon fitting in piping for each pressure gage for steam.

L. Install test plugs in piping tees.

M. Install flow indicators in piping systems in accessible positions for easy viewing.

N. Assemble and install connections, tubing, and accessories between flow-measuring elements and flowmeters according to manufacturer's written instructions.

O. Install flowmeter elements in accessible positions in piping systems.

P. Install wafer-orifice flowmeter elements between pipe flanges.

Q. Install differential-pressure-type flowmeter elements, with at least minimum straight lengths of pipe, upstream and downstream from element according to manufacturer's written instructions.

R. Install permanent indicators on walls or brackets in accessible and readable positions.

S. Install connection fittings in accessible locations for attachment to portable indicators.

T. Mount thermal-energy meters on wall if accessible; if not, provide brackets to support meters.

U. Install thermometers in the following locations:

1. Inlet and outlet of each hydronic zone.
2. Inlet and outlet of each hydronic boiler.
3. Two inlets and two outlets of each chiller.
4. Inlet and outlet of each hydronic coil in air-handling units.
5. Two inlets and two outlets of each hydronic heat exchanger.
6. Inlet and outlet of each thermal-storage tank.
7. Outside-, return-, supply-, and mixed-air ducts.
8. .

V. Install pressure gages in the following locations:

1. Discharge of each pressure-reducing valve.
2. Inlet and outlet of each chiller chilled-water and condenser-water connection.
3. Suction and discharge of each pump.

3.02 CONNECTIONS

A. Install meters and gages adjacent to machines and equipment to allow space for service and maintenance of meters, gages, machines, and equipment.

B. Connect flowmeter-system elements to meters.

C. Connect flowmeter transmitters to meters.

D. Connect thermal-energy meter transmitters to meters.

3.03 ADJUSTING

A. After installation, calibrate meters according to manufacturer's written instructions.

B. Adjust faces of meters and gages to proper angle for best visibility.

3.04 THERMOMETER SCHEDULE

A. Thermometers at inlet and outlet of each hydronic zone shall be one of the following:

1. Liquid-filled, bimetallic-actuated type.
2. Direct-mounted, metal-case, vapor-actuated type.
3. Industrial-style, liquid-in-glass type.
4. Direct-mounted, light-activated type.
5. Test plug with EPDM self-sealing rubber inserts.

B. Thermometers at inlets and outlets of each chiller shall be one of the following:

1. Liquid-filled, bimetallic-actuated type.
2. Direct-mounted, plastic-case, vapor-actuated type.
3. Industrial-style, liquid-in-glass type.
4. Direct-mounted, light-activated type.
5. Test plug with EPDM self-sealing rubber inserts.

C. Thermometers at inlet and outlet of each hydronic coil in air-handling units and built-up central systems shall be one of the following:

1. Liquid-filled, bimetallic-actuated type.
2. Direct Remote-mounted, metal plastic-case, vapor-actuated type.
3. Compact Industrial-style, liquid-in-glass type.

4. Direct-mounted, light-activated type.

5. Test plug with EPDM self-sealing rubber inserts.

D. Thermometers at inlets and outlets of each hydronic heat exchanger shall be one of the following:

1. Liquid-filled, bimetallic-actuated type.

2. Direct-mounted, plastic-case, vapor-actuated type.

3. Industrial-style, liquid-in-glass type.

4. Direct-mounted, light-activated type.

5. Test plug with EPDM self-sealing rubber inserts.

E. Thermometers at inlet and outlet of each thermal-storage tank shall be one of the following:

1. Liquid-filled, bimetallic-actuated type.

2. Direct-mounted, plastic-case, vapor-actuated type.

3. Industrial-style, liquid-in-glass type.

4. Direct-mounted, light-activated type.

5. Test plug with EPDM self-sealing rubber inserts.

F. Thermometers at outside-, return-, supply-, and mixed-air ducts shall be one of the following:

1. Liquid-filled, bimetallic-actuated type.

2. Direct Remote-mounted, metal plastic-case, vapor-actuated type.

3. Industrial-style, liquid-in-glass type.

4. Direct-mounted, light-activated type.

G. Thermometer stems shall be of length to match thermowell insertion length.

3.05 THERMOMETER SCALE-RANGE SCHEDULE

A. Scale Range for Chilled-Water Piping: 0 to 100 deg F and minus 20 to plus 50 deg C.

B. Scale Range for Air Ducts: Minus 40 to plus 160 deg F and minus 40 to plus 100 deg C.

3.06 PRESSURE-GAGE SCHEDULE

A. Pressure gages at discharge of each pressure-reducing valve shall be one of the following:

1. Sealed, direct-mounted, metal case.

2. Sealed, direct-mounted, plastic case.

3. Test plug with EPDM self-sealing rubber inserts.

B. Pressure gages at inlet and outlet of each chiller chilled-water and condenser-water connection shall be one of the following:

1. Sealed, direct-mounted, metal case.

2. Sealed, direct-mounted, plastic case.

3. Test plug with EPDM self-sealing rubber inserts.

C. Pressure gages at suction and discharge of each pump shall be one of the following:

1. Sealed, direct-mounted, metal case.

2. Sealed, direct-mounted, plastic case.

3. Test plug with EPDM self-sealing rubber inserts.

3.07 PRESSURE-GAGE SCALE-RANGE SCHEDULE

A. Scale Range for Chilled-Water Piping: 0 to 160 psi and 0 to 1100 kPa. Retain one or more of first seven paragraphs below. If retaining more than one scale range, indicate location of each on Drawings.

3.08 FLOWMETER SCHEDULE

A. Flowmeters for Chilled-Water Piping: Venturi type.

3.09 THERMAL-ENERGY METER SCHEDULE

A. Thermal-Energy Meters for Chilled-Water Piping: Ultrasonic type.

END OF SECTION

23 05 23.11

GLOBE VALVES FOR HVAC PIPING

PART 1 - GENERAL

1.01 RELATED DOCUMENTS

A. Drawings and general provisions of the Contract, including General and Supplementary Conditions and Division 01 Specification Sections, apply to this Section.

1.02 SUMMARY

A. Section Includes:

1. Bronze angle valves.

2. Bronze globe valves.

3. Iron globe valves.

4. Chainwheels.

1.03 DEFINITIONS

A. CWP: Cold working pressure.

1.04 ACTION SUBMITTALS

A. Product Data: For each type of valve.

1.05 DELIVERY, STORAGE, AND HANDLING

A. Prepare valves for shipping as follows:

1. Protect internal parts against rust and corrosion.

2. Protect threads, flange faces, grooves, and weld ends.

3. Set angle and globe valves closed to prevent rattling.

B. Use the following precautions during storage:

1. Maintain valve end protection.

2. Store valves indoors and maintain at higher-than-ambient dew point temperature. If outdoor storage is necessary, store valves off the ground in watertight enclosures.

C. Use sling to handle large valves; rig sling to avoid damage to exposed parts. Do not use handwheels or stems as lifting or rigging points.

PART 2 - PRODUCTS

GENERAL REQUIREMENTS FOR VALVES

A. Source Limitations for Valves: Obtain each type of valve from single source from single manufacturer.

B. ASME Compliance:

1. ASME B1.20.1 for threads for threaded-end valves.

2. ASME B16.1 for flanges on iron valves.

3. ASME B16.10 and ASME B16.34 for ferrous valve dimensions and design criteria.

4. ASME B16.18 for solder joint.

5. ASME B31.1 for power piping valves.

6. ASME B31.9 for building services piping valves.

C. Refer to HVAC valve schedule articles for applications of valves.

D. Valve Pressure and Temperature Ratings: Not less than indicated and as required for system pressures and temperatures.

E. Valve Sizes: Same as upstream piping unless otherwise indicated.

F. Valves in Insulated Piping: With 2-inch stem extensions.

2.02 BRONZE ANGLE VALVES

A. Bronze Angle Valves, Class 125:

1. Manufacturers: Subject to compliance with requirements, provide products by one of the following:

a. American Valve, Inc.

b. Hammond Valve.

c. Milwaukee Valve Company.

d. NIBCO INC.

2. Description:

a. Standard: MSS SP-80, Type 1.

b. CWP Rating: 200 psig.

c. Body Material: ASTM B62, bronze with integral seat and screw-in bonnet.

d. Ends: Threaded.

e. Stem and Disc: **Bronze**.

f. Packing: Asbestos free.

g. Handwheel: Bronze or aluminum.

B. Bronze Angle Valves, Class 150:

1. Manufacturers: Subject to compliance with requirements, provide products by one of the following:

a. KITZ Corporation.

b. Stockham; a Crane Co. brand.

2. Description:

a. Standard: MSS SP-80, Type 1.

b. CWP Rating: 300 psig.

c. Body Material: ASTM B62, bronze with integral seat and union-ring bonnet.

d. Ends: Threaded.

e. Stem and Disc: **Bronze**.

f. Packing: Asbestos free.

g. Handwheel: Bronze or aluminum.

2.03 BRONZE GLOBE VALVES

A. Bronze Globe Valves, Class 125:

1. Manufacturers: Subject to compliance with requirements, provide products by one of the following:

a. Apollo Valves; a part of Aalberts Integrated Piping Systems.

b. Crane; a Crane brand.

c. Hammond Valve.

d. Jomar Valve.

e. KITZ Corporation.

f. Milwaukee Valve Company.

g. NIBCO INC.

h. Powell Valves.

i. Red-White Valve Corp.

j. Stockham; a Crane Co. brand.

k. Valve Solutions, Inc.

l. WATTS.

2. Description:

a. Standard: MSS SP-80, Type 1.

b. CWP Rating: 200 psig.

c. Body Material: ASTM B62, bronze with integral seat and screw-in bonnet.

d. Ends: Threaded or socket weld.

e. Stem and Disc: **Bronze**.

f. Packing: Asbestos free.

g. Handwheel: Bronze or aluminum.

B. Bronze Globe Valves, Class 150:

1. Manufacturers: Subject to compliance with requirements, provide products by one of the following:

a. Apollo Valves; a part of Aalberts Integrated Piping Systems.

b. Crane; a Crane brand.

c. Hammond Valve.

d. KITZ Corporation.

e. Milwaukee Valve Company.

f. NIBCO INC.

g. Powell Valves.

h. Red-White Valve Corp.

i. Siemens Industry, Inc., Building Technologies Division.

j. Valve Solutions, Inc.

k. WATTS.

2. Description:

a. Standard: MSS SP-80, Type 2.

b. CWP Rating: 300 psig.

c. Body Material: ASTM B62, bronze with integral seat and union-ring bonnet.

d. Ends: Threaded.

e. Stem: Bronze.

f. Disc: **Bronze**.

g. Packing: Asbestos free.

h. Handwheel: Bronze or aluminum.

2.04 IRON GLOBE VALVES

A. Iron Globe Valves, Class 125:

1. Manufacturers: Subject to compliance with requirements, provide products by one of the following:

a. Apollo Valves; a part of Aalberts Integrated Piping Systems.

b. Crane; a Crane brand.

c. Hammond Valve.

d. Jenkins Valves; a Crane Co. brand.

e. KITZ Corporation.

f. Milwaukee Valve Company.

g. NIBCO INC.

h. Powell Valves.

i. Red-White Valve Corp.

j. Siemens Industry, Inc., Building Technologies Division.

k. Stockham; a Crane Co. brand.

l. Valve Solutions, Inc.

m. WATTS.

2. Description:

    a. Standard: MSS SP-85, Type I.

    b. CWP Rating: 200 psig.

    c. Body Material: ASTM A126, gray iron with bolted bonnet.

    d. Ends: Flanged.

    e. Trim: Bronze.

    f. Packing and Gasket: Asbestos free.

    g. Operator: Handwheel or chainwheel.

B. Iron Globe Valves, Class 250:

1. Manufacturers: Subject to compliance with requirements, provide products by one of the following:

    a. Apollo Valves; a part of Aalberts Integrated Piping Systems.

    b. Crane; a Crane brand.

    c. Hammond Valve.

    d. Jenkins Valves; a Crane Co. brand.

    e. Milwaukee Valve Company.

    f. NIBCO INC.

    g. Siemens Industry, Inc., Building Technologies Division.

    h. Stockham; a Crane Co. brand.

    i. WATTS.

2. Description:

    a. Standard: MSS SP-85, Type I.

    b. CWP Rating: 500 psig.

    c. Body Material: ASTM A126, gray iron with bolted bonnet.

    d. Ends: Flanged.

    e. Trim: Bronze.

    f. Packing and Gasket: Asbestos free.

g. Operator: Handwheel or chainwheel.

2.05 CHAINWHEELS

A. Manufacturers: Subject to compliance with requirements, provide products by one of the following:

1. Babbitt Steam Specialty Co.

2. Roto Hammer Industries; Rotork.

3. Trumbull Industries.

B. Description: Valve actuation assembly with sprocket rim, chain guides, chain

1. Sprocket Rim with Chain Guides: **Aluminum** or **Bronze**, of type and size required for valve. **Include zinc or epoxy coating.**

2. Chain: **Hot-dip-galvanized or Stainless steel**, of size required to fit sprocket rim.

PART 3 - EXECUTION

3.01 EXAMINATION

A. Examine valve interior for cleanliness, freedom from foreign matter, and corrosion. Remove special packing materials, such as blocks, used to prevent disc movement during shipping and handling.

B. Operate valves in positions from fully open to fully closed. Examine guides and seats made accessible by such operations.

C. Examine threads on valve and mating pipe for form and cleanliness.

D. Examine mating flange faces for conditions that might cause leakage. Check bolting for proper size, length, and material. Verify that gasket is of proper size, that its material composition is suitable for service, and that it is free from defects and damage.

E. Do not attempt to repair defective valves; replace with new valves.

3.02 VALVE INSTALLATION

A. Install valves with unions or flanges at each piece of equipment arranged to allow service, maintenance, and equipment removal without system shutdown.

B. Locate valves for easy access and provide separate support where necessary.

C. Install valves in horizontal piping with stem at or above center of pipe.

D. Install valves in position to allow full stem movement.

E. Install chainwheels on operators for globe valves 4 inches and larger and more than **96 inches** above floor. Extend chains to **60 inches** above finished floor.

F. Install valve tags. Comply with requirements in Section 230553 "Identification for HVAC Piping and Equipment" for valve tags and schedules.

3.03 ADJUSTING

A. Adjust or replace valve packing after piping systems have been tested and put into service but before final adjusting and balancing. Replace valves if persistent leaking occurs.

3.04 GENERAL REQUIREMENTS FOR VALVE APPLICATIONS

A. If valve applications are not indicated, use the following:

1. Throttling Service except Steam: **Globe** valves.

2. Throttling Service, Steam: **Globe** valves.

B. If valves with specified CWP ratings are unavailable, the same types of valves with higher CWP ratings may be substituted.

C. Select valves with the following end connections:

1. For Copper Tubing, NPS 2 and Smaller: Threaded ends except where solder-joint valve-end option is indicated in valve schedules.

2. For Copper Tubing, NPS 2-1/2 to NPS 4: Flanged ends except where threaded valve-end option is indicated in valve schedules.

3. For Copper Tubing, NPS 5 and Larger: Flanged ends.

4. For Steel Piping, NPS 2 and Smaller: Threaded ends.

5. For Steel Piping, NPS 2-1/2 to NPS 4: Flanged ends except where threaded valve-end option is indicated in valve schedules.

6. For Steel Piping, NPS 5 and Larger: Flanged ends.

3.05 CHILLED-WATER VALVE SCHEDULE

A. Pipe NPS 2 and Smaller: Bronze angle or globe valves, **Class 150**, **bronze** disc, with **soldered** ends.

B. Pipe NPS 2-1/2 and Larger: Iron globe valves, **Class 250**, with flanged ends.

3.06 CONDENSER-WATER VALVE SCHEDULE

A. Pipe NPS 2 and Smaller: Bronze angle or globe valves, **Class 150**, with **bronze** disc and **soldered** ends.

B. Pipe NPS 2-1/2 and Larger: Iron globe valves, **Class 250**, with flanged ends.

3.07 HEATING-WATER VALVE SCHEDULE

A. Pipe NPS 2 and Smaller: Bronze angle or globe valves, **Class 150**, with **bronze** disc, and **soldered** ends.

B. Pipe NPS 2-1/2 and Larger: Iron globe valves, **Class 250**, with flanged ends.

3.08 LOW-PRESSURE STEAM VALVE SCHEDULE (15 PSIG OR LESS)

A. Pipe NPS 2 and Smaller: Bronze angle or globe valves, **Class 150**, **bronze** disc, and s**oldered** ends.

B. Pipe NPS 2-1/2 and Larger: Iron globe valves, **Class 250**, with flanged ends.

3.09 HIGH-PRESSURE STEAM VALVE SCHEDULE (MORE THAN 15 PSIG

A. Pipe NPS 2 and Smaller: Bronze angle or globe valves, **Class 150**, with **bronze** disc and **soldered** ends.

B. Pipe Sizes NPS 2-1/2 and Larger: Iron globe valves, **Class 250.**

3.10 STEAM-CONDENSATE VALVE SCHEDULE

A. Pipe NPS 2 and Smaller: Bronze angle or globe valves, **Class 150**, with **bronze** disc, and with **soldered** ends.

B. Pipe NPS 2-1/2 and Larger: Iron globe valves, **Class 250**.

END OF SECTION

23 05 23.12

BALL VALVES FOR HVAC PIPING

PART 1 - GENERAL

1.01 RELATED DOCUMENTS

A. Drawings and general provisions of the Contract, including General and Supplementary Conditions and Division 01 Specification Sections, apply to this Section.

1.02 SUMMARY

A. Section Includes:

1. Brass ball valves.

2. Bronze ball valves.

3. Steel ball valves.

4. Iron ball valves.

1.03 DEFINITIONS

A. CWP: Cold working pressure.

B. SWP: Steam working pressure.

1.04 ACTION SUBMITTALS

A. Product Data: For each type of valve.

1.05 DELIVERY, STORAGE, AND HANDLING

A. Prepare valves for shipping as follows:

1. Protect internal parts against rust and corrosion.

2. Protect threads, flange faces, and weld ends.

3. Set ball valves open to minimize exposure of functional surfaces.

B. Use the following precautions during storage:

1. Maintain valve end protection.

2. Store valves indoors and maintain at higher-than-ambient-dew-point temperature. If outdoor storage is necessary, store valves off the ground in watertight enclosures.

C. Use sling to handle large valves; rig sling to avoid damage to exposed parts. Do not use operating handles or stems as lifting or rigging points.

PART 2 - PRODUCTS

2.01 GENERAL REQUIREMENTS FOR VALVES

A. Source Limitations for Valves: Obtain each type of valve from single source from single manufacturer.

B. ASME Compliance:

1. ASME B1.20.1 for threads for threaded-end valves.

2. ASME B16.1 for flanges on iron valves.

3. ASME B16.5 for flanges on steel valves.

4. ASME B16.10 and ASME B16.34 for ferrous valve dimensions and design criteria.

5. ASME B16.18 for solder-joint connections.

6. ASME B31.1 for power piping valves.

7. ASME B31.9 for building services piping valves.

C. Bronze valves shall be made with dezincification-resistant materials. Bronze valves made with copper alloy (brass) containing more than 15 percent zinc are not permitted.

D. Refer to HVAC valve schedule articles for applications of valves.

E. Valve Pressure-Temperature Ratings: Not less than indicated and as required for system pressures and temperatures.

F. Valve Sizes: Same as upstream piping unless otherwise indicated.

G. Valve Actuator Types:

1. Gear Actuator: For quarter-turn valves NPS 4 and larger.

2. Handlever: For quarter-turn valves smaller than NPS 4.

H. Valves in Insulated Piping:

1. Include 2-inch stem extensions.

2. Extended operating handle of nonthermal-conductive material, and protective sleeves that allow operation of valves without breaking the vapor seals or disturbing insulation.

3. Memory stops that are fully adjustable after insulation is applied.

I. Valve Bypass and Drain Connections: MSS SP-45.

2.02 BRONZE BALL VALVES

A. Bronze Ball Valves, Two-Piece with Full Port and Bronze or Brass Trim, Threaded Ends:

1. Manufacturers: Subject to compliance with requirements, provide products by one of the following:

a. Apollo Valves; a part of Aalberts Integrated Piping Systems.

b. Crane; a Crane brand.

c. Hammond Valve.

d. Milwaukee Valve Company.

e. NIBCO INC.

f. Red-White Valve Corp.

g. WATTS.

2. Description:

a. Standard: MSS SP-110.

b. SWP Rating: 150 psig.

c. CWP Rating: 600 psig.

d. Body Design: Two piece.

e. Body Material: Bronze.

f. Ends: Threaded.

g. Seats: PTFE.

h. Stem: Bronze.

i. Ball: Chrome-plated brass.

j. Port: Full.

B. Bronze Ball Valves, Two-Piece with Full Port and Stainless-Steel Trim:

1. Manufacturers: Subject to compliance with requirements, provide products by one of the following:

a. Apollo Valves; a part of Aalberts Integrated Piping Systems.

b. Crane; a Crane brand.

c. Hammond Valve.

d. Milwaukee Valve Company.

e. NIBCO INC.

f. Red-White Valve Corp.

g. WATTS.

2. Description:

a. Standard: MSS SP-110.

b. SWP Rating: 150 psig.

c. CWP Rating: 600 psig.

d. Body Design: Two piece.

e. Body Material: Bronze.

f. Ends: Threaded.

g. Seats: PTFE.

h. Stem: Stainless steel.

i. Ball: Stainless steel, vented.

j. Port: Full.

PART 3 - EXECUTION

3.01 EXAMINATION

A. Examine valve interior for cleanliness, freedom from foreign matter, and corrosion. Remove special packing materials, such as blocks, used to prevent disc movement during shipping and handling.

B. Operate valves in positions from fully open to fully closed. Examine guides and seats made accessible by such operations.

C. Examine threads on valve and mating pipe for form and cleanliness.

D. Examine mating flange faces for conditions that might cause leakage. Check bolting for proper size, length, and material. Verify that gasket is of proper size, that its material composition is suitable for service, and that it is free from defects and damage.

E. Do not attempt to repair defective valves; replace with new valves.

3.02 VALVE INSTALLATION

A. Install valves with unions or flanges at each piece of equipment arranged to allow service, maintenance, and equipment removal without system shutdown.

B. Locate valves for easy access and provide separate support where necessary.

C. Install valves in horizontal piping with stem at or above center of pipe.

D. Install valves in position to allow full stem movement.

E. Install valve tags. Comply with requirements in Section 230553 "Identification for HVAC Piping and Equipment" for valve tags and schedules.

3.03 GENERAL REQUIREMENTS FOR VALVE APPLICATIONS

A. If valves with specified SWP classes or CWP ratings are unavailable, the same types of valves with higher SWP classes or CWP ratings may be substituted.

B. Select valves with the following end connections:

1. For Copper Tubing, NPS 2 and Smaller: Threaded ends except where solder-joint valve-end option or press-end option is indicated in valve schedules below.

2. For Copper Tubing, NPS 2-1/2 to NPS 4: Flanged ends except where threaded valve-end option is indicated in valve schedules below.

3. For Copper Tubing, NPS 5 and Larger: Flanged ends.

4. For Steel Piping, NPS 2 and Smaller: Threaded ends.

5. For Steel Piping, NPS 2-1/2 to NPS 4: Flanged ends except where threaded valve-end option is indicated in valve schedules below.

6. For Steel Piping, NPS 5 and Larger: Flanged ends.

3.04 CHILLED-WATER VALVE SCHEDULE

A. Pipe NPS 2 and Smaller: bronze ball valves, two piece, with stainless-steel trim, full port, threaded-joint ends.

1. Valves may be provided with solder-joint ends instead of threaded ends.

B. Pipe NPS 2-1/2 and Larger:

1. Iron ball valves, Class 125.

a. Iron Valves, NPS 2-1/2 to NPS 4: May be provided with threaded ends instead of flanged ends.

2. Steel ball valves, Class 150.

END OF SECTION

23 05 23.13

BUTTERFLY VALVES FOR HVAC PIPING

PART 1 - GENERAL

1.01 RELATED DOCUMENTS

A. Drawings and general provisions of the Contract, including General and Supplementary Conditions and Division 01 Specification Sections, apply to this Section.

1.02 SUMMARY

A. Section Includes:

1. Iron, single-flange butterfly valves.
2. Iron, grooved-end butterfly valves.
3. High-performance butterfly valves.
4. Chainwheels.

1.03 DEFINITIONS

A. CWP: Cold working pressure.

B. EPDM: Ethylene propylene copolymer rubber.

C. NBR: Acrylonitrile-butadiene, Buna-N, or nitrile rubber.

D. SWP: Steam working pressure.

1.04 ACTION SUBMITTALS

A. Product Data: For each type of valve.

1.05 DELIVERY, STORAGE, AND HANDLING

A. Prepare valves for shipping as follows:

1. Protect internal parts against rust and corrosion.
2. Protect threads, flange faces, grooves, and weld ends.
3. Set butterfly valves closed or slightly open.

B. Use the following precautions during storage:

1. Maintain valve end protection.

2. Store valves indoors and maintain at higher-than-ambient-dew-point temperature. If outdoor storage is necessary, store valves off the ground in watertight enclosures.

C. Use sling to handle large valves; rig sling to avoid damage to exposed parts. Do not use handwheels or stems as lifting or rigging points.

PART 2 - PRODUCTS

2.01 GENERAL REQUIREMENTS FOR VALVES

A. Source Limitations for Valves: Obtain each type of valve from single source from single manufacturer.

B. ASME Compliance:

1. ASME B16.1 for flanges on iron valves.

2. ASME B16.5 for pipe flanges and flanged fittings, NPS 1/2 through NPS 24.

3. ASME B16.10 and ASME B16.34 for ferrous valve dimensions and design criteria.

4. ASME B31.1 for power piping valves.

5. ASME B31.9 for building services piping valves.

C. AWWA Compliance: Comply with AWWA C606 for grooved-end connections.

D. Valve Pressure-Temperature Ratings: Not less than indicated and as required for system pressures and temperatures.

E. Valve Sizes: Same as upstream piping unless otherwise indicated.

F. Valve Actuator Types:

1. Gear Actuator: For valves NPS 8 and larger.

2. Handlever: For valves NPS 6 and smaller.

3. Chainwheel: Device for attachment to gear, stem, or other actuator of size and with chain for mounting height, according to "Valve Installation" Article.

G. Valves in Insulated Piping: With 2-inch stem extensions with extended necks.

2.02 IRON, SINGLE-FLANGE BUTTERFLY VALVES

A. Iron, Single-Flange Butterfly Valves with Aluminum-Bronze Disc:

1. Manufacturers: Subject to compliance with requirements, provide products by one of the following:

a. ABZ Valve and Controls.

b. Apollo Valves; a part of Aalberts Integrated Piping Systems.

c. Bray Controls USA; a division of Bray International, Inc.

d. Center Line; a Crane Co. brand.

e. DeZURIK.

f. DynaQuip Controls.

g. Emerson Commercial & Residential Solutions; Emerson Electric Co.

h. Flo Fab Inc.

i. FNW; Ferguson Enterprises, Inc.

j. Hammond Valve.

k. Jamesbury; Metso.

l. Jenkins Valves; a Crane Co. brand.

m. Jomar Valve.

n. Kennedy Valve Company; a division of McWane, Inc.

o. KITZ Corporation.

p. Lance Valves.

q. Legend Valve & Fitting, Inc.

r. Milwaukee Valve Company.

s. NIBCO INC.

t. Norriseal.

u. Red-White Valve Corp.

v. Stockham; a Crane Co. brand.

w. Sure Flow Equipment Inc.

x. Viega LLC.

y. WATTS.

z. Zurn Industries, LLC.

2. Description:

a. Standard: MSS SP-67, Type I.

b. CWP Rating: 150 psig.

c. Body Design: Lug type; suitable for bidirectional dead-end service at rated pressure without use of downstream flange.

d. Body Material: ASTM A126, cast iron or ASTM A536, ductile iron.

e. Seat: EPDM.

f. Stem: One- or two-piece stainless steel.

g. Disc: Aluminum bronze.

B. Iron, Single-Flange Butterfly Valves with Ductile-Iron Disc:

1. Manufacturers: Subject to compliance with requirements, provide products by one of the following:

a. ABZ Valve and Controls.

b. Apollo Valves; a part of Aalberts Integrated Piping Systems.

c. Bray Controls USA; a division of Bray International, Inc.

d. Center Line; a Crane Co. brand.

e. DeZURIK.

f. DynaQuip Controls.

g. Emerson Commercial & Residential Solutions; Emerson Electric Co.

h. Flo Fab Inc.

i. FNW; Ferguson Enterprises, Inc.

j. Hammond Valve.

k. Jamesbury; Metso.

l. Jenkins Valves; a Crane Co. brand.

m. Jomar Valve.

n. Kennedy Valve Company; a division of McWane, Inc.

o. KITZ Corporation.

p. Lance Valves.

q. Legend Valve & Fitting, Inc.

r. Milwaukee Valve Company.

s. NIBCO INC.

t. Norriseal.

u. Red-White Valve Corp.

v. Stockham; a Crane Co. brand.

w. Sure Flow Equipment Inc.

x. Viega LLC.

y. WATTS.

z. Zurn Industries, LLC.

2. Description:

a. Standard: MSS SP-67, Type I.

b. CWP Rating: 150 psig.

c. Body Design: Lug type; suitable for bidirectional dead-end service at rated pressure without use of downstream flange.

d. Body Material: ASTM A126, cast iron or ASTM A536, ductile iron.

e. Seat: EPDM.

f. Stem: One- or two-piece stainless steel.

g. Disc: Nickel-plated or -coated ductile iron.

2.03 DUCTILE-IRON, GROOVED-END BUTTERFLY VALVES

A. Iron, Grooved-End Butterfly Valves, 175 CWP:

1. Manufacturers: Subject to compliance with requirements, provide products by one of the following:

a. Grinnell G-Fire by Johnson Controls Company.

b. Kennedy Valve Company; a division of McWane, Inc.

c. Shurjoint-Apollo Piping Products USA Inc.

d. Tyco by Johnson Controls Company.

e. Victaulic Company.

2. Description:

a. Standard: MSS SP-67, Type I.

b. CWP Rating: 175 psig.

c. Body Material: Coated, ductile iron.

d. Stem: Two-piece stainless steel.

e. Disc: Coated, ductile iron.

f. Seal: EPDM.

2.04 CHAINWHEELS

A. Manufacturers: Subject to compliance with requirements, provide products by one of the following:

1. Babbitt Steam Specialty Co.

2. Roto Hammer Industries; Rotork.

3. Trumbull Industries.

B. Description: Valve actuation assembly with sprocket rim, chain guides, chain, and attachment brackets for mounting chainwheels directly to hand wheels.

1. Sprocket Rim with Chain Guides: Ductile iron, of type and size required for valve. Include zinc or epoxy coating.

2. Chain: Brass, of size required to fit sprocket rim.

PART 3 - EXECUTION

3.01 EXAMINATION

A. Examine valve interior for cleanliness, freedom from foreign matter, and corrosion. Remove special packing materials, such as blocks, used to prevent disc movement during shipping and handling.

B. Operate valves in positions from fully open to fully closed. Examine guides and seats made accessible by such operations.

C. Examine mating flange faces for damage. Check bolting for proper size, length, and material. Verify that gasket is of proper size, that its material composition is suitable for service, and that it is free from defects and damage.

D. Do not attempt to repair defective valves; replace with new valves.

3.02 VALVE INSTALLATION

A. Install valves with unions or flanges at each piece of equipment arranged to allow service, maintenance, and equipment removal without system shutdown.

B. Locate valves for easy access and provide separate support where necessary.

C. Install valves in horizontal piping with stem at or above center of pipe.

D. Install valves in position to allow full stem movement.

E. Install chainwheels on operators for butterfly valves NPS 4 and larger and more than 96 inches above floor. Extend chains to 60 inches above finished floor.

F. Install valve tags. Comply with requirements in Section 230553 "Identification for HVAC Piping and Equipment" for valve tags and schedules.

3.03 ADJUSTING

A. Adjust or replace valve packing after piping systems have been tested and put into service but before final adjusting and balancing. Replace valves if persistent leaking occurs.

3.04 CHILLED-WATER VALVE SCHEDULE

A. Pipe NPS 2-1/2 and Larger:

1. Iron, Single-Flange Butterfly Valves, NPS 2-1/2 to NPS 12: Ductile-iron disc, 200 CWP, and EPDM seat.

2. Iron, Single-Flange Butterfly Valves, NPS 14 to NPS 24: Ductile-iron disc, 150 CWP, and EPDM seat.

3. Iron, Grooved-End Butterfly Valves, NPS 2-1/2 to NPS 12: 175 CWP.

4. High-Performance Butterfly Valves: Single flange, Class 150.

END OF SECTION

23 05 23.14

CHECK VALVES FOR HVAC PIPING

PART 1 - GENERAL

1.01 RELATED DOCUMENTS

A. Drawings and general provisions of the Contract, including General and Supplementary Conditions and Division 01 Specification Sections, apply to this Section.

1.02 SUMMARY

A. Section Includes:

1. Bronze lift check valves.
2. Bronze swing check valves.
3. Iron swing check valves.
4. Iron swing check valves with closure control.
5. Iron, grooved-end swing check valves.
6. Iron, center-guided check valves.
7. Iron, plate-type check valves.

1.03 DEFINITIONS

A. CWP: Cold working pressure.

B. EPDM: Ethylene propylene copolymer rubber.

C. NBR: Acrylonitrile-butadiene, Buna-N, or nitrile rubber.

D. SWP: Steam working pressure.

1.04 ACTION SUBMITTALS

A. Product Data: For each type of valve.

1.05 DELIVERY, STORAGE, AND HANDLING

A. Prepare valves for shipping as follows:

1. Protect internal parts against rust and corrosion.
2. Protect threads, flange faces, grooves, and weld ends.

3. Block check valves in either closed or open position.

B. Use the following precautions during storage:

1. Maintain valve end protection.

2. Store valves indoors and maintain at higher than ambient dew point temperature. If outdoor storage is necessary, store valves off the ground in watertight enclosures.

C. Use sling to handle large valves; rig sling to avoid damage to exposed parts. Do not use handwheels or stems as lifting or rigging points.

PART 2 - **PRODUCTS**

2.01 GENERAL REQUIREMENTS FOR VALVES

A. Source Limitations for Valves: Obtain each type of valve from single source from single manufacturer.

B. ASME Compliance:

1. ASME B1.20.1 for threads for threaded-end valves.

2. ASME B16.1 for flanges on iron valves.

3. ASME B16.10 and ASME B16.34 for ferrous valve dimensions and design criteria.

4. ASME B16.18 for solder joint.

5. ASME B31.1 for power piping valves.

6. ASME B31.9 for building services piping valves.

C. AWWA Compliance: Comply with AWWA C606 for grooved-end connections.

D. Bronze valves shall be made with dezincification-resistant materials. Bronze valves made with copper alloy (brass) containing more than 15 percent zinc are not permitted.

E. Valve Pressure-Temperature Ratings: Not less than indicated and as required for system pressures and temperatures.

F. Valve Sizes: Same as upstream piping unless otherwise indicated.

G. Valve Bypass and Drain Connections: MSS SP-45.

2.02 BRONZE LIFT CHECK VALVES

A. Bronze Lift Check Valves with Bronze Disc, Class 125:

1. Manufacturers: Subject to compliance with requirements, provide products by one of the following:

a. Crane; a Crane brand.

b. Jenkins Valves; a Crane Co. brand.

c. Stockham; a Crane Co. brand.

2. Description:

a. Standard: MSS SP-80, Type 1.

b. CWP Rating: 200 psig.

c. Body Design: Vertical flow.

d. Body Material: ASTM B61 or ASTM B62, bronze.

e. Ends: Threaded.

f. Disc: Bronze.

2.03 BRONZE SWING CHECK VALVES

A. Bronze Swing Check Valves with Bronze Disc, Class 125:

1. Manufacturers: Subject to compliance with requirements, provide products by one of the following:

a. American Valve, Inc.

b. Apollo Valves; a part of Aalberts Integrated Piping Systems.

c. Crane; a Crane brand.

d. Hammond Valve.

e. Jenkins Valves; a Crane Co. brand.

f. Jomar Valve.

g. KITZ Corporation.

h. Macomb Groups (The).

i. Milwaukee Valve Company.

j. NIBCO INC.

k. Powell Valves.

l. Red-White Valve Corp.

m. Stockham; a Crane Co. brand.

n. WATTS.

2. Description:

a. Standard: MSS SP-80, Type 3.

b. CWP Rating: 200 psig.

c. Body Design: Horizontal flow.

d. Body Material: ASTM B62, bronze.

e. Ends: Threaded.

f. Disc: Bronze.

B. Bronze Swing Check Valves with Bronze Disc, Class 150:

1. Manufacturers: Subject to compliance with requirements, provide products by one of the following:

a. American Valve, Inc.

b. Apollo Valves; a part of Aalberts Integrated Piping Systems.

c. Crane; a Crane brand.

d. Jenkins Valves; a Crane Co. brand.

e. KITZ Corporation.

f. Macomb Groups (The).

g. Milwaukee Valve Company.

h. NIBCO INC.

i. Red-White Valve Corp.

j. Stockham; a Crane Co. brand.

2. Description:

a. Standard: MSS SP-80, Type 3.

b. CWP Rating: 300 psig.

c. Body Design: Horizontal flow.

d. Body Material: ASTM B62, bronze.

e. Ends: Threaded.

f. Disc: Bronze.

2.04 IRON SWING CHECK VALVES

A. Iron Swing Check Valves with Metal Seats, Class 125:

1. Manufacturers: Subject to compliance with requirements, provide products by one of the following:

a. Apollo Valves; a part of Aalberts Integrated Piping Systems.

b. Crane; a Crane brand.

c. Hammond Valve.

d. Jenkins Valves; a Crane Co. brand.

e. KITZ Corporation.

f. Legend Valve & Fitting, Inc.

g. Macomb Groups (The).

h. Milwaukee Valve Company.

i. NIBCO INC.

j. Powell Valves.

k. Red-White Valve Corp.

l. Stockham; a Crane Co. brand.

m. Sure Flow Equipment Inc.

n. WATTS.

2. Description:

a. Standard: MSS SP-71, Type I.

b. NPS 2-1/2 to NPS 12, CWP Rating: 200 psig.

c. NPS 14 to NPS 24, CWP Rating: 150 psig.

d. Body Design: Clear or full waterway.

e. Body Material: ASTM A126, gray iron with bolted bonnet.

f. Ends: Flanged.

g. Trim: Bronze.

h. Gasket: Asbestos free.

B. Iron Swing Check Valves with Nonmetallic-to-Metal Seats, Class 125:

1. Manufacturers: Subject to compliance with requirements, provide products by one of the following:

a. Crane; a Crane brand.

b. Stockham; a Crane Co. brand.

2. Description:

a. Standard: MSS SP-71, Type I.

b. NPS 2-1/2 to NPS 12, CWP Rating: 200 psig.

c. NPS 14 to NPS 24, CWP Rating: 150 psig.

d. Body Design: Clear or full waterway.

e. Body Material: ASTM A126, gray iron with bolted bonnet.

f. Ends: Flanged.

g. Trim: Composition.

h. Seat Ring: Bronze.

i. Disc Holder: Bronze.

j. Disc: PTFE.

k. Gasket: Asbestos free.

C. Iron Swing Check Valves with Metal Seats, Class 250:

1. Manufacturers: Subject to compliance with requirements, provide products by one of the following:

a. Apollo Valves; a part of Aalberts Integrated Piping Systems.

b. Crane; a Crane brand.

c. Hammond Valve.

d. Jenkins Valves; a Crane Co. brand.

e. Milwaukee Valve Company.

f. NIBCO INC.

g. Stockham; a Crane Co. brand.

h. WATTS.

2. Description:

a. Standard: MSS SP-71, Type I.

b. NPS 2-1/2 to NPS 12, CWP Rating: 500 psig.

c. NPS 14 to NPS 24, CWP Rating: 300 psig.

d. Body Design: Clear or full waterway.

e. Body Material: ASTM A126, gray iron with bolted bonnet.

f. Ends: Flanged.

g. Trim: Bronze.

h. Gasket: Asbestos free.

PART 3 - EXECUTION

3.01 EXAMINATION

A. Examine valve interior for cleanliness, freedom from foreign matter, and corrosion. Remove special packing materials, such as blocks, used to prevent disc movement during shipping and handling.

B. Operate valves in positions from fully open to fully closed. Examine guides and seats made accessible by such operations.

C. Examine threads on valve and mating pipe for form and cleanliness.

D. Examine mating flange faces for conditions that might cause leakage. Check bolting for proper size, length, and material. Verify that gasket is of proper size, that its material composition is suitable for service, and that it is free from defects and damage.

E. Do not attempt to repair defective valves; replace with new valves.

3.02 VALVE INSTALLATION

A. Install valves with unions or flanges at each piece of equipment arranged to allow service, maintenance, and equipment removal without system shutdown.

B. Locate valves for easy access and provide separate support where necessary.

C. Install valves in horizontal piping with stem at or above center of pipe.

D. Install valves in position to allow full stem movement.

E. Install check valves for proper direction of flow and as follows:

1. Swing Check Valves: In horizontal position with hinge pin level.

2. Center-Guided and Plate-Type Check Valves: In horizontal or vertical position, between flanges.

3. Lift Check Valves: With stem upright and plumb.

F. Install valve tags. Comply with requirements for valve tags and schedules in Section 230553 "Identification for HVAC Piping and Equipment."

3.03 ADJUSTING

A. Adjust or replace valve packing after piping systems have been tested and put into service but before final adjusting and balancing. Replace valves if persistent leaking occurs.

3.04 GENERAL REQUIREMENTS FOR VALVE APPLICATIONS

A. If valve applications are not indicated, use the following:

1. Pump-Discharge Check Valves:

a. NPS 2 and Smaller: Bronze swing check valves with bronze disc.

b. NPS 2-1/2 and Larger: Iron swing check valves with lever and weight or with spring or iron, center-guided, metal-seat check valves.

B. If valves with specified SWP classes or CWP ratings are unavailable, the same types of valves with higher SWP classes or CWP ratings may be substituted.

C. Select valves, except wafer types, with the following end connections:

1. For Copper Tubing, NPS 2 and Smaller: Threaded ends except where solder-joint valve-end option is indicated in valve schedules.

2. For Copper Tubing, NPS 2-1/2 to NPS 4: Flanged ends except where threaded valve-end option is indicated in valve schedules.

3. For Copper Tubing, NPS 5 and Larger: Flanged ends.

4. For Steel Piping, NPS 2 and Smaller: Threaded ends.

5. For Steel Piping, NPS 2-1/2 to NPS 4: Flanged ends except where threaded valve-end option is indicated in valve schedules.

6. For Steel Piping, NPS 5 and Larger: Flanged ends.

7. For Grooved-End Copper Tubing and Steel Piping except Steam and Steam Condensate Piping: Valve ends may be grooved.

3.05 CHILLED-WATER VALVE SCHEDULE

A. Pipe NPS 2 and Smaller:

1. Bronze Valves: May be provided with solder-joint ends instead of threaded ends.

2. Bronze swing check valves with bronze disc, Class 125.

B. Pipe NPS 2-1/2 and Larger:

1. NPS 2-1/2 to NPS 4: Iron valves may be provided with threaded ends instead of flanged ends.

2. NPS 2-1/2 to NPS 12: Iron swing check valves with lever and spring closure control, Class 125.

3. NPS 3 to NPS 12: Iron, grooved-end swing check valves, 300 CWP.

4. Iron swing check valves with metal seats, Class 125.

5. Iron, globe, center-guided check valves metal seat, Class 125.

6. Iron, single-plate check valves with resilient seat, Class 125.

END OF SECTION

23 05 29

HANGERS AND SUPPORTS FOR HVAC PIPING AND EQUIPMENT

PART 1 - GENERAL

1.01 RELATED DOCUMENTS

A. Drawings and general provisions of the Contract, including General and Supplementary Conditions and Division 01 Specification Sections, apply to this Section.

1.02 SUMMARY

A. Section Includes:

1. Metal pipe hangers and supports.
2. Trapeze pipe hangers.
3. Fiberglass pipe hangers.
4. Metal framing systems.
5. Fiberglass strut systems.
6. Thermal-hanger shield inserts.
7. Fastener systems.
8. Pipe stands.
9. Equipment stands.
10. Equipment supports.

B. Related Requirements:

1. Section 055000 "Metal Fabrications" for structural-steel shapes and plates for trapeze hangers for pipe and equipment supports.
2. Section 230516 "Expansion Fittings and Loops for HVAC Piping" for pipe guides and anchors.
3. Section 230548.13 "Vibration Controls for HVAC" for vibration isolation devices.
4. Section 233113 "Metal Ducts" for duct hangers and supports.

1.03 ACTION SUBMITTALS

A. Product Data: For each type of product.

B. Sustainable Design Submittals:

C. Shop Drawings: Show fabrication and installation details and include calculations for the following; include Product Data for components:

1. Trapeze pipe hangers.

2. Metal framing systems.

3. Fiberglass strut systems.

4. Pipe stands.

5. Equipment supports.

D. Delegated-Design Submittal: For trapeze hangers indicated to comply with performance requirements and design criteria, including analysis data signed and sealed by the qualified professional engineer responsible for their preparation.

1. Detail fabrication and assembly of trapeze hangers.

2. Include design calculations for designing trapeze hangers.

1.04 INFORMATIONAL SUBMITTALS

A. Welding certificates.

1.05 QUALITY ASSURANCE

A. Structural-Steel Welding Qualifications: Qualify procedures and personnel according to AWS D1.1/D1.1M, "Structural Welding Code - Steel."

B. Pipe Welding Qualifications: Qualify procedures and operators according to ASME Boiler and Pressure Vessel Code, Section IX.

PART 2 - PRODUCTS

2.01 PERFORMANCE REQUIREMENTS

A. Delegated Design: Engage a qualified professional engineer, as defined in Section 014000 "Quality Requirements," to design trapeze pipe hangers and equipment supports.

B. Structural Performance: Hangers and supports for HVAC piping and equipment shall withstand the effects of gravity loads and stresses within limits and under conditions indicated according to ASCE/SEI 7.

1. Design supports for multiple pipes, including pipe stands, capable of supporting combined weight of supported systems, system contents, and test water.

2. Design equipment supports capable of supporting combined operating weight of supported equipment and connected systems and components.

3. Design seismic-restraint hangers and supports for piping and equipment.

2.02 METAL PIPE HANGERS AND SUPPORTS

A. Carbon-Steel Pipe Hangers and Supports:

1. Description: MSS SP-58, Types 1 through 58, factory-fabricated components.

2. Galvanized Metallic Coatings: Pregalvanized, hot-dip galvanized, or electro-galvanized.

3. Nonmetallic Coatings: Plastic coated, or epoxy powder-coated.

4. Padded Hangers: Hanger with fiberglass or other pipe insulation pad or cushion to support bearing surface of piping.

5. Hanger Rods: Continuous-thread rod, nuts, and washer made of stainless steel.

B. Stainless Steel Pipe Hangers and Supports:

1. Description: MSS SP-58, Types 1 through 58, factory-fabricated components.

2. Padded Hangers: Hanger with fiberglass or other pipe insulation pad or cushion to support bearing surface of piping.

3. Hanger Rods: Continuous-thread rod, nuts, and washer made of stainless steel.

C. Copper Pipe and Tube Hangers:

1. Description: MSS SP-58, Types 1 through 58, copper-plated steel, factory-fabricated components.

2. Hanger Rods: Continuous-thread rod, nuts, and washer made of stainless steel.

2.03 TRAPEZE PIPE HANGERS

A. Description: MSS SP-58, Type 59, shop- or field-fabricated pipe-support assembly made from structural carbon-steel shapes with MSS SP-58 carbon-steel hanger rods, nuts, saddles, and U-bolts.

2.04 FIBERGLASS PIPE HANGERS

A. Clevis-Type, Fiberglass Pipe Hangers:

1. Description: Similar to MSS SP-58, Type 1, factory-fabricated steel pipe hanger except hanger is made of fiberglass or fiberglass-reinforced resin.

2. Hanger Rods: Continuous-thread rod, washer, and nuts made of polyurethane or stainless steel.

3. Flammability: ASTM D635, ASTM E84, and UL 94.

B. Strap-Type, Fiberglass Pipe Hangers:

1. Description: Similar to MSS SP-58, Type 9 or Type 10, steel pipe hanger except hanger is made of fiberglass-reinforced resin.

   a. Flammability: ASTM D635, ASTM E84, and UL 94.

2. Hanger Rod and Fittings: Continuous-thread rod, washer, and nuts made of stainless steel.

2.05 PLASTIC PIPE HANGERS

A. Description: Similar to MSS SP-58, Types 1 through 58, factory-fabricated steel pipe hanger except hanger is made of plastic.

B. Hanger Rods: Continuous-thread rod, nuts, and washer made of stainless steel.

C. Flammability: ASTM D635, ASTM E84, and UL 94.

2.06 METAL FRAMING SYSTEMS

A. MFMA Manufacturer Metal Framing Systems:

1. Manufacturers: Subject to compliance with requirements, provide products by one of the following:

   a. ABB, Electrification Products Division.

   b. B-line; Eaton, Electrical Sector.

   c. Flex-Strut Inc.

   d. G-Strut.

   e. Haydon Corporation.

   f. MIRO Industries.

   g. Unistrut; Atkore International.

   h. Wesanco, Inc.

2. Description: Shop- or field-fabricated, pipe-support assembly made of steel channels, accessories, fittings, and other components for supporting multiple parallel pipes.

3. Standard: Comply with MFMA-4 factory-fabricated components for field assembly.

4. Channels: Continuous slotted stainless steel, Type 304 channel with inturned lips.

5. Channel Width: Selected for applicable load criteria.

6. Channel Nuts: Formed or stamped nuts or other devices designed to fit into channel slot and, when tightened, prevent slipping along channel.

7. Hanger Rods: Continuous-thread rod, nuts, and washer made of stainless steel.

8. Metallic Coating: Pregalvanized G90.

9. Paint Coating: Green epoxy, acrylic, or urethane.

10. Plastic Coating: PVC.

B. Non-MFMA Manufacturer Metal Framing Systems:

1. Manufacturers: Subject to compliance with requirements, provide products by one of the following:

a. Anvil International.

b. CADDY; nVent.

c. Carpenter & Paterson, Inc.

d. Empire Industries, Inc.

e. Gripple Inc.

f. MIRO Industries.

g. PHD Manufacturing, Inc.

h. RectorSeal HVAC; a CSW Industrials Company.

i. Rooftop Support Systems, a division of Eberl Iron Works, Inc.

2. Description: Shop- or field-fabricated, pipe-support assembly made of steel channels, accessories, fittings, and other components for supporting multiple parallel pipes.

3. Standard: Comply with MFMA-4 factory-fabricated components for field assembly.

4. Channels: Continuous slotted stainless steel channel with inturned lips.

5. Channel Width: Select for applicable load criteria.

6. Channel Nuts: Formed or stamped nuts or other devices designed to fit into channel slot and, when tightened, prevent slipping along channel.

7. Hanger Rods: Continuous-thread rod, nuts, and washer made of stainless steel.

8. Metallic Coating: Pregalvanized G90.

9. Paint Coating: Green epoxy, acrylic, or urethane.

10. Plastic Coating: PVC.

2.07 FIBERGLASS STRUT SYSTEMS

A. Manufacturers: Subject to compliance with requirements, provide products by one of the following:

1. Champion Fiberglass, Inc.
2. Fabco Plastics Wholesale Limited.
3. G-Strut.
4. Seasafe, Inc.; AMICO, a Gibraltar Industries Company.
5. Unistrut; Atkore International.

B. Description: Structural-grade, factory-formed, glass-fiber-resin channels and angles for supporting multiple parallel pipes.

1. Standard: Comply with MFMA-4 factory-fabricated components for field assembly.
2. Channels: Continuous slotted fiberglass-reinforced plastic channel with inturned lips.
3. Channel Width: Selected for applicable load criteria.
4. Fittings and Accessories: Products provided by channel and angle manufacturer and designed for use with those items.
5. Fitting and Accessory Materials: Same as those for channels and angles, except metal items may be stainless steel.
6. Rated Strength: Selected to suit applicable load criteria.
7. Protect finishes on exposed surfaces from damage by applying a strippable, temporary protective covering before shipping.

2.08 THERMAL-HANGER SHIELD INSERTS

A. Manufacturers: Subject to compliance with requirements, provide products by one of the following:

1. Buckaroos, Inc.
2. CADDY; nVent.
3. Carpenter & Paterson, Inc.
4. KB Enterprise.
5. National Pipe Hanger Corporation.

6. Pipe Shields Inc.

7. Piping Technology & Products, Inc.

8. Rilco Manufacturing Co., Inc.

9. Value Engineered Products, Inc.

B. Insulation-Insert Material for Cold Piping: ASTM C552, Type II cellular glass with 100-psi or ASTM C591, Type VI, Grade 1 polyisocyanurate with 125-psi minimum compressive strength and vapor barrier.

C. Insulation-Insert Material for Hot Piping: ASTM C552, Type II cellular glass with 100-psi or ASTM C591, Type VI, Grade 1 polyisocyanurate with 125-psi minimum compressive strength.

D. For Trapeze or Clamped Systems: Insert and shield shall cover entire circumference of pipe.

E. For Clevis or Band Hangers: Insert and shield shall cover lower 180 degrees of pipe.

F. Insert Length: Extend 2 inches beyond sheet metal shield for piping operating below ambient air temperature.

2.09 FASTENER SYSTEMS

A. Powder-Actuated Fasteners: Threaded-steel stud, for use in hardened portland cement concrete with pull-out, tension, and shear capacities appropriate for supported loads and building materials where used.

1. Manufacturers: Subject to compliance with requirements, provide products by one of the following:

a. Hilti, Inc.

b. ITW Ramset/Red Head; Illinois Tool Works, Inc.

c. MKT Fastening, LLC.

d. Simpson Strong-Tie Co., Inc.

B. Mechanical-Expansion Anchors: Insert-wedge-type anchors for use in hardened portland cement concrete; with pull-out, tension, and shear capacities appropriate for supported loads and building materials where used.

1. Manufacturers: Subject to compliance with requirements, provide products by one of the following:

a. B-line; Eaton, Electrical Sector.

b. Empire Tool and Manufacturing Co., Inc.

c. Hilti, Inc.

d. ITW Ramset/Red Head; Illinois Tool Works, Inc.

e. MKT Fastening, LLC.

2. Indoor Applications: Zinc-coated or stainless steel.

3. Outdoor Applications: Stainless steel.

2.10 PIPE STANDS

A. General Requirements for Pipe Stands: Shop- or field-fabricated assemblies made of manufactured corrosion-resistant components to support roof-mounted piping.

B. Compact Pipe Stand:

1. Manufacturers: Subject to compliance with requirements, provide products by one of the following:

a. MIRO Industries.

b. PHP Systems/Design.

c. RectorSeal HVAC; a CSW Industrials Company.

d. Rooftop Support Systems, a division of Eberl Iron Works, Inc.

2. Description: Single base unit with integral-rod roller, pipe clamps, or V-shaped cradle to support pipe, for roof installation without membrane penetration.

3. Base: Single, vulcanized rubber, molded polypropylene, or polycarbonate.

4. Hardware: Galvanized steel or polycarbonate.

5. Accessories: Protection pads.

C. Low-Profile, Single Base, Single-Pipe Stand:

1. Manufacturers: Subject to compliance with requirements, provide products by one of the following:

a. MIRO Industries.

b. PHP Systems/Design.

c. Rooftop Support Systems, a division of Eberl Iron Works, Inc.

2. Description: Single base with vertical and horizontal members, and pipe support, for roof installation without membrane protection.

3. Base: Single, vulcanized rubber, molded polypropylene, or polycarbonate.

4. Vertical Members: Two, stainless-steel, continuous-thread 1/2-inch rods.

5. Horizontal Member: Adjustable horizontal, stainless-steel pipe support channels.

6. Pipe Supports: Roller.

7. Hardware: Stainlesssteel.

8. Accessories: Protection pads.

9. Height: 12 inches above roof.

D. High-Profile, Single Base, Single-Pipe Stand:

1. Manufacturers: Subject to compliance with requirements, provide products by one of the following:

   a. MIRO Industries.

   b. PHP Systems/Design.

   c. Rooftop Support Systems, a division of Eberl Iron Works, Inc.

2. Description: Single base, vertical and horizontal members, and pipe support, for roof installation without membrane penetration.

3. Base: Single vulcanized rubber or molded polypropylene.

4. Vertical Members: Two, stainless-steel, continuous-thread 1/2-inch rods.

5. Horizontal Member: One, adjustable height, galvanized- orstainless-steel pipe support slotted channel or plate.

6. Pipe Supports: Roller.

7. Hardware: Stainlesssteel.

8. Accessories: Protection pads, 1/2-inch continuous-thread stainless steel rod.

9. Height: 36 inches above roof.

E. High-Profile, Multiple-Pipe Stand:

1. Manufacturers: Subject to compliance with requirements, provide products by one of the following:

   a. MIRO Industries.

   b. PHP Systems/Design.

   c. RectorSeal HVAC; a CSW Industrials Company.

d. Rooftop Support Systems, a division of Eberl Iron Works, Inc.

2. Description: Assembly of bases, vertical and horizontal members, and pipe supports, for roof installation without membrane penetration.

3. Bases: Two or more; vulcanized rubber.

a.

4. Vertical Members: Two or more, stainless-steel channels.

5. Horizontal Members: One or more, adjustable height, stainless-steel pipe support.

6. Pipe Supports: Roller.

7. Hardware: Stainlesssteel.

8. Accessories: Protection pads, 1/2-inch continuous-thread rod.

9. Height: 36 inches above roof.

F. Curb-Mounted-Type Pipe Stands: Shop- or field-fabricated pipe supports made from structural-steel shapes, continuous-thread rods, and rollers, for mounting on permanent stationary roof curb.

2.11 EQUIPMENT SUPPORTS

A. Description: Welded, shop- or field-fabricated equipment support made from structural carbon-steel shapes.

2.12 OUTDOOR EQUIPMENT STANDS

A. Manufacturers: Subject to compliance with requirements, provide products by one of the following:

1. MIRO Industries.

2. RectorSeal HVAC; a CSW Industrials Company.

3. Rooftop Support Systems, a division of Eberl Iron Works, Inc.

2.13 MATERIALS

A. Aluminum: ASTM B221.

B. Carbon Steel: ASTM A1011/A1011M.

C. Structural Steel: ASTM A36/A36M, carbon-steel plates, shapes, and bars; galvanized.

D. Stainless Steel: ASTM A240/A240M.

E. Threaded Rods: Continuously threaded. Zinc-plated or galvanized steel for indoor applications and stainless steel for outdoor applications. Mating nuts and washers of similar materials as rods.

F. Grout: ASTM C1107/C1107M, factory-mixed and -packaged, dry, hydraulic-cement, nonshrink and nonmetallic grout; suitable for interior and exterior applications.

1. Properties: Nonstaining, noncorrosive, and nongaseous.

2. Design Mix: 5000-psi, 28-day compressive strength.

PART 3 - EXECUTION

3.01 APPLICATION

A. Comply with requirements in Section 078413 "Penetration Firestopping" for firestopping materials and installation for penetrations through fire-rated walls, ceilings, and assemblies.

B. Strength of Support Assemblies: Where not indicated, select sizes of components so strength will be adequate to carry present and future static loads within specified loading limits. Minimum static design load used for strength determination shall be weight of supported components plus 200 lb.

3.02 HANGER AND SUPPORT INSTALLATION

A. Metal Pipe-Hanger Installation: Comply with MSS SP-58. Install hangers, supports, clamps, and attachments as required to properly support piping from the building structure.

B. Metal Trapeze Pipe-Hanger Installation: Comply with MSS SP-58. Arrange for grouping of parallel runs of horizontal piping, and support together on field-fabricated trapeze pipe hangers.

1. Pipes of Various Sizes: Support together and space trapezes for smallest pipe size or install intermediate supports for smaller diameter pipes as specified for individual pipe hangers.

2. Field fabricate from ASTM A36/A36M, carbon-steel shapes selected for loads being supported. Weld steel according to AWS D1.1/D1.1M.

C. Fiberglass Pipe-Hanger Installation: Comply with applicable portions of MSS SP-58. Install hangers and attachments as required to properly support piping from building structure.

D. Metal Framing System Installation: Arrange for grouping of parallel runs of piping, and support together on field-assembled strut systems.

E. Thermal-Hanger Shield Installation: Install in pipe hanger or shield for insulated piping.

F. Fastener System Installation:

1. Install powder-actuated fasteners for use in lightweight concrete or concrete slabs less than 4 inches thick in concrete after concrete is placed and completely cured. Use

operators that are licensed by powder-actuated tool manufacturer. Install fasteners according to powder-actuated tool manufacturer's operating manual.

2. Install mechanical-expansion anchors in concrete after concrete is placed and completely cured. Install fasteners according to manufacturer's written instructions.

G. Pipe Stand Installation:

1. Pipe Stand Types except Curb-Mounted Type: Assemble components and mount on smooth roof surface. Do not penetrate roof membrane.

2. Curb-Mounted-Type Pipe Stands: Assemble components or fabricate pipe stand and mount on permanent, stationary roof curb. See Section 077200 "Roof Accessories" for curbs.

H. Install hangers and supports complete with necessary attachments, inserts, bolts, rods, nuts, washers, and other accessories.

I. Equipment Support Installation: Fabricate from welded-structural-steel shapes.

J. Install hangers and supports to allow controlled thermal and seismic movement of piping systems, to permit freedom of movement between pipe anchors, and to facilitate action of expansion joints, expansion loops, expansion bends, and similar units.

K. Install lateral bracing with pipe hangers and supports to prevent swaying.

L. Install building attachments within concrete slabs or attach to structural steel. Install additional attachments at concentrated loads, including valves, flanges, and strainers, NPS 2-1/2 and larger and at changes in direction of piping. Install concrete inserts before concrete is placed; fasten inserts to forms and install reinforcing bars through openings at top of inserts.

M. Load Distribution: Install hangers and supports so that piping live and dead loads and stresses from movement will not be transmitted to connected equipment.

N. Pipe Slopes: Install hangers and supports to provide indicated pipe slopes and to not exceed maximum pipe deflections allowed by ASME B31.9 for building services piping.

O. Insulated Piping:

1. Attach clamps and spacers to piping.

a. Piping Operating above Ambient Air Temperature: Clamp may project through insulation.

b. Piping Operating below Ambient Air Temperature: Use thermal-hanger shield insert with clamp sized to match OD of insert.

c. Do not exceed pipe stress limits allowed by ASME B31.9 for building services piping.

2. Install MSS SP-58, Type 39, protection saddles if insulation without vapor barrier is indicated. Fill interior voids with insulation that matches adjoining insulation.

   a. Option: Thermal-hanger shield inserts may be used. Include steel weight-distribution plate for pipe NPS 4 and larger if pipe is installed on rollers.

3. Install MSS SP-58, Type 40, protective shields on cold piping with vapor barrier. Shields shall span an arc of 180 degrees.

   a. Option: Thermal-hanger shield inserts may be used. Include steel weight-distribution plate for pipe NPS 4 and larger if pipe is installed on rollers.

4. Shield Dimensions for Pipe: Not less than the following:

   a. NPS 1/4 to NPS 3-1/2: 12 inches long and 0.048 inch thick.

   b. NPS 4: 12 inches long and 0.06 inch thick.

   c. NPS 5 and NPS 6: 18 inches long and 0.06 inch thick.

   d. NPS 8 to NPS 14: 24 inches long and 0.075 inch thick.

   e. NPS 16 to NPS 24: 24 inches long and 0.105 inch thick.

5. Pipes NPS 8 and Larger: Include wood or reinforced calcium-silicate-insulation inserts of length at least as long as protective shield.

6. Thermal-Hanger Shields: Install with insulation same thickness as piping insulation.

3.03 EQUIPMENT SUPPORTS

A. Fabricate structural-steel stands to suspend equipment from structure overhead or to support equipment above floor.

B. Grouting: Place grout under supports for equipment and make bearing surface smooth.

C. Provide lateral bracing, to prevent swaying, for equipment supports.

3.04 METAL FABRICATIONS

A. Cut, drill, and fit miscellaneous metal fabrications for trapeze pipe hangers and equipment supports.

B. Fit exposed connections together to form hairline joints. Field weld connections that cannot be shop welded because of shipping size limitations.

C. Field Welding: Comply with AWS D1.1/D1.1M procedures for shielded, metal arc welding; appearance and quality of welds; and methods used in correcting welding work; and with the following:

1. Use materials and methods that minimize distortion and develop strength and corrosion resistance of base metals.

2. Obtain fusion without undercut or overlap.

3. Remove welding flux immediately.

4. Finish welds at exposed connections so no roughness shows after finishing and so contours of welded surfaces match adjacent contours.

3.05 ADJUSTING

A. Hanger Adjustments: Adjust hangers to distribute loads equally on attachments and to achieve indicated slope of pipe.

B. Trim excess length of continuous-thread hanger and support rods to 1-1/2 inches Insert dimension.

3.06 PAINTING

A. Touchup: Clean field welds and abraded areas of shop paint. Paint exposed areas immediately after erecting hangers and supports. Use same materials as used for shop painting. Comply with SSPC-PA 1 requirements for touching up field-painted surfaces.

1. Apply paint by brush or spray to provide a minimum dry film thickness of 2.0 mils.

B. Touchup: Comply with requirements in Section 099113 "Exterior Painting" and for cleaning and touchup painting of field welds, bolted connections, and abraded areas of shop paint on miscellaneous metal.

C. Galvanized Surfaces: Clean welds, bolted connections, and abraded areas and apply galvanizing-repair paint to comply with ASTM A780/A780M.

3.07 HANGER AND SUPPORT SCHEDULE

A. Specific hanger and support requirements are in Sections specifying piping systems and equipment.

B. Comply with MSS SP-58 for pipe-hanger selections and applications that are not specified in piping system Sections.

C. Use hangers and supports with galvanized metallic coatings for piping and equipment that will not have field-applied finish.

D. Use nonmetallic coatings on attachments for electrolytic protection where attachments are in direct contact with copper tubing.

E. Use carbon-steel pipe hangers and supports and metal framing systems and attachments for general service applications.

F. Use stainless steel pipe hangers and stainless steel attachments for hostile environment applications.

G. Use copper-plated pipe hangers and copper attachments for copper piping and tubing.

H. Use padded hangers for piping that is subject to scratching.

I. Use thermal-hanger shield inserts for insulated piping and tubing.

J. Horizontal-Piping Hangers and Supports: Unless otherwise indicated and except as specified in piping system Sections, install the following types:

1. Adjustable, Steel Clevis Hangers (MSS Type 1): For suspension of noninsulated or insulated, stationary pipes NPS 1/2 to NPS 30.

2. Yoke-Type Pipe Clamps (MSS Type 2): For suspension of up to 1050 deg F, pipes NPS 4 to NPS 24, requiring up to 4 inches of insulation.

3. Carbon- or Alloy-Steel, Double-Bolt Pipe Clamps (MSS Type 3): For suspension of pipes NPS 3/4 to NPS 36, requiring clamp flexibility and up to 4 inches of insulation.

4. Steel Pipe Clamps (MSS Type 4): For suspension of cold and hot pipes NPS 1/2 to NPS 24 if little or no insulation is required.

5. Pipe Hangers (MSS Type 5): For suspension of pipes NPS 1/2 to NPS 4, to allow off-center closure for hanger installation before pipe erection.

6. Adjustable, Swivel Split- or Solid-Ring Hangers (MSS Type 6): For suspension of noninsulated, stationary pipes NPS 3/4 to NPS 8.

7. Adjustable, Steel Band Hangers (MSS Type 7): For suspension of noninsulated, stationary pipes NPS 1/2 to NPS 8.

8. Adjustable Band Hangers (MSS Type 9): For suspension of noninsulated, stationary pipes NPS 1/2 to NPS 8.

9. Adjustable, Swivel-Ring Band Hangers (MSS Type 10): For suspension of noninsulated, stationary pipes NPS 1/2 to NPS 8.

10. Split Pipe Ring with or without Turnbuckle Hangers (MSS Type 11): For suspension of noninsulated, stationary pipes NPS 3/8 to NPS 8.

11. Extension Hinged or Two-Bolt Split Pipe Clamps (MSS Type 12): For suspension of noninsulated, stationary pipes NPS 3/8 to NPS 3.

12. U-Bolts (MSS Type 24): For support of heavy pipes NPS 1/2 to NPS 30.

13. Clips (MSS Type 26): For support of insulated pipes not subject to expansion or contraction.

14. Pipe Saddle Supports (MSS Type 36): For support of pipes NPS 4 to NPS 36, with steel-pipe base stanchion support and cast-iron floor flange or carbon-steel plate.

15. Pipe Stanchion Saddles (MSS Type 37): For support of pipes NPS 4 to NPS 36, with steel-pipe base stanchion support and cast-iron floor flange or carbon-steel plate, and with U-bolt to retain pipe.

16. Adjustable Pipe Saddle Supports (MSS Type 38): For stanchion-type support for pipes NPS 2-1/2 to NPS 36 if vertical adjustment is required, with steel-pipe base stanchion support and cast-iron floor flange.

17. Single-Pipe Rolls (MSS Type 41): For suspension of pipes NPS 1 to NPS 30, from two rods if longitudinal movement caused by expansion and contraction might occur.

18. Adjustable Roller Hangers (MSS Type 43): For suspension of pipes NPS 2-1/2 to NPS 24, from single rod if horizontal movement caused by expansion and contraction might occur.

19. Complete Pipe Rolls (MSS Type 44): For support of pipes NPS 2 to NPS 42 if longitudinal movement caused by expansion and contraction might occur but vertical adjustment is unnecessary.

20. Pipe Roll and Plate Units (MSS Type 45): For support of pipes NPS 2 to NPS 24 if small horizontal movement caused by expansion and contraction might occur and vertical adjustment is unnecessary.

21. Adjustable Pipe Roll and Base Units (MSS Type 46): For support of pipes NPS 2 to NPS 30 if vertical and lateral adjustment during installation might be required in addition to expansion and contraction.

K. Vertical-Piping Clamps: Unless otherwise indicated and except as specified in piping system Sections, install the following types:

1. Extension Pipe or Riser Clamps (MSS Type 8): For support of pipe risers NPS 3/4 to NPS 24.

2. Carbon- or Alloy-Steel Riser Clamps (MSS Type 42): For support of pipe risers NPS 3/4 to NPS 24 if longer ends are required for riser clamps.

L. Hanger-Rod Attachments: Unless otherwise indicated and except as specified in piping system Sections, install the following types:

1. Steel Turnbuckles (MSS Type 13): For adjustment up to 6 inches for heavy loads.

2. Steel Clevises (MSS Type 14): For 120 to 450 deg F piping installations.

3. Swivel Turnbuckles (MSS Type 15): For use with MSS Type 11, split pipe rings.

4. Malleable-Iron Sockets (MSS Type 16): For attaching hanger rods to various types of building attachments.

5. Steel Weldless Eye Nuts (MSS Type 17): For 120 to 450 deg F piping installations.

M. Building Attachments: Unless otherwise indicated and except as specified in piping system Sections, install the following types:

1. Steel or Malleable Concrete Inserts (MSS Type 18): For upper attachment to suspend pipe hangers from concrete ceiling.

2. Top-Beam C-Clamps (MSS Type 19): For use under roof installations with bar-joist construction, to attach to top flange of structural shape.

3. Side-Beam or Channel Clamps (MSS Type 20): For attaching to bottom flange of beams, channels, or angles.

4. Center-Beam Clamps (MSS Type 21): For attaching to center of bottom flange of beams.

5. Welded Beam Attachments (MSS Type 22): For attaching to bottom of beams if loads are considerable and rod sizes are large.

6. C-Clamps (MSS Type 23): For structural shapes.

7. Top-Beam Clamps (MSS Type 25): For top of beams if hanger rod is required tangent to flange edge.

8. Side-Beam Clamps (MSS Type 27): For bottom of steel I-beams.

9. Steel-Beam Clamps with Eye Nuts (MSS Type 28): For attaching to bottom of steel I-beams for heavy loads.

10. Linked-Steel Clamps with Eye Nuts (MSS Type 29): For attaching to bottom of steel I-beams for heavy loads, with link extensions.

11. Malleable-Beam Clamps with Extension Pieces (MSS Type 30): For attaching to structural steel.

12. Welded-Steel Brackets: For support of pipes from below or for suspending from above by using clip and rod. Use one of the following for indicated loads:

    a. Light (MSS Type 31): 750 lb.

    b. Medium (MSS Type 32): 1500 lb.

    c. Heavy (MSS Type 33): 3000 lb.

13. Side-Beam Brackets (MSS Type 34): For sides of steel or wooden beams.

14. Plate Lugs (MSS Type 57): For attaching to steel beams if flexibility at beam is required.

15. Horizontal Travelers (MSS Type 58): For supporting piping systems subject to linear horizontal movement where headroom is limited.

N. Saddles and Shields: Unless otherwise indicated and except as specified in piping system Sections, install the following types:

1. Steel-Pipe-Covering Protection Saddles (MSS Type 39): To fill interior voids with insulation that matches adjoining insulation.

2. Protection Shields (MSS Type 40): Of length recommended in writing by manufacturer to prevent crushing insulation.

3. Thermal-Hanger Shield Inserts: For supporting insulated pipe.

O. Spring Hangers and Supports: Unless otherwise indicated and except as specified in piping system Sections, install the following types:

1. Restraint-Control Devices (MSS Type 47): Where indicated to control piping movement.

2. Spring Cushions (MSS Type 48): For light loads if vertical movement does not exceed 1-1/4 inches.

3. Spring-Cushion Roll Hangers (MSS Type 49): For equipping Type 41, roll hanger with springs.

4. Spring Sway Braces (MSS Type 50): To retard sway, shock, vibration, or thermal expansion in piping systems.

5. Variable-Spring Hangers (MSS Type 51): Preset to indicated load and limit variability factor to 25 percent to allow expansion and contraction of piping system from hanger.

6. Variable-Spring Base Supports (MSS Type 52): Preset to indicated load and limit variability factor to 25 percent to allow expansion and contraction of piping system from base support.

7. Variable-Spring Trapeze Hangers (MSS Type 53): Preset to indicated load and limit variability factor to 25 percent to allow expansion and contraction of piping system from trapeze support.

8. Constant Supports: For critical piping stress and if necessary to avoid transfer of stress from one support to another support, critical terminal, or connected equipment. Include auxiliary stops for erection, hydrostatic test, and load-adjustment capability. These supports include the following types:

   a. Horizontal (MSS Type 54): Mounted horizontally.

   b. Vertical (MSS Type 55): Mounted vertically.

   c. Trapeze (MSS Type 56): Two vertical-type supports and one trapeze member.

P. Comply with MSS SP-58 for trapeze pipe-hanger selections and applications that are not specified in piping system Sections.

Q. Comply with MFMA-103 for metal framing system selections and applications that are not specified in piping system Sections.

R. Use powder-actuated fasteners or mechanical-expansion anchors instead of building attachments where required in concrete construction.

END OF SECTION

23 05 48

VIBRATION ISOLATION

PART 1 - GENERAL

1.01 SECTION INCLUDES

A. Furnish and install vibration isolators for rotary, dynamic, or reciprocating equipment or components; include:

1. Inertia bases

2. Vibration isolation

1.02 RELATED SECTIONS:

A. Section 013300 Submittals.

B. Section 01524 Construction Waste Management

C. Section 01352 LEED Requirements

D. Section 01611 Environmental Management

E. Section 01570 Pollution Prevention and Control

1.03 REFERENCES

A. ASHRAE – Guide to average Noise Criteria Curves

B. Local codes and ordinances

C. Special conditions

1.04 SUBMITTALS

A. Indicate isolation base dimensions.

B. Indicate vibration isolator locations, with static and dynamic load.

C. Include calculation required to certify compliance with specified requirements.

D. Submit manufacturer’s certificate that isolators are properly installed and properly adjusted to meet or exceed specified requirements.

E. Product data. Unless otherwise indicated, submit the following for each type of product provided under work of this Section:

1. Recycled Content:

a. Indicate recycled content; indicate percentage of pre-consumer and post-consumer recycled content per unit of product.

2. Local/Regional Materials:

a. Indicate location of manufacturing facility; indicate distance between manufacturing facility and the project site.

b. Indicate location of extraction, harvesting, and recovery; indicate distance between extraction, harvesting, and recovery and the project site.

3. VOC data:

a. Submit manufacturer's product data for joint compounds. Indicate VOC and chemical component limits of the product. Submit MSDS highlighting VOC and chemical component limits. VOC contents and chemical component limits must be less than the limits of Green Seal’s Standard GS-11.

b. Submit manufacturer’s certification that products comply with Green Seal’s Standard GS-11

c. Submit environmental data in accordance with Table 1 of ASTM E2129 for products provided under work of this Section.

4. Submit the following according to Conditions of the Construction Contract.

a. Product data. Unless otherwise indicated, submit the following for each type of product provided under work of this Section:

5. General: Submit additional LEED submittal requirements included in other sections of the Specifications.

6. LEED submittals are in addition to other submittals. If submitted item is identical to that submitted to comply with other requirements, submit duplicate copies as a separate submittal to verify compliance with indicated LEED requirements.

1.05 QUALITY ASSURANCE

A. Maintain ASHRAE criteria for average noise criteria curves for all equipment at full load condition.

B. Provide vibration isolation devices, including auxiliary steel bases and pouring forms, from a single manufacturer or supplier who will be responsible for complete coordination of all phase of this work.

1.06 INTENT OF RESPONSIBILITY

A. It is the intent of this specification to provide for vibration isolation supports for all equipment, piping, and ductwork as set out below. The transmission of perceptible vibration, structural borne noise, or objectionable air borne noise to occupied areas by equipment installed under this contract will not be permitted. The Contractor shall be held responsible for installing the vibration isolators as specified herein or shown on the drawings or otherwise required to prevent the transmission of vibration which would create objectionable noise levels in occupied areas. The isolation supplier must be a firm capable of dealing effectively with vibration and noise characteristics effects and criteria, and one which can provide facilities and capabilities for measuring and evaluating the aforementioned disturbances.

A. All vibration isolation devices, including auxiliary steel bases and pouring forms, shall be designed and furnished by a single manufacturer or supplier who will be responsible for adequate coordination of all phases of this work. Concrete housekeeping pads and inertia bases shall be included as part of mechanical work. Pads under electrical gear shall be included as part of electrical work. The concrete work shall meet the requirements specified in the General Contract Specifications.

B. The Contractor shall furnish complete submittal data, including Shop Drawings, which shall indicate the size, type, and deflection of each isolator; and the supported weight, disturbing frequency, and efficiency of each isolator proposed; and any other information as may be required for the Architects and Engineers to check the isolator selection for compliance with the specification. All steel bases and concrete inertia bases shall be completely detailed, and shall show completely any reinforcing steel that may be required to provide a rigid base for the isolated equipment. Further, the submittal data shall indicate, clearly, outlined procedures for installing and adjusting the isolators and bases mentioned above.

C. The vibration isolation manufacturer, or his qualified representative, shall be responsible for providing such supervision as may be required to assure correct and complete installation and adjustment of the isolators. Upon completion of the installation and after the system is put into operation and before acceptance by the Owner, the isolation manufacturer or his qualified representative, in company with the Architect or his designated representative, shall make a final inspection and submit his report to the Architects and Engineers, in writing, certifying the correctness of the installation and compliance with approved submittal data. Any discrepancies or maladjustments found shall be so noted in the report. Should any noise or vibration be objectionable to the Owner, Architect or Engineer, a field instrumentation test and measurement must be made to determine the source, cause, and path of any such disturbance. Any variation or noncompliance with these specification requirements is to be corrected by the installing contractor in an approved manner.

D. Vibration isolation devices shall be as manufactured by Amber/Booth Company, Consolidated Kinetics, Korfund Dynamics Corporation, or approved equal.

PART 2 - PRODUCTS

2.01 ENVIRONMENTALLY PREFERABLE PRODUCTS

A. Provide environmentally preferable products to the greatest extent possible.

1. To the greatest extent possible, provide products and materials that promote stewardship of the earth's resources, promote good indoor environmental quality (IEQ), and promote efficiencies in operational performance.

B. Provide products listed on the EPA Comprehensive Procurement Guidelines to the greatest extent practicable.

C. Provide products listed on the USGBC Directory of Products and Services to the greatest extent possible.

2.02 RECYCLED CONTENT

A. Provide recycled content products to the greatest extent possible.

1. To the greatest extent possible, provide materials with recycled content such that the sum of post-consumer recycled content plus one-half of the post-industrial content constitutes at least 10% of the total value of the materials in the project.

2.03 REGIONAL MATERIALS

A. Provide Regional materials and products to the greatest extent possible that are extracted and manufactured within the region.

1. Provide materials and products that use a minimum of 20 % of building products that are manufactured regionally within a radius of 500 miles from the project site.

a. Manufacturing refers to the final assembly of components into the building product that is furnished and installed by the tradesman.

2. Of the regionally manufactured materials used and documented, use a minimum of 50% of building materials and products that are extracted, harvested or recovered (as well as manufactured) within 500 miles of the project site.

2.04 MANUFACTURERS

A. Amber-Booth Company

A. Mason Industries, Inc.

B. Noise Control, Inc.

2.05 GENERAL DESIGN FEATURES

A. Provide vibration isolation for all mechanical equipment. Provide inertia bases for all equipment mounted on upper floors.

A. All vibration isolators and bases furnished by the Contractor shall be designed for and treated for resistance to corrosion.

B. Steel components shall be PVC coated or phosphated and painted with industrial grade enamel. All nuts, bolts and washers shall be zinc-electroplated or cad-plated. Structural bases shall be thoroughly cleaned of welding slag and primed with zinc-chromate or metal etching primer. A finish coat of industrial grade enamel shall be applied over the primer.

C. All isolators exposed to the weather shall have steel parts PVC coated, hot-dip galvanized or zinc-electroplated plus coating of Neoprene or Bitumastic paint. Aluminum components for outdoor installation shall be etched and painted with industrial grade enamel.

D. Required spring deflections for isolators supporting various items of equipment are shown on the Drawings or tabulated elsewhere in these specifications, but in no case shall be less than one inch. The springs shall be capable of 30% over-travel before becoming solid.

E. Where height-saving brackets for side mounting of isolators are required, the height-saving brackets shall be designed to provide for an operating clearance of 2" under the isolated structure, and designed so that the isolators can be installed and removed when the operating clearance is 2" or less. When used with spring isolators having a deflection of 2-1/2" or more, the height-saving brackets shall be of the pre-compression type to limit exposed bolt length between the top of the isolator and the underneath side of the bracket.

F. All isolators supporting a given piece of equipment shall limit the length of the exposed adjustment bolt between the top and base to a maximum range of 1" to 2".

G. All isolators supporting a given piece of equipment shall be selected for approximately equal spring deflection.

H. Isolators for equipment installed out-of-doors shall be designed to provide adequate restraint due to normal wind conditions and to withstand wind load of 55 PSF (pounds per square foot) applied to any exposed surface of the equipment without failure.

2.06 ISOLATION BASES

A. Type A: Integral structural steel fan and motor base with motor slide rails.

A. Type B: Slung structural steel base with gusseted brackets.

B. Type C: Reinforced 3,000 psi concrete set in full depth perimeter structural steel channel frame, with gusseted brackets and anchor bolts.

C. Type D: Reinforced 3,000 psi concrete base with chamfered edges without channel frame.

2.07 BASE TYPES: BASE TYPES AND REQUIRED DEFLECTIONS ARE SPECIFIED UNDER "SCHEDULE OF ISOLATED EQUIPMENT," PARAGRAPH 7.8, OR ARE INDICATED ON THE DRAWINGS. THE BASES SHALL COMPLY WITH THE FOLLOWING DESCRIPTIONS FOR EACH TYPE REQUIRED ON THE PROJECT.

A. Type B-1 - A structural steel fan and motor base with motor side rails and holes drilled to receive the fan and motor. The steel members shall be adequately sized to prevent distortion and misalignment of the drive, and specifically shall be sized to limit deflection of the beam on the drive side to 0.05" due to starting torque. Snubbers to prevent excessive motion on starting or stopping shall be furnished, if required; however, the snubbers shall not be engaged under steady running conditions.

A. Type B-2 - A concrete inertia base, consisting of a perimeter steel pouring forming, reinforcing bars welded in place, bolting templates, anchor bolts, and height saving brackets for side mounting of the isolators. The perimeter steel members shall be structural channels having a minimum depth of 1/12 of the longest span, but not less than 6" deep. The inertia base for pumps shall be at least equal in weight to the pump with its driving motor and be sized for a minimum overlap of 4" around the base of the equipment. Concrete inertia bases for pumps shall be sized to support the suction elbow of end suction pumps and both the suction and discharge elbows of horizontal split case pumps. The bases shall be T-shaped where necessary to conserve space.

2.08 VIBRATION ISOLATORS

A. Type 1 - An adjustable, free-standing, open-spring mounting with combination leveling bolt and equipment fastening bolt. The spring(s) shall be rigidly attached to the mounting base plate and to the spring compression plate. The isolator shall be designed for a minimum Kx/Ky (horizontal to vertical spring rate) of 1.0. A Neoprene pad having a minimum thickness of 1/4" shall be bonded to the base plate. Base plates shall be sized to limit pad loading to 100 psi.

A. Type 2 - An aluminum-housed, or cast iron housed, adjustable, spring mounting having telescoping top and bottom sections separated by resilient inserts of Neoprene or other suitable material to limit horizontal motion. The inserts shall be permanently lubricated to minimize vertical friction. Sheet or cast iron housings may be used if they are hot-dip galvanized after fabrication. A Neoprene pad having a minimum thickness of 1/4" shall be bonded to the base plate.

B. Type 3 - An elastomeric mounting having steel base plate with mounting holes and a threaded insert at top of the mounting for attaching equipment. All metal parts shall be completely embedded in the elastomeric materials. The elastomer may be Neoprene or high synthetic rubber with anti-ozone and anti-oxidant additives. Mountings shall be designed for approximately 1/4" deflection and loaded so that deflection does not exceed 15% of the free height of the mounting.

C. Type 4 - A pad-type mounting consisting of two layers of 3/8" thick, ribbed or waffled, Neoprene pads bonded to a 16 gauge galvanized steel separator plate. Bolting not required. Pads shall be sized for approximately 20 to 40 psi load, or a deflection of 0.10" to 0.16".

D. Type 5 - A spring hanger consisting of a rectangular steel box, coil springs, spring cups, Neoprene impregnated fabric washer, steel washer, and Neoprene insert designed to prevent metal to metal contact between the hanger rod and bottom of the hanger box. The hanger box shall be capable of supporting a load of 200% of rated load without noticeable deformation or failure.

E. Type 6 - A spring hanger, as described in Type 5, with the addition of an elastomeric element at the top of the box for acoustic isolation. The design shall be such to prevent metal - to metal contact between the hanger rod and the top of the hanger box. The elastomeric element shall meet the design requirements for Type 3 mountings.

F. Type 7 - An elastomeric hanger, consisting of a rectangular steel box and an elastomeric isolation element, which shall be of Neoprene or high quality synthetic rubber with anti-ozone and anti-oxidant additive. The elements shall be so designed for approximately 1/4" deflection and loaded so that deflection does not exceed 15% of the free height of the element. The design shall be such as to prevent metal-to-metal contact between the hanger rod and the steel box.

2.09 FABRICATION

A. Provide pairs of neoprene side snubbers or restraining springs where side torque or thrust may develop.

A. Color code spring mounts.

B. Select spring to operate at two-thirds maximum compression strain, with 1/4 inch ribbed neoprene pads.

C. Type 1 Isolators: Fabricate with cast aluminum or hot-dipped galvanized steel housing with PVC coated steel spring and neoprene pad bonded to base plate.

2.10 VIBRATION ISOLATION ROOF CURBS FOR ROOF MOUNTED UNITS

A. Description: Factory-assembled, fully enclosed, insulated, air- and watertight curb designed to resiliently support roof-mounted equipment and to withstand 125-mph wind impinging laterally against the side of the equipment.

1. Components: Upper support frame; lower support assembly; freestanding, un-housed, laterally stable steel springs; vertical and horizontal restraints.

2. Lower Support Assembly: Provide a means of attachment to the building structure and include a wood nailer stripe for attachment of roof material and 2 inches of rigid insulation on the inside of the assembly.

3. Spring Isolators: As indicated or scheduled. Include adjustment bolt to permit leveling of equipment after installation. Attach to lower assembly with a rubber isolation pad. Locate spring isolators so they are accessible for adjustment at any time during the life of the installation without interfering with the integrity of the roof.

4. Water Seal: Elastomeric seal conforming to UL Class A roofing materials, attached to the upper support frame, extending down past the wood nailer of the lower support assembly, and counter flashed over the roof materials.

PART 3 - EXECUTION

3. 1 INSTALLATION

A. Install vibration isolators for motor driven equipment.

A. Set steel bases for 1 inch clearance between housekeeping pad and base. Set concrete inertia bases for 2 inch clearance. Adjust equipment level.

B. Provide spring isolators on piping connected to isolated equipment as follows:

- Up to 4 inch diameter, first three points of support; five to 8 inch diameter, first four points of support;

- 10 inch diameter and over, first six points of support. Static deflection of first point to be twice deflection of isolated equipment.

C. Provide minimum of four hangers for each fan coil unit and fan powered terminal units. Provide isolators for each hanger.

3. 2 SCHEDULE

Isolated Equipment	Base Type	Isolator Type
Air Handling Units Floor Mounted	B-1	1
Centrifugal Fans Class I & II to 54 inches Class I & II over 60 inches Class III	B-1 B-2 B-2	1 1 1
Chillers (Grade mounted) Roof mounted AHU	Concrete Pad	4
Other than Slab on Grade	B-2	1
Pumps 3 hp & Smaller 5 hp & Over	 B-1 B-2	 7 2
Piping		5
Isolated Equipment	Base Type	Isolator Type
Ductwork		N/A
Fan Powered Terminal Units		6
Fan Coil Units		6

END OF SECTION 23 05 48

23 05 53

IDENTIFICATION FOR HVAC PIPING AND EQUIPMENT

PART 1 - GENERAL

1.01 SUMMARY

A. Section Includes:

1. Equipment labels.

2. Warning signs and labels.

3. Warning tape.

4. Pipe labels.

5. Duct labels.

6. Stencils.

7. Valve tags.

8. Warning tags.

1.02 ACTION SUBMITTALS

A. Product Data: For each type of product.

B. Samples: For color, letter style, and graphic representation required for each identification material and device.

C. Equipment-Label Schedule: Include a listing of all equipment to be labeled with the proposed content for each label.

D. Valve-numbering scheme.

E. Valve Schedules: Provide for each piping system. Include in operation and maintenance manuals.

PART 2 - PRODUCTS

2.01 EQUIPMENT LABELS

A. Metal Labels for Equipment:

1. Manufacturers: Subject to compliance with requirements, provide products by one of the following:

a. Brady Corporation.

b. Brimar Industries, Inc.

c. Carlton Industries, LP.

d. Champion America.

e. Craftmark Pipe Markers.

f. emedco.

g. Kolbi Pipe Marker Co.

h. LEM Products Inc.

i. Marking Services, Inc.

j. Seton Identification Products; a Brady Corporation company.

2. Material and Thickness: aluminum, 0.032-inch minimum thickness, with predrilled or stamped holes for attachment hardware.

3. Letter and Background Color: As indicated for specific application under Part 3.

4. Minimum Label Size: Length and width vary for required label content, but not less than 2-1/2 by 3/4 inch.

5. Minimum Letter Size: 1/4 inch for name of units if viewing distance is less than 24 inches, 1/2 inch for viewing distances of up to 72 inches, and proportionately larger lettering for greater viewing distances. Include secondary lettering two-thirds to three-fourths the size of principal lettering.

6. Fasteners: Stainless steel rivets or self-tapping screws.

7. Adhesive: Contact-type permanent adhesive, compatible with label and with substrate.

B. Plastic Labels for Equipment:

1. Manufacturers: Subject to compliance with requirements, provide products by one of the following:

a. Brady Corporation.

b. Brimar Industries, Inc.

c. Carlton Industries, LP.

d. Champion America.

e. Craftmark Pipe Markers.

f. emedco.

g. Kolbi Pipe Marker Co.

h. LEM Products Inc.

i. Marking Services, Inc.

j. Seton Identification Products; a Brady Corporation company.

2. Material and Thickness: Multilayer, multicolor, plastic labels for mechanical engraving, 1/8 inch thick, with predrilled holes for attachment hardware.

3. Letter and Background Color: As indicated for specific application under Part 3.

4. Maximum Temperature: Able to withstand temperatures of up to 160 deg F.

5. Minimum Label Size: Length and width vary for required label content, but not less than 2-1/2 by 3/4 inch.

6. Minimum Letter Size: 1/4 inch for name of units if viewing distance is less than 24 inches, 1/2 inch for viewing distances of up to 72 inches, and proportionately larger lettering for greater viewing distances. Include secondary lettering two-thirds to three-fourths the size of principal lettering.

7. Fasteners: Stainless steel rivets or self-tapping screws.

8. Adhesive: Contact-type permanent adhesive, compatible with label and with substrate.

C. Label Content: Include equipment's Drawing designation or unique equipment number, Drawing numbers where equipment is indicated (plans, details, and schedules), and the Specification Section number and title where equipment is specified.

2.02 WARNING SIGNS AND LABELS

A. Manufacturers: Subject to compliance with requirements, provide products by one of the following:

1. Brady Corporation.

2. Brimar Industries, Inc.

3. Carlton Industries, LP.

4. Champion America.

5. Craftmark Pipe Markers.

6. emedco.

7. LEM Products Inc.

8. Marking Services Inc.

9. National Marker Company.

10. Seton Identification Products; a Brady Corporation company.

11. Stranco, Inc.

B. Material and Thickness: Multilayer, multicolor, plastic labels for mechanical engraving, 1/8 inch thick, with predrilled holes for attachment hardware.

C. Letter and Background Color: As indicated for specific application under Part 3.

D. Maximum Temperature: Able to withstand temperatures of up to 160 deg F.

E. Minimum Label Size: Length and width vary for required label content, but not less than 2-1/2 by 3/4 inch.

F. Minimum Letter Size: 1/4 inch for name of units if viewing distance is less than 24 inches, 1/2 inch for viewing distances of up to 72 inches, and proportionately larger lettering for greater viewing distances. Include secondary lettering two-thirds to three-fourths the size of principal lettering.

G. Fasteners: Stainless steel rivets or self-taping screws.

H. Adhesive: Contact-type permanent adhesive, compatible with label and with substrate.

I. Arc-Flash Warning Signs: Provide arc-flash warning signs in locations and with content in accordance with requirements of OSHA and NFPA70E and other applicable codes and standards.

J. Label Content: Include caution and warning information plus emergency notification instructions.

2.03 WARNING TAPE

A. Manufacturers: Subject to compliance with requirements, provide products by one of the following:

1. Brady Corporation.

2. Brimar Industries, Inc.

3. Craftmark Pipe Markers.

4. National Marker Company.

5. Seton Identification Products; a Brady Corporation company.

B. Material: Vinyl.

C. Minimum Thickness: 0.005 inch.

D. Letter, Pattern, and Background Color: As indicated for specific application under Part 3.

E. Waterproof Adhesive Backing: Suitable for indoor or outdoor use.

F. Maximum Temperature: 160 deg F.

G. Minimum Width: 4 inches.

2.04 PIPE LABELS

A. Manufacturers: Subject to compliance with requirements, provide products by one of the following:

1. Actioncraft Products, Inc.; a division of Industrial Test Equipment Co., Inc.
2. Brady Corporation.
3. Brimar Industries, Inc.
4. Carlton Industries, LP.
5. Champion America.
6. Craftmark Pipe Markers.
7. emedco.
8. Kolbi Pipe Marker Co.
9. LEM Products Inc.
10. Marking Services Inc.
11. Seton Identification Products; a Brady Corporation company.

B. General Requirements for Manufactured Pipe Labels: Preprinted, color coded, with lettering indicating service and showing flow direction in accordance with ASME A13.1.

C. Letter and Background Color: As indicated for specific application under Part 3.

D. Pretensioned Pipe Labels: Precoiled, semirigid plastic formed to cover full circumference of pipe and to attach to pipe without fasteners or adhesive.

E. Self-Adhesive Pipe Labels: Printed plastic with contact-type, permanent-adhesive backing.

F. Pipe Label Contents: Include identification of piping service using same designations or abbreviations as used on Drawings. Also include:

1. Pipe size.

2. Flow-Direction Arrows: Include flow-direction arrows on distribution piping. Arrows may be either integral with label or applied separately.

3. Lettering Size: At least 1/2 inch for viewing distances of up to 72 inches and proportionately larger lettering for greater viewing distances.

2.05 DUCT LABELS

A. Manufacturers: Subject to compliance with requirements, provide products by one of the following:

1. Brady Corporation.

2. Brimar Industries, Inc.

3. Carlton Industries, LP.

4. Champion America.

5. Craftmark Pipe Markers.

6. emedco.

7. Kolbi Pipe Marker Co.

8. LEM Products Inc.

9. Marking Services Inc.

10. Seton Identification Products; a Brady Corporation company.

B. Material and Thickness: Multilayer, multicolor, plastic labels for mechanical engraving, 1/8 inch thick, and having predrilled holes for attachment hardware.

C. Letter and Background Color: As indicated for specific application under Part 3.

D. Maximum Temperature: Able to withstand temperatures up to 160 deg F.

E. Minimum Label Size: Length and width vary for required label content, but not less than 2-1/2 by 3/4 inch.

F. Minimum Letter Size: 1/4 inch for name of units if viewing distance is less than 24 inches, 1/2 inch for viewing distances of up to 72 inches, and proportionately larger lettering for greater viewing distances. Include secondary lettering two-thirds to three-fourths the size of principal lettering.

G. Fasteners: Stainless steel rivets or self-tapping screws.

H. Adhesive: Contact-type permanent adhesive, compatible with label and with substrate.

I. Duct Label Contents: Include identification of duct service using same designations or abbreviations as used on Drawings. Also include the following:

1. Duct size.

2. Flow-Direction Arrows: Include flow-direction arrows on main distribution ducts. Arrows may be either integral with label or may be applied separately.

3. Lettering Size: At least 1/2 inch for viewing distances of up to 72 inches and proportionately larger lettering for greater viewing distances.

2.06 STENCILS

A. Stencils for Piping:

1. Manufacturers: Subject to compliance with requirements, provide products by one of the following:

a. Brimar Industries, Inc.

b. Craftmark Pipe Markers.

c. Kolbi Pipe Marker Co.

d. Marking Services Inc.

2. Lettering Size: At least 1/2 inch for viewing distances of up to 72 inches and proportionately larger lettering for greater viewing distances.

3. Stencil Material: Aluminum, brass, or fiberboard.

4. Stencil Paint: Exterior, gloss, acrylic enamel in colors complying with recommendations in ASME A13.1 unless otherwise indicated. Paint may be in pressurized spray-can form.

5. Identification Paint: Exterior, acrylic enamel. Paint may be in pressurized spray-can form.

6. Letter and Background Color: As indicated for specific application under Part 3.

B. Stencils for Ducts:

1. Manufacturers: Subject to compliance with requirements, provide products by one of the following:

a. Brimar Industries, Inc.

b. Craftmark Pipe Markers.

c. Kolbi Pipe Marker Co.

d. Marking Services Inc.

2. Lettering Size: Minimum letter height of 1-1/4 inches for viewing distances of up to 15 ft. and proportionately larger lettering for greater viewing distances.

3. Stencil Material: Fiberboard or metal.

4. Stencil Paint: Exterior, gloss, acrylic enamel. Paint may be in pressurized spray-can form.

5. Identification Paint: Exterior, acrylic enamel. Paint may be in pressurized spray-can form.

6. Letter and Background Color: Color as indicated for specific application under Part 3.

C. Stencils for Access Panels and Door Labels, Equipment Labels, and Similar Operational Instructions:

1. Manufacturers: Subject to compliance with requirements, provide products by one of the following:

a. Brimar Industries, Inc.

b. Craftmark Pipe Markers.

c. Kolbi Pipe Marker Co.

d. Marking Services Inc.

2. Lettering Size: Minimum letter height of 1/2 inch for viewing distances of up to 72 inches and proportionately larger lettering for greater viewing distances.

3. Stencil Material: Fiberboard or metal.

4. Stencil Paint: Exterior, gloss, acrylic enamel. Paint may be in pressurized spray-can form.

5. Identification Paint: Exterior, acrylic enamel. Paint may be in pressurized spray-can form.

6. Letter and Background Color: As indicated for specific application under Part 3.

2.07 VALVE TAGS

A. Manufacturers: Subject to compliance with requirements, provide products by one of the following:

1. Actioncraft Products, Inc.; a division of Industrial Test Equipment Co., Inc.

2. Brady Corporation.

3. Brimar Industries, Inc.

4. Carlton Industries, LP.

5. Champion America.

6. Craftmark Pipe Markers.

7. emedco.

8. Kolbi Pipe Marker Co.

9. LEM Products Inc.

10. Marking Services Inc.

11. Seton Identification Products; a Brady Corporation company.

B. Description: Stamped or engraved with 1/4-inch letters for piping system abbreviation and 1/2-inch numbers.

1. Tag Material: aluminum, 0.031-inch minimum thickness, with predrilled or stamped holes for attachment hardware.

2. Fasteners: Brass link chain orbeaded chain.

C. Letter and Background Color: As indicated for specific application under Part 3.

D. Valve Schedules: For each piping system, on 8-1/2-by-11-inch bond paper. Tabulate valve number, piping system, system abbreviation (as shown on valve tag), location of valve (room or space), normal-operating position (open, closed, or modulating), and variations for identification. Mark valves for emergency shutoff and similar special uses.

1. Include valve-tag schedule in operation and maintenance data.

2.08 WARNING TAGS

A. Manufacturers: Subject to compliance with requirements, provide products by one of the following:

1. Brady Corporation.

2. Brimar Industries, Inc.

3. Champion America.

4. Craftmark Pipe Markers.

5. emedco.

6. Kolbi Pipe Marker Co.

7. LEM Products Inc.

8. Marking Services Inc.

9. Seton Identification Products; a Brady Corporation company.

B. Description: Preprinted or partially preprinted accident-prevention tags of plasticized card stock with matte finish suitable for writing.

1. Size: Approximately 4 by 7 inches.

2. Fasteners: Brass grommet and wire.

3. Nomenclature: Large-size primary caption, such as "DANGER," "CAUTION," or "DO NOT OPERATE."

4. Letter and Background Color: As indicated for specific application under Part 3.

PART 3 - EXECUTION

3.01 PREPARATION

A. Clean piping and equipment surfaces of incompatible primers, paints, and encapsulants, as well as dirt, oil, grease, release agents, and other substances that could impair bond of identification devices.

3.02 INSTALLATION, GENERAL REQUIREMENTS

A. Coordinate installation of identifying devices with completion of covering and painting of surfaces where devices are to be applied.

B. Coordinate installation of identifying devices with locations of access panels and doors.

C. Install identifying devices before installing acoustical ceilings and similar concealment.

D. Locate identifying devices so that they are readily visible from the point of normal approach.

3.03 INSTALLATION OF EQUIPMENT LABELS, WARNING SIGNS, AND LABELS

A. Permanently fasten labels on each item of mechanical equipment.

B. Sign and Label Colors:

1. White letters on an ANSI Z535.1 safety-blue background.

C. Locate equipment labels where accessible and visible.

D. Arc-Flash Warning Signs: Provide arc-flash warning signs on electrical disconnects and other equipment where arc-flash hazard exists, as indicated on Drawings, and in accordance with requirements of OSHA and NFPA 70E, and other applicable codes and standards.

3.04 INSTALLATION OF WARNING TAPE

A. Warning Tape Color and Pattern: Yellow background with black diagonal stripes.

B. Install warning tape on pipes and ducts, with cross-designated walkways providing less than 6 ft. of clearance.

C. Locate tape so as to be readily visible from the point of normal approach.

3.05 INSTALLATION OF PIPE LABELS

A. Piping Color Coding: Painting of piping is specified in Section 099123 "Interior Painting." Section 099600 "High-Performance Coatings."

B. Install pipe labels showing service and flow direction with permanent adhesive on pipes.

C. Stenciled Pipe Label Option: Stenciled labels showing service and flow direction may be provided instead of manufactured pipe labels, at Installer's option. Install stenciled pipe labels, complying with ASME A13.1, with painted, color-coded bands or rectangles on each piping system.

1. Identification Paint: Use for contrasting background.

2. Stencil Paint: Use for pipe marking.

D. Pipe-Label Locations: Locate pipe labels where piping is exposed or above accessible ceilings in finished spaces; machine rooms; accessible maintenance spaces such as shafts, tunnels, and plenums; and exterior exposed locations as follows:

1. Within 3 ft. of each valve and control device.

2. At access doors, manholes, and similar access points that permit view of concealed piping.

3. Within 3 ft. of equipment items and other points of origination and termination.

4. Spaced at maximum intervals of 25 ft. along each run. Reduce intervals to 10 ft. in areas of congested piping, ductwork, and equipment.

E. Do not apply plastic pipe labels or plastic tapes directly to bare pipes conveying fluids at temperatures of 125 deg F or higher. Where these pipes are to remain uninsulated, use a short section of insulation or use stenciled labels.

F. Flow-Direction Arrows: Use arrows to indicate direction of flow in pipes, including pipes where flow is allowed in both directions.

G. Pipe-Label Color Schedule:

1. Chilled-Water Piping: White letters on an ANSI Z535.1 safety-green background.

2. Condenser-Water Piping: White letters on an ANSI Z535.1 safety-green background.

3. Heating Water Piping: White letters on an ANSI Z535.1 safety-green background.

4. Refrigerant Piping: White letters on an ANSI Z535.1 safety-blue background.

5. Low-Pressure Steam Piping: Black letters on an ANSI Z535.1 safety-yellow background.

6. High-Pressure Steam Piping: Black letters on an ANSI Z535.1 safety-yellow background.

7. Steam Condensate Piping: Black letters on an ANSI Z535.1 safety-yellow background.

8. Toxic and Corrosive Fluids: Black letters on an ANSI Z535.1 safety-orange background.

9. Flammable Fluids: Black letters on an ANSI Z535.1 safety-yellow background.

10. Combustible Fluids: White letters on an ANSI Z535.1 safety-brown background.

11. Potable and Other Water: White letters on an ANSI Z535.1 safety-green background.

12. Compressed Air: White letters on an ANSI Z535.1 safety-blue background.

13. .

3.06 INSTALLATION OF DUCT LABELS

A. Install self-adhesive duct labels showing service and flow direction with permanent adhesive on air ducts.

1. Provide labels in the following color codes:

a. For air supply ducts: White letters on blue background.

b. For air return ducts: White letters on blue background.

c. For exhaust-, outside-, relief-, return-, and mixed-air ducts: White letters on blue background.

d. .

B. Stenciled Duct-Label Option: Stenciled labels showing service and flow direction may be provided instead of plastic-laminated duct labels, at Installer's option.

1. For all air ducts: Black letters on white background.

C. Locate label near each point where ducts enter into and exit from concealed spaces and at maximum intervals of 20 ft. where exposed or are concealed by removable ceiling system.

D. Stenciled Access Panels and Door Labels, Equipment Labels, and Similar Operational Instructions:

1. Black letters on White background.

3.07 INSTALLATION OF VALVE TAGS

A. Install tags on valves and control devices in piping systems, except check valves, valves within factory-fabricated equipment units, shutoff valves, and HVAC terminal devices and similar roughing-in connections of end-use fixtures and units. List tagged valves in a valve schedule in the operating and maintenance manual.

B. Valve-Tag Application Schedule: Tag valves according to size, shape, and color scheme and with captions similar to those indicated in "Valve-Tag Size and Shape" Subparagraph below.

1. Valve-Tag Size and Shape:

a. Chilled Water: 2 inches, round.

b. Condenser Water: 2 inches, round.

c. Refrigerant: 1-1/2 inches, round.

d. Hot Water: 2 inches, round.

e. Gas: 2 inches, round.

f. Low-Pressure Steam: 2 inches, square.

g. High-Pressure Steam: 2 inches, square.

h. Steam Condensate: 2 inches, square.

2. Valve-Tag Colors:

a. For each piping system, use the same lettering and background coloring system on valve tags as used for the Pipe Label Schedule text and background.

3.08 INSTALLATION OF WARNING TAGS

A. Warning Tag Color: Black letters on an ANSI Z535.1 safety-yellow background.

B. Attach warning tags, with proper message, to equipment and other items where indicated on Drawings scheduled.

END OF SECTION

23 05 93

SYSTEM TESTING, ADJUSTING AND BALANCING

PART 1 - GENERAL

1.01 SUMMARY

A. Related Sections:

1. Section 013300 Submittals.

2. Section 01524 Construction Waste Management

3. Section 01352 LEED Requirements

4. Section 01611 Environmental Management

5. Section 01570 Pollution Prevention and Control

1.02 RELATED DOCUMENTS

A. Contract Documents, General Requirements for Building Construction and Related Work, apply to work specified in this section.

B. Coordinate with Commissioning Requirements indicated in Section 019113. This contractor is responsible to comply with all requirements for the above section.

1.03 SCOPE

A. An independent Testing, Adjusting and Balancing (TAB) Contractor for the HVAC systems shall be selected by Owner and paid by Contractor and conform as part of this contract. TAB contractor shall not be hired by general contractor or any sub-contractor. Mechanical Contractor shall provide all assistance and information requested by the TAB contractor.

B. This section provides for the testing and balancing, of all systems and equipment. Refer to section 019113 for commissioning requirements.

C. These tests are required to determine that all systems and equipment involved may be safely energized and equipment.

D. Perform tests by and under the supervision of fully experienced and qualified personnel. Advise each respective manufacturer's representative of tests on their equipment.

E. Record all test data.

F. Each section of Divisions 22 and 23 that has the products or systems listed herein, incorporate this section by reference and is incomplete without the required tests stated herein.

G. This Section includes testing, adjusting, balancing HVAC systems and alarm point reporting verification to produce design objectives, including the following:

1. Balancing airflow and water flow within distribution systems, including sub-mains, branches, and terminals, to indicated quantities according to specified tolerances.

2. Adjusting total HVAC systems to provide indicated quantities.

3. Measuring electrical performance of HVAC equipment.

4. Testing, adjusting, and balancing of Hydraulic piping systems.

5. Testing, adjusting, and balancing of refrigerating systems.

6. Measurement of final operating condition of HVAC systems.

7. Sound measurement of equipment operating conditions.

8. Setting quantitative performance of HVAC equipment.

9. Verifying that automatic control devices are functioning properly and perform their intended functions.

10. Calibrating automatic temperature control sensors.

11. Verification of building alarm and alarm remote monitoring.

1.04 QUALIFICATIONS

A. The independent testing, adjusting, and balancing agency certified by National Environmental Balancing Bureau (NEBB) or by the Associated Air Balance Council (AABC) in those testing and balancing disciplines required for this project, and having at least one Professional Engineer registered in the State in which the services are to be performed, certified by NEBB or AABC as a Test and Balance Engineer.

B. The Firm shall have operated a minimum of five (5) years under its current Firm name, and shall be in good standing with the State of Texas, Franchise Tax Board. The firm shall submit their full incorporated name, Charter Number and Taxpayer's I.D. Number for proper verification of the firm's status.

C. The Firm shall be capable of providing a performance bond, by a bonding company licensed to do business in the State of Texas, if determined by the Owner that such a bond is required. The amount of the bond which may be required shall be equal to the cost of the proposal submitted, or in the case of more than one proposal, the sum of all such proposals and any awarded work in progress.

D. All personnel used on the job site shall be either professional engineers or engineering technicians, who shall have been permanent, full time employees of the firm for a minimum of six (6) months prior to the start of work for this specific project.

E. The TAB firm shall submit biographical data on the individual proposed who will directly supervise the TAB work, as well as other personnel scheduled to perform the technical work under the contract. It shall also submit a background record of at least five years of specialized experience in the field of air hydronic system balancing, and shall possess properly calibrated instrumentation. The supervisory personnel for the TAB firm shall be registered engineers in the mechanical field and all of the employees used in the TAB firm shall be permanent, full-time employees of the firm.

F. Pre-Balancing Conference: Prior to beginning of testing, adjusting, and balancing procedures, schedule and conduct a conference with the Engineer and representatives of installers of the mechanical systems. The objective of the conference is final coordination and verification of the system operation and readiness for testing, adjusting, and balancing.

G. Test, adjust, and balance the air systems before hydraulic, steam, and refrigerant systems.

H. Test, adjust and balance air conditioning systems during summer season and heating systems during winter season, including at least a period of operation at outside conditions within five degrees Fahrenheit wet bulb temperature of maximum summer design condition, and within ten degrees Fahrenheit dry bulb temperature of minimum winter design condition. Take final temperature reading during seasonal operation.

I. Approved TAB Contractors:

1. Engineered Air Balance

2. Precision Air

1.05 SERVICES OF THE MECHANICAL CONTRACTOR

A. Contractor shall provide all volume dampers, balancing dampers, balancing valves, test ports and Pete’s plugs as required by the Testing and Balancing Firm.

B. Contractor shall furnish a set of sheet metal shop drawings and HVAC piping drawings to the Testing and Balancing Firm during the submittal phase and incorporate the Testing and Balancing Firm’s mark-ups and requests into the project.

C. Contractor shall provide all required equipment to facilitate Testing and Balancing Firm’s work. This coordination shall be included in the Contractor’s base bid price.

D. Provide, correct, repair or replace deficient items or conditions found during the testing and balancing.

E. Provide replacement sheaves as directed by TAB Contractor to achieve scheduled air volumes.

F. For motors with a variable frequency drive, contractor shall provide belt and sheave adjustment such that units deliver their design CFM when speed drive is at 60 hertz.

G. Verify systems are complete and operable before commencing work. Verify the following:

1. Systems are started and operating in safe and normal condition.

2. Temperature control systems are installed complete and operable.

3. Proper thermal overload protection is in place for electrical equipment.

4. Final filters are clean and in place. If required, install temporary media in addition to final filters.

5. Duct systems are clean of debris.

6. Fans are rotating correctly.

7. Fire and volume dampers are in place and open.

8. Air coil fins are cleaned and combed.

9. Access doors are closed and duct end caps are in place.

10. Air outlets are installed and connected.

11. Duct system leakage is minimized.

12. Hydronic systems are flushed, filled, and vented.

13. Pumps are rotating correctly.

14. Proper strainer baskets are clean and in place or in normal position.

15. Service and balancing valves are open.

16. 1Re-sheave

1.06 REPORTS

A. The TAB firm shall, as a requirement of the TAB contract, arrange with the Architect to compile one set of mechanical specifications, all pertinent change orders, and the following:

   1. One complete set of Drawings less the structural sheets.

   2. One set of mechanical floor plans of the conditioned spaces. These Drawings shall be hard copy and PDF type to facilitate marking.

B. Approved submittal data on equipment installed, and related changes as required to accomplish the test procedures outlined in Paragraphs 1.06 through 1.10 of this Specification will be available through the Construction Inspector.

C. Submit test report forms for review a minimum of 30 days prior to requesting a final review by the Architect/ Engineer.

D. Furnish six (6) individually bound copies of test data. Neatly type and arrange data. Include with the data the date tested, personnel present, weather conditions, nameplate record of test instrument and list all measurements take, both prior to and after any corrections are made to the system. Record all failures and corrective action taken to remedy incorrect situation.

E. The Architect will retain on (1) copy and the Engineer will retain one (1) copy. The remaining four (4) copies will be returned to the Contractor for inclusion in the operation and maintenance manuals. Refer to Division 01 – Closeout Submittals.

1.07 REFERENCES

A. AABC. 1989. National Standards for Total System Balance, 5th edition.

B. AABC. 1997. Testing and Balancing Procedures.

C. ASHRAE – 1999 Applications Handbook: Chapter 36 – Testing, Adjusting and Balancing.

D. ASHRAE – 1999 Applications Handbook: Chapter 41 – Building Commissioning.

E. ASHRAE – 1999 HVAC Application Handbook: Chapter 46, Sound and Vibration Control.

1.08 RESPONSIBILITIES OF THE TAB FIRM

A. The TAB personnel shall check, adjust, and balance the components of the air conditioning system which will result in optimal noise, temperature, and airflow conditions in the conditioned spaces of the building while the equipment of the system is operating economically. This is intended to be accomplished after the system components are installed and operating as provided for in the contract documents. It is the responsibility of the Mechanical Contractor to place the equipment into service. Variable air volume systems shall be balanced in accordance with AABC 1989 Standard, Fifth Edition.

B. Liaison and Early Inspection:

1. The TAB firm personnel shall support on the job the commissioning authority responsible to act as liaison between the Owner, Architect and Contractor. The following reviews (observations) and tests shall be performed by the TAB Agency:

a. During the design stage, before the documents are finalized, review the mechanical drawings and specifications for balance ability and provide commentary.

b. During construction, review all HVAC submittals such as control diagrams, air handling devices, etc., that pertain to commissioning work and balance ability.

c. Allow for a fixed number of trips to the project site, over and above those required for testing and balancing for inspection of installation of the mechanical piping systems, sheet metal work, temperature controls and other component parts of the heating, air conditioning and ventilating systems during the construction stage. These inspections shall be made prior to and/or at the above ceiling inspection. Commentary will be provided to the RCM of each observation.

d. Test one (1) 8" single duct terminal box for performance capability and leakage as described in Section 23 36 00. The shipment of the box to the TAB Agency's lab will be at the manufacturer's cost and the test period will be for three (3) weeks from receipt of the box. Submittal data will not be approved until box testing passes. If the sample box is rejected for any reason the second test will be at the Contractor's cost and the time allowed will restart when the box is received at the TAB Agency.

e. Test one (1) 8" dual duct box for performance capability and leakage as described in Section 23 36 00. The shipment of the box to the TAB Agency's lab will be at the manufacturer's cost and the test period will be for three (3) weeks from receipt of the box. Submittal data will not be approved until box testing passes. If the sample box is rejected for any reason the second test will be at the Contractor's cost and the time allowed will restart when the box is received by the TAB agency.

f. Test 10% of the single and dual duct boxes for casing and damper leakage when the shipment arrives at the project site. All testing (except for the initial boxes) shall be performed on site. Boxes requiring re-testing will be charged to the Contractor at the unit price provided to the Owner.

g. Test one (1) lab configuration including fume hood with air valve, general exhaust air with air valve and supply air with air valve for performance capability through a full range of inlet pressures. The tracking capability of the exhaust air versus the supply air will be with the submitted hood sash fully open and as the sash is closed in 2" increments until fully closed. Track the three (3) valves' response time in relation to sash movement and the lab differential.

1) During the balancing process, as abnormalities and malfunctions of equipment or components are discovered by the TAB personnel, the Construction Inspector shall be advised in writing so that the condition can be corrected by the Mechanical Contractor. The written document need not be formal, but must be understandable and legible. Data from malfunctioning equipment shall not be recorded in the final TAB report. The TAB firm shall not instruct or direct the Contractor in any of the work, but will make such reports as are necessary to the Owner.

1.09 VABRIATION TESTS

A. Location of Points for Air Handling Unit Fans and all other Fans:

1. Fan bearing, drive end.

2. Fan bearing, opposite end.

3. Motor bearing, center (if applicable)

4. Motor bearing, drive end.

5. Motor bearing, opposite end.

B. Test Readings.

1. Horizontal, velocity and displacement.

1. Vertical, velocity and displacement.

2. Azial, velocity and displacement.

C. Normally acceptable readings, velocity and acceleration.

D. Unusual conditions at time of test.

E. Vibration sources (if non-complying)

1.10 FINAL AIR BALANCE

A. General: When systems are complete and ready for operation, the TAB Consultant will perform a final air balance for all air systems and record the results. The outside, supply, exhaust and return air volume for each air handling unit, supply fan and exhaust fan and the supply, exhaust or return air volume for each distribution device shall be adjusted to within ±5% of the value shown on the drawings. Air handling unit and fan volumes shall be adjusted by changing fan speed and adjusting volume dampers associated with the unit. Air distribution device volume shall be adjusted using the spin-in tap damper for flexible duct connected devices and the device OBD for duct connected devices. Air distribution devices shall be balanced with air patterns as specified. Duct volume dampers shall be adjusted to provide air volume to branch ducts where such dampers are shown. The general scope of balancing by the TAB Consultant will include, but is not limited to, the following:

1. Filters: Check air filters and filter media and balance only system with essentially clean filters and filter media. The Division 23 Contractor shall install new filters and filter media prior to the final air balance.

2. Blower Speed: Measure RPM at each fan or blower to design requirements. Where a speed adjustment is required, the Division 23 Contractor shall make any required changes.

3. Ampere Readings: Measure and record full load amperes for motors.

4. Static Pressure: Static pressure gains or losses shall be measured across each supply fan, cooling coil, heating coil, return air fan, air handling unit filter and exhaust fan. These readings shall be measured and recorded for this report at the furthest air device or terminal unit from the air handler supplying that device. Static pressure readings shall also be provided for systems which do not perform as designed.

5. Equipment Air Flow: Adjust and record exhaust, return, outside and supply air CFM (s) and temperatures, as applicable, at each fan, blower and coil.

6. Coil Temperatures: Set controls for full cooling and for full heating loads. Read and record entering and leaving dry bulb and wet bulb temperatures (cooling only) at each cooling coil, heating coil and HVAC terminal unit. At the time of reading record water flow and entering and leaving water temperatures (In variable flow systems adjust the water flow to design for all the above readings).

7. Zone Air Flow: Adjust each zone of multizone units, each HVAC terminal unit and air handling unit for design CFM.

8. Outline Air Flow

8. Outlet Air Flow: Adjust each exhaust inlet and supply diffuser, register and grille to within +5% of design air CFM. Include all terminal points of air supply and all points of exhaust. Note: For Labs and Rooms that are negative exhaust air flow shall be set to design +10% and supply to design -5%. Positive areas will have opposite tolerances.

9. Pitot Tube Traverses: For use in future troubleshooting by maintenance personnel, all exhaust ducts, main supply ducts and return ducts shall have air velocity and volume measured and recorded by the traverse method. Locations of these traverse test stations shall be described on the sheet containing the data.

10. Maximum and minimum air flow on terminal boxes.

1.11 SOUND VIBRATION AND ALIGNMENT

A. Sound: Read and record sound levels at up to 15 locations in the building designated by the Engineer. All measurements shall be made using an Octave Band Analyzer. All tests shall be conducted when the building is quiet in the presence of the Engineer, if he so desires.

B. Vibration: Read and record vibration for all water circulating pumps, air handling units, and fans which have motors larger than 10 HP. Include equipment vibration, bearing housing vibration, foundation vibration, building structure vibration, and other tests as directed by the Engineer. Readings will be made using portable IRD (or approved equal) equipment capable of filtering out various unwanted frequencies and standard reporting forms. Maximum vibration at any point listed above, or specified, shall not exceed 1 mil on fans and 1 mil on pumps unless otherwise specified. Equipment manufacturers shall rectify all systems exceeding vibration tolerances.

1.12 TESTING OF TEMPERATURE CONTROL SYSTEMS

A. In the process of performing the TAB work, the TAB Agency shall:

1. Work with the temperature control contractor to ensure the most effective total system operation within the design limitations, and to obtain mutual understanding of intended control performance.

2. Verify that all control devices are properly connected.

3. Verify that all dampers, valves and other controlled devices are operated by the intended controller.

4. Verify that all dampers and valves are in the position indicated by the controller (open, closed or modulating).

5. Verify the integrity of valves and dampers in terms of tightness of close-off and full-open positions. This includes dampers in multizone units, terminal boxes and fire/smoke dampers.

6. Observe that all valves are properly installed in the piping system in relation to direction of flow and location.

7. Observe the calibration of all controllers.

8. Verify the proper application of all normally opened and normally closed valves.

9. Observe the locations of all thermostats and humidistats for potential erratic operation from outside influences such as sunlight, drafts or cold walls.

10. Observe the locations of all sensors to determine whether their position will allow them to sense only the intended temperatures or pressures of the media. Control Contractor will relocate as deemed necessary by the TAB Agency.

11. Verify that the sequence of operation for any control mode is in accordance with approved shop drawings and specifications. Verify that no simultaneous heating and cooling occurs.

12. Verify that all controller setpoints meet the design intent.

13. Check all dampers for free travel.

14. Verify the operation of all interlock systems.

15. Perform variable volume system verification to assure the system and its components track with changes from full flow to minimum flow.

B. A systematic listing of the above testing and verification shall be included in the final TAB report.

1.13 SUBMITTALS

A. Product data. Unless otherwise indicated, submit the following for each type of product provided under work of this Section:

1. Recycled Content:

a. Indicate recycled content; indicate percentage of pre-consumer and post-consumer recycled content per unit of product.

2. Local/Regional Materials:

a. Indicate location of manufacturing facility; indicate distance between manufacturing facility and the project site.

b. Indicate location of extraction, harvesting, and recovery; indicate distance between extraction, harvesting, and recovery and the project site.

3. VOC data:

a. Submit manufacturer's product data for joint compounds. Indicate VOC and chemical component limits of the product. Submit MSDS highlighting VOC and chemical component limits. VOC contents and chemical component limits must be less than the limits of Green Seal’s Standard GS-11.

b. Submit manufacturer’s certification that products comply with Green Seal’s Standard GS-11

c. Submit environmental data in accordance with Table 1 of ASTM E2129 for products provided under work of this Section.

4. Submit the following according to Conditions of the Construction Contract.

a. Product data. Unless otherwise indicated, submit the following for each type of product provided under work of this Section:

PART 2 - PRODUCTS

2.01 ENVIRONMENTALLY PREFERABLE PRODUCTS

A. Provide environmentally preferable products to the greatest extent possible.

1. To the greatest extent possible, provide products and materials that promote stewardship of the earth's resources, promote good indoor environmental quality (IEQ), and promote efficiencies in operational performance.

B. Provide products listed on the EPA Comprehensive Procurement Guidelines to the greatest extent practicable.

C. Provide products listed on the USGBC Directory of Products and Services to the greatest extent possible.

2.02 RECYCLED CONTENT

A. Provide recycled content products to the greatest extent possible.

1. To the greatest extent possible, provide materials with recycled content such that the sum of post-consumer recycled content plus one-half of the post-industrial content constitutes at least 10% of the total value of the materials in the project.

2.03 REGIONAL MATERIALS

A. Provide Regional materials and products to the greatest extent possible that are extracted and manufactured within the region.

1. Provide materials and products that use a minimum of 20 % of building products that are manufactured regionally within a radius of 500 miles from the project site.

a. Manufacturing refers to the final assembly of components into the building product that is furnished and installed by the tradesman.

2. Of the regionally manufactured materials used and documented, use a minimum of 50% of building materials and products that are extracted, harvested or recovered (as well as manufactured) within 500 miles of the project site.

PART 3 - EXECUTION

3.01 PREPARATION

A. Follow industry standard practices and procedures for testing, balancing, as listed in paragraph 1.3 above.

B. The A/E must be notified a minimum of 72 hours prior to any tests being conducted.

C. The TAB Contractor must be notified a minimum of five working days prior to conduction any duct leakage tests and same must be present to witness all duct leakage tests.

3.02 GENERAL PROCEDURES FOR BALANCING AIR SYSTEMS

A. Adjust air handling and distribution systems to obtain required or design supply, return, and exhaust air quantities.

B. Make air quantity measurements in main ducts by Pitot tube traverse of entire cross sectional area of duct.

C. Measure air quantities at air inlets and outlets.

D. Adjust distribution system to obtain uniform space temperatures free from objectionable drafts.

E. Use volume control devices to regulate air quantities only to extent adjustments do not create objectionable air motion or sound levels. Effect volume control by using volume dampers located in ducts.

F. Vary total system air quantities by adjustment of fan speeds. Provide sheave drive changes to vary fan speed. Vary branch air quantities by damper regulation.

G. Provide system schematic with required and actual air quantities recorded at each outlet or inlet.

H. Measure static air pressure conditions on air supply units, including filter and coil pressure drops, and total pressure across fan. Make allowances for **50 percent** loading of filters.

I. Adjust outside air automatic dampers, outside air, return air, and exhaust dampers for design conditions.

J. Measure temperature conditions across outside air, return air, and exhaust dampers to check leakage.

K. Measure building static pressure and adjust supply, return, and exhaust air systems to obtain required relationship between each to maintain approximately 0.05 inches positive static pressure near building entries in clean rooms.

3.03 PROCEDURES FOR CONSTANT-VOLUME AIR SYSTEMS

A. Adjust fans to deliver total indicated airflows within the maximum allowable fan speed listed by fan manufacturer.

1. Measure total airflow.

   a. Where sufficient space in ducts is unavailable for Pitot-tube traverse measurements, measure airflow at terminal outlets and inlets and calculate the total airflow.

   b. Measure outlet static pressure as far downstream from the fan as practical and upstream from restrictions in ducts such as elbows and transitions.

   c. Measure static pressure directly at the fan outlet or through the flexible connection.

   d. Measure inlet static pressure of single-inlet fans in the inlet duct as near the fan as possible, upstream from the flexible connection, and downstream from duct restrictions.

   e. Measure inlet static pressure of double-inlet fans through the wall of the plenum that houses the fan.

2. Measure static pressure across each component that makes up an air-handling unit, rooftop unit, and other air-handling and -treating equipment.

   a. Report the cleanliness status of filters and the time static pressures are measured.

   b. Measure static pressures entering and leaving other devices, such as sound traps, heat-recovery equipment, and air washers, under final balanced conditions.

   c. Review Record Documents to determine variations in design static pressures versus actual static pressures. Calculate actual system-effect factors. Recommend adjustments to accommodate actual conditions.

   d. Obtain approval from construction manager for adjustment of fan speed higher or lower than indicated speed. Comply with requirements in HVAC Sections for air-handling units for adjustment of fans, belts, and pulley sizes to achieve indicated air-handling-unit performance.

   e. Do not make fan-speed adjustments that result in motor overload. Consult equipment manufacturers about fan-speed safety factors. Modulate dampers and measure fan-motor amperage to ensure that no overload will occur. Measure amperage in full-cooling, full-heating, economizer, and any other operating mode to determine the maximum required brake horsepower.

B. Adjust volume dampers for main duct, sub-main ducts, and major branch ducts to indicated airflows within specified tolerances.

1. Measure airflow of sub-main and branch ducts.

2. Where sufficient space in sub-main and branch ducts is unavailable for Pitottube traverse measurements, measure airflow at terminal outlets and inlets and calculate the total airflow for that zone.

3. Measure static pressure at a point downstream from the balancing damper, and adjust volume dampers until the proper static pressure is achieved.

4. Re-measure each sub-main and branch duct after all have been adjusted. Continue to adjust sub-main and branch ducts to indicated airflows within specified tolerances.

5. Measure air outlets and inlets without making adjustments.

C. Adjust air outlets and inlets for each space to indicated airflows within specified tolerances of indicated values. Make adjustments using branch volume dampers rather than extractors and the dampers at air terminals.

1. Adjust each outlet in same room or space to within specified tolerances of indicated quantities without generating noise levels above the limitations prescribed by the Contract Documents.

2. Adjust patterns of adjustable outlets for proper distribution without drafts.

3.04 PROCEDURES FOR VARIABLE-AIR-VOLUME SYSTEMS

A. Compensating for Diversity: When the total airflow of all terminal units is more than the indicated airflow of the fan, place a selected number of terminal units at minimum set-point airflow with the remainder at maximum-airflow condition until the total airflow of the terminal units equals the indicated airflow of the fan. Select the reduced-airflow terminal units so they are distributed evenly among the branch ducts.

B. Pressure-Independent, Variable-Air-Volume Systems: After the fan systems have been adjusted, adjust the variable-air-volume systems as follows:

1. Set outdoor-air dampers at minimum, and set return- and exhaust-air dampers at a position that simulates full-cooling load.

2. Select the terminal unit that is most critical to the supply-fan airflow and static pressure. Measure static pressure. Adjust system static pressure so the entering static pressure for the critical terminal unit is not less than the sum of the terminal-unit manufacturer's recommended minimum inlet static pressure plus the static pressure needed to overcome terminal-unit discharge system losses.

3. Measure total system airflow. Adjust to within indicated airflow.

4. Set terminal units at maximum airflow and adjust controller or regulator to deliver the designed maximum airflow. Use terminal-unit manufacturer's written instructions to make this adjustment. When total airflow is correct, balance the air outlets downstream from terminal units the same as described for constant-volume air systems.

5. Set terminal units at minimum airflow and adjust controller or regulator to deliver the designed minimum airflow. Check air outlets for a proportional reduction in airflow the same as described for constant-volume air systems.

6. If air outlets are out of balance at minimum airflow, report the condition but leave outlets balanced for maximum airflow.

7. Re-measure the return airflow to the fan while operating at maximum return airflow and minimum outdoor airflow.

8. Adjust the fan and balance the return-air ducts and inlets the same as described for constant-volume air systems.

9. Measure static pressure at the most critical terminal unit and adjust the static-pressure controller at the main supply-air sensing station to ensure that adequate static pressure is maintained at the most critical unit.

10. Record final fan-performance data.

3.05 MECHANICAL EQUIPMENT

A. Verify the following:

1. Equipment is operable and in safe and normal condition.

2. Temperature control systems are installed complete and operable.

3. Proper thermal overload protection is in place for electrical equipment.

4. Final filters are clean and in place. If required, install temporary media in addition to final filters.

5. Duct systems are clean of debris.

6. Correct fan rotation.

7. Fire and volume dampers are in place and open.

8. Coil fins have been cleaned and combed.

9. Access doors are closed and duct end caps are in place.

10. Air outlets are installed and operable.

11. Duct system leakage has been minimized.

12. Pretest components in the VFD. Provide factory certification of testing the entire VFD with varying induction motor loads for 24 hours prior to shipment.

13. Proper sequencing and operation of all DDC Control System components and equipment as required by ASHRAE Standard on Total Building Mechanical System operation.

14. Perform sound power level tests and provide required data on each occupied space adjacent to, above, or below mechanical/ air handling unit equipment rooms.

15. Perform vibration test and provide required data on each piece of air handling/ ventilation equipment or fan. Vibration testing must be complete in compliance with the

requirements of ASHRAE – 1999 HVAC applications Handbook Chapter 46, Sound and Vibration Control and the maximum listed RMS values listed herein.

B. Duct Leakage

1. Test all supply air ductwork, to include, but not limited to, downstream of all single zone and multi-zone air handling units, downstream of all VAV air handling units and upstream of fan powered terminal units at 2-1/2 inches of static pressure (except where this requirement would exceed the ductwork design pressure classification) to have a total leakage value not to exceed 2% of the total system airflow.

2. Test all supply, return, and exhaust air ductwork, to include, but not limited to, downstream of fan coil units and fan powered terminal units, upstream of air handling units, and upstream and downstream (where applicable) of fans at 1-1/2 inches of static pressure to have a total leakage value not to exceed 2% of the total system design airflow.

3. Ductwork that initially fails these tests shall be replaced, modified, resealed, etc. as required to meet the leakage requirement and then re-tested to ensure compliances.

3.06 REPORTS

A. The activities described in this section shall culminate in a report to be provided in quadruplicate (4) individually bound to the RCM. Neatly type and arrange data. Include with the data the date tested, personnel present, weather conditions, nameplate record of test instrument and list all measurements taken after all corrections are made to the system. Record all failures and corrective action taken to remedy incorrect situation. The intent of the final report is to provide a reference of actual operating conditions for the Owner's operations personnel.

B. All measurements and recorded readings (of air, electricity, etc.) that appear in the reports must have been made onsite by the permanently employed technicians or engineers of the firm.

C. At the option of the Construction Inspector, all data sheets tabulated each day by TAB personnel shall be submitted for initial by the Construction Inspector. Those work sheets so initialed, or copies thereof, shall be presented as a supplement to the final TAB report.

D. Submit reports on forms approved by the Owner & Engineer which will include the following information as a minimum:

1. Title Page

a. Company Name

a. Company Address

b. Company telephone number

c. Project name

d. Project location

e. Project Manager

f. Project Engineer

g. Project Contractor

h. Project Identification Number

2. Instrument List

a. Instrument

a. Manufacturer

b. Model

c. Serial Number

d. Range

e. Calibration date

f. What test instrument was used for

3. Fan Data (Supply and Exhaust)

a. Location

a. Manufacturer

b. Model

c. Air flow, specified and actual

d. Total static pressure (total external), specified and actual

e. Inlet pressure

f. Discharge pressure

g. Fan RPM

4. Return Air/Outside Air Data (If fans are used, same data as for 3 above)

a. Identification/location

a. Design return air flow

b. Actual return air flow

c. Design outside air flow

d. Return air temperature

e. Outside air temperature

f. Required mixed air temperature

g. Actual mixed air temperature

5. Electric Motors

a. Manufacturer

a. HP/BHP

b. Phase, voltage, amperage, nameplate, actual

c. RPM

d. Service factor

e. Starter size, heater elements, rating

6. V-Belt Drive

a. Identification/location

a. Required driven RPM

b. Driven sheave, diameter and RPM

c. Belt, size and quantity

d. Motor sheave, diameter and RPM

e. Center-to-center distance, maximum, minimum and actual

7. Duct Traverse

a. System zone/branch

a. Duct size

b. Area

c. Design velocity

d. Design air flow

e. Test velocity

f. Test air flow

g. Duct static pressure

h. Air temperature

i. Air correction factor

8. Air Monitoring Station Data

a. Identification/location

a. System

b. Size

c. Area

d. Design velocity

e. Design air flow

f. Test velocity

g. Test air flow

9. Air Distribution Test Sheet

a. Air terminal number

a. Room number/location

b. Terminal type

c. Terminal size

d. Area factor

e. Design velocity

f. Design air flow

g. Test (final) velocity

h. Test (final) air flow

10. Cooling Coil Data

a. Identification/number

b. Location

c. Service

d. Manufacturer

e. Entering air DB temperature, design and actual

f. Entering air WB temperature, design and actual

g. Leaving air DB temperature, design and actual

h. Leaving air WB temperature, design and actual

i. Air pressure drop, design and actual

11. Heating Coil Data

a. Identification/number

a. Location

b. Service

c. Manufacturer

d. Air flow, design and actual

e. Entering air temperature, design and actual

f. Leaving air temperature, design and actual

g. Air pressure drop, design and actual

12. Sound Level Report

a. Location (Location established by the design engineer)

a. NC curve for eight (8) bands - equipment off

b. NC curve for eight (8) bands - equipment on

13. Vibration Test on equipment having 10 HP motors or above

a. Location of points:

1) Fan bearing, drive end

2) Fan bearing, opposite end

3) Motor bearing, center (if applicable)

4) Motor bearing, drive end

5) Motor bearing, opposite end

6) Casing (bottom or top)

7) Casing (side)

8) Duct after flexible connection (discharge)

9) Duct after flexible connection (suction)

b. Test readings:

1) Horizontal, velocity and displacement

2) Vertical, velocity and displacement

3) Axial, velocity and displacement

c. Normally acceptable readings, velocity and acceleration

d. Unusual conditions at time of test

e. Vibration source (if non-complying)

14. Control verification indicating date performed and any abnormalities identified.

a. Point Location/Description

b. EMS Readout (Setpoint and Actual)

c. Actual Readout

d. Interlocks

e. Safeties

1) VSD Normal Operation

2) VSD Bypass Operation

f. Alarms

g. Sequences of Operation

END OF SECTION

23 07 13

HVAC INSULATION

PART 1 - GENERAL

1.01 SECTION INCLUDES

A. Retain or delete this article in all Sections of Project Manual.

B. Furnish and install thermal insulation for mechanical and plumbing piping systems including jackets and accessories.

C. Insulation systems for sheet metal duct conveying cold, hot and grease laden air. Provide duct insulation systems which have been manufactured, fabricated and installed to meet all thermal requirements of mechanical systems. Insulating systems shall be installed in strict accordance with manufacturer’s field requirements and the current International Energy Conservation Code.

D. HVAC system includes horizontal roof drain, lines, and waste lines which receive condensate from air handling units or evaporators.

1.02 RELATED SECTIONS

A. Section 090190 – Maintenance of Painting and Coatings.

B. Section 230529 – Hangers and Supports for HVAC Piping and Equipment.

C. Section 230553 – Mechanical Identification

D. Section 013300 Submittals.

E. Section 01524 Construction Waste Management

F. Section 01352 LEED Requirements

G. Section 01611 Environmental Management

H. Section 01570 Pollution Prevention and Control

1.03 REFERENCES

A. ASTM C 178 – Steady State Heat Flux Measurements and Thermal Transmission Properties by Means of the Guarded-HOT-Plate Apparatus.

B. ASTM C 195 – Mineral Fiber Thermal Insulation Cement.

C. ASTM C 533 – Calcium Silicate Block and Pipe Thermal Insulation.

D. ASTM C 534 - Preformed Flexible Elastomeric Cellular Thermal Insulation.

E. ASTM C 547 – Mineral Fiber Preformed Pipe Insulation.

F. ASTM C 591 – Preformed Cellular Polyurethane Thermal Insulation.

G. ASTM C 1126 – Rigid Cellular Phenolic Thermal Insulation.

H. ASTM B 209 – Aluminum and Aluminum-alloy Sheet and Plate.

I. ASTM E 84 – Surface Burning Characteristics of Building Materials.

J. ASTM E 96 –Water Vapor Transmission of Materials.

1.04 SUBMITTALS

A. Include product description, list of materials, and thickness for each service and locations.

B. Include detail drawings of insulation dams.

C. Product data. Unless otherwise indicated, submit the following for each type of product provided under work of this Section:

1. Recycled Content:

   a. Indicate recycled content; indicate percentage of pre-consumer and post-consumer recycled content per unit of product.

2. Local/Regional Materials:

   a. Indicate location of manufacturing facility; indicate distance between manufacturing facility and the project site.

   b. Indicate location of extraction, harvesting, and recovery; indicate distance between extraction, harvesting, and recovery and the project site.

3. VOC data:

   a. Submit manufacturer's product data for joint compounds. Indicate VOC and chemical component limits of the product. Submit MSDS highlighting VOC and chemical component limits. VOC contents and chemical component limits must be less than the limits of Green Seal's Standard GS-11.

   b. Submit manufacturer's certification that products comply with Green Seal's Standard GS-11

   c. Submit environmental data in accordance with Table 1 of ASTM E2129 for products provided under work of this Section.

4. Submit the following according to Conditions of the Construction Contract.

   a. Product data. Unless otherwise indicated, submit the following for each type of product provided under work of this Section:

1.05 QUALITY ASSURANCE

A. Application Company Qualifications: The installing company must be solely and exclusively in the business of insulation installation for the previous consecutive fiver year period. The installing company must also be regularly engaged in installing the specific specified insulation material types on projects of equal or greater magnitude and scope as this project for the previous consecutive five year period. Documentation of the above listed requirements must be submitted prior to insulation material submitted.

B. Application Personnel Qualifications: The installing company must provide qualified installation personnel on this project jobsite directly employed by them who are skilled and proficient at installing the specific specified insulation Material types.

C. Any material found, by the A/E, to be improperly installed or not installed in total compliance with the specific installation instructions and methods (written or implied) of the material manufacturer must be removed by the installing company. The preparation instructions must be followed prior to the re-installation of the insulation material using the correct installation instructions and methods of the material manufacturer.

D. All material (to include, but not limited to, insulation, jackets, facings, coatings, mastics, adhesive, sealants, etc.) Installed inside the building must have a certified and tested composite flame spread/smoke developed rating of 25/50 in accordance with ASTM E84.

1.06 ENVIRONMENTAL REQUIREMENTS

A. Maintain ambient temperatures and conditions required by manufacturers of adhesive and insulation.

B. All insulation shall comply with IECC 2012.

PART 2 - PRODUCTS

2.01 ENVIRONMENTALLY PREFERABLE PRODUCTS

A. Provide environmentally preferable products to the greatest extent possible.

1. To the greatest extent possible, provide products and materials that promote stewardship of the earth's resources, promote good indoor environmental quality (IEQ), and promote efficiencies in operational performance.

B. Provide products listed on the EPA Comprehensive Procurement Guidelines to the greatest extent practicable.

C. Provide products listed on the USGBC Directory of Products and Services to the greatest extent possible.

2.02 RECYCLED CONTENT

A. Provide recycled content products to the greatest extent possible.

1. To the greatest extent possible, provide materials with recycled content such that the sum of post-consumer recycled content plus one-half of the post-industrial content constitutes at least 10% of the total value of the materials in the project.

2.03 REGIONAL MATERIALS

A. Provide Regional materials and products to the greatest extent possible that are extracted and manufactured within the region.

1. Provide materials and products that use a minimum of 20 % of building products that are manufactured regionally within a radius of 500 miles from the project site.

a. Manufacturing refers to the final assembly of components into the building product that is furnished and installed by the tradesman.

2. Of the regionally manufactured materials used and documented, use a minimum of 50% of building materials and products that are extracted, harvested or recovered (as well as manufactured) within 500 miles of the project site.

2.04 MANUFACTURERS

A. Insulation

1. Ownes-Corning Fiberglass Corporation.

2. UpJohn CRP/DOW Chemical Company.

3. Knuff Corporation.

4. FGH Fabricators, Inc.

5. Armstrong.

6. Quiet Liner by Acoustical Surfaces Inc.

B. Jackets

1. Childers Products Company.

2. PABCO.

3. RFR Products, Inc.

4. Kinetics Duct Wrap

2.05 PIPE INSULATION

A. Type B-1: Elastomer, closed cell, flexible, insulation; ASTM E 96, maximum vapor transmission rating of 0.20 pers; ASTM C 177; ‘k’ value of 0.27 at 75 degrees F.

B. Type B-2: Fiberglass Piping Insulation: ASTM C 547, Class 1 unless otherwise indicated. (Indoor locations only).

2.06 DUCT INSULATION MATERIALS

A. Type C: Flexible Fiberglass Duct Insulation (Indoor application): ASTM C 553, Type I, Class B-4, 2 " thick, 1.0 PCF density, minimum R-6 (installed) with foil faced continuous vapor barrier. This application is limited to concealed indoor locations only.

B. Type D: Rigid Fiberglass Duct Insulation (Indoor application): ASTM C 612, Class 1, 2" thick, 3.0 PCF densities, for both supply and exhaust round ducts exposed to view locations, or spaces without ceilings. Round duct insulation shall be E. O. Wood Rigid wrap® for all round ducts in areas without ceiling.

C. Type E: Rigid Foam Glass Duct Insulation (Outdoor application): Foamglas ONE™ block with 7.3 lbs/ft3 and 0.29 BTU-inch /hr F thermal conductivity per ASTM C 240, Type I.

D. Type F: Quiet Liner by Acoustical Surfaces Inc. or approved equal. Quiet Natural Fiber Liner shall be thermally bonded HVAC insulation with superior acoustic and thermal performance. Liner shall be made from natural fibers; Quiet Liner™ shall not contain fiberglass. The fibers used to manufacture Quiet Liner shall offer sound absorption properties. The air stream surface shall be overlaid with a durable, fire-resistant black facing, to provide additional strength to the product. Both the insulation and the facing shall be treated with an EPA registered anti-microbial agent. Surface Burning Characteristics shall be less than 25/50 shall be Class A / Class 1 per ASTM E84, UL 723, and NFPA 255. Fungi Resistance shall indicate no growth per ASTM C1338 and ASTM C739. Water Vapor Absorption shall be less than 1% by weight per ASTM C1104.

E. Jackets for Duct Insulation: ASTM C 921, Type I for duct with temperatures below ambient; Type II for duct with temperatures above ambient.

F. Jackets for outdoor Duct Insulation: Encase exterior duct insulation with 16 MIL Stainless steel jacket with "Z" closures for weather-proof construction.

G. Duct Insulation Accessories: Provide bands, wires, tape, anchors, corner angles and similar accessories as recommended by insulation manufacturer for applications indicated.

H. Mechanical Fasteners:

1. Gemco Type IH-A from Goodloe E. Moore, Inc., Danville, IL 800-331-1164.

2. Eckoustic-Klip from Eckel Industries Inc., Cambridge, MA 617-491-3221.

3. INC Stick-Pin from Industrial Noise Control Inc. Addison, IL 312-620-1998.

I. Duct Insulation Compounds: Provide cements, adhesives, coatings, sealers, protective finishes and similar compounds as recommended by insulation manufacturer for applications indicated.

1. 15-141 from King Co., St. Louis, MO 314-772-9953.

2. Tuffbond from Goodloe E. Moore, Inc., Danville, IL 800-331-1164.

3. INC C-700 from Industrial Noise Control Inc., Addison, IL 312-620-1998.

J. All external duct wrap shall be 2 " thick, 1.0 P.C.F. density minimum, and is required on all and supply air duct that also meets with the minimum R-value per International Energy Code 2013. External duct wrap shall be with foil faced continuous vapor barrier. This application is limited to concealed indoor locations only.

2.07 DUCTWORK JACKETS

A. Interior, Concealed Applications

1. Type D Insulation: one and a half (1½”) pounds per cubic feet minimum density semi-rigid glass fiber. Provide factory applied ASJ white kraft foil vapor barrier. Type B Insulation: Finish coat is not required.

2. Insulate fittings, joints and valves with molded insulation of like material and thickness as adjoining pipe. Use insulating cement to fill voids and cracks. Finish with #10 glass membrane and Childers #CP-30 L.O. vapor barrier mastic.

B. Interior, Exposed Applications

1. Double wall duct and fittings will consist of a solid inner liner, 1" thick x 1.0 lb/ft3 layer of glass fiber insulation, and a solid outer pressure shell.

2. Double wall jacket with spiral lockseam with standing rib.

3. Fitting ends shall be sized to slip-fit into spiral duct of the same nominal size.

C. Exterior Applications

1. Prime sheet metal with Pittcote 300 before the installation of insulation.

2. Insulate exterior ductwork with 2 layers of 1 ½” thick FOAMGLAS sheet.

3. Wrap insulation with 8 oz canvas. Finish with 2 coats on 8 oz canvas shall be Childers CP-50 prior to final jacket installation.

4. Cover with 0.02 inch thick stainless steel jacket having integral moisture barrier with seams located at 2 or 10 o’clock position of horizontal piping. All laps must be minimum 2”.

D. Jacket Materials

1. Factory Applied Jackets: White kraft bonded to reinforced foil vapor barrier with self-sealing adhesive joints.

2. PVC Jackets: One piece, pre-molded type, to meet flame spread and smoke developed rating of 25/50 in accordance with ASTM E 84.

3. Canvas Jackets: UL listed treated cotton fabric, 8 ounces per square

4. Fiberglass Cloth Reinforcing Mesh: #10 glass cloth with minimum weight of 3.9 ounces per square yard.

5. Aluminum Jackets: (Indoor applications exposed to view) ASTM B 209, 0.020 inch thick; smooth finish with factory applied moisture barrier.

6. Stainless Steel Jackets: (Outdoor applications) Type 304 stainless steel; 0.010 inch thick; smooth finish.

2.08 ACCOUSTICAL DUCT WRAP (TYPE L)

A. The sound control lagging material is applied continuously as part of the duct system to reduce sound transmission from the duct i.e., control breakout noise.

B. Material shall consist of a rugged, reinforced aluminized-faced, mass loaded limp vinyl barrier, 9.8-kg/m^2 (2-psf). Material shall be non-lead composition for safe handling and easy installation.

C. Pipe and duct shall be wrapped with fiber glass batt or other appropriate resilient material in order to decouple sound control lagging from surface of pipe and duct. For the required optimal performance, sound control lagging shall be installed / wrapped over the duct thermal insulation and shall not be applied directly to surface of duct.

D. The sound control lagging material shall be provided by a manufacturer having a minimum of five years' experience in furnishing similar noise control lagging material for pipe and duct.

E. The barrier shall be constructed of a 6-mm (0.24") thick mass loaded, limp vinyl sheet bonded to a thin layer of reinforced aluminum foil on one side. The barrier shall have a nominal density of 9.8-kg/m^2 (2.0-psf).

F. Sound control lagging material shall be Kinetics Noise Control, Inc. Model KNM-200AL or equal.

G. Products not meeting minimum test standards will not be accepted. Submittals shall include test reports from independent laboratories meeting the following minimum criteria:

H. Insertion Loss when tested as a duct wrap over 51-mm (2") thick, 80.1 kg/m (5-pcf) fiber glass over a 20-gauge duct system (per ASTM E1222-90)

1.

Frequency, Hz	63	125	250	500	1000	2000	4000
	5	9	18	28	34	37	37

2.09 ACCESORIES

A. A. Insulation Bands: 3/4 inch wide; 0.015 inch thick galvanized steel, stainless steel or 0.007 inch thick aluminum.

B. Metal Jacket Bands: 3/8 inch wide; 0.015 inch thick aluminum or 0.010 inch thick stainless steel to match jacket.

C. Insulating Cement: ASTM C 195; hydraulic setting mineral wool; Ryder One-Coat.

D. Sealants: Used at valve, fittings and where insulation is terminated. Brushes apply sealant to end of insulation and continued along pipe surface. Provide Childers CP-30 L.O. sealant.

E. Adhesives: Used to adhere the longitudinal lap seam of vapor barrier jackets and at butt joints between insulation or fitting covers. Provide Childers CP-82 or approved equal as general purpose adhesive. Use Childers CP-97 fibrous adhesive for calcium silicate or when adhering pipe saddles and shields to the insulation.

F. Primers: Provide Childers CP-50 diluted 50% with water primer to cover insulating cements prior to finish coating.

PART 3 - EXECUTION

3.01 PIPE PREPARATION

A. Thoroughly clean all surfaces to be insulated as required to remove all oil, grease, loose scale, rust, and foreign matter. Piping must be completely dry at the time of application.

B. The installation of piping insulation associated with an operating chilled water system is strictly prohibited.

C. Provide primer coat on all piping, to include field welds and over factory applied paint/ coating, in total compliance and compatible with and approved by the Engineer prior to installation of insulation (No Exceptions).

D. Install insulation material only after all performance tests on piping have been completed and approved by the Engineer (No Exceptions).

3.02 PIPE INSULATION INSTALLATION

A. Install materials in complete and total compliance with the specific manufacturer's installation instructions.

B. Continue vapor barrier through wall and floor penetrations.

C. In exposed piping, locate insulation and cover seams in least visible locations.

D. Insulate fittings, valves, flanges and strainers. On flexible connections, expansion joints and unions, bevel and seal ends of insulation and continue sealant a minimum of 4 inches along the piping.

E. Provide dams in insulation at intervals not to exceed 20 feet to prevent migration of condensation or leakage.

F. Provide an insert of same thickness and contour as adjoining insulation, between support shield and piping, and under the finish jacket, on piping 2 1/2 inch diameter or larger, to prevent insulation form sagging at support points. Provide inserts for 180-degree arc and not less than the length of the pipe support shield or minimum 12 inches long (whichever is greater) manufactured of 5.0# density cellular phenolic insulation material suitable for the planned temperature range. Factory fabricated inserts with integral galvanized pipe saddles are recommended. Adhere pipe support shield to insulation with adhesive.

G. Neatly finish and seal insulation at supports, protrusions and interruptions. Maintain vapor barrier with finish coat.

H. Paint exposed pipe insulation in total compliance with Section 210553 and Section 090190.

3.03 DUCT SYSTEM INSULATION

A. Insulate all supply, return fresh-air, outside-air, make-up air and exhaust ducts.

B. Cold Ducts: Temperatures below the space dew point shall have the insulation vapor barrier be continuous and unbroken through inside walls, sleeves and floor openings. Where connection is made to fire or fire/smoke damper in wall or floor the vapor barrier must extend to the wall or floor to prevent ambient air water vapor from condensing on the cold surfaces of the fire damper.

C. Duct Wrap: Fasten all longitudinal and circumferential laps with outward clinching staples 3" on center. On rectangular ducts over 24" wide, apply as above and hold insulation in place on bottom side with mechanical pins and clips on 12" centers.

D. Duct Wrap: Seal all joints, fastener penetrations and other breaks in vapor barrier with 3-inch-wide strips of white glass fabric embedded between two coats of vapor barrier mastic, Childers CP-30 or approved equal.

E. Cold Duct (Below Ambient Temperature):

1. Application Requirements: Insulate the following cold duct:

a. Outdoor air intake duct between air entrance and fan inlet or HVAC unit inlet.

b. HVAC supply duct between fan discharge, or HVAC unit discharge, and room terminal outlet.

1) Insulate neck, backside, and bells of supply diffusers.

c. HVAC return duct between room terminal inlet and return fan inlet, or HVAC unit inlet.

d. HVAC plenums and unit housings not pre-insulated at factory or lined.

e. Exhaust duct work within the building non air-conditioned spaces.

2. Insulate each duct system specified above with one of the following types and thicknesses of insulation:

a. Rigid Fiberglass: 2" thick, 3.0 PCF density, for both supply and exhaust round ducts exposed outdoor locations, or spaces without ceilings. Round duct insulation shall be E. O. Wood Rigid wrap® for all round ducts in areas without ceiling.

b. Flexible Fiberglass: 2" thick, 1.0 PCF density, minimum R-6 with foil faced continuous vapor barrier. This application is limited to concealed indoor locations only.

c. Foamglass: two (2) layers of 1" thick insulation blocks or 2" thick Armstrong Type II Armaflex flexible elastomeric closed cell sheet insulation or approved equal. (For outdoors locations).

d. Exhaust ductwork within the air-conditioned spaces do not require to be insulated. Exhaust duct on roof exposed to the outside weather do not require to be insulated.

3.04 INSTALLATION

A. Install materials in accordance with manufacturer's instructions.

B. Insulated ductwork conveying air below ambient temperature:

1. Provide insulation with vapor barrier jackets.

2. Finish with tape and vapor barrier jacket.

3. Continue insulation through walls, sleeves, hangers, and other duct penetrations.

4. Insulate entire system including fittings, joints, flanges, fire dampers, flexible connections, and expansion joints.

C. Insulated ductwork conveying air above ambient temperature:

1. Provide with or without standard vapor barrier jacket.

2. Insulate fittings and joints. Where service access is required, bevel and seal ends of insulation.

D. For ductwork exposed in finished spaces.

1. Double wall duct and fittings will consist of a solid inner liner, 1" thick x 1.0 lb/ft3 layer of glass fiber insulation, and a solid outer pressure shell.

2. Double wall jacket with spiral lockseam with standing rib.

3. Fitting ends shall be sized to slip-fit into spiral duct of the same nominal size.

E. External / Outdoor Duct Insulation Application:

1. Secure insulation with vapor barrier with wires and seal jacket joints with vapor barrier adhesive to match jacket.

2. Secure insulation without vapor barrier with staples, tape, or wires.

3. Install without sag on underside of ductwork. Use adhesive or mechanical fasteners where necessary to prevent sagging. Lift ductwork off trapeze hangers and insert spacers.

4. Seal vapor barrier penetrations by mechanical fasteners with vapor barrier adhesive.

5. Stop and point insulation around access doors and damper operators to allow operation without disturbing wrapping.

6. Install 0.02” thick smooth Stainless steel jacket on ductwork installed outdoors / on roof.

F. The sound control lagging material is critical in order to achieve the desired noise reduction. Sound control lagging material shall be cut to length, wrapped around the outside of the duct, and fastened with mechanical fasteners or bands. Tape and adhesive can be used in conjunction with mechanical fasteners or bands. All sound control lagging materials must be installed per the manufacturer’s installation guidelines.

G. Duct and Plenum Liner Application:

1. Adhere insulation with adhesive for 100 percent coverage.

2. Secure insulation with mechanical liner fasteners. Refer to SMACNA Standards for spacing.

3. Seal and smooth joints.

4. Seal liner surface penetrations with adhesive.

5. Duct dimensions indicated are net inside dimensions required for air flow. Increase duct size to allow for insulation thickness.

H. All piping, equipment, ductwork, all plenums including metal and masonry construction, fans, etc., shall be insulated as indicated on the Drawings, as specified herein, and as required for a complete system. In each case, the insulation shall be equal to that specified and materials applied and finished as described in these Specifications.

I. All insulation shall be applied by mechanics skilled in this particular work and regularly engaged in such occupation. All insulation shall be applied in strict accordance with these Specifications and with factory printed recommendations on items not herein mentioned. Unsightly, inadequate, or sloppy work will not be acceptable, and all such work shall be removed and replaced as many times as necessary to achieve an acceptable installation.

J. All insulation, jacket, adhesives, mastics, sealers, etc., utilized in the fabrication of these systems shall meet NFPA for fire resistant ratings (maximum of 25 flame spread and 50 smoke developed ratings) and shall be approved by the insulation manufacturer for guaranteed performances when incorporated into their insulation system, unless a specific product is specified for a specific application, and is stated as an exception to this requirement. Certificates to this effect shall be submitted along with Contractor's submittal data for this section of the Specifications. No material may be used that, when tested by the ASTM E84-89 test method, is found to melt, drip or delaminate to such a degree that the continuity of the flame front is destroyed, thereby resulting in an artificially low flame spread rating.

K. All surfaces to be insulated shall be clean and dry before applying the insulation. All sections of molded pipe covering shall be firmly butted together. Where an insulation covering is applied, it shall lap the adjoining section of insulation by at least three inches (3"). Where insulation terminates, it shall be neatly beveled and finished. No insulation shall be applied until the pipe, duct, etc., have been pressure tested and found tight. Piping, flexible connections, flanges, valves, strainers, and unions shall be covered unless specifically noted otherwise. Flexible connections on duct shall not be covered. All materials used shall be fire retardant or nonflammable.

L. Where vapor barriers are required, the vapor barrier shall be on the outside. Extreme care shall be taken that the vapor barrier is unbroken. Joints, etc., shall all be sealed. Where insulation with a vapor barrier terminates, it shall be sealed off with the vapor barrier being continuous to the surface being insulated. Ends shall not be left raw.

M. Extreme care shall be taken in covering high and medium pressure (high and medium pressure ductwork shall be all ductwork between the fan discharge and all mixing boxes) ductwork to insure the duct is not pierced with sheet metal screws or other fasteners. All high and medium pressure ducts in these specifications are classified as high velocity ductwork.

N. Where specified, aluminum bands shall be used on piping insulation. The bands shall be applied three (3) to a section of pipe. Fittings, valves, etc., shall have bands on each side.

O. For purpose of definition in this Specification: "concealed" areas are those areas which cannot be seen by the building occupants, and "exposed" areas are all areas which are exposed to view by the building occupants, including under counter and inside cabinet areas, plus all mechanical rooms.

P. Provide 2 hour enclosure on grease exhaust duct. Enclosure shall extend from kitchen hood to underside of roof deck.

Q. The handling and installation of all insulation materials shall be performed in strict accordance with the manufacturer's recommendations.

3.05 SCHEDULE

A.

Duct or Piping	Type	Duct / Pipe Size	Insulation Thickness
Condensate Drain Lines (Interior Exposed)	B-1	All Sizes	1"
Refrigerant Suction Piping	B-1	2" & Smaller	1 ½ "
Indoor ductwork Insulation Concealed Spaces	C	All sizes	2" & 1.0 lbs. density
All ductwork downstream from the VAV terminal units	L	All ducts All sizes	1" thick & 2 lbs. density.
Acoustical ductwork Liner In Transfer Ducts and Return Boots	F	All sizes	2" & 1.5 lbs density
Indoor ductwork Insulation Non-concealed Spaces Provide Aluminum Jacket	D	All sizes	2" & 3.0 lbs density
Outdoor Ductwork Insulation Provide 0.020"x 36" smooth Stainless steel Jacket	E	All sizes	two (2) layers of rigid 1 " thick, and 7.3 lbs/ft3 density

END OF SECTION

23 07 16

EQUIPMENT INSULATION

PART 1 - GENERAL

1.01 SECTION INCLUDES

A. Retain or delete this article in all Sections of Project Manual.

B. Equipment insulation.

C. Covering.

1.02 RELATED SECTIONS

A. Section 090190 – Maintenance of Painting and Coatings.

A. Section 232123 – Centrifugal Hydronic Pumps.

B. Section 230553 – Identification for HVAC Piping and Equipment.

C. Section 013300 Submittals.

D. Section 01524 Construction Waste Management

E. Section 01352 LEED Requirements

F. Section 01611 Environmental Management

G. Section 01570 Pollution Prevention and Control

1.03 REFERENCES

A. First four paragraphs below are defined in Division 01 Section "Submittal Procedures" as "Action Submittals."

A. ASTM C 195 – Mineral Fiber Thermal Insulation Cement.

B. ASTM C 533 – Calcium Silicate Block and Pipe Thermal Insulation.

C. ASTM C 534 - Preformed Flexible Elastomeric Cellular Thermal Insulation.

D. ASTM C 553 – Mineral Fiber Blanket and Felt Insulation.

E. ASTM C 591 – Preformed Cellular Polyurethane Thermal Insulation.

F. ASTM C 612 – Mineral Fiber Block and Thermal Insulation.

G. ASTM C 1126 – Rigid Cellular Phenolic Thermal Insulation.

H. ASTM E 84 – Surface Burning Characteristics of Building Materials.

I. ASTM 255 – Surface Burning Characteristics of Building Materials.

J. UL 723 – Surface Burning Characteristics of Building Materials.

1.04 SUBMITTALS

A. Include product description, list of materials, and thickness for equipment scheduled.

B. Product data. Unless otherwise indicated, submit the following for each type of product provided under work of this Section:

1. Recycled Content:

   a. Indicate recycled content; indicate percentage of pre-consumer and post-consumer recycled content per unit of product.

2. Local/Regional Materials:

   a. Indicate location of manufacturing facility; indicate distance between manufacturing facility and the project site.

   b. Indicate location of extraction, harvesting, and recovery; indicate distance between extraction, harvesting, and recovery and the project site.

3. VOC data:

   a. Submit manufacturer's product data for joint compounds. Indicate VOC and chemical component limits of the product. Submit MSDS highlighting VOC and chemical component limits. VOC contents and chemical component limits must be less than the limits of Green Seal’s Standard GS-11.

   b. Submit manufacturer’s certification that products comply with Green Seal’s Standard GS-11

   c. Submit environmental data in accordance with Table 1 of ASTM E2129 for products provided under work of this Section.

4. Submit the following according to Conditions of the Construction Contract.

   a. Product data. Unless otherwise indicated, submit the following for each type of product provided under work of this Section:

5. General: Submit additional LEED submittal requirements included in other sections of the Specifications.

6. LEED submittals are in addition to other submittals. If submitted item is identical to that submitted to comply with other requirements, submit duplicate copies as a separate submittal to verify compliance with indicated LEED requirements.

1.05 QUALITY ASSURANCE

A. Application Company Qualifications: The installing company must be solely and exclusively in the business of insulation installation for the previous consecutive fiver year period. The installing company must also be regularly engaged in installing the specific specified insulation material types on projects of equal or greater magnitude and scope as this project for the previous consecutive five year period. Documentation of the above listed requirements must be submitted prior to insulation material submitted.

A. Application Personnel Qualifications: The installing company must provide qualified installation personnel on this project jobsite directly employed by them who are skilled and proficient at installing the specific specified insulation Material types.

B. Any material found, by the A/E, to be improperly installed or not installed in total compliance with the specific installation instructions and methods (written or implied) of the material manufacturer must be removed by the installing company. The preparation instructions must be followed prior to the re-installation of the insulation material using the correct installation instructions and methods of the material manufacturer.

C. All material (to include, but not limited to, insulation, jackets, facings, coatings, mastics, adhesive, sealants, etc.) Installed inside the building must have a certified and tested composite flame spread/smoke developed rating of 25/50 in accordance with ASTM E84.

1.06 ENVIRONMENTAL REQUIREMENTS

A. Maintain ambient temperatures and conditions required by manufacturers of adhesive and insulation.

A. Insulation to provide minimum R-Value in accordance with International Energy Conservation Code with Houston Amendment.

PART 2 - PRODUCTS

2.01 ENVIRONMENTALLY PREFERABLE PRODUCTS

A. Provide environmentally preferable products to the greatest extent possible.

1. To the greatest extent possible, provide products and materials that promote stewardship of the earth's resources, promote good indoor environmental quality (IEQ), and promote efficiencies in operational performance.

B. Provide products listed on the EPA Comprehensive Procurement Guidelines to the greatest extent practicable.

C. Provide products listed on the USGBC Directory of Products and Services to the greatest extent possible.

2.02 RECYCLED CONTENT

A. Provide recycled content products to the greatest extent possible.

1. To the greatest extent possible, provide materials with recycled content such that the sum of post-consumer recycled content plus one-half of the post-industrial content constitutes at least 10% of the total value of the materials in the project.

2.03 REGIONAL MATERIALS

A. Provide Regional materials and products to the greatest extent possible that are extracted and manufactured within the region.

1. Provide materials and products that use a minimum of 20 % of building products that are manufactured regionally within a radius of 500 miles from the project site.

a. Manufacturing refers to the final assembly of components into the building product that is furnished and installed by the tradesman.

2. Of the regionally manufactured materials used and documented, use a minimum of 50% of building materials and products that are extracted, harvested or recovered (as well as manufactured) within 500 miles of the project site.

2.04 MANUFACTURERS

A. Owens-Corning Fiberglass Corporation.

B. UpJohn CPR/ Dow Chemical Company.

C. Manville Corporation.

D. Armstrong.

2.05 INSULATION

A. Type A: Mineral fiber or fiberglass preformed insulation: ASTM C 553; ‘k’ value of 0.24 at 75 degrees F; 2.0 lb/ cu ft. density.

B. Type B: Rigid fiberglass or mineral fiber board; ASTM C 612; ‘k’ value of 0.24 at 75 degrees F; 6.0 lb/ cu ft. density.

C. Type C: Molded closed cell poyisocyanurate insulation; ASTM E96, maximum water vapor transmission rating of 0.005 perm-in; ASTM C177, ‘k’ value of 0.18 at 75˚F; ASTM D2842m water absorption value of 0.05 lb/ft².

D. Type D: Calcium silicate; ASTM C 533; asbestos free; ‘k’ value of 0.40 at 250 degrees F.

E. Type E: Closed cell, chemically neutral, neoprene insulation, ‘k’ value of 0.27 at 75 degrees F; sheet form; Armstrong Armaflex.

F. Type F: Phenolic closed cell, ASTM C1126 rigid foam, 3.5 labs. Nominal density, CFC free; ASTM C177, ‘k’ value of 0.18 at 75□F.

2. 1 INSULATION METAL JACKET

G. Provide Metal Jacket outdoors.

H. Jacket - .016”x 36” aluminum smooth with moister barrier jacket.

I. Jacket - .020” x 36” aluminum smooth with moister barrier jacket (High traffic areas.).

J. Aluminum fasteners – ¾” bands, ¾” wing seals .024 elbow covers.

K. T-304 stainless steel fasteners – ½” x .020 bands, ½” wing seals.

L. Screws are not to be used to secure jacketing.

2.06 ACCESSORIES

A. Adhesives: Non-shrinking, permanently flexible, compatible with insulation. For general purpose use Childers CP-82 adhesive. For calcium silicate, use Childers CP-97 fibrous adhesive.

B. Sealants: For general purpose to seal the end of the insulation, use Childers CP-30 L.O. sealant.

C. Insulating Cement: ASTM C 195; hydraulic setting mineral wool; Ryder One-Coat.

D. Wire Mesh: Corrosive-resistant metal; 1 inch hexagonal pattern.

E. Primers: Use Childers CP-50 diluted 50% with water primer to seal over insulating cements and fibrous adhesives prior to finish coating.

F. Finish Coats: For general purpose, use Childers CP-30 L.O. reinforce with glass cloth. For calcium silicate, use Childers CP-50 finish coat reinforced with canvas jacket. For finish coat over closed cell electrometric, use Childers CP-17 or Armstrong “Finish” acrylic finish.

G.

PART 3 - EXECUTION

3.01 INSTALLATION

A. Install materials in accordance with manufacturer’s installation instructions.

B. Do not insulate factory insulated equipment.

C. Do not insulate boiler or expansion or volume tank manholes, hand holes, cleanouts, ASME stamp, and manufacturer's nameplate. Provide neatly beveled edge at interruptions of insulation. Provide removable insulation sections to cover parts of equipment which must be opened periodically for maintenance; include metal vessel covers, fasteners, flanges, frames and accessories.

D. Apply insulation as close as possible to equipment by grooving, scoring, and beveling insulation, if necessary. Secure insulation to equipment with studs, pins, clips, adhesive, wires or bands.

E. Fill joints, cracks, seams, and depressions with bedding compound to form smooth surface. On cold equipment, use vapor barrier cement.

F. Cover insulation with metal mesh and finish with heavy coat of insulating cement.

G. Do not insulate over nameplate or ASME stamps. Bevel and seal insulation around such.

H. When equipment with insulation requires periodical opening for maintenance, repair, or cleaning, install insulation in such a manner that it can be easily removed and replaced without damage.

3.02 INSTALLATION

A. Install materials in accordance with manufacturer's instructions.

B. Do not insulate factory insulated equipment.

C. On exposed equipment, locate insulation and cover seams in least visible locations.

D. Apply insulation close to equipment by grooving, scoring, and beveling insulation. Secure insulation to equipment with studs, pins, clips, adhesive, wires, or bands.

E. Fill joints, cracks, seams, and depressions with bedding compound to form smooth surface. On cold equipment, use vapor barrier cement.

F. Insulated dual temperature equipment or cold equipment containing fluids below ambient temperature:

1. Provide vapor barrier jackets, factory applied or field applied.
2. Finish with glass cloth and vapor barrier adhesive.
3. Insulate entire system.

G. For insulated equipment containing fluids above ambient temperature:

1. Provide standard jackets, with or without vapor barrier, factory applied or field applied.
2. Finish with glass cloth and adhesive.
3. For hot equipment containing fluids 140 degrees F or less, do not insulate flanges and unions, but bevel and seal ends of insulation.
4. For hot piping conveying fluids over 140 degrees F, insulate flanges and unions, including those at equipment, but label the insulation to indicate a concealed flange or union.

H. Inserts and Shields:

1. Application: Equipment 2 inches diameter or larger.
2. Shields: Galvanized steel between hangers and inserts.
3. Insert location: Between support shield and equipment and under the finish jacket.
4. Insert configuration: Minimum 6 inches (150 mm) long, of same thickness and

contour as adjoining insulation; may be factory fabricated.

5. Insert material: Heavy density insulating material suitable for the planned temperature range.

I. Finish insulation at supports, protrusions, and interruptions.

J. For equipment in mechanical equipment rooms or in finished spaces, finish with aluminum jacket.

K. For exterior applications, provide vapor barrier jacket or finish with glass mesh reinforced vapor barrier cement. Cover with aluminum jacket with seams located on bottom side of horizontal equipment.

L. Cover cellular glass and cellular foam insulation with aluminum jacket.

M. Do not insulate over any nameplate or ASME stamps. Bevel and seal insulation around such.

N. Install insulation for equipment requiring access for maintenance, repair, or cleaning, in such a manner that it can be easily removed and replaced without damage.

O. All piping, equipment, ductwork, all plenums including metal and masonry construction, fans, etc., shall be insulated as indicated on the Drawings, as specified herein, and as required for a complete system. In each case, the insulation shall be equal to that specified and materials applied and finished as described in these Specifications.

P. All insulation shall be applied by mechanics skilled in this particular work and regularly engaged in such occupation. All insulation shall be applied in strict accordance with these Specifications and with factory printed recommendations on items not herein mentioned. Unsightly, inadequate, or sloppy work will not be acceptable, and all such work shall be removed and replaced as many times as necessary to achieve an acceptable installation.

Q. All insulation, jacket, adhesives, mastics, sealers, etc., utilized in the fabrication of these systems shall meet NFPA for fire resistant ratings (maximum of 25 flame spread and 50 smoke developed ratings) and shall be approved by the insulation manufacturer for guaranteed performances when incorporated into their insulation system, unless a specific product is specified for a specific application, and is stated as an exception to this requirement. Certificates to this effect shall be submitted along with Contractor's submittal data for this section of the Specifications. No material may be used that, when tested by the ASTM E84-89 test method, is found to melt, drip or delaminate to such a degree that the continuity of the flame front is destroyed, thereby resulting in an artificially low flame spread rating.

R. All surfaces to be insulated shall be clean and dry before applying the insulation. All sections of molded pipe covering shall be firmly butted together. Where an insulation covering is applied, it shall lap the adjoining section of insulation by at least three inches (3"). Where insulation terminates, it shall be neatly beveled and finished. <u>No insulation shall be applied until the pipe, duct, etc., have been pressure tested and found tight</u>. Piping, flexible connections, flanges, valves, strainers, and unions shall be covered unless specifically noted otherwise. Flexible connections on duct shall not be covered. All materials used shall be fire retardant or nonflammable. Refer to Section 15A.

S. Where vapor barriers are required, the vapor barrier shall be on the outside. Extreme care shall be taken that the vapor barrier is unbroken. Joints, etc., shall all be sealed. Where insulation with a vapor barrier terminates, it shall be sealed off with the vapor barrier being continuous to the surface being insulated. Ends shall not be left raw.

T. Extreme care shall be taken in covering high and medium pressure (high and medium pressure ductwork shall be all ductwork between the fan discharge and all mixing boxes) ductwork to insure the duct is not pierced with sheet metal screws or other fasteners. All high and medium pressure ducts in these specifications are classified as high velocity ductwork.

U. Where specified, aluminum bands shall be used on piping insulation. The bands shall be applied three (3) to a section of pipe. Fittings, valves, etc., shall have bands on each side.

V. Where canvas finish is specified, use Arabol lagging adhesive to prevent mildew in securing canvas. Do not use wheat paste. In addition, cover all canvas insulation with a fire retardant coating.

W. For purpose of definition in this Specification: "concealed" areas are those areas which cannot be seen by the building occupants, and "exposed" areas are all areas which are exposed to view by the building occupants, including under counter and inside cabinet areas, plus all mechanical rooms.

X. The handling and installation of all insulation materials shall be performed in strict accordance with the manufacturer’s recommendations.

3.03 SCHEDULE

Equipment	Type	Insulation Thickness
Hot Expansion Tanks Provide aluminum Jacket	E	2”
Chilled Water Expansion Tanks Provide aluminum Jacket	E	2”
Air Separators	E	1”
Heat exchanger Provide aluminum Jacket	D	2 1/2”
Cold Surfaces (Not Factory Insulated)	E	1 ½ ”
Chilled and Hot Water Pump Bodies Provide aluminum Jacket	E	2”
Chemical Feed (Chilled/Hot Water)	E	3/4”

END OF SECTION 23 07 16

SECTION 230719

HVAC PIPING INSULATION

PART 1 - GENERAL

1.01 RELATED DOCUMENTS

A. Drawings and general provisions of the Contract, including General and Supplementary Conditions and Division 01 Specification Sections, apply to this Section.

1.02 SUMMARY

A. Section includes insulation for HVAC piping systems.

B. Related Requirements:

1. Section 230713 "Duct Insulation" for duct insulation.

2. Section 230716 "HVAC Equipment Insulation" for equipment insulation.

3. Section 232113.13 "Underground Hydronic Piping" loose-fill pipe insulation in underground piping outside the building.

4. Section 232213.13 "Underground Steam and Condensate Heating Piping" for steam and condensate piping for steam-type tank heaters.

1.03 ACTION SUBMITTALS

A. Product Data: For each type of product. Include thermal conductivity, water-vapor permeance thickness, and jackets (both factory and field applied if any).

B. Shop Drawings: Include plans, elevations, sections, details, and attachments to other work.

1. Detail application of protective shields, saddles, and inserts at hangers for each type of insulation and hanger.

2. Detail attachment and covering of heat tracing inside insulation.

3. Detail insulation application at pipe expansion joints for each type of insulation.

4. Detail insulation application at elbows, fittings, flanges, valves, and specialties for each type of insulation.

5. Detail removable insulation at piping specialties.

6. Detail application of field-applied jackets.

7. Detail application at linkages of control devices.

C. Samples: For each type of insulation and jacket indicated. Identify each Sample, describing product and intended use.

1. Preformed Pipe Insulation Materials: 12 inches long by NPS 2.

2. Sheet Form Insulation Materials: 12 inches square.

3. Jacket Materials for Pipe: 12 inches long by NPS 2.

4. Sheet Jacket Materials: 12 inches square.

5. Manufacturer's Color Charts: For products where color is specified, show the full range of colors available for each type of finish material.

1.04 INFORMATIONAL SUBMITTALS

A. Qualification Data: For qualified Installer.

B. Material Test Reports: From a qualified testing agency acceptable to authorities having jurisdiction indicating, interpreting, and certifying test results for compliance of insulation materials, sealers, attachments, cements, and jackets, with requirements indicated. Include dates of tests and test methods employed.

C. Field quality-control reports.

1.05 QUALITY ASSURANCE

A. Installer Qualifications: Skilled mechanics who have successfully completed an apprenticeship program or another craft training program certified by the Department of Labor, Bureau of Apprenticeship and Training.

B. Surface-Burning Characteristics: For insulation and related materials, as determined by testing identical products in accordance with ASTM E84, by a testing agency acceptable to authorities having jurisdiction. Factory label insulation and jacket materials and adhesive, mastic, tapes, and cement material containers, with appropriate markings of applicable testing agency.

1. Insulation Installed Indoors: Flame-spread index of 25 or less, and smoke-developed index of 50 or less.

2. Insulation Installed Outdoors: Flame-spread index of 75 or less, and smoke-developed index of 150 or less.

C. Mockups: Before installing insulation, build mockups for each type of insulation and finish listed below to demonstrate quality of insulation application and finishes. Build mockups in the location indicated or, if not indicated, as directed by Architect. Use materials indicated for the completed Work.

1. Piping Mockups:

a. One 10-foot section of NPS 2 straight pipe.

b. One each of a 90 degree threaded, welded, and flanged elbow.

c. One each of a threaded, welded, and flanged tee fitting.

d. One NPS 2 or smaller valve and one NPS 2-1/2 or larger valve.

e. Four support hangers, including hanger shield and insert.

f. One threaded strainer and one flanged strainer with removable portion of insulation.

g. One threaded reducer and one welded reducer.

h. One pressure temperature tap.

i. One mechanical coupling.

j. One union.

k. <Insert mockup>.

2. For each mockup, fabricate cutaway sections to allow observation of application details for insulation materials, adhesives, mastics, attachments, and jackets.

3. Notify Architect seven days in advance of dates and times when mockups will be constructed.

4. Obtain Architect's approval of mockups before starting insulation application.

5. Approval of mockups does not constitute approval of deviations from the Contract Documents contained in mockups unless Architect specifically approves such deviations in writing.

6. Maintain mockups during construction in an undisturbed condition as a standard for judging the completed Work.

7. Demolish and remove mockups when directed.

1.06 DELIVERY, STORAGE, AND HANDLING

A. Packaging: Insulation material containers shall be marked by manufacturer with appropriate ASTM standard designation, type and grade, and maximum use temperature.

1.07 COORDINATION

A. Coordinate sizes and locations of supports, hangers, and insulation shields specified in Section 230529 "Hangers and Supports for HVAC Piping and Equipment."

B. Coordinate clearance requirements with piping Installer for piping insulation application. Before preparing piping Shop Drawings, establish and maintain clearance requirements for installation of insulation and field-applied jackets and finishes and for space required for maintenance.

C. Coordinate installation and testing of heat tracing.

1.08 SCHEDULING

A. Schedule insulation application after pressure testing systems and, where required, after installing and testing heat tracing. Insulation application may begin on segments that have satisfactory test results.

B. Complete installation and concealment of plastic materials as rapidly as possible in each area of construction.

PART 2 - PRODUCTS

2.01 INSULATION MATERIALS

A. Comply with requirements in "Piping Insulation Schedule, General," "Indoor Piping Insulation Schedule," "Outdoor, Aboveground Piping Insulation Schedule," and "Outdoor, Underground Piping Insulation Schedule" articles for where insulating materials shall be applied.

B. Products shall not contain asbestos, lead, mercury, or mercury compounds.

C. Products that come into contact with stainless steel shall have a leachable chloride content of less than 50 ppm when tested in accordance with ASTM C871.

D. Insulation materials for use on austenitic stainless steel shall be qualified as acceptable in accordance with ASTM C795.

E. Foam insulation materials shall not use CFC or HCFC blowing agents in the manufacturing process.

F. Calcium Silicate: Preformed Pipe Sections: Flat-, curved-, and grooved-block sections of noncombustible, inorganic, hydrous calcium silicate with a non-asbestos fibrous reinforcement. Comply with ASTM C533, Type I.

1. Prefabricated Fitting Covers: Comply with ASTM C450 and ASTM C585 for dimensions used in preforming insulation to cover valves, elbows, tees, and flanges.

G. Cellular Glass: Inorganic, incombustible, foamed or cellulated glass with annealed, rigid, hermetically sealed cells. Comply with ASTM C552.

1. Preformed Pipe Insulation without Jacket: Type II, Class 1, without jacket.

2. Preformed Pipe Insulation with Jacket: Type II, Class 2, with factory-applied ASJ-SSL jacket.

3. Factory fabricate shapes in accordance with ASTM C450 and ASTM C585.

4. Factory-applied jacket requirements are specified in "Factory-Applied Jackets" Article.

H. Flexible Elastomeric: Closed-cell, sponge- or expanded-rubber materials. Comply with ASTM C534/C534M, Type I for tubular materials, Type II for sheet materials.

I. Mineral-Fiber, Preformed Pipe: Mineral or glass fibers bonded with a thermosetting resin. Comply with ASTM C547.

1. Preformed Pipe Insulation: Type I, Grade A with factory-applied ASJ-SSL.
2. 850 deg F.
3. Factory fabricate shapes in accordance with ASTM C450 and ASTM C585.
4. Factory-applied jacket requirements are specified in "Factory-Applied Jackets" Article.

J. Mineral-Fiber, Pipe and Tank: Mineral or glass fibers bonded with a thermosetting resin. Comply with ASTM C1393.

1. Semirigid board material with factory-applied FSK jacket.
2. Nominal density is 2.5 lb/cu. ft. or more.
3. Thermal conductivity (k-value) at 100 deg F is 0.29 Btu x in./h x sq. ft. x deg F or less.
4. Factory-applied jacket requirements are specified in "Factory-Applied Jackets" Article.

K. Phenolic: Preformed pipe insulation of rigid, expanded, closed-cell structure. Comply with ASTM C1126.

1. Preformed Pipe Insulation: Type III with factory-applied ASJ.
2. Factory fabricate shapes in accordance with ASTM C450 and ASTM C585.
3. Factory-applied jacket requirements are specified in "Factory-Applied Jackets" Article.

L. Polyisocyanurate: Preformed, rigid cellular polyisocyanurate material intended for use as thermal insulation. Comply with ASTM C591.

1. Preformed insulation with factory-applied ASJ-SSL.
2. Type IV, except thermal conductivity (k-value) shall not exceed 0.19 Btu x in./h x sq. ft. x deg F at 75 deg F after 180 days of aging.
3. Flame-spread index shall be 25 or less, and smoke-developed index shall be 50 or less for thicknesses of up to 1 inch as tested in accordance with ASTM E84.
4. Fabricate shapes in accordance with ASTM C450 and ASTM C585.
5. Factory-applied jacket requirements are specified in "Factory-Applied Jackets" Article.

M. Polyolefin: Unicellular, polyethylene thermal plastic insulation. Comply with ASTM C534/C534M or ASTM C1427, Type I, Grade 1, for tubular materials and with Type II, Grade 1, for sheet materials.

N. Polystyrene: Rigid, extruded cellular polystyrene intended for use as thermal insulation. Comply with ASTM C578, Type IV or Type XIII, except thermal conductivity (k-value) shall not exceed 0.26 Btu x in./h x sq. ft. x deg F after 180 days of aging. Fabricate shapes in accordance with ASTM C450 and ASTM C585.

2.02 INSULATING CEMENTS

A. Mineral-Fiber Insulating Cement: Comply with ASTM C195.

B. Expanded or Exfoliated Vermiculite Insulating Cement: Comply with ASTM C196.

C. Mineral-Fiber, Hydraulic-Setting Insulating and Finishing Cement: Comply with ASTM C449.

2.03 ADHESIVES

A. Materials shall be compatible with insulation materials, jackets, and substrates and for bonding insulation to itself and to surfaces to be insulated unless otherwise indicated.

B. Calcium Silicate Adhesive: Fibrous, sodium-silicate-based adhesive with a service temperature range of 50 to 800 deg F.

C. Cellular-Glass Adhesive: Two-component, thermosetting urethane adhesive containing no flammable solvents, with a service temperature range of minus 100 to plus 200 deg F.

D. Phenolic and Polyisocyanurate Adhesive: Solvent-based resin adhesive, with a service temperature range of minus 75 to plus 300 deg F.

E. Flexible Elastomeric and Polyolefin Adhesive: Solvent-based adhesive.

1. Flame-spread index shall be 25 or less and smoke-developed index shall be 50 or less as tested in accordance with ASTM E84.

2. Wet Flash Point: Below 0 deg F.

3. Service Temperature Range: 40 to 200 deg F.

4. Color: Black.

F. Mineral-Fiber Adhesive: Comply with MIL-A-3316C, Class 2, Grade A.

G. Polystyrene Adhesive: Solvent- or water-based, synthetic resin adhesive with a service temperature range of minus 20 to plus 140 deg F.

H. ASJ Adhesive and FSK and PVDC Jacket Adhesive: Comply with MIL-A-3316C, Class 2, Grade A, for bonding insulation jacket lap seams and joints.

I. PVC Jacket Adhesive: Compatible with PVC jacket.

2.04 MASTICS AND COATINGS

A. Materials shall be compatible with insulation materials, jackets, and substrates.

B. Vapor-Retarder Mastic, Water Based: Suitable for indoor use on below-ambient services.

1. Water-Vapor Permeance: Comply with ASTM E96/E96M or ASTM F1249.

2. Service Temperature Range: 0 to plus 180 deg F.

3. Comply with MIL-PRF-19565C, Type II, for permeance requirements[, with supplier listing on DOD QPD - Qualified Products Database.

4. Color: White.

C. Vapor-Retarder Mastic, Solvent Based, Indoor Use: Suitable for indoor use on below-ambient services.

1. Water-Vapor Permeance: Comply with ASTM E96/E96M or ASTM F1249.

2. Service Temperature Range: 0 to 180 deg F.

3. Color: White.

D. Vapor-Retarder Mastic, Solvent Based, Outdoor Use: Suitable for outdoor use on below-ambient services.

1. Water-Vapor Permeance: Comply with ASTM E96/E96M or ASTM F1249.

2. Service Temperature Range: 0 to plus 220 deg F.

3. Color: White.

E. Breather Mastic: Water based; suitable for indoor and outdoor use on above-ambient services.

1. Water-Vapor Permeance: ASTM E96/E96M, greater than 1.0 perm at manufacturer's recommended dry film thickness.

2. Service Temperature Range: 0 to plus 180 deg F.

3. Color: White.

2.05 LAGGING ADHESIVES

A. Adhesives shall comply with MIL-A-3316C, Class I, Grade A, and shall be compatible with insulation materials, jackets, and substrates.

1. Fire-resistant, water-based lagging adhesive and coating for use indoors to adhere fire-resistant lagging cloths over pipe insulation.

2. Service Temperature Range: 0 to plus 180 deg F.

3. Color: White.

2.06 SEALANTS

A. Materials shall be as recommended by the insulation manufacturer and shall be compatible with insulation materials, jackets, and substrates.

B. Joint Sealants:

1. Permanently flexible, elastomeric sealant.

a. Service Temperature Range: Minus 100 to plus 300 deg F.

b. Color: White or gray.

C. FSK and Metal Jacket Flashing Sealants:

1. Fire- and water-resistant, flexible, elastomeric sealant.

2. Service Temperature Range: Minus 40 to plus 250 deg F.

3. Color: Aluminum.

D. ASJ Flashing Sealants and PVDC and PVC Jacket Flashing Sealants:

1. Fire- and water-resistant, flexible, elastomeric sealant.

2. Service Temperature Range: Minus 40 to plus 250 deg F.

3. Color: White.

2.07 FACTORY-APPLIED JACKETS

A. Insulation system schedules indicate factory-applied jackets on various applications. When factory-applied jackets are indicated, comply with the following:

1. ASJ: White, kraft-paper, fiberglass-reinforced scrim with aluminum-foil backing; complying with ASTM C1136, Type I.

2. ASJ-SSL: ASJ with self-sealing, pressure-sensitive, acrylic-based adhesive covered by a removable protective strip; complying with ASTM C1136, Type I.

3. FSK Jacket: Aluminum-foil, fiberglass-reinforced scrim with kraft-paper backing; complying with ASTM C1136, Type II.

2.08 FIELD-APPLIED REINFORCING MESH

A. Woven Glass-Fiber Mesh: Approximately 2 oz./sq. yd. with a thread count of 10 strands by 10 strands/sq. in. for covering pipe and pipe fittings.

B. Woven Polyester Mesh: Approximately 1 oz./sq. yd. with a thread count of 10 strands by 10 strands/sq. in., in a Leno weave, for pipe.

2.09 FIELD-APPLIED CLOTHS

A. Woven Glass-Fiber Cloth: Comply with MIL-C-20079H, Type I, plain weave, and presized a minimum of 8 oz./sq. yd..

2.10 FIELD-APPLIED JACKETS

A. Field-applied jackets shall comply with ASTM C1136, Type I, unless otherwise indicated.

B. FSK Jacket: Aluminum-foil-face, fiberglass-reinforced scrim with kraft-paper backing.

C. PVC Jacket: High-impact-resistant, UV-resistant PVC complying with ASTM D1784, Class 16354-C; thickness as scheduled; roll stock ready for shop or field cutting and forming. Thickness is indicated in field-applied jacket schedules.

1. Adhesive: As recommended by jacket material manufacturer.

2. Color: Color-code jackets based on system. Color as selected by Architect.

3. Factory-fabricated fitting covers to match jacket if available; otherwise, field fabricate.

a. Shapes: 45- and 90-degree, short- and long-radius elbows, tees, valves, flanges, unions, reducers, end caps, soil-pipe hubs, traps, mechanical joints, and P-trap and supply covers for lavatories.

D. Metal Jacket:

1. Aluminum Jacket: Comply with ASTM B209, Alloy 3003, 3005, 3105, or 5005, Temper H-14.

a. Sheet and roll stock ready for shop or field sizing.

b. Finish and thickness are indicated in field-applied jacket schedules.

c. Moisture Barrier for Indoor Applications: 3-mil-thick, heat-bonded polyethylene and kraft paper.

d. Moisture Barrier for Outdoor Applications: 3-mil-thick, heat-bonded polyethylene and kraft paper.

e. Factory-Fabricated Fitting Covers:

1) Same material, finish, and thickness as jacket.

2) Preformed two-piece or gore, 45- and 90-degree, short- and long-radius elbows.

3) Tee covers.

4) Flange and union covers.

5) End caps.

6) Beveled collars.

7) Valve covers.

8) Field fabricate fitting covers only if factory-fabricated fitting covers are not available.

2. Stainless Steel Jacket: ASTM A240/A240M.

a. Sheet and roll stock ready for shop or field sizing.

b. Material, finish, and thickness are indicated in field-applied jacket schedules.

c. Moisture Barrier for Indoor Applications: 3-mil-thick, heat-bonded polyethylene and kraft paper.

d. Moisture Barrier for Outdoor Applications: 3-mil-thick, heat-bonded polyethylene and kraft paper.

e. Factory-Fabricated Fitting Covers:

1) Same material, finish, and thickness as jacket.

2) Preformed two-piece or gore, 45- and 90-degree, short- and long-radius elbows.

3) Tee covers.

4) Flange and union covers.

5) End caps.

6) Beveled collars.

7) Valve covers.

8) Field fabricate fitting covers only if factory-fabricated fitting covers are not available.

E. Underground Direct-Buried Jacket: 125-mil-thick vapor barrier and waterproofing membrane, consisting of a rubberized bituminous resin reinforced with a woven-glass fiber or polyester scrim and laminated aluminum foil.

F. Self-Adhesive Outdoor Jacket: 60-mil-thick, laminated vapor barrier and waterproofing membrane for installation over insulation located aboveground outdoors; consisting of a rubberized bituminous resin on a cross-laminated polyethylene film covered with white aluminum-foil facing.

G. PVDC Jacket for Indoor Applications: 4-mil-thick, white PVDC biaxially oriented barrier film with a permeance at 0.02 perm when tested in accordance with ASTM E96/E96M and with a flame-spread index of 10 and a smoke-developed index of 20 when tested in accordance with ASTM E84.

H. PVDC Jacket for Outdoor Applications: 6-mil-thick, white PVDC biaxially oriented barrier film with a permeance at 0.01 perm when tested in accordance with ASTM E96/E96M and with a flame-spread index of 25 and a smoke-developed index of 50 when tested in accordance with ASTM E84.

I. PVDC-SSL Jacket: PVDC jacket with a self-sealing, pressure-sensitive, acrylic-based adhesive covered by a removable protective strip.

2.11 TAPES

A. ASJ Tape: White vapor-retarder tape matching factory-applied jacket with acrylic adhesive, complying with ASTM C1136.

1. Width: 3 inches.
2. Thickness: 11.5 mils.
3. Adhesion: 90 ounces force/inch in width.
4. Elongation: 2 percent.
5. Tensile Strength: 40 lbf/inch in width.
6. ASJ Tape Disks and Squares: Precut disks or squares of ASJ tape.

B. FSK Tape: Foil-face, vapor-retarder tape matching factory-applied jacket with acrylic adhesive; complying with ASTM C1136.

1. Width: 3 inches.
2. Thickness: 6.5 mils .
3. Adhesion: 90 ounces force/inch in width.
4. Elongation: 2 percent.
5. Tensile Strength: 40 lbf/inch in width.
6. FSK Tape Disks and Squares: Precut disks or squares of FSK tape.

C. PVC Tape: White vapor-retarder tape matching field-applied PVC jacket with acrylic adhesive; suitable for indoor and outdoor applications.

1. Width: 2 inches.
2. Thickness: 6 mils.
3. Adhesion: 64 ounces force/inch in width.
4. Elongation: 500 percent.
5. Tensile Strength: 18 lbf/inch in width.

D. Aluminum-Foil Tape: Vapor-retarder tape with acrylic adhesive.

1. Width: 2 inches.
2. Thickness: 3.7 mils.
3. Adhesion: 100 ounces force/inch in width.
4. Elongation: 5 percent.
5. Tensile Strength: 34 lbf/inch in width.

E. PVDC Tape for Indoor Applications: White vapor-retarder PVDC tape with acrylic adhesive.

1. Width: 3 inches
2. Film Thickness: 2 mils.
3. Adhesive Thickness: 1.5 mils.
4. Elongation at Break: 120 percent.
5. Tensile Strength: 20 psi in width.

F. PVDC Tape for Outdoor Applications: White vapor-retarder PVDC tape with acrylic adhesive.

1. Width: 3 inches.
2. Film Thickness: 6 mils.
3. Adhesive Thickness: 1.5 mils.
4. Elongation at Break: 145 percent.
5. Tensile Strength: 55 psi in width.

2.12 SECUREMENTS

A. Bands:

1. Stainless Steel: ASTM A240/A240M, Type 304 or Type 316; 0.015 inch thick, 3/4 inch wide with wing seal or closed seal.

2. Aluminum: ASTM B209, Alloy 3003, 3005, 3105, or 5005; Temper H-14, 0.020 inch thick, 3/4 inch wide with wing seal or closed seal.

3. Springs: Twin spring set constructed of stainless steel, with ends flat and slotted to accept metal bands. Spring size is determined by manufacturer for application.

B. Staples: Outward-clinching insulation staples, nominal 3/4 inch wide, stainless steel or Monel.

C. Wire: 0.080-inch nickel-copper alloy or 0.062-inch soft-annealed, stainless steel.

PART 3 - EXECUTION

3.01 EXAMINATION

A. Examine substrates and conditions for compliance with requirements for installation tolerances and other conditions affecting performance of insulation application.

1. Verify that systems to be insulated have been tested and are free of defects.

2. Verify that surfaces to be insulated are clean and dry.

B. Proceed with installation only after unsatisfactory conditions have been corrected.

3.02 PREPARATION

A. Clean and dry surfaces to receive insulation. Remove materials that will adversely affect insulation application.

B. Clean and prepare surfaces to be insulated. Before insulating, apply a corrosion coating to insulated surfaces as follows:

1. Stainless Steel: Coat 300 series stainless steel with an epoxy primer 5 mils thick and an epoxy finish 5 mils thick if operating in a temperature range between 140 and 300 deg F. Consult coating manufacturer for appropriate coating materials and application methods for operating temperature range.

2. Carbon Steel: Coat carbon steel operating at a service temperature of between 32 and 300 deg F with an epoxy coating. Consult coating manufacturer for appropriate coating materials and application methods for operating temperature range.

C. Coordinate insulation installation with the tradesman installing heat tracing. Comply with requirements for heat tracing that apply to insulation.

D. Mix insulating cements with clean potable water; if insulating cements are to be in contact with stainless steel surfaces, use demineralized water.

3.03 GENERAL INSTALLATION REQUIREMENTS

A. Install insulation materials, accessories, and finishes with smooth, straight, and even surfaces; free of voids throughout the length of piping, including fittings, valves, and specialties.

B. Install insulation materials, forms, vapor barriers or retarders, jackets, and of thicknesses required for each item of pipe system, as specified in insulation system schedules.

C. Install accessories compatible with insulation materials and suitable for the service. Install accessories that do not corrode, soften, or otherwise attack insulation or jacket in either wet or dry state.

D. Install insulation with longitudinal seams at top and bottom of horizontal runs.

E. Install multiple layers of insulation with longitudinal and end seams staggered.

F. Do not weld brackets, clips, or other attachment devices to piping, fittings, and specialties.

G. Keep insulation materials dry during storage, application, and finishing. Replace insulation materials that get wet.

H. Install insulation with tight longitudinal seams and end joints. Bond seams and joints with adhesive recommended by insulation material manufacturer.

I. Install insulation with least number of joints practical.

J. Where vapor barrier is indicated, seal joints, seams, and penetrations in insulation at hangers, supports, anchors, and other projections with vapor-barrier mastic.

1. Install insulation continuously through hangers and around anchor attachments.

2. For insulation application where vapor barriers are indicated, extend insulation on anchor legs from point of attachment to supported item to point of attachment to structure. Taper and seal ends attached to structure with vapor-barrier mastic.

3. Install insert materials and insulation to tightly join the insert. Seal insulation to insulation inserts with adhesive or sealing compound recommended by insulation material manufacturer.

4. Cover inserts with jacket material matching adjacent pipe insulation. Install shields over jacket, arranged to protect jacket from tear or puncture by hanger, support, and shield.

K. Apply adhesives, mastics, and sealants at manufacturer's recommended coverage rate and wet and dry film thicknesses.

L. Install insulation with factory-applied jackets as follows:

1. Draw jacket tight and smooth.

2. Cover circumferential joints with 3-inch-wide strips, of same material as insulation jacket. Secure strips with adhesive and outward-clinching staples along both edges of strip, spaced 4 inches o.c.

3. Overlap jacket longitudinal seams at least 1-1/2 inches. Install insulation with longitudinal seams at bottom of pipe. Clean and dry surface to receive self-sealing lap. Staple laps with outward-clinching staples along edge at 2 inches o.c.

   a. For below-ambient services, apply vapor-barrier mastic over staples.

4. Cover joints and seams with tape, in accordance with insulation material manufacturer's written instructions, to maintain vapor seal.

5. Where vapor barriers are indicated, apply vapor-barrier mastic on seams and joints and at ends adjacent to pipe flanges and fittings.

M. Cut insulation in a manner to avoid compressing insulation more than 25 percent of its nominal thickness.

N. Finish installation with systems at operating conditions. Repair joint separations and cracking due to thermal movement.

O. Repair damaged insulation facings by applying same facing material over damaged areas. Extend patches at least 4 inches beyond damaged areas. Adhere, staple, and seal patches in similar fashion to butt joints.

P. For above-ambient services, do not install insulation to the following:

1. Vibration-control devices.

2. Testing agency labels and stamps.

3. Nameplates and data plates.

3.04 PENETRATIONS

A. Insulation Installation at Roof Penetrations: Install insulation continuously through roof penetrations.

1. Seal penetrations with flashing sealant.

2. For applications requiring only indoor insulation, terminate insulation above roof surface and seal with joint sealant. For applications requiring indoor and outdoor insulation, install insulation for outdoor applications tightly joined to indoor insulation ends. Seal joint with joint sealant.

3. Extend jacket of outdoor insulation outside roof flashing at least 2 inches below top of roof flashing.

4. Seal jacket to roof flashing with flashing sealant.

B. Insulation Installation at Underground Exterior Wall Penetrations: Terminate insulation flush with sleeve seal. Seal terminations with flashing sealant.

C. Insulation Installation at Aboveground Exterior Wall Penetrations: Install insulation continuously through wall penetrations.

1. Seal penetrations with flashing sealant.

2. For applications requiring only indoor insulation, terminate insulation inside wall surface and seal with joint sealant. For applications requiring indoor and outdoor insulation, install insulation for outdoor applications tightly joined to indoor insulation ends. Seal joint with joint sealant.

3. Extend jacket of outdoor insulation outside wall flashing and overlap wall flashing at least 2 inches.

4. Seal jacket to wall flashing with flashing sealant.

D. Insulation Installation at Interior Wall and Partition Penetrations (That Are Not Fire Rated): Install insulation continuously through walls and partitions.

E. Insulation Installation at Fire-Rated Wall and Partition Penetrations: Install insulation continuously through penetrations of fire-rated walls and partitions.

1. Comply with requirements in Section 078413 "Penetration Firestopping" for firestopping and fire-resistive joint sealers.

F. Insulation Installation at Floor Penetrations:

1. Pipe: Install insulation continuously through floor penetrations.

2. Seal penetrations through fire-rated assemblies. Comply with requirements in Section 078413 "Penetration Firestopping."

3.05 GENERAL PIPE INSULATION INSTALLATION

A. Requirements in this article generally apply to all insulation materials, except where more specific requirements are specified in various pipe insulation material installation articles.

B. Insulation Installation on Fittings, Valves, Strainers, Flanges, Mechanical Couplings, and Unions:

1. Install insulation over fittings, valves, strainers, flanges, mechanical couplings, unions, and other specialties with continuous thermal and vapor-retarder integrity unless otherwise indicated.

2. Insulate pipe elbows using preformed fitting insulation or mitered fittings made from same material and density as that of adjacent pipe insulation. Each piece shall be butted tightly against adjoining piece and bonded with adhesive. Fill joints, seams, voids, and irregular surfaces with insulating cement finished to a smooth, hard, and uniform contour that is uniform with adjoining pipe insulation.

3. Insulate tee fittings with preformed fitting insulation sectional pipe insulation of same material and thickness as that used for adjacent pipe. Cut sectional pipe insulation to fit. Butt each section closely to the next and hold in place with tie wire. Bond pieces with adhesive.

4. Insulate valves using preformed fitting insulation or sectional pipe insulation of same material, density, and thickness as that used for adjacent pipe. Overlap adjoining pipe insulation by not less than 2 times the thickness of pipe insulation, or one pipe diameter, whichever is thicker. For valves, insulate up to and including the bonnets, valve stuffing-box studs, bolts, and nuts. Fill joints, seams, and irregular surfaces with insulating cement.

5. Insulate strainers using preformed fitting insulation or sectional pipe insulation of same material, density, and thickness as that used for adjacent pipe. Overlap adjoining pipe insulation by not less than 2 times the thickness of pipe insulation, or one pipe diameter, whichever is thicker. Fill joints, seams, and irregular surfaces with insulating cement. Insulate strainers, so strainer basket flange or plug can be easily removed and replaced without damaging the insulation and jacket. Provide a removable reusable insulation cover. For below-ambient services, provide a design that maintains vapor barrier.

6. Insulate flanges, mechanical couplings, and unions using a section of oversized preformed pipe insulation to fit. Overlap adjoining pipe insulation by not less than 2 times the thickness of pipe insulation, or one pipe diameter, whichever is thicker. Stencil or label the outside insulation jacket of each union with the word "union" matching size and color of pipe labels.

7. Cover segmented insulated surfaces with a layer of finishing cement and coat with a mastic. Install vapor-barrier mastic for below-ambient services and a breather mastic for above-ambient services. Reinforce the mastic with reinforcing mesh. Trowel the mastic to a smooth and well-shaped contour.

8. For services not specified to receive a field-applied jacket, except for flexible elastomeric and polyolefin, install fitted PVC cover over elbows, tees, strainers, valves, flanges, and unions. Terminate ends with PVC end caps. Tape PVC covers to adjoining insulation facing, using PVC tape.

C. Insulate instrument connections for thermometers, pressure gages, pressure temperature taps, test connections, flow meters, sensors, switches, and transmitters on insulated pipes. Shape insulation at these connections by tapering it to and around the connection with insulating cement and finish with finishing cement, mastic, and flashing sealant.

D. Install removable insulation covers[at locations indicated]. Installation shall conform to the following:

1. Make removable flange and union insulation from sectional pipe insulation of same thickness as that on adjoining pipe. Install same insulation jacket as that of adjoining pipe insulation.

2. When flange and union covers are made from sectional pipe insulation, extend insulation from flanges or union at least 2 times the insulation thickness over adjacent pipe

insulation on each side of flange or union. Secure flange cover in place with stainless steel or aluminum bands. Select band material compatible with insulation and jacket.

3. Construct removable valve insulation covers in same manner as for flanges, except divide the two-part section on the vertical center line of valve body.

4. When covers are made from block insulation, make two halves, each consisting of mitered blocks wired to stainless steel fabric. Secure this wire frame, with its attached insulation, to flanges with tie wire. Extend insulation at least 2 inches over adjacent pipe insulation on each side of valve. Fill space between flange or union cover and pipe insulation with insulating cement. Finish cover assembly with insulating cement applied in two coats. After first coat is dry, apply and trowel second coat to a smooth finish.

5. Unless a PVC jacket is indicated in field-applied jacket schedules, finish exposed surfaces with a metal jacket.

3.06 INSTALLATION OF CALCIUM SILICATE INSULATION

A. Insulation Installation on Straight Pipes and Tubes:

1. Secure single-layer insulation with stainless steel bands at 12-inch intervals, and tighten bands without deforming insulation materials.

2. Install two-layer insulation with joints tightly butted and staggered at least 3 inches. Secure inner layer with wire spaced at 12-inch intervals. Secure outer layer with stainless steel bands at 12-inch intervals.

3. Apply a skim coat of mineral-fiber, hydraulic-setting cement to insulation surface. When cement is dry, apply flood coat of lagging adhesive and press on one layer of glass cloth or tape. Overlap edges at least 1 inch. Apply finish coat of lagging adhesive over glass cloth or tape. Thin finish coat to achieve smooth, uniform finish.

B. Insulation Installation on Pipe Flanges:

1. Install preformed pipe insulation to outer diameter of pipe flange.

2. Make width of insulation section same as overall width of flange and bolts, plus twice the thickness of pipe insulation.

3. Fill voids between inner circumference of flange insulation and outer circumference of adjacent straight pipe segments with cut sections of block insulation of same material and thickness as that of pipe insulation.

4. Finish flange insulation same as pipe insulation.

C. Insulation Installation on Pipe Fittings and Elbows:

1. Install preformed sections of same material as that of straight segments of pipe insulation when available. Secure according to manufacturer's written instructions.

2. When preformed insulation sections of insulation are not available, install mitered sections of calcium silicate insulation. Secure insulation materials with wire or bands.

3. Finish fittings insulation same as pipe insulation.

D. Insulation Installation on Valves and Pipe Specialties:

1. Install mitered segments of calcium silicate insulation to valve body. Arrange insulation to permit access to packing and to allow valve operation without disturbing insulation.

2. Install insulation to flanges as specified for flange insulation application.

3. Finish valve and specialty insulation same as pipe insulation.

3.07 INSTALLATION OF CELLULAR-GLASS INSULATION

A. Insulation Installation on Straight Pipes and Tubes:

1. Secure each layer of insulation to pipe with wire or bands, and tighten bands without deforming insulation materials.

2. Where vapor barriers are indicated, seal longitudinal seams, end joints, and protrusions with vapor-barrier mastic and joint sealant.

3. For insulation with factory-applied jackets on above-ambient services, secure laps with outward-clinched staples at 6 inches o.c.

4. For insulation with factory-applied jackets on below-ambient services, do not staple longitudinal tabs. Instead, secure tabs with additional adhesive, as recommended by insulation material manufacturer, and seal with vapor-barrier mastic and flashing sealant.

B. Insulation Installation on Pipe Flanges:

1. Install preformed pipe insulation to outer diameter of pipe flange.

2. Make width of insulation section same as overall width of flange and bolts, plus twice the thickness of pipe insulation.

3. Fill voids between inner circumference of flange insulation and outer circumference of adjacent straight pipe segments with cut sections of cellular-glass block insulation of same thickness as that of pipe insulation.

4. Install jacket material with manufacturer's recommended adhesive, overlap seams at least 1 inch, and seal joints with flashing sealant.

C. Insulation Installation on Pipe Fittings and Elbows:

1. Install preformed sections of same material as that of straight segments of pipe insulation when available. Secure according to manufacturer's written instructions.

2. When preformed sections of insulation are not available, install mitered sections of cellular-glass insulation. Secure insulation materials with wire or bands.

D. Insulation Installation on Valves and Pipe Specialties:

1. Install preformed sections of cellular-glass insulation to valve body.

2. Arrange insulation to permit access to packing and to allow valve operation without disturbing insulation.

3. Install insulation to flanges as specified for flange insulation application.

3.08 INSTALLATION OF FLEXIBLE ELASTOMERIC INSULATION

A. Seal longitudinal seams and end joints with manufacturer's recommended adhesive to eliminate openings in insulation that allow passage of air to surface being insulated.

B. Insulation Installation on Pipe Flanges:

1. Install pipe insulation to outer diameter of pipe flange.

2. Make width of insulation section same as overall width of flange and bolts, plus twice the thickness of pipe insulation.

3. Fill voids between inner circumference of flange insulation and outer circumference of adjacent straight pipe segments with cut sections of sheet insulation of same thickness as that of pipe insulation.

4. Secure insulation to flanges and seal seams with manufacturer's recommended adhesive to eliminate openings in insulation that allow passage of air to surface being insulated.

C. Insulation Installation on Pipe Fittings and Elbows:

1. Install mitered sections of pipe insulation.

2. Secure insulation materials and seal seams with manufacturer's recommended adhesive to eliminate openings in insulation that allow passage of air to surface being insulated.

D. Insulation Installation on Valves and Pipe Specialties:

1. Install preformed valve covers manufactured of same material as that of pipe insulation when available.

2. When preformed valve covers are not available, install cut sections of pipe and sheet insulation to valve body. Arrange insulation to permit access to packing and to allow valve operation without disturbing insulation.

3. Install insulation to flanges as specified for flange insulation application.

4. Secure insulation to valves and specialties, and seal seams with manufacturer's recommended adhesive to eliminate openings in insulation that allow passage of air to surface being insulated.

3.09 INSTALLATION OF MINERAL-FIBER INSULATION

A. Insulation Installation on Straight Pipes and Tubes:

1. Secure each layer of preformed pipe insulation to pipe with wire or bands, and tighten bands without deforming insulation materials.

2. Where vapor barriers are indicated, seal longitudinal seams, end joints, and protrusions with vapor-barrier mastic and joint sealant.

3. For insulation with factory-applied jackets on above-ambient surfaces, secure laps with outward-clinched staples at 6 inches o.c.

4. For insulation with factory-applied jackets on below-ambient surfaces, do not staple longitudinal tabs. Instead, secure tabs with additional adhesive, as recommended by insulation material manufacturer, and seal with vapor-barrier mastic and flashing sealant.

B. Insulation Installation on Pipe Flanges:

1. Install preformed pipe insulation to outer diameter of pipe flange.

2. Make width of insulation section same as overall width of flange and bolts, plus twice the thickness of pipe insulation.

3. Fill voids between inner circumference of flange insulation and outer circumference of adjacent straight pipe segments with mineral-fiber blanket insulation.

4. Install jacket material with manufacturer's recommended adhesive, overlap seams at least 1 inch, and seal joints with flashing sealant.

C. Insulation Installation on Pipe Fittings and Elbows:

1. Install preformed sections of same material as that of straight segments of pipe insulation when available.

2. When preformed insulation elbows and fittings are not available, install mitered sections of pipe insulation, to a thickness equal to adjoining pipe insulation. Secure insulation materials with wire or bands.

D. Insulation Installation on Valves and Pipe Specialties:

1. Install preformed sections of same material as that of straight segments of pipe insulation when available.

2. When preformed sections are not available, install mitered sections of pipe insulation to valve body.

3. Arrange insulation to permit access to packing and to allow valve operation without disturbing insulation.

4. Install insulation to flanges as specified for flange insulation application.

3.10 INSTALLATION OF PHENOLIC INSULATION

A. General Installation Requirements:

1. Secure single-layer insulation with stainless steel bands at 12-inch intervals, and tighten bands without deforming insulation materials.

2. Install two-layer insulation with joints tightly butted and staggered at least 3 inches. Secure inner layer with 0.062-inch wire spaced at 12-inch intervals. Secure outer layer with stainless steel bands at 12-inch intervals.

B. Insulation Installation on Straight Pipes and Tubes:

1. Secure each layer of insulation to pipe with wire or bands, and tighten bands without deforming insulation materials.

2. Where vapor barriers are indicated, seal longitudinal seams, end joints, and protrusions with vapor-barrier mastic and joint sealant.

3. For insulation with factory-applied jackets on above-ambient services, secure laps with outward-clinched staples at 6 inches o.c.

4. For insulation with factory-applied jackets with vapor retarders on below-ambient services, do not staple longitudinal tabs. Instead, secure tabs with additional adhesive, as recommended by insulation material manufacturer, and seal with vapor-barrier mastic and flashing sealant.

C. Insulation Installation on Pipe Flanges:

1. Install preformed pipe insulation to outer diameter of pipe flange.

2. Make width of insulation section same as overall width of flange and bolts, plus twice the thickness of pipe insulation.

3. Fill voids between inner circumference of flange insulation and outer circumference of adjacent straight pipe segments with cut sections of block insulation of same material and thickness as that of pipe insulation.

D. Insulation Installation on Pipe Fittings and Elbows:

1. Install preformed insulation sections of same material as that of straight segments of pipe insulation. Secure according to manufacturer's written instructions.

E. Insulation Installation on Valves and Pipe Specialties:

1. Install preformed insulation sections of same material as that of straight segments of pipe insulation. Secure according to manufacturer's written instructions.

2. Arrange insulation to permit access to packing and to allow valve operation without disturbing insulation.

3. Install insulation to flanges as specified for flange insulation application.

3.11 INSTALLATION OF POLYISOCYANURATE INSULATION

A. Insulation Installation on Straight Pipes and Tubes:

1. Secure each layer of insulation to pipe with tape or bands and tighten without deforming insulation materials. Orient longitudinal joints between half sections in 3- and 9-o'clock positions on the pipe.

2. For insulation with factory-applied jackets with vapor barriers, do not staple longitudinal tabs. Instead, secure tabs with additional adhesive or tape, as recommended by insulation material manufacturer, and seal with vapor-barrier mastic.

3. All insulation shall be tightly butted and free of voids and gaps at all joints. Vapor barrier must be continuous. Before installing jacket material, install vapor-barrier system.

B. Insulation Installation on Pipe Flanges:

1. Install preformed pipe insulation to outer diameter of pipe flange.

2. Make width of insulation section same as overall width of flange and bolts, and same thickness as that of adjacent pipe insulation, not to exceed 1-1/2-inch thickness.

3. Fill voids between inner circumference of flange insulation and outer circumference of adjacent straight pipe segments with cut sections of polyisocyanurate block insulation of same thickness as that of pipe insulation.

C. Insulation Installation on Fittings and Elbows:

1. Install preformed sections of same material as that of straight segments of pipe insulation. Secure according to manufacturer's written instructions.

D. Insulation Installation on Valves and Pipe Specialties:

1. Install preformed sections of polyisocyanurate insulation to valve body.

2. Arrange insulation to permit access to packing and to allow valve operation without disturbing insulation.

3. Install insulation to flanges as specified for flange insulation application.

3.12 INSTALLATION OF POLYOLEFIN INSULATION

A. Insulation Installation on Straight Pipes and Tubes:

1. Seal split-tube longitudinal seams and end joints with manufacturer's recommended adhesive to eliminate openings in insulation that allow passage of air to surface being insulated.

B. Insulation Installation on Pipe Flanges:

1. Install pipe insulation to outer diameter of pipe flange.

2. Make width of insulation section same as overall width of flange and bolts, plus twice the thickness of pipe insulation.

3. Fill voids between inner circumference of flange insulation and outer circumference of adjacent straight pipe segments with cut sections of polyolefin sheet insulation of same thickness as that of pipe insulation.

4. Secure insulation to flanges and seal seams with manufacturer's recommended adhesive to eliminate openings in insulation that allow passage of air to surface being insulated.

C. Insulation Installation on Pipe Fittings and Elbows:

1. Install mitered sections of polyolefin pipe insulation.

2. Secure insulation materials and seal seams with manufacturer's recommended adhesive to eliminate openings in insulation that allow passage of air to surface being insulated.

D. Insulation Installation on Valves and Pipe Specialties:

1. Install cut sections of polyolefin pipe and sheet insulation to valve body.

2. Arrange insulation to permit access to packing and to allow valve operation without disturbing insulation.

3. Install insulation to flanges as specified for flange insulation application.

4. Secure insulation to valves and specialties, and seal seams with manufacturer's recommended adhesive to eliminate openings in insulation that allow passage of air to surface being insulated.

3.13 INSTALLATION OF POLYSTYRENE INSULATION

A. Insulation Installation on Straight Pipes and Tubes:

1. Secure each layer of insulation with tape or bands and tighten bands without deforming insulation materials. Orient longitudinal joints between half sections in 3- and 9-o'clock positions on the pipe.

2. For insulation with factory-applied jackets with vapor barriers, do not staple longitudinal tabs. Instead, secure tabs with additional adhesive or tape, as recommended by insulation material manufacturer, and seal with vapor-barrier mastic.

3. All insulation shall be tightly butted and free of voids and gaps at all joints. Vapor barrier must be continuous. Before installing jacket material, install vapor-barrier system.

B. Insulation Installation on Pipe Flanges:

1. Install preformed pipe insulation to outer diameter of pipe flange.

2. Make width of insulation section same as overall width of flange and bolts, and make thickness same as that of adjacent pipe insulation, not to exceed 1-1/2 inches.

3. Fill voids between inner circumference of flange insulation and outer circumference of adjacent straight pipe segments with cut sections of polystyrene block insulation of same thickness that of as pipe insulation.

C. Insulation Installation on Pipe Fittings and Elbows:

1. Install preformed insulation sections of same material as that of straight segments of pipe insulation. Secure according to manufacturer's written instructions.

D. Insulation Installation on Valves and Pipe Specialties:

1. Install preformed section of polystyrene insulation to valve body.

2. Arrange insulation to permit access to packing and to allow valve operation without disturbing insulation.

3. Install insulation to flanges as specified for flange insulation application.

3.14 INSTALLATION OF FIELD-APPLIED JACKETS

A. Where glass-cloth jackets are indicated, install directly over bare insulation or insulation with factory-applied jackets.

1. Draw jacket smooth and tight to surface with 2-inch overlap at seams and joints.

2. Embed glass cloth between two 0.062-inch-thick coats of lagging adhesive.

3. Completely encapsulate insulation with coating, leaving no exposed insulation.

B. Where FSK jackets are indicated, install as follows:

1. Draw jacket material smooth and tight.

2. Install lap or joint strips with same material as jacket.

3. Secure jacket to insulation with manufacturer's recommended adhesive.

4. Install jacket with 1-1/2-inch laps at longitudinal seams and 3-inch-wide joint strips at end joints.

5. Seal openings, punctures, and breaks in vapor-retarder jackets and exposed insulation with vapor-barrier mastic.

C. Where PVC jackets are indicated and for horizontal applications, install with 1-inch overlap at longitudinal seams and end joints. Seal with manufacturer's recommended adhesive.

1. Apply two continuous beads of adhesive to seams and joints, one bead under lap and the finish bead along seam and joint edge.

D. Where metal jackets are indicated, install with 2-inch overlap at longitudinal seams and end joints. Overlap longitudinal seams arranged to shed water. Seal end joints with weatherproof sealant recommended by insulation manufacturer. Secure jacket with stainless steel bands 12 inches o.c. and at end joints.

E. Where PVDC jackets are indicated, install as follows:

1. Apply three separate wraps of filament tape per insulation section to secure pipe insulation to pipe prior to installation of PVDC jacket.

2. Wrap factory-presized jackets around individual pipe insulation sections, with one end overlapping the previously installed sheet. Install presized jacket with an approximate overlap at butt joint of 2 inches over the previous section. Adhere lap seal using adhesive or SSL, and then apply 1-1/4 circumferences of appropriate PVDC tape around overlapped butt joint.

3. Continuous jacket can be spiral-wrapped around a length of pipe insulation. Apply adhesive or PVDC tape at overlapped spiral edge. When electing to use adhesives, refer to manufacturer's written instructions for application of adhesives along this spiral edge to maintain a permanent bond.

4. Jacket can be wrapped in cigarette fashion along length of roll for insulation systems with an outer circumference of 33-1/2 inches or less. The 33-1/2-inch-circumference limit allows for 2-inch-overlap seal. Using the length of roll allows for longer sections of jacket to be installed at one time. Use adhesive on the lap seal. Visually inspect lap seal for "fishmouthing," and use PVDC tape along lap seal to secure joint.

5. Repair holes or tears in PVDC jacket by placing PVDC tape over the hole or tear and wrapping a minimum of 1-1/4 circumferences to avoid damage to tape edges.

3.15 FINISHES

A. Insulation with ASJ, Glass-Cloth, or Other Paintable Jacket Material: Paint jacket with paint system identified below and as specified in Section 099113 "Exterior Painting" and Section 099123 "Interior Painting."

1. Flat Acrylic Finish: Two finish coats over a primer that is compatible with jacket material and finish coat paint. Add fungicidal agent to render fabric mildew proof.

a. Finish Coat Material: Interior, flat, latex-emulsion size.

B. Flexible Elastomeric Thermal Insulation: After adhesive has fully cured, apply two coats of insulation manufacturer's recommended protective coating.

C. Color: Final color as selected by Architect. Vary first and second coats to allow visual inspection of the completed Work.

D. Do not field paint aluminum or stainless steel jackets.

3.16 FIELD QUALITY CONTROL

A. Owner will engage a qualified testing agency to perform tests and inspections.

B. Engage a qualified testing agency to perform tests and inspections.

C. Manufacturer's Field Service: Engage a factory-authorized service representative to test and inspect components, assemblies, and equipment installations, including connections.

D. Perform tests and inspections[with the assistance of a factory-authorized service representative].

E. Tests and Inspections: Inspect pipe, fittings, strainers, and valves, randomly selected by Architect, by removing field-applied jacket and insulation in layers in reverse order of their installation. Extent of inspection shall be limited to three locations of straight pipe, three locations of threaded fittings, three locations of welded fittings, two locations of threaded strainers, two locations of welded strainers, three locations of threaded valves, and three locations of flanged valves for each pipe service defined in the "Piping Insulation Schedule, General" Article.

F. All insulation applications will be considered defective if they do not pass tests and inspections.

G. Prepare test and inspection reports.

3.17 PIPING INSULATION SCHEDULE, GENERAL

A. Insulation conductivity and thickness per pipe size shall comply with schedules in this Section or with requirements of authorities having jurisdiction, whichever is more stringent.

B. Acceptable preformed pipe and tubular insulation materials and thicknesses are identified for each piping system and pipe size range. If more than one material is listed for a piping system, selection from materials listed is Contractor's option.

C. Items Not Insulated: Unless otherwise indicated, do not install insulation on the following:

1. Underground piping.

2. Chrome-plated pipes and fittings unless there is a potential for personnel injury.

3.18 INDOOR PIPING INSULATION SCHEDULE

A. Condensate and Equipment Drain Water below 60 Deg F:

1. All Pipe Sizes: Insulation shall be[one of] the following:
    a. Cellular Glass: 1-1/2 inches thick.
    b. Flexible Elastomeric: 1 inch thick.
    c. Mineral-Fiber, Preformed Pipe Insulation, Type I: 1 inch thick.
    d. Phenolic: 1 inch thick.
    e. Polyisocyanurate: 1 inch thick.
    f. Polyolefin: 1 inch thick.

B. Chilled Water and Brine, 40 Deg F and below:

1. NPS 3 and Smaller: Insulation shall be one of the following:
    a. Cellular Glass: 2 inches thick.
    b. Mineral-Fiber, Preformed Pipe Insulation, Type I: 1-1/2 inches thick.
    c. Phenolic: 2 inches thick.
    d. Polyisocyanurate: 1 inch thick.
2. NPS 4 to NPS 12: Insulation shall be one of the following:
    a. Cellular Glass: 2 inches thick.
    b. Mineral-Fiber, Preformed Pipe Insulation, Type I: 2 inches thick.
    c. Phenolic: 2 inches thick.
    d. Polyisocyanurate: 1 inch thick.
3. NPS 14 and Larger: Insulation shall be one of the following:
    a. Cellular Glass: 2 inches thick.
    b. Phenolic: [1-1/2 inches] [2 inches] [3 inches] <Insert dimension> thick.

C. Chilled Water and Brine, Above 40 Deg F:

1. NPS 12 and Smaller: Insulation shall be one of the following:
    a. Cellular Glass: 2 inches thick.
    b. Flexible Elastomeric: 1 inch thick.
    c. Phenolic: [1 inch] [1-1/2 inches] [2 inches] [3 inches] <Insert dimension> thick.

d. Polyisocyanurate: 1 inch thick.

e. Polyolefin: 1 inch thick.

2. NPS 14 and Larger: Insulation shall be one of the following:

a. Cellular Glass: 2 inches thick.

b. Phenolic: 2 inches thick.

D. Condenser-Water Supply and Return:

1. NPS 12and Smaller: Insulation shall be one of the following:

a. Cellular Glass: 2 inches thick.

b. Flexible Elastomeric: 1 inch thick.

c. Phenolic: [1 inch] [1-1/2 inches] thick.

2. NPS 14 and Larger: Insulation shall be one of the following:

a. Cellular Glass: 2 inches thick.

b. Phenolic: 2 inches thick.

E. Refrigerant Suction and Hot-Gas Piping:

1. All Pipe Sizes: Insulation shall be one of the following:

a. Cellular Glass: 1-1/2 inches thick.

b. Flexible Elastomeric: 1 inch thick.

c. Mineral-Fiber, Preformed Pipe Insulation, Type I: 1 inch thick.

d. Phenolic: 1 inch thick.

e. Polyisocyanurate: 1 inch thick.

f. Polyolefin: 1 inch thick.

F. Refrigerant Suction and Hot-Gas Flexible Tubing:

1. All Pipe Sizes: Insulation shall be one of the following:

a. Flexible Elastomeric: 2 inches thick.

b. Polyolefin: 2 inches thick.

G. Refrigerant Liquid Piping:

1. All Pipe Sizes: Insulation shall be[one of] the following:
    a. Cellular Glass: 1-1/2 inches thick.
    b. Flexible Elastomeric: 1 inch thick.
    c. Mineral-Fiber, Preformed Pipe Insulation, Type I: 1 inch thick.
    d. Phenolic: 1 inch thick.
    e. Polyisocyanurate: 1 inch thick.
    f. Polyolefin: 1 inch thick.

3.19 OUTDOOR, ABOVEGROUND PIPING INSULATION SCHEDULE

A. Chilled Water and Brine:
1. All Pipe Sizes: Insulation shall be one of the following:
    a. Cellular Glass: 3 inches thick.
    b. Flexible Elastomeric: 3 inches thick.
    c. Mineral-Fiber, Preformed Pipe Insulation, Type I: 3 inches thick.
    d. Phenolic: 2 inches thick.
    e. Polyisocyanurate: 2 inches thick.
    f. Polyolefin: 3 inches thick.
    g. Polystyrene: 2 inches thick.

B. Condenser-Water Supply and Return:
1. All Pipe Sizes: Insulation shall be one of the following:
    a. Cellular Glass: 2 inches thick.
    b. Flexible Elastomeric: 2 inches thick.
    c. Mineral-Fiber, Preformed Pipe Insulation, Type I: 2 inches thick.
    d. Phenolic: 2 inches thick.
    e. Polyisocyanurate: 2 inches thick.
    f. Polyolefin: 2 inches thick.
    g. Polystyrene: 2 inches thick.

C. Refrigerant Suction and Hot-Gas Piping:

1. All Pipe Sizes: Insulation shall be one of the following:

a. Cellular Glass: 2 inches thick.

b. Flexible Elastomeric: 2 inches thick.

c. Mineral-Fiber, Preformed Pipe Insulation, Type I: 2 inches thick.

d. Phenolic: 2 inches thick.

e. Polyisocyanurate: 2 inches thick.

f. Polyolefin: 2 inches thick.

g. Polystyrene: 2 inches thick.

D. Refrigerant Suction and Hot-Gas Flexible Tubing:

1. All Pipe Sizes: Insulation shall be one of the following:

a. Flexible Elastomeric: 2 inches thick.

b. Polyolefin: 2 inches thick.

E. Refrigerant Liquid Piping:

1. All Pipe Sizes: Insulation shall be one of the following:

a. Flexible Elastomeric: 2 inches thick.

b. Polyolefin: 2 inches thick.

F. Heat-Recovery Piping:

1. All Pipe Sizes: Insulation shall be one of the following:

a. Cellular Glass: 2 inches thick.

b. Flexible Elastomeric: 2 inches thick.

c. Mineral-Fiber, Preformed Pipe Insulation, Type I: 2 inches thick.

d. Phenolic: 2 inches thick.

e. Polyisocyanurate: 2 inches thick.

f. Polyolefin: 2 inches thick.

g. Polystyrene: 2 inches thick.

3.20 OUTDOOR, UNDERGROUND, PIPING INSULATION SCHEDULE

A. Insulation for belowground piping is specified in Section 232113.13 "Underground Hydronic Piping" and Section 232213.13 "Underground Steam and Condensate Heating Piping."

B. Chilled Water, All Sizes: Cellular glass, 2 inches thick.

C. Condenser-Water Supply and Return, All Sizes: Cellular glass, 2 inches thick.

D. Heating-Hot-Water Supply and Return, All Sizes, 200 Deg F and Below: Cellular glass, 3 inches thick.

E. Heating-Hot-Water Supply and Return, All Sizes, Above 200 Deg F:

1. Calcium Silicate: 3 inches thick.

2. Cellular Glass: 3 inches thick.

F. Steam and Steam Condensate, All Sizes, 350 Deg F and Below:

1. Calcium Silicate: 4 inches thick.

2. Cellular Glass: 4 inches thick.

G. Steam and Steam Condensate, All Sizes, Above 350 Deg F:

1. Calcium Silicate: 5 inches thick.

2. Cellular Glass: 5 inches thick.

H. Dual-Service Heating and Cooling, All Sizes, 40 to 200 Deg F: Cellular glass, 3 inches thick.

I. Fuel Oil Piping, All Sizes, Heated: Cellular glass, 2 inches thick.

3.21 INDOOR, FIELD-APPLIED JACKET SCHEDULE

A. Install jacket over insulation material. For insulation with factory-applied jacket, install the field-applied jacket over the factory-applied jacket.

B. If more than one material is listed, selection from materials listed is Contractor's option.

C. Piping, Concealed:

1. PVC, Color-Coded by System: 30 mils thick.

2. Aluminum, Smooth, Corrugated, Stucco Embossed: 0.024 inch thick.

3. Stainless Steel, Type 304 or Type 316, Smooth No. 2B Finish, Corrugated, Stucco Embossed: 0.016 inch thick.

D. Piping, Exposed:

1. PVC, Color-Coded by System: 30 mils thick.

2. Aluminum, Smooth, Corrugated, Stucco Embossed: 0.024 inch thick.

3. Stainless Steel, Type 304 or Type 316, Smooth No. 2B Finish, Corrugated, Stucco Embossed: 0.016 inch thick.

3.22 OUTDOOR, FIELD-APPLIED JACKET SCHEDULE

A. Install jacket over insulation material. For insulation with factory-applied jacket, install the field-applied jacket over the factory-applied jacket.

B. If more than one material is listed, selection from materials listed is Contractor's option.

C. Piping, Concealed:

1. PVC, Color-Coded by System: 30 mils thick.

2. Aluminum, Smooth, Corrugated, Stucco Embossed: 0.024 inch thick.

3. Stainless Steel, Type 304 or Type 316, Smooth No. 2B Finish, Corrugated, Stucco Embossed: 0.016 inch thick.

D. Piping, Exposed:

1. PVC: 30 mils thick.

2. Aluminum, Smooth, Corrugated, Stucco Embossed: 0.024 inch thick.

3. Stainless Steel, Type 304 or Type 316, Smooth No. 2B Finish, Corrugated, Stucco Embossed: 0.016 inch thick.

3.23 UNDERGROUND, FIELD-APPLIED INSULATION JACKET

A. For underground direct-buried piping applications, install underground direct-buried jacket over insulation material.

END OF SECTION

23 09 23

ENERGY MANAGEMENT AND CONTROL SYSTEM (EMCS)

PART 1 - GENERAL

1.01 GENERAL

A. The Energy Management and Control System (EMCS) shall be comprised of a Local Area Network (LAN) infrastructure, Operator Workstations (OWS), Engineering Workstations (EWS), a Primary Network Server (PNS), Network Area Controllers (NAC), Application Specific Controllers (ASC), Unitary System Controllers (USC), and Field Devices installed within the facility.

B. The Workstations, Primary Network Server, and Network Area Controllers shall be connected by an EMCS Contractor supplied and installed Local Area Network. The LAN shall comply with all IEEE Standards as outlined in: IEEE STD 802-2014: IEEE Standard for Local and Metropolitan Networks, Overview and Architecture.

C. If the EMCS Contractor wishes connect to the Owner's Wide Area/Local Area Network as part of the control system network, the EMCS Contractor shall acquire permission in writing and include the letter in the submittal. Any system that requires connection to the Owner's network for communication between NAC, ASC, USC and/or field devices that is submitted without the written permission from the Owner shall be rejected. The EMCS Contractor shall coordinate with the Owner and supply all required information.

D. Access to the system, either locally in the building, or remotely from a central site or sites, shall be accomplished through standard web browsers, via the Internet and/or a local area network. System shall be compatible across various devices including iPhone, Android and Windows phones and various tablets running these operating systems.

E. All EMCS controllers and workstations shall communicate using the protocols and network standards as defined by ANSI/ASHRAE Standard 135-2016, latest revision. Management level TCP/IP Ethernet network speeds shall be 1 Gbps minimum and the Automation Level MS/TP network speeds shall be 76.8 Kbps minimum.

F. The Server shall gather data from the system and generate HTML5 pages accessible through a conventional web browser from all personal computers (PCs), tablets and mobile phones connected to the network. System shall include any and all software and hardware to support unlimited users. The EMCS shall be compatible with all common web browsers.

G. Facility Operators shall be able to view and configure systems through the standard web browser and all graphical/data representations shall appear identical, whether the user is on site or viewing via the Internet at a remote location. Standard operator functions such as control point manipulation, configuration and viewing of trends, schedules and alarms shall be performed through the standard browser. Each mechanical system and building floor plan shall be depicted on the operator workstation by point-and-click graphics.

H. The EMCS shall directly control HVAC equipment as specified in the Sequence of Operations. Furnish Energy Conservation features such as Optimal Start/Stop, Night Setback, Setpoint Reset logic, and Demand Control Ventilation.

I. The EMCS vendor shall provide the following additional services as part of this Specification: warranty and service during the warranty period; submittals, samples and record documentation; comprehensive startup and testing of the EMCS with documentation; training services for the Owner and facility operators; coordination with other contractors and suppliers; operator and technician training program, and shall cooperate fully with the Project Commissioning Agent (CxA).

J. Products furnished under this Specification but installed by others.

1. Mechanical devices installed under Division 23 by the Mechanical Contractor or other suppliers: temperature sensing thermowells; automatic control dampers not installed in air handling unit mixing boxes or louver schedules; damper actuators for variable air volume (VAV) terminal units; mounting cost of controller and actuator for VAV terminal units.

2. Electrical devices installed under Division 26 by the electrical Contractor:

a. 120 VAC power to controllers and control panels at locations indicated on the Drawings. Review and verify that these locations are adequate for the proposed EMCS.

b. Interlock wiring to duct mounted smoke detector or fire alarm shutdown relays to HVAC equipment motor starters, variable frequency drives (VFD) and etc.

K. Provide and install all interconnecting cables between all operator’s terminals and peripheral devices (such as printers, etc.) supplied under this section.

L. DDC system to be tied in to emergency button/switch to initiate shut down of all HVAC equipment when activated.

M. System shall be fully compatible and interface with existing County system. Owner shall be able to use Maintenance Direct for Actions on individual Areas as needed and requested by Owner. Contractor responsible for all hardware, software and coordination involved.

N. It is Contractor responsibility to discover and integrate all devices and points into system as necessary. This includes, but not limited to, HVAC, electrical, plumbing and lighting devices.

O. It is the intent of this Specification to describe the basic architecture and performance requirements of the Energy Management and Control System (EMCS). The turn-key EMCS shall include all work station software including operator software, cables, programming tools, graphics editor, all other available software programs, modules, handhelds, or plug- ins offered by the DDC manufacturers, hardware, Control Units, Distributed Controllers, Unitary Controllers, Local Area Networks (LANs), sensors, modems, wiring, connectors, control devices, actuators, installation and calibration, supervision, adjustments and fine tuning necessary for a complete and fully operational system.

P. Systems shall be furnished and installed complete in all respects, including any and all equipment, controls, wiring, instrumentation, enclosures, labor, engineering, training, commissioning, programming, supervision, calibration, coordination with other trades, etc. No information given in (or omitted from) these Specifications shall relieve the Contractor of this absolute requirement. Include all associated electrical work except as noted. Work includes furnishing of all labor, superintendence, materials, tools, equipment and sources necessary for the complete installation or modification of the following systems as herein specified. It is the intent of these Specifications that the Contractor shall furnish and install the systems complete in every respect and ready to operate. All equipment, miscellaneous items and accessories required for such installation and for the correct and convenient operation of the entire installation whether or not each such item or accessory is shown on the plans or mentioned in these Specifications shall be furnished and installed.

Q. All systems shall be complete true stand-alone systems. Program database, data acquisition, and all control sequence logic shall reside in each DDC Device.

R. The Building Level Communication Network (BLCN) shall not be dependent upon connection to a Server or Master Controller for the performance of the Sequence of Control as outlined in this Specification. Each Device shall, to the greatest possible extent, perform its programmed sequence without reliance on the BLCN.

1. All devices installed shall be native BACnet. **LonWorks or proprietary protocols are NOT ALLOWED.** Devices that are not BACnet tested, compliant, certified, clearly stamped and listed by the BACnet Testing Laboratories (BTL) shall not be acceptable under this Specification and are strictly prohibited.

2. System shall be provided with a complete Web-enabled operator interface. The application shall operate on industry standard PC hardware. Proprietary server hardware or “Black Boxes” will not be acceptable. Third party Web-enabled applications are acceptable if they are configured to be indistinguishable from the OWS applications.

3. No Gateways, Communication Bridges, Protocol Translators or any other device that translates any proprietary or other communication protocol to the BACnet communication the protocol shall be permitted as a part of the EMCS installation under this Specification section. Gateways may only be used as required for communication to existing systems or systems installed under other Specification sections.

4. All EMCS DDC Devices shall be capable of updating firmware using software via the internet without replacing any hardware, microprocessors or chips.

5. Installed system must have full access to logic and functional blocks. User shall have full ability to modify programming.

6. Outside air temperature shall be supplied by the National Weather Service with a local backup at every site.

7. Point naming/labeling shall be consistent throughout buildings.

8. Where Drawings are provided as part of or supplement to these Specifications, such Drawings are inherently schematic only and not intended to convey all controls, wiring, installation, details, etc. It shall be the responsibility of the EMCS Contractor to verify

that control approaches presented are appropriate for the HVAC systems involved, and that bids include all work described, specified, or otherwise necessary for a complete and functioning system.

9. System shall have the ability to program schedules locally if needed during network outages.

1.02 RELATED DOCUMENTS & REFERENCES

A. Drawings and general provisions of the contract documents, apply to this section including:

1. Division 01 for General Conditions and Supplementary Conditions.
2. Division 21 for fire protection equipment.
3. Division 22 for plumbing equipment and domestic water systems.
4. Division 23 for mechanical equipment, ductwork, and piping systems.
5. Division 26 for electrical equipment, lighting control, and fire alarm systems.
6. Section 013300 Submittals.
7. Section 01524 Construction Waste Management
8. Section 01352 LEED Requirements
9. Section 01611 Environmental Management
10. Section 01570 Pollution Prevention and Control

B. The latest edition of the following standards and codes in effect as approved by the authority having jurisdiction and amended as of supplier's proposal date, and any applicable subsections thereof, shall govern design and selection of equipment and material supplied:

1. ANSI MC85.1 - Terminology for Automatic Control.
2. American Society of Heating, Refrigerating and Air Conditioning Engineers (ASHRAE).
3. ANSI/ASHRAE Standard 135-2016, BACnet.
4. BTL Mark by the BACnet Testing Laboratories.
5. International Building Code (IBC), 2015 edition including local amendments.
6. International Energy Conservation Code (IECC), 2015 edition including local amendments.
7. UL 916 Underwriters Laboratories Standard for Energy Management Equipment. Canada and the US.

8. National Electrical Code (NEC), 2017 edition.

9. FCC Part 15, Subpart J, Class A.

10. National Institute of Standards and Technology (NIST).

11. IEEE STD 802-2014: IEEE Standard for Local and Metropolitan Networks, Overview and Architecture.

1.03 RELATED WORK IN OTHER SECTIONS

A. Refer to Division 00 and Division 01 for allowances and related contractual requirements.

B. Refer to Division 21 for General Fire Protection Provisions and fire suppression pump.

1. The EMCS Contractor shall provide communications integration via BACnet/IP interface to each installed system listed above. BACnet MS/TP or Modbus acceptable if IP interface is not available from equipment manufacturer.

2. The EMCS Contractor shall coordinate with all vendors providing above systems to obtain communications requirements and points lists. Map all available points to EMCS.

C. Refer to Division 22 for General Plumbing Provisions, domestic water heating systems, domestic water pumping systems, and domestic water metering.

1. The EMCS Contractor shall provide communications integration via BACnet/IP interface to each installed system listed above. BACnet MS/TP or Modbus acceptable if IP interface is not available from equipment manufacturer.

2. The EMCS Contractor shall coordinate with all vendors providing above systems to obtain communications requirements and points lists. Map all available points to EMCS.

D. Refer to Division 23 for General Mechanical Provisions for equipment such as air-handling units, terminal units, ventilation fans, variable frequency drives, unitary AC units, etc.

1. The EMCS Contractor shall provide communications integration via BACnet/IP interface to each installed system listed above. BACnet MS/TP or Modbus acceptable if IP interface is not available from equipment manufacturer.

2. The EMCS Contractor shall coordinate with all vendors providing above systems to obtain communications requirements and points lists. Map all available points to EMCS.

E. Refer to Section 26 for General Electrical Provisions for equipment such as electrical switchgear control, electrical power monitoring, emergency generators, lighting control system, etc.

1. The EMCS Contractor shall provide communications integration via BACnet/IP interface to each installed system listed above. BACnet MS/TP or Modbus acceptable if IP interface is not available from equipment manufacturer.

2. The EMCS Contractor shall coordinate with all vendors providing above systems to obtain communications requirements and points lists. Map all available points to EMCS.

1.04 ELECTRICAL POWER PROVISIONS

A. Primary power will be provided under Division 26 by the electrical Contractor to the panel locations indicated on the mechanical & electrical Drawings. Provide step down transformers within panel enclosures. Provide all necessary fuses and circuit protection devices.

B. Power will be provided to the controllers serving fan powered terminal units with electric heat via the control transformer provided with the unit.

C. All components of the EMCS shall be powered from the sources above. Provide final terminations from the locations indicated on the Division 23 Drawings.

D. The EMCS Contractor shall provide any additional control power that is required as part of this contract and not indicated by other. This shall include all conduit, cabling, circuit breakers, etc.

1.05 CONTRACTOR QUALIFICATIONS

A. The EMCS Contractor shall:

1. Have a local office within 100 miles of jobsite before bid date and at a minimum until the completion of the warranty period.

2. Have a local staff of trained personnel capable of giving instructions and providing routine and emergency maintenance on the EMCS, all components and software/firmware and all other elements of the EMCS.

3. Have a proven record of experience in the supply and installation of equivalent EMCS/BACnet systems over a minimum period of five years. Provide documentation of at least three equal and complexity, if so requested by the Owner's Representative.

4. Be a factory certified representative of the native BACnet EMCS manufacturer for design, installation, and service of the proposed system.

5. Have comprehensive local service, training and support facilities for the total EMCS as provided. Maintain local, supplies of essential expendable parts.

6. Have a local 24/7 phone support service.

1.06 SUBMITTALS

A. All documents submitted shall be in native pdf format. Scans are not acceptable.

B. Shop Drawings:

1. The following information shall be included on the cover page for each shop drawing and equipment documentation submittal:

a. Project name with date. Refer to the applicable Specifications by name and number.

b. Provide submittal number and re-submittal number and date as applicable.

c. Provided name and address of Consulting Engineer, Mechanical Contractor, General Contractor

2. Shop drawings shall be CAD generated, plot size of 8-1/2" x 11" or 11" x 17". Drawings shall include diagrams, mounting instructions, installation procedures, equipment details and software descriptions for all aspects of the system to be installed.

3. Provide schematic of systems indicating instrumentation locations, all interconnecting cables between supplied cabinets on a mechanical floor plan.

4. Software specifications and descriptions including operating sequences.

5. Provide a bill of material that indicates specific manufacturer, part number, part description and quantity of each device for all system components.

6. Provide a list of the wire labels to be installed on each end of the control wiring, at the device and the control panel terminal. Labels shall be machine generated, typed and legible with a maximum of 17 characters. The label description “AHU-1 SAT” shall indicate the supply air temperature of AHU-1.

7. Equipment Schematic: Provide an electronic equipment schematic for each piece of mechanical equipment. The schematic shall display all mechanical equipment

8. characteristics including fans, dampers, valves, sensors and other applicable control devices. The schematic shall show wiring terminations to each control device as shown in the submittal and as-build documentation. Control devices shall be labeled by a symbol that can easily be identified in a bill of material that is shown on this graphic. The bill of material shall show the device symbol, description, manufacture and part number.

9. Sequence of Operations: The control sequences shall be viewable for each piece of mechanical equipment and be in a text format as shown in the as built documentation. The sequence of operations shall be selectable at the applicable location for the control program.

10. Provide detail points list on every piece of equipment.

11. Provide technical cut sheets showing all relevant devices and/or information highlighted to distinguish what was installed.

C. Product data. Unless otherwise indicated, submit the following for each type of product provided under work of this Section:

1. Recycled Content:

a. Indicate recycled content; indicate percentage of pre-consumer and post-consumer recycled content per unit of product.

2. Local/Regional Materials:

a. Indicate location of manufacturing facility; indicate distance between manufacturing facility and the project site.

b. Indicate location of extraction, harvesting, and recovery; indicate distance between extraction, harvesting, and recovery and the project site.

3. VOC data:

a. Submit manufacturer's product data for joint compounds. Indicate VOC and chemical component limits of the product. Submit MSDS highlighting VOC and chemical component limits. VOC contents and chemical component limits must be less than the limits of Green Seal’s Standard GS-11.

b. Submit manufacturer’s certification that products comply with Green Seal’s Standard GS-11

c. Submit environmental data in accordance with Table 1 of ASTM E2129 for products provided under work of this Section.

4. Submit the following according to Conditions of the Construction Contract.

a. Product data. Unless otherwise indicated, submit the following for each type of product provided under work of this Section:

D. Control Component Submittals:

1. Component technical data sheets with mounting and installation details.

2. The documentation shall include comprehensive and complete details of the BACnet Interoperability Building Blocks (BIBB) and automation level documentation including address, associated controller type, etc. as required and for the interface to the EMCS.

3. Details of networks/communications equipment, cabling and protocols proposed. Provide schedule of cabling including details of proposed cable types.

4. Module Drawing: Provide an electronic wiring diagram of each control module (as shown in submittal documentation). Diagram shall display wiring schematic and terminations to end devices. Diagram shall display each input and output terminals and label those that are used for the control application. Diagram shall display module type/name and network address.

5. Field sensor and instrumentation Specification sheets. Provide complete manufacturer’s specifications for all items that are supplied. Include vendor name of every item supplied.

6. Schedule and Specification sheets for dampers, valves and actuators.

7. Design and provide layout of all components of panel mounted control devices, terminal strips and power supplies.

E. Color Graphics: Provide sample layout of color graphic representations of the systems for review. The submittal shall indicate the quality of the graphic to be provided with the system with a sample of the specific control points to be included. Control points shall as a minimum include points indicated in the input/output summary, control schematic and primary controlling points defined in the sequences of operation. Provide a sample of a floor plan layout, typical AHU, terminal unit, outside air pretreatment unit, variable frequency drive, exhaust/supply fan, chiller plant and hot water plant. For control points to be provided by equipment BACnet integration provide sample of the control points.

F. Verification Reports. The submittal shall include a sample of the verification reports to be utilized during the verification section of this Specification. Sample reports shall be approved as submitted or be modified by the engineer or Owner’s representative. The verification reports shall be included in the final Operation & Maintenance Manuals. Reports shall be provided in electronic PDF format.

1. Project Systems Verification Form for each controller.

a. General information for each form shall include: project name; associated equipment with mark number; control panel number and location; controller number and model number; controller device instance number (address); MS/TP LAN segment number; verifying technician and date.

b. Each connected control point and device shall contain the following columns with a separate line for each connected physical point: point description (same as device label); input/output number for each connected control device (AI-XX, AO-XX, DI-XX, or DO-XX).

c. Check boxes confirming that the verification tasks have been completed: device location, proper termination at device; proper termination at control panel; sequence is verified; point trend is enabled.

d. Data entry boxes indicating measured/confirmed values: preliminary control point value on the graphic; observed control point value; calibration or adjustment value to correct offset; final displayed point value on the color-graphic; date of verification; engineer or Owner’s representative verification.

2. Control Panel Verification Form for each control panel.

a. General information: panel location and identification number; panel dimensions and NEMA rating; panel properly installed; Class 1 and Class 2 wiring are properly separated; correct voltage to the panel; no shorts or grounds in panel; no induce voltages in panel wiring; point to point termination match submittal; devices are mounted in the correct location; controller software revision number; address of controllers; panel device checkout is complete; panel startup is complete.

3. Sequence of Operation Verification Form per piece of equipment (AHU, VAV, chiller, boiler, etc.).

a. General information: project name; system identifier; building area served; control panel and controller numbers; controller model number and instance number (address); MS/TP LAN segment number; name of verifying technician and date.

b. Each step of the sequence of operation for each piece of equipment shall be documented shall include a "description of test", "input to trigger test" and "expected outcome". A pass/fail checkbox shall indicate each of these actions. Provide space for technician approval with associated date.

G. Operating and Maintenance (O&M) manuals: Provide O&M manual with full information to allow the Owner to operate, maintain and repair installed products. Include trade names with model numbers, color, dimensions and other physical characteristics.

1. Format: Produce on 8-1/2 x 11-inch pages, and bind in 3-ring/binders with durable plastic covers. Label binder covers with printed title "OPERATION AND MAINTENANCE MANUAL", title of project, and subject matter and "Number _ of _" of binder. Provide substantial dividers tabbed and titled by section/component number.

2. Table of Contents for each volume:

a. Part 1: Directory with name, address and telephone number of Designer, Contractor and Subcontractors and Suppliers for each Project Manual section.

b. Part 2: Operation and maintenance instructions, arranged by Project Manual Section number where practical and where not, by system. Include:

1) Product design criteria, functions, normal operating characteristic and limiting conditions. Installation, alignment, adjustment, checking instructions and troubleshooting guide. Operating instructions for start-up, normal operation,

2) regulation and control, normal shutdown and emergency shutdown. Test data and performance curves.

3) Spare parts list for operating products, prepared by manufacturers including detailed drawings giving location of each maintainable part, lists of spares recommended for user- service inventory and nearest source of in-stock spares.

H. Record Documentation:

1. Details of all alarm, diagnostic, error and other messages. Detail the Operator action to be taken for each instance.

2. Detail special programs provided and provide a complete programming instruction manual. Detail operation of all software applications.

3. Detailed list of the database for all installed devices.

4. Record drawings shall be CAD generated and shall include final locations and point ID for each monitored and controlled device.

5. In additional to the required hard-copies, provide electronic copies on a USB Drive with all of the record documentation in PDF format and a USB Drive containing backup copies of all installed software and graphics.

6. Provide an excel spreadsheet for tracking and maintenance by equipment type. Coordinate with Owner for database and template requirement.

7. Online as-built documentation: provide digital replications of as-builts that shall be accessible from each equipment graphic controlled or monitored by the EMCS.

1.07 WARRANTY

A. Warranty work and the equipment provided under this contract shall be for a period of one (1) year from the date of Substantial Completion. Warranty shall cover all components, system software, parts and assemblies supplied by this Contractor and shall be guaranteed against defects in materials and workmanship for one (1) year from the date of Substantial Completion. If manufacturer warranty on a product is longer than (1) year, Contractor is responsible for honoring and coordinating the warranty of that product up to the end of manufacturer warranty. Labor to troubleshoot, repair, reprogram or replace system components that have failed due to defects in materials and workmanship shall be provided by this Contractor at no charge to the Owner during the warranty period. All corrective software modifications made during warranty service periods shall be updated on all user documentation and on user and manufacturer archived software. All warranty work shall be performed by the EMCS Contractor’s local service group.

B. Warranty shall not include routine maintenance, e.g., equipment cleaning, mechanical parts lubrication, pilot lamp replacement, operational testing, etc. Warranty shall not cover repair or replacement of equipment damaged by under- or over-voltage, misuse, lack of proper maintenance, lightning, water damage from weather or piping failure.

C. Hardware and software personnel supporting this warranty agreement shall provide on- site or off-site service in a timely manner after failure notification to the EMCS Contractor. The maximum acceptable response time to provide this service at the site shall be 24 hours, during normal working hours.

1.08 OPERATOR WORKSTATION (OWS)

A. The Operator Workstation shall be any personal computer, connected to the WAN/LAN, with appropriate web browser software installed.

1.09 ENGINEERING WORKSTATION (EWS)

A. The Engineering Workstation shall be any personal computer or virtual pc and/or server, connected to the WAN/LAN, with a registered copy of the EMCS Contractor supplied engineering and/or programming software installed. The EMCS Contractor shall provide at least one copy of all required software(s) and files, to enable the Owner complete editing/programming functions of all controllers, graphics, and control logic.

B. The EMCS shall provide one (1) virtual pc and/or server which is compatible with the performance required by the EMCS Engineering Software. It shall be able to be reached locally and remotely as needed.

PART 2 - PRODUCTS

2.01 ENVIRONMENTALLY PREFERABLE PRODUCTS

A. Provide environmentally preferable products to the greatest extent possible.

1. To the greatest extent possible, provide products and materials that promote stewardship of the earth's resources, promote good indoor environmental quality (IEQ), and promote efficiencies in operational performance.

B. Provide products listed on the EPA Comprehensive Procurement Guidelines to the greatest extent practicable.

C. Provide products listed on the USGBC Directory of Products and Services to the greatest extent possible.

2.02 RECYCLED CONTENT

A. Provide recycled content products to the greatest extent possible.

1. To the greatest extent possible, provide materials with recycled content such that the sum of post-consumer recycled content plus one-half of the post-industrial content constitutes at least 10% of the total value of the materials in the project.

2.03 REGIONAL MATERIALS

A. Provide Regional materials and products to the greatest extent possible that are extracted and manufactured within the region.

1. Provide materials and products that use a minimum of 20 % of building products that are manufactured regionally within a radius of 500 miles from the project site.

a. Manufacturing refers to the final assembly of components into the building product that is furnished and installed by the tradesman.

2. Of the regionally manufactured materials used and documented, use a minimum of 50% of building materials and products that are extracted, harvested or recovered (as well as manufactured) within 500 miles of the project site.

2.04 CONTROL SYSTEM

A. Acceptable Manufacturer

1. Temperature control system: The BMCS system shall be fully integrated through the new operator workstation in compliance with the performance requirements set forth in this Specification. All equipment provided herein shall be required to communicate through a facility wide EMCS workstation by means of full binary interface to maintain operations for school district personnel. Any additional software or hardware required to maintain the integrity of the campus wide system shall be included in the bid price. DDC hardware and software introduced as part of this project shall in no way alter the integrity of the campus wide system.

2. Temperature control system:

   a. Manufacturers:

      1) Tracer by Trane

      2) Automated Logic

3. Installer is responsible for quality and satisfactory operation of devices, and for overall performance of system. New system shall integrate with existing campus BAS system.

4. Other manufacturers desiring approval shall comply with Section 01 60 00.

B. Temperature Control System:

1. Include:

   a. Temperature sensors.

   b. Humidity sensors.

   c. Controllers.

   d. Switches.

   e. Relays.

   f. Dampers.

   g. Damper operators.

   h. Thermostats.

   i. Humidistats.

   j. Hygrometers.

   k. Other associated controls required to maintain conditions described in detail on Drawings, together with thermometers, gauges and other accessory equipment.

2. Provide complete system of wiring and air piping as necessary to fill intent of these Specifications.

3. Control sequences indicated illustrate basic control functions only.

4. Provide additional controls required to meet intent of these Specifications and make a complete functional system.

5. Space temperature and humidity control.

6. Control of air handling units.

7. Control of exhaust systems.

8. Control of cooling systems.

9. Control of heating systems.

10. Control panels.

C. Where electronic sensing is used, furnish amplifier relays and transformer complete with overload protection.

D. Electrical drawings indicate type of motor control required by equipment.

2.05 PRIMARY NETWORK SERVER (PNS)

2.06 The EMCS shall be fully integrated and a continuation of Stafford MSD's existing Johnson Controls Server and system without exception. The EMCS Contractor shall either upgrade or provide a new ADX Server as part of this system if the existing server is not fully compatible with new Metasys EMCS being provided. The ADX Server shall utilize the Internet and provide efficient integration of standard open protocols. The ADX Server shall maintain comprehensive database management, alarm management and messaging services, and graphical user interface as follows:

1. Support an unlimited number of users and up to 5 concurrent users over the Internet/intranet with a standard web browser to access alarms, trend logs, graphics, schedules and configuration data. Access to the PNS shall be password protected utilizing authentication and encryption techniques. An audit trail of database changes indicating user, time stamp, and audit action shall be provided.

2. Enterprise level information exchange using an SQL database and HTML5 formats.

3. Synchronize controller databases, database storage scheduling, control and energy management routines

4. Alarm processing and routing shall include email, SMS text messages and paging as needed by the Owner.

5. HTML5 based help system that includes comprehensive online system documentation.

6. Support of multiple Network Area Controllers (NAC) connected to a Local Area Network.

7. Aggregate data and provide visualization interface and dashboard that includes, but not limited to, graphs, gauges, charts of relevant trends and energy usage.

B. Server Functions

1. It shall be possible to access all Network Area Controllers (NAC) via a single connection to the server through the Ethernet LAN. In this configuration, each Network Area Controller can be accessed from a single user login.

2. The PNS shall provide the following functions, at a minimum:

   a. The server shall provide complete access to distributed global data. The server shall provide the ability to execute global control strategies based on control and data objects in any NAC in the network, local or remote.

   b. The server shall include a master clock service for its subsystems and provide time synchronization for all NACs.

   c. The server shall provide scheduling for all NACs and their underlying field control devices.

   d. The server shall provide demand limiting control that operates across all NACs. The network server shall be capable of multiple demand limiting programs for sites with multiple meters and or multiple sources of energy. Each demand program shall be capable of supporting separate demand shed lists for effective demand control.

   e. The server shall implement the BACnet Command Prioritization scheme (16 levels) for safe and effective contention resolution of all commands issued to NACs. Each Network Area Controller supported by the server shall have the ability to archive its log data, alarm data and database to the server, automatically. Archiving options shall be user-defined including archive time and archive frequency.

   f. The server shall provide central alarm management for all NACs supported by the server. Alarm management shall include: routing of alarms to a video display, a printer, an email and pager; view and acknowledge alarms; query alarm logs based on user-defined parameters

   g. The system will be provided with a dedicated alarm window or console. This window will notify the operator of an alarm condition, and allow the operator to view details of the alarm and acknowledge the alarm. The use of the Alarm Console can be enabled or disabled by the system administrator.

   h. The server shall provide central management of logged data for all NACs supported by the server. Logged data shall include process logs, runtime and event counter logs, audit logs and error logs. Log data management shall include: viewing and printing log data; exporting log data to other software applications; query log data based on user-defined parameters. A report log of manually overridden points shall be part of the management system.

   i. Storage of the graphical screens shall be in the network web server, without requiring any graphics to be stored on the client machine. Systems that require graphics storage on each client are not acceptable.

   j. Modify common application objects, such as schedules, calendars, and set-points in a graphical manner. Schedule times will be adjusted using a graphical slider. Holidays shall be set by using a graphical calendar.

k. Commands to start and stop binary objects shall be done by right-clicking the selected object and selecting the appropriate command from the pop- up menu. No entry of text shall be required.

l. The Primary Network Server shall be capable of supporting at the very minimum the following open system drivers.

1) BACnet/IP

2) Modbus TCP

C. Network Server Platform Requirements

1. Rack-Mounted Server Computer Hardware: DELL PowerEdge R230 or equal, Intel Xeon Quad E3-1225 V53.3 GHz or higher, 16GB RAM, 1TB hard drive, video card, 22" color monitor, and Ethernet adapter 1Gbps or higher.

2. Operating system software shall be Microsoft Windows 10 Professional or higher. Exceptions shall be pre-approved by Owner.

2.07 NETWORK AREA AUTOMATION ENGINE (NAE)

A. General

1. The Network Automation Engine (NAE) shall be a fully user-programmable, supervisory controller. The NAE shall monitor the network of distributed application-specific controllers, provide global strategy and direction, and communicate on a peer-to-peer basis with other Network Engines.

2. Automation network – The NAE shall reside on the automation network and shall support a subnet of system controllers.

3. User Interface – Each NAE shall have the ability to deliver a web based User Interface using the Site Management Portal functionality previously described. All computers connected physically or virtually to the automation network shall have access to the web based user interface.

a. The web based user interface software shall be embedded in the NAE. Systems that require a local copy of the system database on the user's personal computer are not acceptable.

b. The NAE shall support a minimum of two (2) concurrent users.

c. The web-based user shall have the capability to access all system data through a single NAE.

d. Remote users connected to the network through an Internet Service Provider (ISP) or telephone dial up shall also have total system access through one NAE.

e. Systems that require the user to address more than one NAE to access all system information are not acceptable.

f. The NAE shall have the capability of generating web based user interface graphics. The graphics capability shall be embedded in the NAE.

g. Systems that only support user interface graphics from a central database or require the graphics to reside on the user's personal computer are not acceptable.

h. The web based user interface shall support the following functions using a standard version of Microsoft Internet Explorer:

1) Configuration

2) Commissioning

3) Data Archiving

4) Monitoring

5) Commanding

6) System Diagnostics

i. Systems that require workstation software or modified web browsers for system queries are not acceptable.

j. The NAE shall allow temporary use of portable devices without interrupting the normal operation of permanently connected modems.

4. Processor – The NAE shall be microprocessor-based with a minimum word size of 32 bits. The NAE shall be a multi-tasking, multi-user, and real-time digital control processor. Standard operating systems shall be employed. NAE size and capability shall be sufficient to fully meet the requirements of this Specification.

5. Memory – Each NAE shall have sufficient memory to support its own operating system, databases, and control programs, and to provide supervisory control for all control level devices.

6. User Authentication – The NAE shall support local users, Active Directory users, Microsoft Office 365 users and Remote Authentication Dial-in User Service (RADIUS).

7. Password Security – Access to the embedded user interface shall require a password of 8 to 50 characters including a minimum of one lower case letter, one upper case letter, one number, and one special character. An alarm shall be generated after three unsuccessful attempts within 15 minutes and the user shall be denied access until permission is renewed by a system administrator.

8. Network Security – Communication between the NAE and other system networked devices including additional Network Engines, Application and Data Servers, Open Data Servers (BACnet listed OWS), and user interface clients shall be encrypted and support HTTPS with Transport Level Security (TLS) Version 1.2. Self-signed certificates are to be provided with the option of configuring trusted certificates.

9. Hardware Real Time Clock – The NAE shall include an integrated, hardware-Based, real-time clock.

10. Diagnostics – The NAE shall continuously perform self-diagnostics, communication diagnosis, and diagnosis of all panel components. The Network Automation Engine shall provide both local and remote annunciation of any detected component failures, low battery conditions, or repeated failures to establish communication.

11. Power Failure – In the event of the loss of normal power, The NAE shall continue to operate for a user adjustable period of up to 10 minutes after which there shall be an orderly shutdown of all programs to prevent the loss of database or operating system software.

    a. During a loss of normal power, the control sequences shall go to the normal system shutdown conditions. All critical configuration data shall be saved into Flash memory.

    b. Upon restoration of normal power and after a minimum off-time delay, the controller shall automatically resume full operation without manual intervention through a normal soft-start sequence.

12. Certification – The NAE shall be listed by UL.

13. Controller network – The NAE shall selectively support the following communication protocols on the controller network:

    a. The NAE shall support BACnet Standard MS/TP Bus Protocol ASHRAE SSPC-135 on the controller network.

        1) The NAE shall support Remote field bus integration via a BACnet IP to MS/TP router.

        2) The NAE shall be BTL certified and carry the BTL Label.

        3) The NAE shall be tested and certified as a BACnet Building Controller (B-BC).

        4) A BACnet Protocol Implementation Conformance Statement shall be provided for the NAE.

        5) The Conformance Statements shall be submitted 10 days prior to bidding.

    b. The NAE shall support LonWorks enabled devices using the Free Topology Transceiver FTT10.

        1) All LonWorks controls devices shall be LonMark® certified.

B. Network Automation Engine – Large, Dual Trunk

1. The NAE shall support a minimum of:

a. One Hundred (100) BACnet Standard MS/TP controllers per trunk (200 total).

b. Two Hundred Fifty Five (255) LonWorks FTT10 Free Topology control devices.

c. One Hundred (100) N2 control devices per trunk (200 total).

2. The NAE shall include troubleshooting LED indicators to identify the following conditions:

3. Power – On/Off.

a. Ethernet Traffic – Ethernet Traffic/No Ethernet Traffic.

b. Ethernet Connection Speed – 10 Mbps/100 Mbps/1000 Mbps.

c. FC Bus A – Normal Communications/No Field Communications.

d. FC Bus B – Normal Communications/No Field Communications.

e. Peer Communication – Data Traffic between NAE Devices.

f. Run – NAE Running/NAE in Startup/NAE Shutting Down/Software Not Running.

g. Bat Fault – Battery Defective, Data Protection Battery Not Installed.

h. 24 VAC – 24 VAC Present/Loss of 24 VAC.

i. Fault – General Fault.

j. Modem RX – NAE Modem Receiving Data (as required).

k. Modem TX – NAE Modem Transmitting Data (as required).

4. Communications Ports – The NAE shall provide the following ports for operation of operator I/O devices, such as industry-standard computers, modems, and portable operator’s terminals.

a. Two (2) USB port.

b. Two (2) RS-232 serial data communication port.

c. Two (2) RS-485 port.

d. One (1) Ethernet port.

5. Provide Johnson Controls NAE-55XX or approved equal as indicated on plans.

2.08 FIELD EQUIPMENT CONTROLLERS (FEC)

A. The Field Equipment Controller (FEC) shall be a fully user-programmable, digital controller that communicates via BACnet MS/TP protocol or optionally via N2Open.

1. The FEC shall support BACnet Standard MS/TP Bus Protocol ASHRAE SSPC-135 on the controller network.

2. The FEC shall be BTL certified and carry the BTL Label.

3. The FEC shall be tested and certified as a BACnet Application Specific Controller (B-ASC).

4. A BACnet Protocol Implementation Conformance Statement shall be provided for the FEC.

5. The Conformance Statement shall be submitted 10 days prior to bidding.

B. The FEC shall employ finite state programming to eliminate unnecessary conflicts between control functions at crossover points in their operational sequences. Suppliers using non-state based DDC shall provide separate control strategy diagrams for all controlled functions in their submittals.

C. Controllers shall be factory programmed with a continuous adaptive tuning algorithm that senses changes in the physical environment and continually adjusts loop tuning parameters appropriately. Controllers that require manual tuning of loops or perform automatic tuning on command only shall not be acceptable. The FEC shall be assembled in a plenum-rated plastic housing with flammability rated to UL94-5VB.

D. The FEC shall include troubleshooting LED indicators to identify the following conditions:

1. Power On.

2. Power Off.

3. Download or Startup in progress, not ready for normal operation.

4. No Faults.

5. Device Fault.

6. Field Controller Bus – Normal Data Transmission.

7. Field Controller Bus – No Data Transmission.

8. Field Controller Bus – No Communication.

9. SA Bus – Normal Data Transmission.

10. SA Bus – No Data Transmission.

11. SA Bus – No Communication.

E. The FEC shall accommodate the direct wiring of analog and binary I/O field points with the following minimum A/D and D/A conversion resolution.

1. Provide a minimum 15 bit A/D resolution for analog inputs.

2. Provide a minimum 15 bit D/A resolution for analog outputs.

F. The FEC shall support the following types of inputs and outputs:

1. Universal Inputs – shall be configured to monitor any of the following:

2. Analog Input, Voltage Mode.

3. Analog Input, Current Mode.

4. Analog Input, Resistive Mode.

5. Binary Input, Dry Contact Maintained Mode.

6. Binary Input, Pulse Counter Mode.

7. Binary Inputs – shall be configured to monitor either of the following:

8. Dry Contact Maintained Mode.

9. Pulse Counter Mode.

10. Analog Outputs – shall be configured to output either of the following:

11. Analog Output, Voltage Mode.

12. Analog Output, current Mode.

13. Binary Outputs – shall output the following:

14. 24 VAC Triac.

15. Configurable Outputs – shall be capable of the following:

16. Analog Output, Voltage Mode.

17. Binary Output Mode.

18. The FEC shall have the ability to reside on a Field Controller Bus (FC Bus).

G. The FC Bus shall be a MS/TP Bus supporting BACnet Standard protocol SSPC-135.

1. The FC Bus shall support communications between the FECs and the NAE.

2. The FC Bus shall also support Input/Output Module (IOM) communications with the FEC and with the NAE.

3. The FC Bus shall support a minimum of 100 IOMs and FECs in any combination.

4. The FC Bus shall operate at a maximum distance of 15,000 Ft. between the FEC and the furthest connected device.

H. The FEC shall have the ability to monitor and control a network of sensors and actuators over a SA Bus.

1. The SA Bus shall be a MS/TP Bus supporting BACnet Standard Protocol SSPC-135.

2. The SA Bus shall support a minimum of 10 devices per trunk.

3. The SA Bus shall operate at a maximum distance of 1,200 Ft. between the FEC and the furthest connected device.

I. The FEC shall have the capability to execute complex control sequences involving direct wired I/O points as well as input and output devices communicating over the FC Bus or the SA Bus.

J. The FEC shall support, but not be limited to, the following applications.

1. Chilled water/central plant applications including but not limited to:

2. Selection and sequencing of up to eight chillers of different sizes.

3. Selection and sequencing of up to eight (each) primary and secondary chilled water pumps of varying pumping capacities.

4. Selection and sequencing of up to eight condenser water pumps.

5. Selection and sequencing of cooling towers and bypass valve, including single speed, multi-speed, and Vernier control.

6. Selection and sequencing of up to four heat exchangers, of different capacities.

7. A proven and documented central cooling plant optimization program that incorporates custom equipment efficiency profiles, without rewriting software code, in order to meet the building load using the least amount of energy as calculated.

8. The use of advanced control algorithms that apply equipment specific parameters, including operational limits and efficiency profiles, in order to determine equipment start and runtime preferences.

9. Identification of the most efficient equipment combination and automatic control of state and speed of all necessary equipment to balance runtime, optimize timing and sequencing and ensure the efficiency and stability of the central cooling plant.

10. Control definition for the chiller plant in a single FAC, FEC, or NCE, as supported by available memory and point I/O, or capable of being split across multiple FACs, FECs, or NCEs.

11. Heating central plant applications.

12. Built-up air handling units for special applications.

13. Terminal & package units.

14. Special programs as required for systems control.

K. The FEC shall support a Local Controller Display either as an integral part of the FEC or as a remote device communicating over the SA Bus.

1. The Display shall use a BACnet Standard SSPC-135 MS/TP protocol.

2. The Display shall allow the user to view monitored points without logging into the system.

3. The Display shall allow the user to view and change setpoints, modes of operation, and parameters.

4. The Display shall provide password protection with user adjustable password timeout.

5. The Display shall be menu driven with separate paths for:

6. Input/Output.

7. Parameter/Setpoint.

8. Overrides.

9. The Display shall use easy-to-read English text messages.

10. The Display shall allow the user to select the points to be shown and in what order.

11. The Display shall support a back lit LCD with adjustable contrast and brightens and automatic backlight brightening during user interaction.

12. The display shall be a minimum of 4 lines and a minimum of 20 characters per line.

13. The Display shall have a keypad with no more than 6 keys.

14. The Display shall be panel mountable.

L. Provide Johnson Controls FEC or approved equal as shown on plans.

2.09 VAV MODULAR ASSEMBLY (VMA)

A. The VAV Modular Assembly (VMA) shall provide both standalone and networked DDC of pressure-independent, VAV terminal units. It shall address both single and dual duct applications.

B. The VMA shall be BTL certified and carry the BTL Label.

1. The VMA shall be tested and certified as a BACnet Application Specific Controller (B-ASC).

2. A BACnet Protocol Implementation Conformance Statement shall be provided for the VMA.

3. The Conformance Statement shall be submitted 10 days prior to bidding.

C. The VAV Modular Assembly shall communicate over the Field Controller Bus using BACnet Standard protocol SSPC-135.

D. The VAV Modular Assembly shall have internal electrical isolation for AC power, DC inputs, and MS/TP communications as provided. An externally mounted isolation transformer shall not be acceptable.

E. The VAV Modular Assembly shall be a configurable digital controller with integral differential pressure transducer and damper actuator. All components shall be connected and mounted as a single assembly that can be removed as one piece. Alternate configurations shall be available as follows:

1. A configurable digital controller with integral differential pressure transducer but without a damper actuator – for controlling large VAV boxes that require high torque.

2. A configurable digital controller with an integral damper actuator but without a differential pressure transducer –for commercial zoning applications or for pressure-dependent VAV box applications.

3. A configurable digital controller with an integral damper actuator and ball valve linkage but without a differential pressure transducer –for chilled beam applications.

F. The VAV Modular Assembly shall be assembled in a plenum-rated plastic housing with flammability rated to UL94-5VB or the controller is designed and suitable for use in other environmental air space (plenums) in accordance with Section 300.252(C) of the National Electrical Code.

G. The integral damper actuator shall be a fast response stepper motor capable of stroking 90 degrees in 60 seconds for quick damper positioning to speed commissioning and troubleshooting tasks.

H. The controller shall determine airflow by a state-of-the-art digital non-flow pressure sensor to provide 14-bit resolution with bidirectional flow operation that supports automatic correction for polarity on high- and low-pressure DP tube connections; this pressure sensor eliminates high- and low-pressure connection mistakes.

I. Each controller shall have the ability to automatically calibrate the flow sensor to eliminate pressure transducer offset error due to ambient temperature / humidity effects.

J. The controller shall utilize a proportional plus integration (PI) algorithm for the space temperature control loops.

K. Each controller shall continuously, adaptively tune the control algorithms to improve control and controller reliability through reduced actuator duty cycle. In addition, this tuning reduces commissioning costs, and eliminates the maintenance costs of manually re-tuning loops to compensate for seasonal or other load changes.

L. The controller shall provide the ability to download and upload VMA configuration files, both locally and via the communications network. Controllers shall be able to be loaded individually or as a group.

M. Control setpoint changes initiated over the network shall be written to VMA non-volatile memory to prevent loss of setpoint changes and to provide consistent operation in the event of communication failure.

N. The controller firmware shall be flash-upgradeable remotely via the communications bus to minimize costs of feature enhancements.

O. The controller shall provide fail-soft operation if the airflow signal becomes unreliable, by automatically reverting to a pressure-dependent control mode.

P. The controller shall interface with balancer tools that allow automatic recalculation of box flow pickup gain (“K” factor), and the ability to directly command the airflow control loop to the box minimum and maximum airflow setpoints.

Q. Controller shall have on-board diagnostics. These diagnostics shall consist of control loop performance measurements executing at each control loop’s sample interval, which may be used to continuously monitor and document system performance. The VMA shall calculate Exponentially Weighted Moving Averages (EWMA) for each of the following. These metrics shall be available to the end user for efficient management of the VAV terminals.

1. Absolute temperature loop error.
2. Signed temperature loop error.
3. Absolute airflow loop error.
4. Signed airflow loop error.
5. Average damper actuator duty cycle.

R. The controller shall detect system error conditions to assist in managing the VAV zones. The error conditions shall consist of:

1. Unreliable space temperature sensor.
2. Unreliable differential pressure sensor.
3. Starved box.
4. Actuator stall.
5. Insufficient cooling.
6. Insufficient heating.

S. The controller shall provide a flow test function to view damper position vs. flow in a graphical format. The information would alert the user to check damper position. The VMA would also provide a method to calculate actuator duty cycle as an indicator of damper actuator runtime.

T. The controller shall provide a compliant interface for ASHRAE Standard 62-1989 (indoor air quality), and shall be capable of resetting the box minimum airflow based on the percent of outdoor air in the primary air stream.

U. The controller shall comply with ASHRAE Standard 90.1 (energy efficiency) by preventing simultaneous heating and cooling, and where the control strategy requires reset of airflow while in reheat, by modulating the box reheat device fully open prior to increasing the airflow in the heating sequence.

V. Inputs:

1. Analog inputs with user-defined ranges shall monitor the following analog signals, without the addition of equipment outside the terminal controller cabinet:

2. 0-10 VDC Sensors.

3. 1000ohm RTDs.

4. NTC Thermistors.

5. The AVMA shall provide minimum 15 bit A/D resolution for analog inputs.

6. Binary inputs shall monitor dry contact closures. Input shall provide filtering to eliminate false signals resulting from input “bouncing.”

7. For noise immunity, the inputs shall be internally isolated from power, communications, and output circuits.

8. Provide side loop application for humidity control.

W. Outputs

1. Analog outputs shall provide the following control outputs:

2. 0-10 VDC

3. The AVMA shall provide minimum 15 bit D/A resolution of analog outputs

4. Binary outputs shall provide a SPST Triac output rated for 500mA at 24 VAC.

5. For noise immunity, the outputs shall be internally isolated from power, communications, and other output circuits.

X. Application Configuration

1. The VAV Modular Assembly shall be configured with a software tool that provides a simple Question/Answer format for developing applications and downloading.

Y. Sensor Support

1. The VMA shall communicate over the SA Bus with a Network Sensor.

2. The VMA shall support an LCD display room sensor.

3. The VMA shall also support standard room sensors as defined by analog input requirements.

4. The VMA shall support humidity sensors defined by the AI side loop.

Z. Provide Johnson Controls VMAxx or approved equal as shown on plans.

2.10 AIR HANDLING UNIT CONTROLLER

A. All devices required for single loop control shall be terminated on a single controller, (for example, AHU static pressure control. The differential pressure sensor and the VFD ramp signal.)

B. The EMCS Contractor shall provide controllers required for chilled/hot water and DX/electric heat air handling units and fan coil units. Provide an enclosure to house the controller and associated components including suitable mounting brackets shall be NEMA 1 rated and located outside the FCUs.

C. The controller shall be capable of monitoring and controlling the following parameters per the sequences of operation and input/output summary; space temperature; space relative humidity sensor; cooling/heating stage control or modulating valve control; fan on/off control and status; supply air sensor; occupancy sensor; carbon dioxide sensor; VFD control and monitoring.

2.11 SOFTWARE OVERVIEW

A. Dedicated Web Based User Interface

1. Where indicated on plans the BMS Contractor shall provide and install a personal computer for command entry, information management, network alarm management, and database management functions. Real-time control functions, including scheduling, history collection and alarming, shall be resident in the BMS Network Automation Engines and Data Server(s) to facilitate greater fault tolerance and reliability.

2. Dedicated User Interface Architecture – The architecture of the computer shall be implemented to conform to industry standards, so that it can accommodate applications provided by the BMS Contractor and by other third party applications suppliers, including but not limited to Microsoft Office Applications. Specifically it must be implemented to conform to the following interface standards.

a. Microsoft Internet Explorer 11.0 or Edge for user interface functions.

b. Microsoft Office Professional for creation, modification and maintenance of reports, sequences other necessary building management functions.

c. Microsoft Outlook or other e-mail program for supplemental alarm functionality and communication of system events, and reports.

d. Required network operating system for exchange of data and network functions such as printing of reports, trends and specific system summaries.

e. PC Hardware/Software – The personal computer(s) shall be configured as specified in the Computing Hardware and Software section.

f. Provide one operational device as herein specified and located on plans.

3. Mobile, Web Based, User Interface (MUI)

a. General

1) The mobile, web based, user interface shall be HTML5-compliant and provide device-agnostic access to the system from smartphones, tablets, portable and desktop computers. User Interfaces that require software installation on the client device (e.g. Java, MicrosoftSilverlight®, Adobe® Flash®), or software downloads from an online app store shall not be acceptable for these purposes.

2) The mobile user interface shall provide system operators with a simple location-based navigation approach to finding information, including the ability to search for any location by name and to bookmark a location in a standard browser.

3) The mobile user interface shall organize and display information using customer specific locations and spaces. At a minimum, the user interface shall provide:

a) Organization of all space, equipment and point information in a familiar way (using standard equipment names and location descriptions), reducing the need for extensive training prior to use.

b) A navigation mechanism or tree for users to select the specific location or space for accessing information – only spaces and locations in the navigation tree or equipment serving that space, nothing more.

c) The ability to search for and/or bookmark any location, space, or equipment by name for quick access to critical or troublesome areas.

d) Application of the same navigation mechanisms across any client device (e.g. Smart phone, tablet, personal computer) for consistency and ease of use.

4) The same user interface elements shall be accessible from any type of personal computer or mobile device running any type of operating system supported (e.g. iOS, Android, Windows®). It shall automatically adapt and optimize the display for the screen size and touch screen navigation.

5) The user interface shall provide support for up to 50 concurrent users from individuals with defined access to the system.

b. Navigation Trees

1) A dedicated location based navigation tree shall be provided as part of the user interface in order to navigate to specific places within the facility on a hierarchical basis (typ. Facility, Building, Wing, Floor, Room.)

2) The location-based tree shall use place names familiar to the operator without training or familiarization regarding special codes and conventions utilized in the generation of the BMS.

3) Clicking or tapping on a location name in the tree shall display the home page associated with the space and simultaneously expand the tree to display the next level of spaces below the one selected.

4) It shall be possible for qualified users to view a navigation tree of devices connected to the BMS network in order to enable troubleshooting of equipment and communications. Clicking or tapping on the Network Icon at the top of the Navigation Tree will access this alternate view. Users without the necessary access rights shall not see the Network Icon.

5) A click or tap on a device in the network tree shall display a dashboard for that device including information regarding related equipment and access to a separate focus view of commandable points associated with the piece of hardware. A click or tap on such a point shall display a control dialogue box allowing the user to modify or command that point as indicated. The dialog box shall contain an annotation box for describing why the action was taken or special circumstances that apply.

6) Specific hardware and software types in the Network tree shall also include access to one or more the following views in their dashboard depending on hardware type or network element (e.g. MS/TP trunk):

a) Summary View

b) Diagnostic View

c) Network View

d) Trend View

7) It shall be possible to hide the Network Tree and return to the Spaces Tree at any time by clicking on the Spaces Icon above the tree.

c. Dashboard Displays

1) The user interface shall provide the ability to view equipment visualizations, floor plans, and/or other graphics on mobile or desktop client devices in a browser environment, without the need for additional plugins or software.

Graphics shall be accessible via a space (for floorplans, campus maps, etc.) or equipment dashboard.

2) Standard dashboards shall be configured for each defined space including one of the following predefined or custom elements:

a) Equipment Serving Space

b) Potential Problem Areas

c) Equipment Summary

d) Graphic Display (if specified)

e) Schedule

3) Standard dashboards shall be configured for each system or device (typ. mechanical or electrical equipment) including the following predefined or custom elements:

a) Trend

b) Equipment Activity Summary

c) Equipment Relationships Summary

d) Equipment Data

e) Graphic Display (if specified)

f) Schedule

4) Users with appropriate permissions shall have access to a Dashboards Manager that can change the display order of Summaries and Data elements, add or remove elements and apply custom dashboards layouts to equipment and space by type.

5) Dashboard Manager shall apply dashboards to spaces or equipment based on the viewing platform (Desktop/Tablet or Phone) in order to tailor the user experience to the needs of the specific user base.

6) Default dashboard displays by space and equipment type shall be created per the guidelines in this specification or by mutual agreement with the owner's representative.

d. Alarm Management

1) The user interface shall provide a single display of all potential issues in a facility including items currently in alarm, warning, override, out-of-service and offline.

2) The user interface shall provide notification of new alarms, visually and audibly.

3) The user interface shall provide the ability to view a summary of alarms, including a chart of the number of alarms in each of the defined alarm priority ranges. The priority ranges should be filterable.

4) The user interface shall provide the capability to view multiple occurrences of the same alarm, ultimately providing the ability to acknowledge or discard all occurrences of the alarm in a single action.

5) The user interface shall provide the capability to view, and filter on, all alarms present in a well-defined mechanical system using the equipment serving equipment relationships.

6) The user interface shall provide the capability to acknowledge and discard all occurrences of at least 1000 alarms in one operation.

7) The user interface shall provide the user with the understanding of what physical space is being affected when an alarm occurs. The user interface shall provide the ability to filter alarms by physical space affected when the alarm occurred.

8) The user interface shall provide the capability to monitor alarms 24/7 without requiring an active login to the system, accessible via segregated web page. The user interface shall provide the capability to enabled or disable the 24/7 alarm monitor mode if desired.

e. Equipment Activity Summary

1) The user interface shall provide a filterable, single display, of all activity related to a specific piece of equipment including user changes, discarded user changes, pending alarms, discarded alarms, and acknowledged alarms for at least one year of historical data.

2) Items shall be listed in timed order with the latest activity at the top of the list.

3) Filters shall allow only specific activities for specific data points occurring within a specific time and date window to be displayed.

4) It shall be possible to export a .csv copy of the currently displayed summary by clicking or tapping on the export icon.

5) It shall be possible to create a custom trend graph containing the data shown in the currently displayed summary by tapping or clicking on the trend icon in the header bar and selecting the specific points to trend in the resulting selection panel.

6) Clicking on the information icon in front of any displayed activity listed in the summary shall expand the display to include the name of the user, server

time, value prior to the activity, the ability to annotate the activity and a user selectable icon for displaying a trend graph of the point.

f. Equipment Relationships Summary

1) The user interface shall provide a summary of all equipment and spaces related to the operation of the system or device currently selected for viewing.

2) Include the capability to navigate to the home page of any related piece of equipment or space with a single click or tap on the desired element.

g. Equipment Data Summary

1) The user interface shall provide a summary of all data pertaining to a particular piece of mechanical or electrical equipment in a tabular format.

2) Clicking or tapping on any value in the summary shall display a related command panel allowing the user to command, override, or change service condition of the point selected and to annotate such actions for future reference.

3) It shall be possible to export a .pdf copy of the report with a single click on the associated export icon.

h. Equipment Serving Space Summary

1) The user interface shall provide a summary of all mechanical and electrical equipment as defined in the points list that serves a selected space from the navigation tree.

2) The summary shall be capable of including a subset of the viewable points for each system representing the key elements of interest to operators without subjecting them to long lists of points irrelevant to basic operation.

3) Clicking or tapping on any item in the summary shall navigate to the item's assigned home page in the user interface.

4) It shall be possible to view a custom trend of information contained in the summary with a single click of the trend icon residing in the title header.

5) It shall be possible to display specific systems and points by filtering equipment types desired.

6) Because the data is intended to be a snapshot of the current conditions in the space it shall not dynamically update but a click or tap on the update icon at any time performs that function.

i. Potential Problem Areas

1) The user interface shall provide a summary of all points in the system related to the space that are not operating correctly (e.g. alarm, off normal or not communicating correctly) in order to provide the operator with a quick update on current conditions.

2) The information shall include:

    a) Point status (via color.)

    b) Point name.

    c) Value of the point when the summary was taken.

    d) Equipment that contains the offending point.

    e) Space that is served by that equipment.

3) Data points in the summary may be filtered by one or more types of off-normal condition (e.g. above setpoint, offline and overridden).

4) The summary may be exported in .csv format for inclusion in spreadsheets or other documents.

j. Equipment Summary

1) The user interface shall provide a summary that allows the user to compare all similar equipment that serves the space as well as downstream (child) spaces in order to evaluate conditions quickly and determine patterns for troubleshooting purposes.

2) Each unique equipment type shall be selectable and display a representative set of values along with the space(s) being served by the device. Equipment types can be selected from a dropdown menu in the summary.

3) Clicking or tapping on a selected device in the summary shall navigate to the home page for that piece of equipment while clicking or tapping a data point shall display the command panel for that point.

4) It shall be possible to export a .pdf copy of the currently displayed summary by clicking or tapping on the export icon.

5) It shall be possible to create a custom trend graph containing the data shown in the currently displayed summary by clicking on the trend icon in the header bar and selecting the specific points to trend in the resulting selection panel.

k. User Defined Summaries

1) Provide the capability to view, command, and modify large quantities of similar data in summaries without the use of a secondary application (e.g. a spreadsheet). These summaries shall be generated automatically or user

defined. User defined summaries shall allow up to seven user defined columns describing attributes to be displayed including custom column labels with up to 100 rows per summary.

l. Trend

1) The user interface shall provide the capability to view historical trend data from multiple pieces of equipment in both bar and line formats.

2) The user shall have the ability to navigate to a selection list of frequently viewed trends.

3) Trend graphs shall have to ability to be smartly auto-generated based on equipment and space relationships.

4) Each graph shall include a dedicated selection icon to export a copy of the graphic and data in .pdf format or the data only as a .csv file.

m. Operator Access

1) The user interface shall provide the ability to segment access to building data based on the space(s) or location(s) the user is physically located in and/or manages. The user interface shall provide the capability to assign “inherited” space permissions and the ability to assign user’s space based access in bulk.

2) The user interface shall provide the ability to segment access to building data based on the space(s) or location(s) the user is physically located in and/or manages. The user interface shall provide the capability to assign “inherited” space permissions and the ability to assign user’s space based access in bulk.

n. Graphics

1) The user interface shall display an equipment visualization or graphic within the context of its associated space (building, floor, room, etc.) or equipment dashboard.

2) Graphics shall include the ability to define individual information layers for operator selection in order to clarify systems status and simplify operation on mobile devices. Where desired a master layer may be defined to include important information about the facility on all graphic screens.

3) Graphics shall support the use of photo-realistic symbols as well as color change and animation to match the status of the related system control point.

4) It shall be possible to export a time stamped .pdf file of the graphic being viewed in order to communicate the current conditions in the space or the equipment being viewed and to provide a historic record.

5) An integral graphic manager shall be provided including the following features and capabilities:

a) Creation and modification of graphics from any HTML5 capable browser without the need for additional plug-ins or software packages.

b) Access to a full suite of pre-defined templates for air and water sourced HVAC applications as well as the ability to add custom templates as created for other use. Pre-aliased graphic templates may be defined and saved for repetitive representations of common mechanical and electrical equipment.

c) A full suite of pre-defined three dimensional symbols for mechanical and electrical systems as well as all line, text and shape tools required for integration into a graphic with zoom and pan capabilities on multiple platforms and in multiple browsers.

d) The ability to search and replace items in multiple graphics with a single command.

e) The ability to import and insert photos and images into the graphic.

f) The ability of the graphics manager to create and edit graphics including the ability to bind graphic elements to the values and conditions of system points in both an on-line and off-line mode.

6) As required, the BMS Contractor shall provide software licenses in the name of the owner for programming, configuration and graphics building tools to allow designated representatives to make changes, modifications or additions to the system. While future updates or revisions may require an update fee, the owner shall incur no additional cost if they choose not to update. Systems that require any annual or time-limited licensing fees shall not be permitted.

o. Scheduling

1) The user interface shall provide the capability to display, in a singular view, all of the effective schedules in the context of the space (building/floor/room, etc.) or equipment that the schedule effects. The software should have the ability to display an effective schedule, for the present, or a future date.

2) The user interface shall provide a report of all schedules affecting a space or equipment. The report shall provide the user details of events that comprise the weekly schedule and exception schedule(s). The report shall provide a means of viewing individual breakout scheduling elements for Weekly Schedule, Exceptions and Default Commands.

3) The user interface shall provide the capability to efficiently change or modify schedules in mass quantities. This includes the capability to add, in

bulk, exceptions to schedules, in addition to assigning, in bulk, weekly schedules.

p. Command and Control

1) It shall be possible to command system analog and binary points via a dropdown menu accessed by clicking or tapping on the value shown in any equipment summary or graphic display and completing the task in the resultant menu including an optional annotation.

2) Commanding multiple points shall be possible on displays where multiple like system elements can be chosen.

q. Search

1) Typing a text string in the Search box shall display a list of all occurrences of that string in the mobile user interface. When a string is represented in the description of a space or network element, selecting it shall display its default dashboard.

2) Clicking or tapping on the Advanced Search Icon shall display the Advanced Search dialog box permitting the following:

a) Search by Space and Equipment, Equipment Definition or Network Reference.

b) Filter the search by wildcard name or object type.

c) Multi-selection of objects for commanding or the creation of reports including Trend, Alarm, Audit and Activity for a specific period of time.

r. Offline Operation

1) The mobile user interface shall have the ability to operate in an offline mode in order to create or edit graphics and dashboard elements.

2) Content created offline shall be available to all authorized users for inclusion of an operating user interface later.

2.12 ENERGY SAVING PROGRAMS

A. Demand Limiting: Monitor total power consumption for each power meter and shed associated loads automatically to reduce power consumption to an operator set maximum demand level.

B. Duty Cycling: Periodically stop and start loads, based on space temperature, and according to various on/off patterns.

C. Automatic Time Scheduling: Self-contained programs for automatic start/stop/scheduling of building loads. Support up to seven (7) normal day schedules, seven (7) "special day" schedules and two (2) temporary schedules.

D. Optimal Start/Stop: Perform optimized start/stop as function of outside conditions, inside conditions, or both. Optimization shall be adaptive and self-tuning, adjusting to changing conditions by modifying occupancy period based upon the desired temperature at beginning and end of the occupancy period. Base optimization on occupancy schedules, outside air temperature, seasonal requirements, and interior room temperature. Employ adaptive model prediction for how long building takes to warm up or cool down under different conditions.

E. Night-Setback Program: Reduce heating space temperature setpoint or raise cooling space temperature setpoint during unoccupied hours in conjunction with scheduled start/stop and optimum start/stop programs.

F. Setpoint Reset: Setpoints for control of variable load systems shall be reset based on load demand, as described in the Sequence of Operations.

G. Calculated Points: Define calculations and totals computed from monitored points (analog/digital points), constants, or other calculated points.

H. Event Initiated Programming: Any data point capable of initiating event, causing series of controls in a sequence.

I. Holiday Scheduling.

J. Direct Digital Control: Furnish software so operator is capable of customizing control strategies and sequences of operation by defining appropriate control loop algorithms and choosing optimum loop parameters.

K. Trend logging shall be provided for all points per the input/output summary where there is a change in the analog or binary signal. Each controller shall be capable of storing trend values and then automatically transfer data to the NAC or the NS hard disk. Trend data shall be updated continuously per the operator assigned interval at intervals as low as one minute. Collect samples at intervals specified in minutes, hours, days, or month. Output trend logs as line-graphs or bar graphs. Binary points (input and output) shall only be logged upon a change of value (COV). Display trend samples on workstation in graphic format. Automatically scale trend graph with minimum 60 samples of data in plot of time versus data.

2.13 FIELD INSTRUMENTATION

A. Temperature Sensors: All temperature sensors shall be thermistor type, factory- calibrated to within 1 degree F, interchangeable with housing appropriate for application. Sensors shall have a temperature curve rated for the application. Sensor wiring terminations shall be in a galvanized box.

1. Outside air temperature sensors shall be installed in weather proof enclosure with ventilated sun-shied

2. Duct mounted temperature sensors shall be averaging type for supply air, mixed air and low temperature applications for air handling units. Duct probe temperature sensor shall be acceptable for terminal units.

3. Space temperature sensors shall contain a backlit LCD digital display and user function keys along with temperature sensor, setpoint adjustment and after-hours override use. Override time may be set in one-hour increments.

4. Provide flat plate stainless steel space temperature sensors with no local setpoint adjustment as indicated on the Drawings.

B. Carbon Dioxide Sensors: The sensor shall be capable of monitoring carbon dioxide concentration with an accuracy of +/- 50 parts per million (PPM). The sensor shall produce a linear 0-10 VDC or 4-20 mA signal over the range of 0 to 2000 PPM. The sensor shall measure using non-dispersed infrared (NDIR) technology to measure carbon dioxide gas and shall be;

1. The EMCS Contractor shall utilize the required calibration devices to properly commission and calibrate the sensors per the manufacturer’s requirements.

C. Relative Humidity Sensors: relative humidity sensors shall be a two-wire type, 4-20 mA output proportional to the relative humidity range of 0-100%. The accuracy of the sensors shall be +2% over a range of 10-90% RH.

1. Outdoor relative humidity sensors: provide non-corroding outdoor shield to minimize wind effects and solar heating. Install wall-mount weather proof enclosure with conduit fitting.

2. Wall-mounted relative humidity sensor: sensor shall be installed in a wall- mounted enclosure with white cover.

3. Duct-mounted relative humidity sensor: sensor shall be provided with a moisture resistant enclosure with conduit fitting. The probe length shall be 8” minimum.

D. Pressure Transducers:

1. Air pressure sensor: The pressure sensors shall have an input range compatible with the medium being measured. The proportional output signal shall be 0-10 VDC or 4-20 mA.

E. Freezestat: Provide freezestats for all chilled water air handling systems that receive more than 10% untreated outside air. Freezestats shall provide vapor tension elements, which shall serpentine the inlet face on all coils. Provide additional sensors, wired in series, to provide one linear foot per square foot of coil surface area. Freezestat shall be manually reset at the switch. Interlock to the associated fan so that fan will shut down when HOA switch is in hand or auto position. Provide time delay relays with a 0-10 minute time delay relay duration to minimize nuisance freezestat trips. Time delay relay shall be adjustable at the associated control panel.

F. Air differential pressure switch: For fan shutdown, provide air differential pressure switches for all fans controlled by a variable frequency drive (VFD) to shut down the associated fan in the event of sensing high differential pressure. Air differential pressure switches shall have an adjustable setpoint with a range of 0-10 inches W.G. with manual reset at the switch. Provide ¼ inch copper tubing with compression fittings to mount to the side of the duct.

G. Momentary control relays: Provide momentary control relays as indicated. . Relays shall have coil ratings of 120 VAC, 50 mA or 10-30 VAC/VDC, 40 mA as suitable for the application. Contact ratings shall be 10 amp. Provide complete isolation between the control circuit and the digital output. Relays shall be located in the UC or other local enclosures and have pin-type terminals. Relays shall have LED indication of status.

H. Current sensing relay: Current sensing relays shall be rated for the applicable load. The output relay shall have an accessible trip adjustment over its complete operating range. Enclosure shall have an LED to indicate relay status.

I. Photocell: Ambient light level shall by a photocell in a non-corroding in a weatherproof housing with sun shield suitable for exterior installation. The control signal output shall be 4-20 ma or binary contact closure as specified in the sequences of operation. Mount the photocell on the north side of the building on the roof. The sensor reading shall be 0- 750 foot-candles.

J. Occupancy Sensors

1. The dual-technology occupancy ceiling mounted sensor shall be capable of detecting presence in the control area by via Doppler shifts in transmitted ultrasound and passive infrared (PIR) heat changes. Sensor shall utilize Dual Sensing Verification Principle for coordination between ultrasonic and PIR technologies. Detection verification of both technologies must occur in order to activate lighting systems. Sensor shall have a retrigger feature in which detection by either technology shall retrigger the lighting system on within 5 seconds of being switched off. The sensor shall operate at 24 VDC/VAC.

2. Sensors shall have a time delay that is adjustable with configuration software or shall have a fixed time delay of 5 to 30 minutes, set by a DIP switch. Sensors shall feature a walk-through mode, where lights turn off 3 minutes after the area is initially occupied if no motion is detected after the first 30 seconds.

3. The sensor shall have an additional single-pole, double throw isolated relay with normally open, normally closed and common outputs. The isolated relay is for use with HVAC control, data logging, and other control options. The sensor shall have an LED indicator that remains active at all times in order to verify detection within the area to be controlled.

2.14 WHOLE BUILDING METERING

A. Buildings are to monitor electrical, water and gas usage. Any additional sub metering is to be provided by the Contractor and determined by each specific project as called out on the Drawings or Specifications.

2.15 AIRFLOW MEASURING STATIONS (AFMS)

A. Duct mounted airflow measuring stations with combination airflow and air temperature measurement devices shall have the following features:

1. Multi-point sensors in one or more probe assemblies with a maximum of one to sixteen sensor nodes per location, and a single remotely mounted microprocessor-based transmitter for each measurement location. Each sensor node shall consist of two hermetically sealed bead-in-glass thermistors. Each sensing point shall independently determine the airflow rate and temperature at each node, which shall be equally weighted in calculations by the transmitter prior to output as the cross-sectional average. Each

ducted sensor probe shall have an integral, U.L. Listed, plenum rated cable. Each independent temperature sensor shall have a calibrated accuracy of +/-0.14° F (0.08° C) over the entire operating temperature range of -20° F to 160° F (-28.9° C to 71° C).and be calibrated at 3 temperatures against standards that are traceable to NIST. Acceptable manufacturer shall be EBTRON, Inc. GTx116-PC.

2. Each transmitter shall have a display capable of simultaneously displaying both airflow and temperature. Airflow rate shall be field configurable to be displayed as velocity or volumetric rates, selectable as IP or SI units. Each transmitter shall operate on 24 VAC and be fused and protected from over voltage, over current and power surges.

3. Each independent airflow sensor shall have a laboratory accuracy of +/-2% of reading over the entire calibrated airflow range of 0 to 5,000 fpm (25.4 m/s), and be wind tunnel calibrated at 16 points against air velocity standards that are traceable to NIST.

2.16 DAMPER ACTUATORS

A. Outside and exhaust air damper actuators shall be mechanical spring return. The actuator mounting arrangement and spring return feature shall permit normally open or normally closed positions of the damper as required.

B. Outside and return air modulating actuators shall utilize analog (proportional) control 0-10 VDC. Actuators shall be driven in both the open and closed directions.

C. Electric damper actuators shall be direct shaft mounted and use a V-bolt and toothed V- clamp causing a cold weld effect for positive gripping. Single bolt or setscrew type fasteners are not acceptable.

D. Single section dampers shall have one electronic actuator direct shaft mounted.

E. Multi-section dampers with electric actuators shall be arranged so that each damper section operates individually. One electronic actuator shall be direct shaft mounted per damper section.

F. Damper actuators shall be BELIMO or equivalent.

2.17 PANELS AND ENCLOSURES

A. Provide panels and enclosures for all components of the EMCS, which are susceptible to physical or environmental damage.

B. Interior panels and enclosures shall meet be NEMA 1 rated painted steel panels with locking door.

C. Exterior mounted panels and enclosures shall be NEMA 4 painted steel panels with locking door.

D. Panels for USCs shall be mounted on the outside of all unit ventilators and fan coil units with three feet of wall clearance in front of them and no higher than 7 feet to the bottom of the panel.

2.18 LABELING AND WARNING NOTICES

A. Provide labeling for all control panels and enclosures.

B. Provide labeling of all control wires and input/output points at the controller and at the control device; the label at each end of the wire shall be the same Labels shall be machine generated, typed and clearly legible with a maximum of 17 characters. Handwritten labels or labels written on the control wire jacket will not be acceptable. Each label shall be unique to its function and shall reference the applicable system. For example:

1. "AHU-1 SAT" will indicate the supply air temperature sensor for AHU-1. Improper labeling shall be removed and shall require re-commissioning of the control device and controller to document correct functionality.

C. Provide high voltage warning notices at all equipment controlled by the EMCS and at all associated motor starters when used by equipment controller.

2.19 TUBING AND PIPING

A. Provide tubing and piping as required for the field instrumentation.

B. Tubing within equipment rooms, vertical risers, and penetrations to ductwork shall be either copper pipe or shall be plastic tubing within conduit. Tubing for all water-based instrumentation shall be copper pipe. Identify the type of tubing proposed in the shop drawing submittal.

C. Provide suitable bulk head fittings for duct and panel penetrations.

D. Tubing in plenum rated areas may be plastic tubing. Polyethylene tubing shall meet, at minimum, the following requirements: flame retardant; crack resistant; 300 psi burst pressure.

2.20 CONDUIT AND FITTINGS

A. Provide all conduits, raceways and fittings for the EMCS monitoring, communication and control cabling. All work shall meet all applicable codes.

B. Conduit, where required, shall meet, the requirements specified within Division 26.

C. EMCS monitoring and control cable shall not share conduit with cable carrying voltages in excess of 90 VAC.

D. Conduit and fittings must be rated for exterior/outdoor conditions.

2.21 CABLING

A. Provide all cables for the EMCS. Cable shall meet, at minimum, the following requirements:

1. Minimum 98% conductivity stranded copper.

2. Proper impedance for the application as recommended by the EMCS component manufacturer.

3. Monitoring and control cable shall be #18 AWG or larger, dependent on the application. Analog input and output cabling shall be shielded.

4. Management Level Network cable shall be CAT 6, 24 gauge unshielded.

5. Automation Level Network cable shall be #24 AWG shielded.

6. Shield shall be grounded at the CCP, UC, or control panel. Ground at one end only to avoid ground loops.

7. Identification of each end at the termination point. Identification should be indicated on and correspond to the record drawings.

B. 120 VAC power wiring shall be of #12 AWG solid conductor or larger as required.

PART 3 - EXECUTION

3.01 PRE-CONSTRUCTION

A. The EMCS supplier shall provide a pre-construction coordination meeting with the affected trades to ensure a cooperative efficient process of installation. The invited trades shall include the general Contractor, mechanical Contractor, electrical Contractor, test and balance Contractor, Owner’s representative, consulting engineer and others with a direct interest in the coordination of the affected systems. The EMCS Contractor shall provide an outline of the meeting agenda highlighting the construction schedule, coordination with mechanical and electrical trades. Provide a sign-in sheet and submit it through the attendees along with a summary of the meeting notes for future reference.

3.02 INSPECTION DURING INSTALLATION

A. Provide a technician to assist the Engineer or Owner’s Representative, Test and Balance and Commissioning Agent with inspections made during the installation period that are required to review the progress and quality of ongoing work. The Engineer/Owner’s representative shall generate field observation reports on the findings of the inspection. The engineer or Owner’s representative shall advise the EMCS Contractor during the inspection of any concerns noted with respect to the installation and shall repeat the concerns in writing as soon as possible after the inspection is completed. The EMCS Contractor shall take corrective action to meet the requirements of the Specifications. Upon correction, the EMCS Contractor shall submit written documentation through the contractors to the engineer.

3.03 INSTALLATION OF COMPONENTS

A. Provide all interlock and control wiring. All wiring shall be installed in a neat and professional manner in accordance with Specification Division 26 and all national, state and local electrical codes.

B. Provide wire and wiring techniques recommended by equipment manufacturers. Control wiring shall not be installed in power circuit raceways. Magnetic starters and disconnect switches shall not be used as junction boxes. Provide auxiliary junction boxes as required. Coordinate location and arrangement of all control equipment with the Owner's Representative prior to rough-in. Provide auxiliary pilot duty relays on motor starters as required for control function.

C. Electrical Contractor shall provide 120 or 277 volt power at a junction box within 48” of the controller. The EMCS Contractor shall coordinate with the Electrical Contractor to identify locations of power requirements prior to the installation of the controls.

D. Conduit for control wiring shall be provided whenever one of the following conditions exists:

1. Conduit is indicated on the Drawings or specifically required by the Specifications.

2. Cabling runs through inaccessible areas such as within partitions/walls, above closed in ceilings, under floor; within trenches and underground; on the exterior of the building; exposed on the surface of the building; when encased in concrete or other material that makes the cable inaccessible or when located such that access to the cable is not readily obtained.

3. Cable within mechanical, telecommunications and electrical equipment rooms and control rooms.

4. Conduit shall be installed, inside wall from sensor box to above the wall, for all wall mounted temperature, humidity and CO_2 sensors.

E. Control wiring located above an accessible ceiling space may be plenum-rated cable. Plenum rated wire shall be bundled and routed at right angles to the building lines and secured to the building structure every 15 feet.

F. When communication bus enters or exits a building, a surge suppressor shall be installed. The surge suppressor shall be installed according to the controls manufacturer’s instructions.

G. Provide sleeves for all cable and conduit passing through walls, partitions, structural components, floors and roof

H. All sensor wiring shall be labeled to indicate the origination (at the device) and destination of data (at the control panel). The description shall indicate the type and location of the control device such as “AHU-1 SA temp” or “VAV 1-1 space temp”.

I. Wall temp sensors at 48" above the finished floor to comply with ADA requirements and to match the height of the light switches. Mount humidity sensor at equal height to wall temperature sensor.

3.04 VERIFICATION REQUIREMENTS

A. Verification shall be provided by the EMCS Contractor to demonstrate and confirm that the installed system complies with the Specifications and the control sequences of operation herein specified. Upon completion of the verification process the EMCS Contractor shall demonstrate to the Engineer or Owner’s representative and Commissioning Agent the functionality of the control system devices are in compliance with the Contract Documents.

1. The installing contractor shall perform a complete Performance Validation (PV) of the Building management system three (3) times throughout the project:

a. At project turnover to customer.

b. At six (6) months of project operation.

c. At twelve (12) months of project operation or end of warranty.

2. Performance Verification shall include a complete and current Building Automation System site inventory including the following information at a minimum: a listing of all field and supervisory controllers with the following key attribute data; corresponding model numbers, firmware versions, available security updates, CPU and memory performance data, battery conditions, integrations, controlled equipment, and device and point counts.

3. Performance Verification shall include a complete written evaluation of system configuration and performance in the following categories:

a. Security – The Security evaluation shall include information about controllers that require security updates and conformance of user accounts to latest security rules and best practices.

b. Energy Performance – The Energy Performance and Savings evaluation shall identify opportunities through schedule and nightly setbacks, economizers, eliminating simultaneous heating and cooling and adding VSD to equipment.

c. Comfort and Health – The Comfort and Health evaluation shall identify temperature, pressure, and carbon dioxide values that deviate from desired set points that could lead to occupant discomfort.

d. Reliability – The Reliability evaluation shall identify overridden control points, control points creating excessive alarms, and opportunities to adding control points and trends to further enable system functionality.

e. Standards – The Standards evaluation shall identify conformance to published standards for point count, network performance and protocol standards.

B. Technicians provided by the EMCS Contractor shall be factory trained and qualified in the operation of the provided control system. The EMCS Contractor shall provide, if requested, the factory training certificates of the individuals providing the verification services on this project.

C. Verification tools, applicable to the system provided, shall be utilized by the factory- trained technicians for proper verification of system operation and functionality. Temperature verification sensors shall be NIST certified within the last 12 months. Meters such as Fluke 52 series or better shall be utilized. Use of non-certified meters may require the system to be re-verified with certified meters at no cost to the Owner.

D. Documentation of the verification process shall be provided per the project general conditions in electronic PDF format as required. Documentation shall include the following forms:

1. Project System Verification Forms for each controller provided on the project to verify the proper function of each controller, control device and system component provided.

2. Panel Verification Forms for each control panel to document the proper installation and function of each control panel provided.

3. Sequence of Operation Verification Forms for each piece of controlled equipment to confirm compliance of the control system with the specified sequences of operation.

4. Not providing proper documentation for each control devices, panel, or system, upon request by the engineer or Owner's representative, may require the EMCS Contractor to re-verify the applicable systems at no additional cost to the Owner.

E. After completion of the verification, the EMCS Contractor shall be able to demonstrate the sequence of operations for each system to the engineer and the Owner's representative.

F. Equipment checkout sheets are to be produced by this Contractor showing checkboxes and compliance with the following procedures for each piece of equipment and turned over to the Owner and/or Mechanical Engineer.

3.05 COLOR GRAPHICS

A. The color graphics shall be provided for the EMCS system prior to system acceptance and Owner training. Owner has final approval and decision on all graphic templates.

B. The color graphics provided shall include the following as a template. Provide forward and backward links on the graphic.

1. Site plan with link to overall building plan including detached buildings. The site plan shall be referenced to an automatically updated aerial view or map view of the area such as Google Maps or Bing Maps. Provide link to proceed to the overall building floor plan.

2. The overall building plan shall indicate space temperature conditions referenced by the color of the zone. Specific details of the zone temperatures and equipment are not required. Provide a link to the floor plan wings, upper floors and remote buildings.

3. The floor plan color graphics shall indicate the space temperatures by color references. Additional information shall indicate the space temperature, the occupancy of the zone, air handling units, VAV terminals and ductwork with diffusers. A link at each terminal unit or AHU shall automatically connect the system operator to the equipment color graphic.

4. The color graphics for the equipment shall as a minimum be equal to the points from the input/output summary or control schematic. Primary control devices as required by the sequences of operation shall also be provided.

5. Control points from equipment that are integrated into the EMCS via BACnet shall be provided to convey the operating conditions of the attached equipment. Coordination of the integration points shall be accomplished during the submittal phase. The EMCS Contractor shall provide a list of all integrated points on their submittal.

3.06 CONTROL SYSTEM DEMONSTRATION AND ACCEPTANCE

A. Startup testing documentation: Prepare the checklist documenting startup testing of each input and output device, with technician's initials and date certifying each device has been tested and calibrated prior to acceptance testing. This document shall indicate proof that the following functions have been commissioned and shall be included in the as-built documentation: short to ground check, configuration of trends, confirmation that color- graphics are accurately representing actual systems, point to point checkout, all damper and valve actuators respond to input change, control modules are addressed and have functional descriptors, specified interlocks are functional, calibration report of all sensors, discrete outputs respond to time schedule or manual enable command.

B. Demonstration. Prior to acceptance, demonstrate the following performance tests to demonstrate system operation and compliance with the Specifications.

1. Engineer, Owner’s representative and mechanical Contractor shall be invited to observe and review system demonstration. Provide attendees at least 10 day’s notice.

2. Demonstration shall follow process approved as part of the submittal and shall include complete checklists and forms for each system as part of system demonstration.

3. Demonstrate actual field operation of each sequence of operation as specified. Demonstrate calibration and response of any input and output points requested by engineer or Owner’s representative.

4. Demonstrate complete operation of operator interface including review of color-graphics, time schedules, trend logs, alarm notification, functionality of tablet PC operation.

a. PID loop response. Supply graphical trend data output showing each PID loop's response to a set point change representing an actuator position change of at least 25% of full range. Trend sampling rate shall be selectable from 10 seconds to 3 minutes, depending on loop speed. Each sample's trend data shall show set point, actuator position, and controlled variable values.

b. Demand limiting. Supply trend data output showing demand-limiting algorithm action. Trend data shall document action sampled each minute over at least a 30-minute period and shall show building kW, demand limiting setpoint, and status of set points and other affected equipment parameters.

c. Trend logs for each system. Trend data shall indicate set points, operating points, valve positions, and other data as specified. Logs shall be accessible through system's operator interface and shall be retrievable for use in other software programs.

5. Alarms and Interlocks. Check each alarm with an appropriate signal at a value that will trip the alarm. Trip interlocks using field contacts to check logic and to ensure that actuators fail in the proper direction. Alarm verification shall include temperatures exceeding alarm threshold (high and low), fan failure safety, duct high static pressure switch, freezestat, and smoke detector shutdown.

6. Tests that fail to demonstrate proper system operation to the engineer shall be repeated after Contractor makes necessary repairs or revisions to hardware or software to successfully complete each test.

C. Owner Acceptance.

1. After tests described in this Specification are performed to the satisfaction of both Engineer and Owner’s representative and Commissioning Agent, the Engineer shall accept the control system as meeting completion requirements. Engineer may exempt tests from completion requirements that cannot be performed due to circumstances beyond EMCS Contractor's control. Engineer shall provide written statement of each exempted test. Exempted tests shall be performed as part of warranty.

2. System shall not be accepted until completed demonstration forms and checklists are submitted and approved by the Engineer, Owner and Commissioning Agent (CxA).

3. No portion of the total Contract will be declared substantially complete until the automatic temperature control system has been demonstrated to be complete and functioning as intended. The temperature control system will be complete and functioning as intended when all of the space temperatures are maintained at plus or minus two (2) degrees F of setpoint.

3.07 DEMONSTRATION AND OWNER TRAINING

A. Provide a training session for the Owner’s operations personnel. Training session shall be performed by a qualified person who is knowledgeable in the subject system/equipment. Submit a training agenda two (2) weeks prior to the proposed training session for review and approval. Training session shall include at the minimum:

1. Purpose of equipment.

2. Principle of how the equipment works.

3. Important parts and assemblies.

4. How the equipment achieves its purpose and necessary operating conditions

5. Most likely failure modes, causes and corrections.

6. On site demonstration that includes hands-on demonstration of the manipulation of setpoints, schedules and other adjustable elements of the system.

7. The demonstration shall be on the actual, completed graphic interface pages for the specific project.

B. Provide a second training session six (6) months after initial session for any follow-up or additional training requested by Owner’s personnel. Allow three (3) hours for the second training session.

C. EMCS Contractor shall provide ongoing free classroom training at their local office.

PART 4 - I/O POINTS

4.01 GENERAL

A. The sequences of operations indicated on the Control Drawings shall be accomplished by the EMCS. Coordinate with Owner in operating equipment to maximize comfort and economy. All points required to accomplish the sequences shall be provided and connected to the EMCS.

B. Equipment interfaces are acceptable for providing information but each piece of equipment (including but not limited to chillers, VFD's, unitary equipment, etc.) shall have a hardwired point for start/stop and speed control.

C. All Points added by Engineer and/or Control Contractor needed for the sequences shall be identified in the Submittals and Project Record Documents.

D. All VFD's and actuators shall have feedback that reports to the EMCS.

E. All units to have economizer sequences and economizer fault detection and diagnosis capabilities.

F. Flow meters at air handlers shall be integrated into the EMCS.

A. Interlock of fire suppression in IT spaces is required and shall be fully coordinated by the EMCS and Fire Suppression Contractors. BACnet interface to be provided by Fire Suppression Contractor for items installed by that contractor.

4.02 BUILDING METERING

A. I/O Points Lis

1. Electrical Switchgear – Modbus Integration

2. Domestic Water Meter – AI (Domestic Flow Meter by Plumbing Contractor)

B. Natural Gas Meter – AI (Natural Gas Meter by Plumbing Contractor)

4.03 BUILDING SHUTDOWN (SHELTER IN PLACE)

A. I/O Points List

1. Shutdown switch status – dry contact - DI

B. A maintained mushroom type emergency local override button shall be installed in the principal's office or the administration area shall shut down the HVAC system in case of emergency. Once pushed the button must be reset to allow the HVAC system to resume normal operation. The final location of the building shutdown is to be determined by Fort Bend County personnel.

4.04 IRRIGATION CONTROL

A. I/O Points List

1. Monitor and display current flow showing gallons per minute - AI
2. Monitor total gallons used (trend) - AI

B. EMCS system will interface with irrigation controller to allow owner to control scheduling and zoning of irrigation.

4.05 DOMESTIC WATER HEATING CIRCULATION PUMP

A. I/O Points List

1. Start/stop – DO
2. Return water temperature – AI
3. Status

4.06 VARIABLE AIR VOLUME BOX WITH SUPPLEMENTAL HEAT

A. I/O POINTS

1. Space temperature sensor – AI
2. Electric heating coil - AO
3. Cooling damper - AO
4. Fan status – DI
5. Fan speed (hi/lo) - DO
6. Discharge air temperature –AI
7. Space occupancy sensor – DI

4.07 EXHAUST FANS

A. I/O POINTS LIST

1. Fan start/stop – DO
2. Fan status – DI

4.08 OUTDOOR AIR CONDITIONS

A. I/O POINTS LIST

1. Outdoor air temperature – AI
2. Outdoor air humidity – AI

B. The sensors shall be mounted in an area on the North side of the building where the representative temperature and humidity can be monitored, both shall have sun shields. Based on the outside air temperature and humidity the B.A.S. shall calculate the outdoor enthalpy, wet bulb, and dew point temperatures. The outdoor air temperature and humidity shall be broadcast as global information for use by the other control programs.

4.09 IDF AND MDF ROOMS

A. I/O POINTS LIST

1. Space temperature – AI

B. The EMCS shall monitor the space temperature in the IDF and MDF rooms.

C. The EMCS shall report a high temperature alarm to the computers, pagers, and/or text message compatible cell phones designated by the School district personnel if the space temperature rises above 68°F (adjustable) for five (5) minutes (adjustable).

4.10 UNIT HEATER

A. I/O POINTS LIST

1. Space temperature - AI

2. UH start/stop and hot water valve open/close - DO

B. A space temperature sensor shall monitor the air temperature in the space. If the space temperature falls below 60 degrees F (operator adjustable) the Unit Heater fan shall be energized and the hot water valve shall be opened. The fan shall continue to run with the hot water valve open until the space temperature rises by 4 degrees F (operator adjustable).

4.11 DX/ GAS RTU WITH HOT GAS REHEAT AND CO_2

A. I/O POINTS LIST

1. Space temperature – AI

2. Discharge air temperature – AI

3. Return air temperature - AI

4. RTU fan status – current switch - DI

5. DX Cooling – Multiple stages as necessary- DO

6. Heating – multiple stages as necessary - DO

7. RTU fan start/stop - DO

8. Exhaust fan start/stop - DO

9. Outdoor air damper – AO

10. Return Air CO_2 – AI

END OF SECTION 23 09 23

23 21 13

HYDRONIC PIPING

PART 1 - GENERAL

1.1 SECTION INCLUDES

A. Furnish and install hydronic piping systems; including:

1. Pipe and pipe fittings.
2. Chilled water piping system.
3. Hot water piping system.
4. Condenser water piping system.

1.02 RELATED SECTIONS

A. Division 09 – Painting

B. Section 23 05 00 – Common Work Results for HVAC.

C. Section 23 05 19 – Meters and Gages for HVAC Piping.

D. Section 23 05 23 – General Duty Valves for HVAC Piping & Equipment.

E. Section 23 05 39 – Sleeves, Flashings, Supports and Anchors.

F. Section 23 05 53 – Identification of HVAC Piping and Equipment

G. Section 23 05 93 - Testing, Adjusting, and Balancing of HVAC.

H. Section 23 07 00 – HVAC Insulation.

I. Section 23 09 23 – Direct Digital Controls for HVAC

J. Division 23 – Mechanical Equipment Sections as Applicable

1.03 REFERENCES

A. ASME B16.3 - Malleable Iron Threaded Fittings Class 150 and 300.

B. ASME B16.23 - Cast Copper Alloy Solder Joint Drainage Fittings - DWV.

C. ASME B16.29 - Wrought Copper and Wrought Copper Alloy Solder Joint Drainage Fittings - DWV.

D. ASME B31.1 – Power Piping.

E. AWS D1.1 - Structural Welding Code.

F. ASTM A53 - Pipe, Steel, Black and Hot-Dipped Zinc Coated, Welded and Seamless.

G. ASTM A234 - Pipe Fittings and Wrought Carbon Steel and Alloy Steel for Moderate and Elevated Temperatures.

H. ASTM B32 - Solder Metal.

I. ASTM B88 - Seamless Copper Water Tube.

J. ANSI B16.9, factory-made wrought steel butt welding fittings.

K. National Association of Corrosion Engineers (NACE) Publication RP-01-69, Recommended Practice - Control of Corrosion on Underground or Submerged Metallic Piping Systems.

1.04 SUBMITTALS

A. Include data on pipe materials, pipe fittings and accessories.

B. Welding documents including WPS, WPQ, and PQR.

C. Include detailed shop drawings clearly indicating valve make, model, location, type, size and pressure rating.

D. Include component sizes, rough-in requirements, service sizes, and finishes. Include product description and model.

E. Provide operation and maintenance manual.

1.05 QUALITY ASSURANCE

A. Welding Materials and Procedures: Conform to ASME Section IX.

B. Conform to ASME B31.1 for Central Plant and Utility Distribution Piping.

C. Conform to ASME B31.9 for Building Piping.

D. For each product specified, provide components by same manufacturer throughout.

E. Designate and provide visual welding examination per ASME Section IX requirements. <u>Provide only full penetration welds with complete fusion.</u>

PART 2 - PRODUCTS

2.01 HOT & CHILLED WATER PIPING

A. Pipe 2 Inches and Smaller: Black steel, ASTM A53 or A106, Schedule 40, Grade B, seamless or Type K Copper with pressed or ASTM solder joint wrought copper fittings.

1. Fittings: ASME B16.3 threaded malleable iron Class 150

2. Unions: ASME B16.39 threaded malleable iron Class 150

3. Flanges: ASME B16.5 threaded companion type

B. Pipe 2-1/2 Inches and larger: Black steel, ASTM A53 or A106, standard wall, Grade B, Seamless or ERW as required with beveled ends.

1. Fittings: ASME B16.9 wrought steel standard wall butt-weld fittings

2. Flanges: ASME B16.5 Class 150 weld neck, raised face unless required for flat faced equipment connection.

C. EQUIPMENT CONNECTIONS

1. Grooved mechanical couplings may be used for *equipment connections* only.

D. FLANGE GASKETS

1. Non-asbestos compressed material gasket in accordance with ANSI B-16.21; 1/16-inch or 1-8-inch thick, full face or self-centering flat ring type. Provide gaskets containing aramid fibers bonded with styrene butadiene rubber (SBR) or nitrile butadiene rubber (NBR) suitable for a maximum 600 degrees F service. Gaskets must be compatible with flowing fluid and temperature and pressure of system.

2.02 EQUIPMENT DRAINS AND OVERFLOWS, PRIMARY AND AUXILIARY CONDENSATE DRAIN PIPING

A. Pipe 4" and larger: Galvanized steel ASTM A53 or A106, Schedule 40.

1. Fittings: Galvanized cast iron, or ASME B16.3 malleable iron.

2. Joints: Screwed.

B. Tubing 3" and smaller: Copper ASTM B88, Type L, hard drawn.

1. Fittings: ASME B16.23 cast brass, or ASME B16.29 solder wrought copper.

2. Joints: ASTM B32, solder, Grade 95TA.

2.03 CHILLED WATER PIPING – EXTERIOR AND UNDERGROUND

A. Underground chilled water and hot water piping shall be standard weight pre-insulated black steel as specified in paragraph 2.1 and shall be fabricated and factory insulated with Polyurethane foam for chilled water systems.

B. All piping shall be clean when it is installed. Before installation it shall be checked, upended, swabbed, if necessary, and all rust or dirt from storage or from lying on the ground shall be removed. The Contractor is cautioned to exercise rigid control of the interior cleanliness of the pipe as it will be impossible to flush clean after assembly.

C. Piping shall be temporarily supported on blocks in the excavation to an adequate height to make all welds. Blocks shall be removed after insulation is applied and supported on shields resting on permanent blocks of an inert material such as concrete construction blocks. Temporary blocks shall have a dimensional height greater than the permanent blocks equal to the thickness of the insulation plus saddle.

D. and supported on shields resting on permanent blocks of an inert material such as concrete construction blocks. Temporary blocks shall have a dimensional height greater than the permanent blocks equal to the thickness of the insulation plus saddle.

E. All steel piping shall have ends cut square and beveled for butt-welding. Straight sections of factory-insulated pipe shall have 6" of exposed pipe at each end for field joint fabrication.

F. Polyurethane foam insulation shall be injected with one shot into the annular space between carrier pipe and jacket with a minimum thickness of two (2) inch. Insulation shall be rigid, 90-95% closed cell polyurethane with a 2 to 3 pounds per cubic foot density and coefficient of thermal conductivity (K-Factor) of 0.14 and shall conform to ASTM C-591. Maximum operating temperature shall not exceed 250 degrees F. Insulation thickness shall be specified by calling out appropriate carrier pipe and jacket size combinations.

G. e combinations.

H. Jacketing material shall be extruded white polyvinyl chloride, consisting of clean, virgin NSF approved Class 12454-B PVC compound, conforming to ASTM D-1784, Type 1, Grade 1. PVC jacket shall have a wall thickness in mils equal to ten times the nominal jacket diameter and shall not be less than 60-mils. High density polyethylene (HDPE), conforming to ASTM D-1248, shall be used for jacketing larger than 20”. Wall thickness for HDPE jacketing shall be 90-mils for sizes 8″ and smaller, 100-mils for 10″-12″, 150-mils for 14″-22″, and 225-mils for 24″ and larger. Jacketing for above ground, outdoors. Installations shall contain ultraviolet inhibitors for protection from sunlight. No FRP jacket allowed.

I. Straight run joints are insulated using urethane foam to the thickness specified, jacketed with PVC sleeves and sealed with polyethylene backed, pressure sensitive bituminous rubber tape, 30-mils thick. Above ground installations shall use white, pressure sensitive PVC tape.

J. Where pre-insulated piping is exposed above grade, provide stainless steel jacketing for mechanical and UV protection. Reference Section 230713 for stainless jacketing requirements.

PART 3 - EXECUTION

3.01 PREPARATION

A. Ream pipe and tube ends. Remove burrs. Bevel plain end ferrous pipe.

B. Remove scale and dirt on inside and outside before assembly.

C. Prepare piping connections to equipment with flanges or unions.

D. After completion, fill, clean, and treat systems.

3.02 INSTALLATION

A. Route piping in orderly manner, plumb and parallel to building structure, and maintain gradient.

B. Install piping to conserve building space, and not interfere with use of space and other work.

C. Group piping whenever practical at common elevations.

D. Install piping with pipe rollers, guides, anchors, and expansion loops as required to allow for expansion and contraction without stressing pipe, joints, or connected equipment.

E. Provide clearance for installation of insulation, and access to valves and fittings.

F. Provide access where valves and fittings are not exposed.

G. Slope piping and arrange systems to drain at low points. Use eccentric reducers to maintain top of pipe level.

H. Where pipe support members are welded to structural building framing, scrape, brush clean, and apply one coat of zinc rich primer to welding.

I. Prepare pipe, fittings, supports, and accessories for primer coat painting prior to insulation. Prepare pipe, fittings, supports, and accessories for primer coat, undercoat, and finish coat painting for all uninsulated piping.

J. Use grooved mechanical couplings and fasteners only in equipment rooms.

K. Install unions downstream of valves and at equipment or apparatus connections.

L. Install brass male adapters each side of valves in copper piped system. Sweat solder adapters to pipe.

M. Install ball or butterfly valves for shut-off and to isolate equipment, part of systems, or vertical risers and as shown on the drawings.

N. Install ball or plug valves where indicated for throttling, bypass, or manual flow control services.

O. Provide spring loaded check valves on discharge of chilled water and condenser water pumps.

P. Use plug valves for throttling or balancing service, unless indicated otherwise.

Q. Provide 3/4-inch ball drain valves at main shut-off valves, low points of piping, bases of vertical risers, and at equipment. Pipe to nearest drain.

R. Underground Piping

1. Install pre-insulated underground pipe in total compliance with the manufacturer’s recommendations. Provide pipe casing and sleeves at slab-on-grade penetrations. Provide concrete thrust blocks where piping turns up to exit above grade.

2. Underground systems shall be buried in a trench not less than two (2) feet deeper than the top of the pipe and not less than twelve inches wider than the combined O.D. of all piping systems. Bed piping according to manufacturer's recommendations in pea gravel. Backfill compacted stabilized bank sand to a minimum thickness of 24 inches over the top of the jacket to meet H-20 highway loading.

3. pacted stabilized bank sand to a minimum thickness of 24 inches over the top of the jacket to meet H-20 highway loading.

4. All piping shall be pressure tested for 150 psi for 48 hours prior to cover-up.

5. A representative of the manufacturer shall be present during critical periods of installation and testing, to verify that the installation is being made in accordance with the manufacturer's recommendations.

6. Install specialties in accordance with manufacturer's instructions to permit intended performance.

S. Provide manual air vents at system high points readily accessible.

T. Provide automatic air vents in ceiling spaces or other high or concealed locations, provide vent tubing to nearest drain.

U. Provide valved drain and hose connection on strainer blow down connection.

V. Provide a relief valve on discharge side of pumps.

W. Select system relief valve capacity so that it is greater than system operating pressure.

X. Pipe relief valve outlet to nearest floor drain.

Y. Where one line vents several relief valves, make cross sectional area equal to sum of individual vent areas.

Z. Provide pump suction fitting on suction side of base mounted centrifugal pumps where indicated. Remove temporary strainers after cleaning systems.

AA. Support pump fittings with floor mounted pipe and flange supports.

BB. Provide flow metering stations where indicated. Instruct the Owner's personnel in the proper use of the flow metering equipment.

CC. Provide thermometer and pressure gauges for all equipment as indicated.

DD. Insulate piping as required by Section 23 07 13 "HVAC Insulation".

EE. Pipe make-up line with pressure reducing and pressure relief valves to air separator fitting. Provide quick-fill/bypass line as shown on the drawings.

FF. Pipe chilled and heating hot water system air separator fittings. Install automatic air vent on air separator and pipe outlet to floor drain.

GG. Provide flat faced flanges at flat faced flanged equipment connections. Do not mate raised flanges to flat faced castings.

3.03 CLEANING OF HYDRONIC PIPING SYSTEMS:

A. General cleaning of piping systems. Purge pipe of construction debris and contamination before placing the systems in service. Provide and install temporary connections as required to clean, purge and circulate. Flush the chilled and hot water systems utilizing the filter feeders.

B. Install temporary strainers at the inlet of pumps and other equipment as necessary where permanent strainers are not indicated. Keep strainers in service until the equipment has been tested, then remove either entire strainer or straining element only. Fit strainers with a line size blow down ball valve and pipe to nearest drain. Blow down strainers, remove and clean as frequently as necessary.

C. or straining element only. Fit strainers with a line size blow down ball valve and pipe to nearest drain. Blow down strainers, remove and clean as frequently as necessary.

D. Phase One: Initial flushing of system. Remove loose dirt, mill scale, weld heads, rust and other deleterious substances without damage to system components. Open valves, drains, vents and strainers at all system levels during flushing procedures. Flush until “potable water clear” and particles larger than 5 microns are removed.

E. Connect dead-end supply and return headers, even if not shown on the drawings, and provide terminal drains in bottom of pipe end caps or blind flanges.

F. Dispose of water in approved manner.

G. Phase Two: Cleaning of Piping Systems. Remove, without chemical or mechanical damage to any system component, adherent dirt (organic soil), oil, grease, (hydrocarbons), welding and soldering flux, mill varnish, piping components, rust (iron oxide) and other deleterious substances not removed by initial flushing. Chemical shall be approved by district water treatment provide prepping compound. Insert anti-foam compound as necessary. Circulate for 48 hours or as recommended by the manufacture. Dispose of water in approved manner. Flush system and replace with clean water. Verify compatibility of chemicals used with existing chemical treatment program on remodel projects.

H. f water in approved manner. Flush system and replace with clean water. Verify compatibility of chemicals used with existing chemical treatment program on remodel projects.

I. Phase Three: Final flushing and rinsing until “potable water clear” and particles larger than 5 microns are removed. Operate valves to dislodge and debris in valve body. Dispose of water in approved manner. Submit status report upon completion of each phase of work on each system.

J. Special requirements, if any, are specified in the sections on each type of piping or in the section on Water Treatment Systems.

K. Owner’s representative or commissioning agent to be present to observe cleaning of piping systems at each phase.

3.04 HYDRONIC SYSTEM TESTING

A. Pressure test all chilled water and heating hot water piping prior to insulating. Test in place with pressures as prescribed for pressure classification of system. Maintain pressure without pumping for two (2) hours.

B. Coordinate pipe cleaning, flushing, and chemical water treatment activities with pressure testing to avoid wetting pipe surfaces prematurely. Do not leave wetted piping untreated.

C. After chilled water, condenser water and heating hot water piping have been pressure tested and approved for tightness, thoroughly clean and flush piping.

END OF SECTION 23 21 13

23 21 16

HYDRONIC PIPING SPECIALTIES

PART 1 - GENERAL

1.01 RELATED DOCUMENTS

A. Drawings and general provisions of the Contract, including General and Supplementary Conditions and Division 01 Specification Sections, apply to this Section.

1.02 SUMMARY

A. Section Includes:

1. Hydronic specialty valves.
2. Air-control devices.
3. Strainers.
4. Connectors.

B. Related Requirements:

1. Section 230516 "Expansion Fittings and Loops for HVAC Piping" for expansion fittings and loops.
2. Section 230523.11 "Globe Valves for HVAC Piping" for specification and installation requirements for globe valves common to most piping systems.
3. Section 230523.12 "Ball Valves for HVAC Piping" for specification and installation requirements for ball valves common to most piping systems.
4. Section 230523.13 "Butterfly Valves for HVAC Piping" for specification and installation requirements for butterfly valves common to most piping systems.
5. Section 230523.14 "Check Valves for HVAC Piping" for specification and installation requirements for check valves common to most piping systems.

1.03 ACTION SUBMITTALS

A. Product Data: For each type of product:

1. Include construction details and material descriptions for hydronic piping specialties.
2. Include rated capacities, operating characteristics, and furnished specialties and accessories.

3. Include flow and pressure drop curves based on manufacturer's testing for calibrated-orifice balancing valves and automatic flow-control valves.

1.04 CLOSEOUT SUBMITTALS

A. Operation and Maintenance Data: For hydronic piping specialties to include in emergency, operation, and maintenance manuals.

1.05 MAINTENANCE MATERIAL SUBMITTALS

A. Differential Pressure Meter: For each type of balancing valve and automatic flow control valve, include flowmeter, probes, hoses, flow charts, and carrying case.

1.06 QUALITY ASSURANCE

A. Pipe Welding: Qualify procedures and operators according to ASME Boiler and Pressure Vessel Code: Section IX.

B. Safety Valves and Pressure Vessels: Shall bear the appropriate ASME label. Fabricate and stamp air separators and expansion tanks to comply with ASME Boiler and Pressure Vessel Code: Section VIII, Division 1.

PART 2 - PRODUCTS

2.01 HYDRONIC SPECIALTY VALVES

A. Plastic Ball Valves:

1. Manufacturers: Subject to compliance with requirements, provide products by one of the following:

a. American Valve, Inc.

b. Asahi/America.

c. Charlotte Pipe and Foundry Company.

d. Colonial Engineering, Inc.

e. GF Piping Systems: Georg Fischer LLC.

f. Hayward Flow Control.

g. IPEX USA LLC.

h. Jomar Valve.

i. KBI (King Bros. Industries).

j. Legend Valve & Fitting, Inc.

k. NIBCO INC.

l. Plast-O-Matic Valves, Inc.

m. SMC The Specialty Mfg. Co.

n. Thermoplastic Valves, Inc.

o. WATTS.

2. Body: One-, two-, or three-piece CPVC or PVC to match piping.

3. Ball: Full-port CPVC or PVC to match piping.

4. Seats: PTFE.

5. Seals: EPDM.

6. End Connections: Socket, union, or flanged.

7. Handle Style: Tee shape.

8. CWP Rating: Equal to piping service.

9. Maximum Operating Temperature: Equal to piping service.

10. Comply with MSS SP-122.

B. Plastic Butterfly Valves:

1. Manufacturers: Subject to compliance with requirements, provide products by one of the following:

a. American Valve, Inc.

b. Asahi/America.

c. Colonial Engineering, Inc.

d. GF Piping Systems: Georg Fischer LLC.

e. Hayward Flow Control.

f. IPEX USA LLC.

g. Legend Valve & Fitting, Inc.

h. NIBCO INC.

i. Plast-O-Matic Valves, Inc.

j. SMC The Specialty Mfg. Co.

k. Thermoplastic Valves, Inc.

l. WATTS.

2. Body: PVC or CPVC to match piping wafer type for installation between flanges.

3. Disc: EPDM-coated steel.

4. Seats: PTFE.

5. Handle Style: Locking lever.

6. CWP Rating: Equal to piping service.

7. Maximum Operating Temperature: Equal to piping service.

C. Plastic Check Valves:

1. Manufacturers: Subject to compliance with requirements, provide products by one of the following:

a. American Valve, Inc.

b. Asahi/America.

c. Colonial Engineering, Inc.

d. GF Piping Systems: Georg Fischer LLC.

e. Hayward Flow Control.

f. IPEX USA LLC.

g. KBI (King Bros. Industries).

h. Legend Valve & Fitting, Inc.

i. NIBCO INC.

j. Plast-O-Matic Valves, Inc.

k. SMC The Specialty Mfg. Co.

l. Thermoplastic Valves, Inc.

m. WATTS.

2. Body: Bronze, ball or plug type with calibrated orifice or venturi.

3. Ball: Brass or stainless steel.

4. Plug: Resin.

5. Seat: PTFE.

6. End Connections: Threaded or socket.

7. Pressure Gage Connections: Integral seals for portable differential pressure meter.

8. Handle Style: Lever, with memory stop to retain set position.

9. CWP Rating: Minimum 125 psig.

10. Maximum Operating Temperature: 250 deg F.

D. Bronze, Calibrated-Orifice, Balancing Valves:

1. Manufacturers: Subject to compliance with requirements, provide products by one of the following:

a. Armstrong Pumps, Inc.

b. Bell & Gossett; a Xylem brand.

c. Flow Design, Inc.

d. Gerand Engineering Co.

e. Grinnell G-Fire by Johnson Controls Company.

f. Griswold Controls.

g. Hays Fluid Controls.

h. HCI; Hydronics Components Inc.

i. Nexus Valve, Inc.

j. NIBCO INC.

k. NuTech Hydronic Specialty Products.

l. Oventrop Corporation.

m. Red-White Valve Corp.

n. TACO Comfort Solutions, Inc.

o. Tour & Andersson; available through Victaulic Company.

p. Tunstall Corporation.

q. Victaulic Company.

r. WATTS.

2. Body: Bronze, ball or plug type with calibrated orifice or venturi.

3. Ball: Brass or stainless steel.

4. Plug: Resin.

5. Seat: PTFE.

6. End Connections: Threaded or socket.

7. Pressure Gage Connections: Integral seals for portable differential pressure meter.

8. Handle Style: Lever, with memory stop to retain set position.

9. CWP Rating: Minimum 125 psig.

10. Maximum Operating Temperature: 250 deg F.

E. Cast-Iron or Steel, Calibrated-Orifice, Balancing Valves:

1. Manufacturers: Subject to compliance with requirements, provide products by one of the following:

a. Armstrong Pumps, Inc.

b. Bell & Gossett; a Xylem brand.

c. Flow Design, Inc.

d. Gerand Engineering Co.

e. Grinnell G-Fire by Johnson Controls Company.

f. Griswold Controls.

g. Hays Fluid Controls.

h. HCI; Hydronics Components Inc.

i. Nexus Valve, Inc.

j. NIBCO INC.

k. NuTech Hydronic Specialty Products.

l. Oventrop Corporation.

m. Red-White Valve Corp.

n. TACO Comfort Solutions, Inc.

o. Tour & Andersson; available through Victaulic Company.

p. Tunstall Corporation.

q. Victaulic Company.

r. WATTS.

2. Body: Cast-iron or steel body, ball, plug, or globe pattern with calibrated orifice or venturi.

3. Ball: Brass or stainless steel.

4. Stem Seals: EPDM O-rings.

5. Disc: Glass and carbon-filled PTFE.

6. Seat: PTFE.

7. End Connections: Flanged or grooved.

8. Pressure Gage Connections: Integral seals for portable differential pressure meter.

9. Handle Style: Lever, with memory stop to retain set position.

10. CWP Rating: Minimum 125 psig.

11. Maximum Operating Temperature: 250 deg F.

F. Diaphragm-Operated, Pressure-Reducing Valves: ASME labeled.

1. Manufacturers: Subject to compliance with requirements, provide products by one of the following:

a. AMTROL, Inc.

b. Apollo Valves; a part of Aalberts Integrated Piping Systems.

c. Armstrong Pumps, Inc.

d. Bell & Gossett; a Xylem brand.

e. Spence Engineering Company, Inc.

f. Victaulic Company.

g. WATTS.

2. Body: Bronze or brass.

3. Disc: Glass and carbon-filled PTFE.

4. Seat: Brass.

5. Stem Seals: EPDM O-rings.

6. Diaphragm: EPT.

7. Low inlet-pressure check valve.

8. Inlet Strainer: , removable without system shutdown.

9. Valve Seat and Stem: Noncorrosive.

10. Valve Size, Capacity, and Operating Pressure: Selected to suit system in which installed, with operating pressure and capacity factory set and field adjustable.

G. Diaphragm-Operated Safety Valves: ASME labeled.

1. Manufacturers: Subject to compliance with requirements, provide products by one of the following:

   a. AMTROL, Inc.

   b. Apollo Valves; a part of Aalberts Integrated Piping Systems.

   c. Armstrong Pumps, Inc.

   d. Bell & Gossett; a Xylem brand.

   e. Spence Engineering Company, Inc.

   f. WATTS.

2. Body: Bronze or brass.

3. Disc: Glass and carbon-filled PTFE.

4. Seat: Brass.

5. Stem Seals: EPDM O-rings.

6. Diaphragm: EPT.

7. Wetted, Internal Work Parts: Brass and rubber.

8. Inlet Strainer: , removable without system shutdown.

9. Valve Seat and Stem: Noncorrosive.

10. Valve Size, Capacity, and Operating Pressure: Comply with ASME Boiler and Pressure Vessel Code: Section IV, and selected to suit system in which installed, with operating pressure and capacity factory set and field adjustable.

H. Automatic Flow-Control Valves:

1. Manufacturers: Subject to compliance with requirements, provide products by one of the following:

    a. Caleffi.

    b. Flow Design, Inc.

    c. Flowcon Americas LLC.

    d. Griswold Controls.

    e. Hays Fluid Controls.

    f. HCI; Hydronics Components Inc.

    g. Nexus Valve, Inc.

    h. NIBCO INC.

    i. NuTech Hydronic Specialty Products.

    j. Oventrop Corporation.

    k. Red-White Valve Corp.

    l. Tunstall Corporation.

    m. WATTS.

2. Body: Brass or ferrous metal.

3. Flow Control Assembly, provide either of the following:

    a. Piston and Spring Assembly: Stainless steel, tamper proof, self-cleaning, and removable.

    b. Elastomeric Diaphragm and Polyphenylsulfone Orifice Plate: Operating ranges within 2- to 80-psig differential pressure.

4. Combination Assemblies: Include bronze or brass-alloy ball valve.

5. Identification Tag: Marked with zone identification, valve number, and flow rate.

6. Size: Same as pipe in which installed.

7. Performance: Maintain constant flow within plus or minus 10 percent, regardless of system pressure fluctuations.

8. Minimum CWP Rating: 175 psig.

9. Maximum Operating Temperature: 200 deg F.

2.02 AIR-CONTROL DEVICES

A. Manual Air Vents:

1. Manufacturers: Subject to compliance with requirements, provide products by one of the following:

a. AMTROL, Inc.

b. Apollo Valves; a part of Aalberts Integrated Piping Systems.

c. Armstrong Pumps, Inc.

d. Bell & Gossett; a Xylem brand.

e. Hays Fluid Controls.

f. HCI; Hydronics Components Inc.

g. Nexus Valve, Inc.

h. NuTech Hydronic Specialty Products.

i. TACO Comfort Solutions, Inc.

j. WATTS.

2. Body: Bronze.

3. Internal Parts: Nonferrous.

4. Operator: Screwdriver or thumbscrew.

5. Inlet Connection: NPS 1/2.

6. Discharge Connection: NPS 1/8.

7. CWP Rating: 150 psig.

8. Maximum Operating Temperature: 225 deg F.

B. Automatic Air Vents:

1. Manufacturers: Subject to compliance with requirements, provide products by one of the following:

a. AMTROL, Inc.

b. Armstrong Pumps, Inc.

c. Bell & Gossett; a Xylem brand.

d. Flamco; a division of AALBERTS Ind.

e. Nexus Valve, Inc.

f. NuTech Hydronic Specialty Products.

g. Spirotherm, Inc.

h. TACO Comfort Solutions, Inc.

i. WATTS.

2. Body: Bronze or cast iron.

3. Internal Parts: Nonferrous.

4. Operator: Noncorrosive metal float.

5. Inlet Connection: NPS 1/2.

6. Discharge Connection: NPS 1/4.

7. CWP Rating: 150 psig.

8. Maximum Operating Temperature: 240 deg F.

C. Expansion Tanks:

1. Manufacturers: Subject to compliance with requirements, provide products by one of the following:

a. AMTROL, Inc.

b. Armstrong Pumps, Inc.

c. Bell & Gossett; a Xylem brand.

d. Flo Fab Inc.

e. TACO Comfort Solutions, Inc.

f. WATTS.

2. Tank: Welded steel, rated for 125-psig working pressure and 375 deg F maximum operating temperature, with taps in bottom of tank for tank fitting and taps in end of tank for gage glass. Tanks shall be factory tested after taps are fabricated and shall be labeled according to ASME Boiler and Pressure Vessel Code: Section VIII, Division 1.

3. Air-Control Tank Fitting: Cast-iron body, copper-plated tube, brass vent tube plug, and stainless-steel ball check, 100-gal. unit only; sized for compression-tank diameter.

Provide tank fittings for 125-psig working pressure and 250 deg F maximum operating temperature.

4. Tank Drain Fitting: Brass body, nonferrous internal parts; 125-psig working pressure and 240 deg F maximum operating temperature; constructed to admit air to compression tank, drain water, and close off system.

5. Gage Glass: Full height with dual manual shutoff valves, 3/4-inch- diameter gage glass, and slotted-metal glass guard.

D. Bladder-Type ASME Expansion Tanks:

1. Manufacturers: Subject to compliance with requirements, provide products by one of the following:

a. AMTROL, Inc.

b. Armstrong Pumps, Inc.

c. Bell & Gossett; a Xylem brand.

d. Flo Fab Inc.

e. TACO Comfort Solutions, Inc.

f. WATTS.

2. Tank: Welded steel, rated for 125-psig working pressure and 375 deg F maximum operating temperature. Factory test after taps are fabricated and supports installed and are labeled according to ASME Boiler and Pressure Vessel Code: Section VIII, Division 1.

3. Bladder: Securely sealed into tank to separate air charge from system water to maintain required expansion capacity.

4. Air-Charge Fittings: Schrader valve, stainless steel with EPDM seats.

E. Diaphragm-Type Non-ASME Expansion Tanks:

1. Manufacturers: Subject to compliance with requirements, provide products by one of the following:

a. AMTROL, Inc.

b. Apollo Valves; a part of Aalberts Integrated Piping Systems.

c. Armstrong Pumps, Inc.

d. Bell & Gossett; a Xylem brand.

e. Flamco; a division of AALBERTS Ind.

f. Flo Fab Inc.

g. TACO Comfort Solutions, Inc.

h. WATTS.

2. Tank: Carbon steel, rated for minimum 100-psig working pressure at minimum 200 deg F maximum operating temperature. Non-ASME construction.

3. Diaphragm: Securely sealed into tank to separate air charge from system water to maintain required expansion capacity.

F. Air-Charge Fittings: Schrader valve, stainless steel with EPDM seats.

G. Coalescing-Type Air and Dirt Separators:

1. Manufacturers: Subject to compliance with requirements, provide products by one of the following:

a. Armstrong Pumps, Inc.

b. Bell & Gossett; a Xylem brand.

c. Spirotherm, Inc.

2. Tank: Fabricated steel tank; ASME constructed and stamped for 125-psig (862-kPa) working pressure and 270 deg F (130 deg C) maximum operating temperature.

3. Coalescing Medium: Stainless steel.

4. Air Vent: Threaded to the top of the separator.

5. Inline Inlet and Outlet Connections: Threaded for NPS 2 (DN 50) and smaller; Class 150 flanged connections for NPS 2-1/2 (DN 65) and larger.

6. Blowdown Connection: Threaded to the bottom of the separator.

7. Size: Match system flow capacity.

H. Tangential-Type Air Separators:

1. Manufacturers: Subject to compliance with requirements, provide products by one of the following:

a. AMTROL, Inc.

b. Armstrong Pumps, Inc.

c. Bell & Gossett; a Xylem brand.

d. Flamco; a division of AALBERTS Ind.

e. TACO Comfort Solutions, Inc.

2. Tank: Welded steel; ASME constructed and labeled for 125-psig minimum working pressure and 375 deg F maximum operating temperature.

3. Air Collector Tube: Perforated stainless steel, constructed to direct released air into expansion tank.

4. Tangential Inlet and Outlet Connections: Threaded for NPS 2 and smaller; flanged connections for NPS 2-1/2 and larger.

5. Blowdown Connection: Threaded.

6. Size: Match system flow capacity.

I. In-Line Air Separators:

1. Manufacturers: Subject to compliance with requirements, provide products by one of the following:

a. AMTROL, Inc.

b. Armstrong Products, Inc.

c. Bell & Gossett; a Xylem brand.

d. Spirotherm, Inc.

e. TACO Comfort Solutions, Inc.

2. Tank: One-piece cast iron with an integral weir constructed to decelerate system flow to maximize air separation.

3. Maximum Working Pressure: Up to 175 psig.

4. Maximum Operating Temperature: Up to 300 deg F.

J. Air Purgers:

1. Manufacturers: Subject to compliance with requirements, provide products by one of the following:

a. AMTROL, Inc.

b. Armstrong Pumps, Inc.

c. Bell & Gossett; a Xylem brand.

d. Spirotherm, Inc.

e. TACO Comfort Solutions, Inc.

f. WATTS.

2. Body: Cast iron with internal baffles that slow the water velocity to separate the air from solution and divert it to the vent for quick removal.

3. Maximum Working Pressure: 150 psig.

4. Maximum Operating Temperature: 250 deg F.

2.03 STRAINERS

A. Y-Pattern Strainers:

1. Manufacturers: Subject to compliance with requirements, provide products by one of the following:

a. Keckley Company.

b. Metraflex Company (The).

c. Titan Flow Control, Inc.

d. WATTS.

2. Body: ASTM A126, Class B, cast iron with bolted cover and bottom drain connection.

3. End Connections: Threaded ends for NPS 2 and smaller; flanged ends for NPS 2-1/2 and larger.

4. Strainer Screen: Stainless-steel, 40-mesh strainer, or perforated stainless-steel basket.

5. CWP Rating: 125 psig.

B. Basket Strainers:

1. Manufacturers: Subject to compliance with requirements, provide products by one of the following:

a. Keckley Company.

b. Metraflex Company (The).

c. Titan Flow Control, Inc.

d. WATTS.

2. Body: ASTM A126, Class B, high-tensile cast iron with bolted cover and bottom drain connection.

3. End Connections: Threaded ends for NPS 2 and smaller; flanged ends for NPS 2-1/2 and larger.

4. Strainer Screen: 60-mesh startup strainer, and perforated stainless-steel basket with 50 percent free area.

5. CWP Rating: 125 psig.

C. T-Pattern Strainers:

1. Body: Ductile or malleable iron with removable access coupling and end cap for strainer maintenance.

2. End Connections: Grooved ends.

3. Strainer Screen: 60-mesh startup strainer, and perforated stainless-steel basket with 57 percent free area.

4. CWP Rating: 750 psig.

2.04 CONNECTORS

A. Stainless-Steel Bellow, Flexible Connectors:

1. Body: Stainless-steel bellows with woven, flexible, bronze, wire-reinforcing protective jacket.

2. End Connections: Threaded or flanged to match equipment connected.

3. Performance: Capable of 3/4-inch misalignment.

4. CWP Rating: 150 psig.

5. Maximum Operating Temperature: 250 deg F.

B. Spherical, Rubber, Flexible Connectors:

1. Body: Fiber-reinforced rubber body.

2. End Connections: Steel flanges drilled to align with Classes 150 and 300 steel flanges.

3. Performance: Capable of misalignment.

4. CWP Rating: 150 psig.

5. Maximum Operating Temperature: 250 deg F.

PART 3 - EXECUTION

3.01 VALVE APPLICATIONS

A. Install shutoff-duty valves at each branch connection to supply mains and at supply connection to each piece of equipment.

B. Install calibrated-orifice, balancing valves at each branch connection to return main.

C. Install calibrated-orifice, balancing valves in the return pipe of each heating or cooling terminal.

D. Install check valves at each pump discharge and elsewhere as required to control flow direction.

E. Install safety valves at hot-water generators and elsewhere as required by ASME Boiler and Pressure Vessel Code. Install drip-pan elbow on safety-valve outlet and pipe without valves to the outdoors; pipe drain to nearest floor drain or as indicated on Drawings. Comply with ASME Boiler and Pressure Vessel Code: Section VIII, Division 1, for installation requirements.

F. Install pressure-reducing valves at makeup-water connection to regulate system fill pressure.

3.02 HYDRONIC SPECIALTIES INSTALLATION

A. Install manual air vents at high points in piping, at heat-transfer coils, and elsewhere as required for system air venting.

B. Install automatic air vents at high points of system piping in mechanical equipment rooms only. Install manual vents at heat-transfer coils and elsewhere as required for air venting.

C. Install piping from boiler air outlet, air separator, or air purger to expansion tank with a 2 percent upward slope toward tank.

D. Install in-line air separators in pump suction. Install drain valve on air separators NPS 2 and larger.

E. Install tangential air separator in pump suction. Install blowdown piping with gate or full-port ball valve; extend full size to nearest floor drain.

F. Install expansion tanks above the air separator. Install tank fitting in tank bottom and charge tank. Use manual vent for initial fill to establish proper water level in tank.

1. Install tank fittings that are shipped loose.

2. Support tank from floor or structure above with sufficient strength to carry weight of tank, piping connections, fittings, plus tank full of water. Do not overload building components and structural members.

G. Install expansion tanks on the floor. Vent and purge air from hydronic system, and ensure that tank is properly charged with air to suit system Project requirements.

END OF SECTION

23 21 23

HYDRONIC PUMPS

PART 1 - GENERAL

1.01 SECTION INCLUDES

A. Furnish and install pumps for mechanical systems except where integral with manufactured piece of equipment, including: Pumps and pump controls where self-contained.

1.02 RELATED SECTIONS

A. Section 23 05 13 – Common Motor Requirements for HVAC Equipment.

B. Section 23 05 48 – Vibration Controls for HVAC Ducts and Equipment.

C. Section 23 05 93 – Testing Adjusting and Balancing for HVAC.

D. Section 23 07 13 – HVAC Insulation.

E. Section 23 07 16 – Equipment Insulation.

1.03 SUBMITTALS

A. Include certified pump curves showing pump performance characteristics with pump and system operating point plotted. Include NPSH curve when applicable. For each pump with a motor horsepower greater than 10, submit a certified shop performance test curve indicating capacity, head, horsepower and flow rates from shutoff to 125 percent of design flow.

B. For centrifugal pumps, include certification that pump impeller diameter is less than 85 percent of the diameter of the maximum impeller possible (not to exceed cutwater diameter) for the pump casing, and that fabricated structural steel base is of sufficient strength to prevent vibration, warping or misalignment of the pump.

C. eed cutwater diameter) for the pump casing, and that fabricated structural steel base is of sufficient strength to prevent vibration, warping or misalignment of the pump.

D. Provide operation and maintenance manual.

PART 2 - PRODUCTS

1.04 MANUFACTURERS

A. General Pumps

1. Armstrong Fluid Technology.

2. Bell & Gossett

3. Aurora

1.05 GENERAL

B. Statically and dynamically balance rotating parts.

A. Capacity test for design flow after final assembly.

B. Construction to permit complete servicing without breaking piping or motor connections.

C. Pumps to operate at 1750 rpm, unless specified otherwise.

D. Complete pump assembly, including casing, flanges and seals, suitable for the service intended and the working pressure and temperatures scheduled for the system. Scheduled working pressure applies to the entire pump assembly including the suction and discharge flanges.

E. Pumps to be complete with grease lubricated ball bearings, grease fittings and relief plugs, unless stated otherwise hereinafter.

F. Free of flashing and cavitation at all flow rates from 25 to 125 percent of design flow under the suction conditions of the actual pump installation.

G. Critical speed at least 115 percent of the running speed listed in the schedule.

H. Pump connections to be flanged, except that on end suction, base mounted pumps connection sizes 2-1/2 inches and less may be threaded.

I. Heating pumps to be suitable for handling water at 230 degrees F.

J. Select motors to drive the pump through its characteristics curve from zero flow to 25 percent above the design flow without exceeding rated full load nameplate horsepower. Provide a non-overloading motor, such that the rated horsepower will not be exceeded at any point on the pump curve. Do not use the motor service factor.

K. Paint pumps.

2.01

2.02

2.03 SEPARATELY COUPLED, BASE-MOUNTED, END-SUCTION CENTRIFUGAL PUMPS

A. Description: Factory-assembled and -tested, centrifugal, overhung-impeller, separately coupled, end-suction pump designed for base mounting, with pump and motor shafts horizontal.

B. Pump Construction:

1. Casing: Radially split, cast iron, with replaceable bronze wear rings, threaded gage tappings at inlet and outlet, drain plug at bottom and air vent at top of volute, and flanged connections. Provide integral mount on volute to support the casing, and provide attached

piping to allow removal and replacement of impeller without disconnecting piping or requiring the realignment of pump and motor shaft.

2. d motor shaft.

3. Impeller: ASTM B584, cast bronze; statically and dynamically balanced, keyed to shaft, and secured with a locking cap screw. For pumps not frequency-drive controlled, trim impeller to match specified performance.

4. Pump Shaft: Stainless steel.

5. Seal: Mechanical seal consisting of carbon rotating ring against a ceramic seat held by a stainless-steel spring, Buna N or Viton bellows and gasket.

6. and gasket.

7. Pump Bearings: Grease-lubricated ball bearings in cast-iron housing with grease fittings.

C. Shaft Coupling: Molded-rubber insert and interlocking spider capable of absorbing vibration. EPDM coupling sleeve for variable-speed applications.

D. Coupling Guard: Dual rated; ANSI B15.1, Section 8; OSHA 1910.219 approved; steel; removable; attached to mounting frame.

E. Mounting Frame: Welded-steel frame and cross members, factory fabricated from ASTM A36/A36M channels and angles. Fabricate to mount pump casing, coupling guard, and motor.

F. Provide end suction pumps with suction diffusers.

G. Motor: Single speed, secured to mounting frame, with adjustable alignment.

1. Reference Section 230513for additional requirements.

2. Electrical Components, Devices, and Accessories: Listed and labeled as defined in NFPA 70, by a qualified testing agency, and marked for intended location and application.

3. Comply with NEMA designation, temperature rating, service factor, and efficiency requirements for motors specified in Section 230513 "Common Motor Requirements for HVAC Equipment."

a. Enclosure: Totally enclosed, fan cooled.

b. Enclosure Materials: Cast iron or Rolled steel.

c. Permanently lubricated ball bearings are available up through 5 hp. Larger motors have grease-lubricated ball bearings.

d. Efficiency: Premium efficient.

e. Inverter Duty

f. Service Factor: 1.15 Min

PART 3 - EXECUTION

2.04 INSTALLATION

A. Provide drains for bases and stuffing boxes piped to and discharging into floor drains.

B. Provide air cock and drain connection on horizontal pump casings.

C. Provide line sized butterfly valve and strainer on suction side and line sized soft seated check valve and butterfly valve on discharge side of all pumps. Provide calibrated balancing valve at pump discharge where indicated.

D. Decrease from line size with long radius reducing elbows or reducers. Support piping adjacent to pump such that no weight is carried on pump casings. Provide supports under elbows on pump suction and discharge line sizes 4 inch and over.

E. Ensure pumps operate at specified system fluid temperatures without vapor binding and cavitation, are non-overloading in parallel or individual operation, and operate within 25 percent of midpoint of published maximum efficiency curve.

F. Level and align pump baseplate, pump and driver. Provide metal supporting blocks, wedges and shims as required. Rigidly bolt pump base plate to the concrete base. After final alignment of centrifugal pumps, 25 horsepower and larger, dowel the pump and motor to the base.

G. Install frame mounted pumps on housekeeping pad with inertia base where indicated. Pad shall be a minimum of 6″ in height. Use 3000-psi, 28-day compressive-strength concrete and reinforcement. Install anchor bolts to elevations required for proper attachment to supported equipment.

H. Install inline pumps in piping. Support per manufacturer's recommendations with spring isolation hangers.

I. Install pumps level in accordance with pump manufacturer's written recommendations

J. Ensure that pump is pipe-mounted and free to float with any movement, expansion and contraction of piping system.

1. Support pump using floor mounted saddle as required.

2. For vertical in-line pumps supported from structure, ensure no pipe strain is imposed on pump flanges.

3. Use vibration isolators, neoprene isolation pads to meet project conditions in accordance with Section 23 05 48 – Vibration Isolation.

4. Where pumps are supported entirely by piping system ensure hangers are sized for extra load of pump weight.

K. Install suction guides on pump suction connection.

L. Install pressure gauges on suction and discharge pump connections.

M. Install hangers and supports in accordance with Section 23 05 39 - Sleeves, Flashings, Supports and Anchors.

1. Adjust hangers and supports after pump is installed to ensure proper support.

N. Align pipe flanges with pump flanges and bolt together in accordance with pump manufacturer's written recommendations.

O. Connect pumps to electrical distribution system to IEEE regulations and with authority having jurisdiction in accordance with Section 26 05 00 – Common Work Results for Electrical.

1. Include wiring to most remote sensor in system where applicable.

a. Do not run pumps dry to check rotation.

2.05 FIELD QUALITY CONTROL

P. Field Inspection: Coordinate field inspection in accordance with Section 01 45 00 Quality Control.

Q. Manufacturer's Services:

1. Manufacturer's Field Services: Provide manufacturer's field services consisting of installation supervision and start-up services.

a. Report any inconsistencies from manufacturer's recommendations immediately to Consultant.

2. Schedule site visits to review work at stages listed:

a. After delivery and storage of pumps, controls and components, and when preparatory work on which Work of this Section depends is complete, but before installation begins.

b. Upon completion of Work, after cleaning is carried out.

c. Obtain reports within three (3) days of review and submit immediately to Consultant.

2.06 COMMISSIONING

R. Validate alignment, rotation, motor current draw, flows and pressures in accordance with Section 23 08 00 – Commissioning of HVAC.

2.07 PROTECTION

S. Protect installed products and components from damage during construction.

T. Repair damage to adjacent materials caused by hydronic pump installation.

END OF SECTION

23 25 13

WATER TREATMENT FOR CLOSED-LOOP HYDRONIC SYSTEMS

PART 1 - GENERAL

1.01 RELATED DOCUMENTS

A. Drawings and general provisions of the Contract, including General and Supplementary Conditions and Division 01 Specification Sections, apply to this Section.

1.02 SUMMARY

A. Section includes the following water treatment for closed-loop hydronic systems:

1. [Manual] [Automatic] chemical-feed equipment.

2. Chemicals.

B. Related Requirements:

1. Section 232533 "HVAC Makeup-Water Filtration Equipment" for water treatment of water softeners, RO equipment, and filtration equipment.

1.03 DEFINITIONS

A. RO: Reverse osmosis.

B. TDS: Total dissolved solids consist of salts and other materials that combine with water as a solution.

C. TSS: Total suspended solids include both organic and inorganic solids that are suspended in the water. These solids may include silt, plankton, and industrial wastes.

1.04 ACTION SUBMITTALS

A. Product Data: Include rated capacities, operating characteristics, and furnished specialties and accessories for the following products:

1. Bypass feeders.

2. Water meters.

3. Inhibitor injection timers.

4. pH controllers.

5. Chemical solution tanks.

6. Injection pumps.

7. Chemical-treatment test equipment.

8. Chemical material safety data sheets.

9. Inhibited ethylene glycol.

10. Inhibited propylene glycol.

B. Shop Drawings: Pretreatment and chemical-treatment equipment, showing tanks, maintenance space required, and piping connections to hydronic systems.

1. Include plans, elevations, sections, and attachment details.

2. Include diagrams for power, signal, and control wiring.

1.05 INFORMATIONAL SUBMITTALS

A. Seismic Qualification Certificates: For components, from manufacturer.

1. Basis for Certification: Indicate whether withstand certification is based on actual test of assembled components or on calculation.

2. Dimensioned Outline Drawings of Equipment Unit: Identify center of gravity and locate and describe mounting and anchorage provisions.

3. Detailed description of equipment anchorage devices on which the certification is based and their installation requirements.

B. Water-Analysis Provider Qualifications: Verification of experience and capability of HVAC water-treatment service provider.

C. Field quality-control reports.

D. Water-Treatment Program: Written sequence of operation on an annual basis for the application equipment required to achieve water quality defined in "Performance Requirements" Article.

E. Water Analysis: Illustrate water quality available at Project site.

1.06 CLOSEOUT SUBMITTALS

A. Operation and Maintenance Data: For sensors, injection pumps, and controllers to include in emergency, operation, and maintenance manuals.

1.07 QUALITY ASSURANCE

A. HVAC Water-Treatment Service Provider Qualifications: An experienced HVAC water-treatment service provider, capable of analyzing water qualities, installing water-treatment equipment, and applying water treatment as specified in this Section.

PART 2 - PRODUCTS

2.01 HVAC WATER-TREATMENT MANUFACTURERS

A. Manufacturers: Subject to compliance with requirements, provide products by one of the following:

1. Anderson Chemical Company.
2. Aqua-Chem, Inc.
3. Barclay Water Management, Inc.
4. Boland Trane Services.
5. Cascade Water Services, Inc.
6. Earthwise Environmental Inc.
7. H-O-H Water Technology, Inc.
8. Metro Group, Inc. (The).
9. Nalco; an Ecolab company.
10. Sonitec-Vortisand Inc.
11. Suez Water Technologies (Formerly GE Water).
12. Watcon, Inc.

2.02 PERFORMANCE REQUIREMENTS

A. Provide all hardware, chemicals, and other material necessary to maintain HVAC water quality in all systems, as indicated in this Specification. Water quality for hydronic systems shall minimize corrosion, scale buildup, and biological growth for optimum efficiency of hydronic equipment without creating a hazard to operating personnel or the environment.

B. erating personnel or the environment.

C. Base HVAC water treatment on quality of water available at Project site, hydronic system equipment material characteristics and functional performance characteristics, operating personnel capabilities, and requirements and guidelines of authorities having jurisdiction.

D. Closed hydronic systems, including [hot-water heating below 250 deg F] [chilled water] [dual-temperature water] [glycol heating] [and] [glycol cooling] shall have the following water qualities:

1. pH: Maintain a value within <Insert range>.
2. Alkalinity: Maintain a value within <Insert range> mg/L as CaCO(3).

3. Steel Corrosion Inhibiters: Provide sufficient inhibitors to limit mild steel corrosion to 1 mils per year.

4. Yellow Metal Corrosion Inhibitor: Provide sufficient copper and brass corrosion inhibitors to limit copper corrosion to 1 mils per year.

5. Scale Control: Provide softened water for initial fill and makeup. Where softened water is not used, provide sufficient scale inhibitors to prevent formation of scale and maintain all scale-forming material in solution.

6. Dispersants: Provide sufficient dispersants to prevent sedimentation of fine particulate matter.

7. Microbiological Limits:

   a. Total Aerobic Plate Count: Maintain a maximum value of 1000 organisms/mL.

   b. Total Anaerobic Plate Count: Maintain a maximum value of 100 organisms/mL.

   c. Nitrate Reducers: Maintain a maximum value of 100 organisms/mL.

   d. Sulfate Reducers: Maintain a maximum value of 0 organisms/mL.

   e. Iron Bacteria: Maintain a maximum value of 0 organisms/mL.

2.03 MANUAL CHEMICAL-FEED EQUIPMENT

A. Bypass Feeders: Provide steel feeders with corrosion-resistant exterior coating, minimum 3-1/2-inch fill opening in the top, and NPS 3/4 bottom inlet and top side outlet. Provide quarter turn or threaded fill cap with gasket seal and diaphragm to lock the top on the feeder when exposed to system pressure in the vessel.

   1. Capacity: 5 gal..

   2. Minimum Working Pressure: 175 psig.

2.04 AUTOMATIC CHEMICAL-FEED EQUIPMENT

A. Water Meter, Piston Type, Threaded:

   1. AWWA C700, oscillating-piston, magnetic-drive, totalization meter.

   2. Body: Bronze.

   3. Minimum Working-Pressure Rating: 150 psig.

   4. Maximum Pressure Loss at Design Flow: 3 psig.

   5. Registration: Gallons or cubic feet.

   6. End Connections: Threaded.

7. Controls: Flow-control switch with normally open contacts, rated for maximum 10 A, 250-V ac, that will momentarily close at adjustable increments of total flow.

8. Electronic or digital interface for flow rate indication at central workstation compatible with DDC system, as described in Section 230923 "Direct Digital Control (DDC) System for HVAC." Low-voltage signal must be capable of transmitting 1000 feet.

9. Electrical Components, Devices, and Accessories: Listed and labeled as defined in NFPA 70, by a qualified testing agency, and marked for intended location and application.

B. Water Meter, Turbine Type, Threaded:

1. AWWA C701, turbine-type, totalization meter.

2. Body: Bronze.

3. Minimum Working-Pressure Rating: 100 psig.

4. Maximum Pressure Loss at Design Flow: 3 psig.

5. Registration: Gallons or cubic feet.

6. End Connections: Threaded.

7. Controls: Flow-control switch with normally open contacts. rated for maximum 10 A, 250-V ac, that will momentarily close at adjustable increments of total flow.

8. Electronic or digital interface for flow rate indication at central workstation compatible with DDC system, as described in Section 230923 "Direct Digital Control (DDC) System for HVAC." Low-voltage signal must be capable of transmitting 1000 feet.

9. Electrical Components, Devices, and Accessories: Listed and labeled as defined in NFPA 70, by a qualified testing agency, and marked for intended location and application.

C. Water Meter, Turbine Type, Flanged:

1. AWWA C701, turbine-type, totalization meter.

2. Body: Bronze.

3. Minimum Working-Pressure Rating: 150 psig.

4. Maximum Pressure Loss at Design Flow: 3 psig.

5. Registration: Gallons or cubic feet.

6. End Connections: Flanged.

7. Controls: Flow-control switch with normally open contacts, rated for maximum 10 A, 250-V ac, that will momentarily close at adjustable increments of total flow.

8. Electronic or digital interface for flow rate indication at central workstation compatible with DDC system, as described in Section 230923 "Direct Digital Control (DDC) System for HVAC." Low-voltage signal must be capable of transmitting 1000 feet.

9. Electrical Components, Devices, and Accessories: Listed and labeled as defined in NFPA 70, by a qualified testing agency, and marked for intended location and application.

D. Chemical Solution Tanks:

1. Chemical-resistant reservoirs fabricated from high-density opaque polyethylene with minimum 110 percent containment vessel.

2. Molded cover with recess for mounting pump.

3. Capacity: 50 gal.

E. Chemical Solution Injection Pumps:

1. Self-priming, positive displacement; rated for intended chemical with minimum 25 percent safety factor for design pressure and temperature.

2. Adjustable flow rate.

3. Metal and thermoplastic construction.

4. Built-in relief valve.

5. Fully enclosed, continuous-duty, single-phase motor. Comply with requirements in Section 230513 "Common Motor Requirements for HVAC Equipment."

6. Electrical Components, Devices, and Accessories: Listed and labeled as defined in NFPA 70, by a qualified testing agency, and marked for intended location and application.

F. Chemical Solution Tubing: Polyethylene tubing with compression fittings and joints except ASTM A269/A269M, Type 304 stainless steel for steam boiler injection assemblies.

G. Injection Assembly:

1. Quill: Minimum NPS 1/2 with insertion length sufficient to discharge into at least 25 percent of pipe diameter.

2. Ball Valve: Two-piece, stainless steel; selected to fit quill.

3. Packing Gland: Mechanical seal on quill of sufficient length to allow quill removal during system operation.

4. Assembly Pressure/Temperature Rating: Minimum 600 psig at 200 deg F.

2.05 CHEMICAL-TREATMENT TEST EQUIPMENT

A. Test Kit: Manufacturer-recommended equipment and chemicals in a wall-mounted cabinet for testing pH, corrosion inhibitors, alkalinity, hardness, and other properties recommended by manufacturer.

B. Corrosion Test-Coupon Assembly: Constructed of corrosive-resistant material, complete with piping, valves, and mild steel and copper coupons. Locate copper coupon downstream from mild steel coupon in the test-coupon assembly.

1. Two-station rack for closed-loop systems.

2.06 CHEMICALS

A. Chemicals shall be as recommended by water-treatment system manufacturer, compatible with piping system components and connected equipment, and able to attain water quality specified in "Performance Requirements" Article.

2.07 INHIBITED ETHYLENE GLYCOL AND PROPYLENE GLYCOL

A. Manufacturers: Subject to compliance with requirements, provide products by one of the following:

1. Dow Chemical Company (The).
2. Dynalene.
3. Fremont Industries.
4. Houghton Chemical Corp.

B. Inhibited Ethylene Glycol:

1. Ethylene glycol with inhibitor additive, to provide freeze protection for heat-transfer fluid and corrosion protection for carbon-steel, brass, copper, stainless steel, and cast-iron piping and fittings.

2. Inhibitor creates a passive layer on all surfaces that contact ethylene glycol to prevent corrosion and stabilizes fluid pH, to compensate for acids formed from glycol degradation.

3. pH value shall be maintained between 9.0 and 10.5, with reserve alkalinity greater than 12 mL.

4. Concentrated inhibited ethylene glycol is to be 95.5 percent ethylene glycol by weight and 4.5 percent performance additives.

5. Concentrated inhibited ethylene glycol is mixed with water in proper proportion specified by the manufacturer to provide freeze protection to 0 deg F. Premixed heat-transfer fluid

may be used, or glycol/water mixture may be prepared at time of installation. Use only deionized water for mixing.

6. Provide only ethylene glycol that is specifically blended for HVAC application. Automotive-type antifreeze is unacceptable.

C. Inhibited Propylene Glycol:

1. Propylene glycol with inhibitor additive, to provide freeze protection for heat-transfer fluid and corrosion protection for carbon steel, brass, copper, stainless steel, and cast-iron piping and fittings.

2. Inhibitor creates a passive layer on all surfaces that contact propylene glycol to prevent corrosion and stabilizes fluid pH, to compensate for acids formed from glycol degradation.

3. pH value shall be maintained between 8.8 to 9.5.

4. Concentrated inhibited propylene glycol is to be 95.5 percent propylene glycol by weight and 4.5 percent performance additives.

5. Concentrated inhibited propylene glycol is mixed with water in proper proportion specified by the manufacturer to provide freeze protection to 0 deg F. Premixed heat-transfer fluid may be used, or glycol/water mixture may be prepared at the time of installation. Use only deionized water for mixing.

6. Provide only propylene glycol that is specifically blended for HVAC application. Automotive-type antifreeze is unacceptable.

PART 3 - EXECUTION

3.01 WATER ANALYSIS

A. Perform an analysis of supply water to determine quality of water available at Project site.

3.02 INSTALLATION

A. Install chemical-application equipment on concrete bases, level and plumb. Maintain manufacturer's recommended clearances. Arrange units, so controls and devices that require servicing are accessible. Anchor chemical tanks and floor-mounting accessories to substrate. Install all chemical application equipment within a spill-containment area without floor drain.

B. Install seismic restraints for equipment and floor-mounting accessories, and anchor to building structure. Comply with requirements in Section 230548 "Vibration and Seismic Controls for HVAC" for seismic restraints.

C. Install water-testing equipment on wall near water-chemical-application equipment.

D. Install interconnecting control wiring for chemical-treatment controls and sensors.

E. Mount sensors and injectors in piping circuits.

F. Bypass Feeders: Install in closed hydronic systems and equip with the following:

1. Install bypass feeder in a bypass circuit around circulating pumps unless indicated otherwise on Drawings.

2. Install test-coupon assembly in bypass circuit around circulating pumps unless otherwise indicated on Drawings.

3. Install a gate or full-port ball isolation valves on inlet, outlet, and drain below the feeder inlet.

4. Install a swing check on the inlet after the isolation valve.

G. Install automatic fluid make-up equipment for glycol water system, and include the following:

1. Chemical solution tanks.

2. Chemical solution injection pumps.

3. Water meter in makeup supply to system.

4. Pressure switch to operate injection pump as necessary to maintain glycol system pressure.

3.03 PIPING CONNECTIONS

A. Piping installation requirement are specified in other Sections. Drawings indicate general arrangement of piping, fittings, and specialties.

B. Where installing piping adjacent to equipment, allow space for service and maintenance.

C. Make piping connections between HVAC water-treatment equipment and dissimilar-metal piping with dielectric fittings. Dielectric fittings are specified in Section 232113 "Hydronic Piping."

D. Install shutoff valves on HVAC water-treatment equipment inlet and outlet. Metal general-duty valves are specified in Section 230523.11 "Globe Valves for HVAC Piping," Section 230523.12 "Ball Valves for HVAC Piping," Section 230523.13 "Butterfly Valves for HVAC Piping," and Section 230523.15 "Gate Valves for HVAC Piping."

E. Comply with requirements in Section 221119 "Domestic Water Piping Specialties" for backflow preventers required in makeup-water connections to potable-water systems.

3.04 ELECTRICAL CONNECTIONS

A. Confirm applicable electrical requirements in electrical Sections for connecting electrical equipment.

B. Ground equipment in accordance with Section 260526 "Grounding and Bonding for Electrical Systems."

C. Connect wiring in accordance with Section 260519 "Low-Voltage Electrical Power Conductors and Cables."

3.05 FIELD QUALITY CONTROL

A. Testing Agency: Owner will engage a qualified testing agency to perform tests and inspections.

B. Testing Agency: Engage a qualified testing agency to perform tests and inspections.

C. Manufacturer's Field Service: Engage a factory-authorized service representative to test and inspect components, assemblies, and equipment installations, including connections.

D. Perform tests and inspections with the assistance of a factory-authorized service representative.

E. Tests and Inspections:

1. Inspect field-assembled components and equipment installation, including piping and electrical connections.

2. Inspect piping and equipment to determine that systems and equipment have been cleaned, flushed, and filled with water, and are fully operational before introducing chemicals for water-treatment system.

3. Place HVAC water-treatment system into operation and calibrate controls during the preliminary phase of hydronic systems' startup procedures.

4. Do not enclose, cover, or put piping into operation until it is tested and satisfactory test results are achieved.

5. Test for leaks and defects. If testing is performed in segments, submit separate report for each test, complete with diagram of portion of piping tested.

6. Leave uncovered and unconcealed new, altered, extended, and replaced water piping until it has been tested and approved. Expose work that has been covered or concealed before it has been tested and approved.

7. Cap and subject piping to static water pressure of 50 psig above operating pressure, without exceeding pressure rating of piping system materials. Isolate test source and allow test pressure to stand for four hours. Leaks and loss in test pressure constitute defects.

8. Repair leaks and defects with new materials, and retest piping until no leaks exist.

F. Equipment will be considered defective if it does not pass tests and inspections.

G. Prepare test and inspection reports.

H. At six-week intervals following Substantial Completion, perform separate water analyses on hydronic systems to show that automatic chemical-feed systems are maintaining water quality within performance requirements specified in this Section. Submit written reports of water analysis, advising Owner of changes necessary to adhere to "Performance Requirements" Article.

I. Comply with ASTM D3370 and with the following standards:

1. Silica: ASTM D859.

2. Acidity and Alkalinity: ASTM D1067.

3. Iron: ASTM D1068.

4. Water Hardness: ASTM D1126.

3.06 MAINTENANCE SERVICE

A. Scope of Maintenance Service: Provide chemicals and service program to maintain water conditions required above, to inhibit corrosion and scale formation for hydronic piping and equipment. Services and chemicals shall be provided for a period of one year from date of Substantial Completion and shall include the following:

1. Initial water analysis and HVAC water-treatment recommendations.

2. Startup assistance for Contractor to flush the systems, clean with detergents, and initially fill systems with required chemical treatment prior to operation.

3. Periodic field service and consultation.

4. Customer report charts and log sheets.

5. Laboratory technical analysis.

6. Analyses and reports of all chemical items concerning safety and compliance with government regulations.

3.07 DEMONSTRATION

A. Engage a factory-authorized service representative to train Owner's maintenance personnel to adjust, operate, and maintain HVAC water-treatment systems and equipment.

END OF SECTION 232513

23 31 13

METAL DUCTS

PART 1 - GENERAL

1.01 WORK INCLUDED

A. HVAC air distribution ductwork.

B. Duct pressure testing.

1.02 RELATED WORK

A. Section 09900 - Painting: Weld priming, weather resistant, paint or coating.

B. Section 15140 - Supports and Anchors: Sleeves.

C. Section 15250 - Mechanical Insulation.

D. Section 15910 - Duct Accessories.

E. Section 15990 - Testing, Adjusting and Balancing.

F. Section 013300 Submittals.

G. Section 01524 Construction Waste Management

H. Section 01611 Environmental Management

I. Section 01570 Pollution Prevention and Control

1.03 REFERENCES

A. ASHRAE – Fundamentals Handbook, Latest Version; Duct Design.

B. ASHRAE - HVAC Systems and Equipment Handbook, Latest Version; Duct Construction.

C. ASTM A 90 - Weight of Coating on Zinc-Coated (Galvanized) Iron or Steel Articles.

D. ASTM A 525 - General Requirements for Steel Sheet, Zinc-Coated (Galvanized) by the Hot-Dip Process.

E. ASTM A 527 - Steel Sheet, Zinc-Coated (Galvanized) by Hot-Dip Process, Lock Forming Quality.

F. NFPA 90A - Installation of Air Conditioning and Ventilating Systems.

G. NFPA 90B - Installation of Warm Air Heating and Air Conditioning Systems.

H. SMACNA - Duct Construction Standards.

I. UL 181 - Factory-Made Air Ducts and Connectors.

J. ASTM A 167 - Stainless and Heat-Resisting Chromium-Nickel Steel Plate, Sheet, and Strip.

K. NFPA 96 - Installation of Equipment for the Removal of Smoke and Grease-Laden Vapors from Commercial Cooling Equipment.

1.04 DEFINITIONS

A. WG - Water Gauge

B. Static Pressure - Total air pressure less velocity air pressure. Static pressure type is defines as positive or negative pressures relative to standard atmospheric conditions unless denoted otherwise.

C. Duct Size - Net inside clear dimensions after insulation. Where offsets or transitions are required, the duct shall maintain the equivalent area based on hydraulic diameter and rectangular duct size for equal flow, velocity and pressure drop as calculated by Huebscher Formula #30 and/or #31 in ASHRAE Duct Design Fundamentals Handbook and associated Friction Chart for round duct.

D. Pressure Classification - SMACNA standard classification system for ductwork applications not exceeding listed static pressure and velocity services. SMACNA standard static pressure classes are defined as follows:

Pressure Class	Operating Pressure (WG)	Pressure Type	Max Velocity (fpm)	Seal Class
½	< 1/2”	Any	< 2,000	C
1	>½” to 1”	Any	< 2,500	C
2	>1” to 2”	Any	< 2,500	B (note 1)
3	>2” to 3”	Any	<4,000	B
4	>3” to 4”	Positive Only	<4,000	A
6	>4” to 6”	Positive Only	As Indicated	A
10	>6” to 10”	Positive Only	As Indicated	A

Notes 1: Seal Class B required exceeding SMACNA minimum requirement.

1.05 SUBMITTALS

A. Refer to other applicable sections for additional coordination drawings, duct shop drawings and product data and conform to provisions of Division 1.

B. Shop Drawings:

1. Prepare and submit ductwork shop drawings prior to fabrication and installation of ductwork. Contract documents are schematic in nature and are not an acceptable substitute for ductwork shop drawings.

2. Include floor plans drawn to scale not less than 1"=1/4" over appropriate project backgrounds. Include duct elevations and sections where proposed duct configurations cannot be fully depicted in plan view.

3. Include relevant details such as duct size dimensions, pressure classification, sheet metal gages, joining methodology, duct construction technology, fittings and duct accessories prior to start of work.

4. Include coordination with the work of other applicable trades including architectural partitions, piping, electrical, lighting, and ceiling systems.

5. Indicate bottom of duct elevation dimensions.

6. Include details for offsets and transitions as required to permit ductwork to fit in the installation space allocated. Verify actual project field conditions and measurements as required.

7. Owner assumes no responsibility for reimbursing additional costs for duct revisions and/or rework required as a result of failure to prepare fully developed and detailed shop drawings.

C. Product data. Unless otherwise indicated, submit the following for each type of product provided under work of this Section:

1. Recycled Content:

   a. Indicate recycled content; indicate percentage of pre-consumer and post-consumer recycled content per unit of product.

2. Local/Regional Materials:

   a. Indicate location of manufacturing facility; indicate distance between manufacturing facility and the project site.

   b. Indicate location of extraction, harvesting, and recovery; indicate distance between extraction, harvesting, and recovery and the project site.

3. VOC data:

   a. Submit manufacturer's product data for joint compounds. Indicate VOC and chemical component limits of the product. Submit MSDS highlighting VOC and chemical component limits. VOC contents and chemical component limits must be less than the limits of Green Seal's Standard GS-11.

b. Submit manufacturer's certification that products comply with Green Seal's Standard GS-11

c. Submit environmental data in accordance with Table 1 of ASTM E2129 for products provided under work of this Section.

4. Submit the following according to Conditions of the Construction Contract.

a. Product data. Unless otherwise indicated, submit the following for each type of product provided under work of this Section:

5. General: Submit additional LEED submittal requirements included in other sections of the Specifications.

6. LEED submittals are in addition to other submittals. If submitted item is identical to that submitted to comply with other requirements, submit duplicate copies as a separate submittal to verify compliance with indicated LEED requirements.

1.06 DELIVERY, STORAGE, AND HANDLING

A. Deliver, store, and protect products under provisions of Division 1.

B. Protect duct from exposure to weather. Do not store duct in uncovered areas.

C. Protect duct from contamination by covering openings until the time of installation. Maintain coverings over installed duct openings throughout construction progress until duct system is fully closed and complete.

D. Prevent entry into and/or habitation of ductwork by animals during storage and construction.

E. Restore ductwork to like-new condition or replace contaminated by lack of adequate protection at no additional cost to owner.

1.07 QUALITY CONTROL

A. Obtain manufacturer's inspection and acceptance of installation of duct at beginning of installation for factory prefabricated duct systems.

B. Provide 100% visual inspection of duct joint sealing prior to installation of thermal insulation coverings.

C. PRESSURE TESTING

1. Pressure test ducts rated for Pressure Class 3 inch or higher.

2. Conduct tests using procedures consistent with SMACNA HVAC Duct Leakage Test Manual.

3. Determine maximum acceptable rate of air leakage using duct leakage formula as follows:

$$F = C_L \times P^{0.65}$$

Where: F = Maximum permissible airflow leakage in cfm/100 sq. ft. duct surface

P = Ducts static pressure in inch WG

C_L = Leakage Class according to the table below

Duct Construction	Seal Class A	Seal Class B
Rectangular Construction	$C_L = 6$	$C_L = 12$
Round or Oval Construction	$C_L = 3$	$C_L = 6$

4. Conduct duct leakage tests witnessed in writing by owner’s designated representative, independent TAB service, project commissioning authority, independent construction inspector, engineer of record, and/or authority having jurisdiction where required. Schedule testing with advance notification for test witness(s).

5. Correct and retest ducts failing leakage tests at no additional cost to owner.

PART 2 - PRODUCTS

2.01 ENVIRONMENTALLY PREFERABLE PRODUCTS

A. Provide environmentally preferable products to the greatest extent possible.

1. To the greatest extent possible, provide products and materials that promote stewardship of the earth's resources, promote good indoor environmental quality (IEQ), and promote efficiencies in operational performance.

B. Provide products listed on the EPA Comprehensive Procurement Guidelines to the greatest extent practicable.

C. Provide products listed on the USGBC Directory of Products and Services to the greatest extent possible.

2.02 RECYCLED CONTENT

A. Provide recycled content products to the greatest extent possible.

1. To the greatest extent possible, provide materials with recycled content such that the sum of post-consumer recycled content plus one-half of the post-industrial content constitutes at least 10% of the total value of the materials in the project.

2.03 REGIONAL MATERIALS

A. Provide Regional materials and products to the greatest extent possible that are extracted and manufactured within the region.

1. Provide materials and products that use a minimum of 20 % of building products that are manufactured regionally within a radius of 500 miles from the project site.

a. Manufacturing refers to the final assembly of components into the building product that is furnished and installed by the tradesman.

2. Of the regionally manufactured materials used and documented, use a minimum of 50% of building materials and products that are extracted, harvested or recovered (as well as manufactured) within 500 miles of the project site.

2.04 ACCEPTABLE MANUFACTURERS

A. Flexible Duct Runouts

1. Flex-master.

2. Thermaflex

3. JP Lamborn Co.

2.05 MATERIALS

A. General: Non-combustible and conforming to requirements for Class 1 air duct materials, or UL 181.

B. Non-Welded Steel Ducts: ASTM A525 galvanized steel sheet, lock-forming quality, having zinc coating of 1.25 oz per sq. ft. for each side in conformance with ASTM A90.

C. Welded Carbon Steel Ducts: ASTM 568 rolled carbon steel; SMAW, FCAW, or GMAW welded; minimum 18 gauge sheet metal thickness.

D. Welded Stainless Steel Ducts: ASTM A167, Type 304; GMAW welded; minimum 16 gauge sheet metal thickness.

E. Fasteners: Rivets, bolts, or sheet metal screws matching base duct materials.

F. Sealant: Non-hardening, water resistant, fire resistive, suitable for applications and compatible with mating materials

1. High solids mastics - high density type with excellent adhesions and elasticity suitable for sealing fillets, groves, and flanges.

2. Liquid sealants - formulated specifically for duct applications containing not more than 60% volatiles suitable for filling voids 1/16 inch or less. Provide taped joint reinforcement for liquid sealants except machine fabricated longitudinal seams and slip-type joints.

3. Reinforcing tapes - suitable for use with liquid sealed joints only. Pressure sensitive adhesive tape sealing systems are not acceptable without liquid mastic overcoat.

4. Gaskets: soft elastomeric butyl rubber with adhesive backing suitable for use with flanged joints.

5. Liquid sealants containing not more than 50% volatiles. May be used for slip type joint assembly to fill voids up to 1/16 inch clearance.

G. Hangers

1. Strap: Steel, galvanized

2. Rod: Steel, galvanized; continuously threaded.

2.06 CONSTRUCTION

A. GALVANIZED STEEL RECTANGULAR DUCT

1. Single or double wall construction as indicated by application.

2. Minimum 26 gauge sheet metal thickness

3. Longitudinal seams complying with the following industry standards:

a. Inside Groove Seam

b. Sliding Seam

c. Pittsburgh Lock

d. Button-Punch Snap Lock

4. Transverse joints complying with the following industry standards:

a. Drive Slip

b. S Slip

c. Reinforced Bar-S Slip

d. Pocket Joint

e. Flanged Systems (Ductmate, MEZ, or equal) comprised of;

1) Rolled flanges with integral mastic seals

2) Bolted preformed corner pieces

3) Sealing gaskets

4) Flange joint drive cleats

5. Sealing Requirements

a. Class A – All transverse joints, longitudinal seams, and duct wall penetrations

b. Class B – All transverse joints and longitudinal seams

c. Class C – All transverse joints

6. except that all duct joints and longitudinal seams for all SMACNA classes of duct shall be sealed with U.L. Listed Hardcast DT-tape and sealant FTA-20.

B. GALVANIZED STEEL ROUND OR OVAL DUCT

1. Single or double wall construction as indicated by application.

2. Minimum 26 gauge sheet metal thickness

3. Longitudinal seams complying with the following industry standards:

a. Continuous interlocking spiral wound

b. Continuously seam welded

c. Butt seam welded

d. Gore locked seam

4. Transverse joints complying with the following industry standards:

a. Pipe & fitting coupled slip joint with radial fasteners

b. Swedge sleeve

c. Welded flanged & gasketed

C. WELDED LOW CARBON STEEL DUCT

1. Minimum 16 gauge thickness for grease laden exhaust service

2. Minimum 18 gauge thickness for services other than grease laden exhaust

3. Fully welded construction complying with one of the following industry standards

a. Shielded metal arc welding (SMAW)

b. Flux core arc welding (FCAW)

c. Gas metal arc welding (GMAW)

4. Fully welded longitudinal joints and transverse seams for grease laden kitchen exhaust applications.

5. Welded longitudinal seams with gasketed flanged transverse joints for applications other than grease laden kitchen exhaust.

D. WELDED STAINLESS STEEL DUCT

1. Minimum 16 gauge thickness for laboratory exhaust service

2. Minimum 18 gauge thickness for services other than laboratory exhaust

3. Welded construction complying with industry standard gas metal arc welding (GMAW)

4. Fully welded longitudinal joints and transverse seams with gasketed flanged connections at equipment connections only for laboratory exhaust applications.

5. Welded longitudinal seams with gasketed flanged transverse joints for applications other than labratory exhaust.

E. FLEXIBLE ROUND DUCT

1. Flexmaster type 5M insulated or equal.

2. Complant with NFPA 90A & 90B

3. U.L. 181 Class 1 listed

4. ASTM E96 Proceedure A rated for 0.05 Perm

5. Interlocking spiral wire of galvanized steel or aluminum construction

6. Aluminum foil, fiberglass, & aluminized polyester trilaminate liner

7. Rated to 6 inches WG positive and 1 inches WG negative

8. Insulated with 1" thick fiberglass insulation meeting R4.2

9. Reinforced metalized outer vapor barrier

F. DOUBLE WALL THERMAL DUCT FOR INTERIOR APPLICATIONS

1. Shop fabricated or factory prefabricated double wall duct systems consisting of continuous inner and outer wall metal duct sections with integral thermal insulation preinstalled in the annular space separating the inner and outer wall sections.

2. Reference Section 230713 HVAC Insulation, or other applicable Division 23 Sections for specific insulation requirements by application.

3. Paintable outer surface suitable for use in aesthetically exposed applications.

4. Comply with requirements of Galvanized Steel Rectangular, Round, and Oval Duct as applicable.

5. Provide double wall systems complete with all fittings, taps, and accessories.

G. DOUBLE WALL THERMAL DUCT FOR EXTERIOR EXPOSED APPLICATIONS

1. Shop fabricated or factory prefabricated double wall duct systems consisting of continuous inner and outer wall metal duct sections with integral thermal insulation preinstalled within the annular space separating the inner and outer wall sections.

2. Galvanized steel inner wall with welded stainless steel outer wall fabricated in flanged sections.

3. Reference Section 230713 HVAC Insulation, or other applicable Division 23 Sections for specific insulation requirements by application.

4. Inner duct wall complying with requirements of Galvanized Steel Rectangular, Round, and Oval Duct as applicable. Outer duct wall complying with requirements of Welded Stainless Steel Duct.

5. Provide double wall systems complete with all fittings, taps, and accessories.

H. DOUBLE WALL ACOUSTICAL DUCT

1. Shop fabricated or factory prefabricated double wall duct systems consisting of perforated inner and continuous outer wall metal duct sections with integral thermal acoustic insulation preinstalled in the annular space separating the inner and outer wall sections.

2. Provide inner duct with 3/32 inch diameter perforation holes staggered at 3/16 inch on center.

3. Reference Section 230713 HVAC Insulation, or other applicable Division 23 Sections for specific insulation requirements by application.

4. Paintable outer surface suitable for use in aesthetically exposed applications.

5. Conform to the requirements of galvanized steel rectangular, round, and oval duct as applicable.

6. Provide double wall systems complete with all fittings, taps, and accessories.

PART 3 - EXECUTION

3.01 GENERAL INSTALLATION REQUIREMENTS

A. Fabricate and support in accordance with SMACNA Duct Construction Standards and ASHRAE handbooks, except as indicated. Provide duct material, gages, reinforcing, and sealing for pressures indicated.

B. Size round ducts installed in place of rectangular ducts in accordance with ASHRAE table of equivalent rectangular and round ducts. No reduction of equivalent duct area is permitted except by reviewed shop drawings.

C. Locate ducts with sufficient space around equipment to allow normal operating and maintenance activities.

D. Construct duct fittings per SMACNA standard details.

1. Provide typical supply, return and exhaust duct as detailed by SMACNA Section II fittings and other construction.

2. The interior surface of all duct shall be smooth. No sheet metal parts, tabs, angles, or anything else may project into the ducts for any reason, except as specified to be so. All seams and joints shall be external.

3. Provide 90 degree elbows constructed in accordance with SMACNA Figure 2-2, style RE-1 radius elbow (center line radius = 1.5 times duct height or width), space permitting; or style RE-2 square throat with turning vanes (provide duct access panel up stream of turning vanes for cleaning purposes) where required.

4. Where rectangular elbows are used, provide single thickness turning vanes in accordance with SMACNA Figure 2.3; single wall type with trailing edge for duct velocities up to 1500 fpm and double wall turning vanes above 1500 fpm duct velocity.

5. Provide parallel flow branches constructed in accordance with SMACNA Figure 2-7.

6. Provide expanded 45 degree entry type rectangular duct branch connections.

7. Provide spin-in type round branch duct connections in accordance with SMACNA Figure 2-8.

8. Provide offsets and transitions in accordance with SMACNA Figure 2-9.

9. Provide round spin-in fittings with locking quadrant volume dampers for all round duct connections to rectangular ducts. Spin-in and flex duct shall be same size as air distribution device neck diameter. Secure flex duct to spin-in and air distribution device neck with stainless steel worm gear clamps and seal vapor barrier. Suspend flex duct from structure above; round and flexible duct installations shall be as detailed by SMACNA in section III round, oval and flexible duct. Flexible duct supports shall be constructed and installed in accordance with SMACNA figures 3-9 and 3-10.

10. Duct access doors shall be constructed in accordance with figure 2-12 and shall have a frame type 3, position 3 hinge with a type 2 locking handle; single and multi-blade volume dampers shall be in accordance with figures 2-14 and 2-15 respectively and shall have operator extensions when provided on externally insulated ducts; air distribution device connections shall be in accordance with figure 2-16 and ceiling diffuser branch ducts shall be in accordance with figure 2-17.

11. Rectangular duct connections at all air moving equipment shall be flexible neoprene fabric and installed in accordance with figure 2-19.

12. Increase duct sizes gradually, not exceeding 15 degrees divergence wherever possible. Divergence upstream of equipment shall not exceed 30 degrees; convergence downstream shall not exceed 45 degrees.

13. All duct shall be fabricated in a manner to prevent the seams or joints being cut for the installation of air distribution devices.

14. Provide crimps in direction of air flow where crimp joints with bead are used for joining round duct sizes 6 inch smaller.

E. Where required, provide ducts with "ESS"-drive joints or flat seams to allow crossing of duct or installation of other equipment or piping requiring tight clearances. Raise ducts where required to allow installation of other duct or equipment using 45 degree radius elbows (center line radius = 1.5 times duct height) to offset.

F. Provide openings in duct where required to accommodate thermometers and controllers. Provide pilot tube openings where required for testing of systems, complete with metal well and closure device to ensure against air leakage. Where openings are provided in insulated duct, install insulation material inside a metal ring.

G. Connect fan coil units to low pressure OA intake ducts with short length of flexible duct. Hold in place with corrosion resistant clamp or strap.

H. Connect air distribution devices to low pressure ducts with 6 feet maximum, 4 feet minimum, length of flexible duct. Hold in place with corrosion resistant strap or clamp.

I. All rectangular duct located exposed on roof shall have top horizontal surface "crowned or sloped" to prevent water from ponding.

3.02 DUCT APPLICATION SCHEDULE

A. Unless indicated otherwise, provide duct systems complying with the following application schedule:

AIR SYSTEM	CONSTRUCTION	MATERIAL	Pressure Class
Main Supply Above Ceiling or Concealed	Single Wall	Galvanized Steel	Per AHU ESP, 3” Class Minimum

Main Supply Exposed in Unoccupied Spaces	Single Wall	Galvanized Steel	Per AHU ESP, 3” Class Minimum
Main Supply Exposed in Occupied Spaces	Double Wall	Galvanized Steel	Per AHU ESP, 3” Class Minimum
Main Supply Exposed Exterior	Single Wall	Welded Carbon Steel	Per AHU ESP, 3” Class Minimum
Downstream Supply Above Ceiling or Concealed	Single Wall	Galvanized Steel	Per Terminal ESP
Downstream Supply Exposed in Occupied Spaces	Double Wall	Galvanized Steel	Per Terminal ESP
Draw-thru Transfer, Return, or Relief	Single Wall	Galvanized Steel	1” Class
Pressurized Transfer, Return, or Relief	Single Wall	Galvanized Steel	Per Fan ESP
Draw-thru O/A Intake Above Ceiling or Concealed	Single Wall	Galvanized Steel	1” Class
Draw-thru O/A Intake Exposed in Occupied Spaces	Double Wall	Galvanized Steel	1” Class
Pressurized O/A Intake Above Ceiling or Concealed	Single Wall	Galvanized Steel	Per Fan ESP, 2” Class Minimum
Pressurized O/A Intake Exposed in Occupied Spaces	Double Wall	Galvanized Steel	Per Fan ESP, 2” Class Minimum
General Exhaust	Single Wall	Galvanized Steel	Per Fan ESP, 1” Class Minimum
Grease Laden Kitchen Exhaust	Single Wall	Welded Carbon Steel	Per Fan ESP, comply with local code
Kitchen Dishwasher Exhaust	Single Wall	Welded Stainless Steel	Per Fan ESP, 18 Gauge Minimum
Laboratory Exhaust (General & Fume Hood)	Single Wall	Welded Stainless Steel	Per Fan ESP. 16 Gauge Minimum

3.03 DUCT HANGERS AND SUPPORTS

A. All duct shall be properly suspended or supported from the building structure.

B. The spacing, size and installation of hangers shall be in accordance with the recommendations of SMACNA, latest edition.

C. Hangers shall be galvanized steel straps or hot-dipped galvanized rod with threads pointed after installation. Hangers shall be attached to the bottom of the duct.

D. Provide double nuts and lock washers on threaded rod supports

E. All duct shall be mounted tight to underside of structure and shall be top level with bottom and side transitions only, except that allowance shall be made for duct to be externally insulated, which shall be mounted 3" below structural beams and joists or other obstruction to allow installation of the external duct insulation.

F. All duct risers shall be supported by angles or channels secured to the sides of the ducts at each floor. Secure floor supports to duct using rods, angles or flat bar to the duct joint or reinforcing. Provide miscellaneous steel supports for duct risers as required at no additional cost to owner.

G. Where ducts pass through walls in exposed areas, provide framed openings constructed of welded metal angles. All angles shall be carried around all four sides of the duct or group of ducts.

3.04 ADJUSTING AND CLEANING

A. Clean duct system by vacuuming and force air at high velocity through duct to remove accumulated dust. To obtain sufficient air, clean half the system at a time. Protect equipment which may be harmed by excessive dirt with temporary filters, or bypass during cleaning.

3.05 TESTING

A. Pressure test ductwork per Quality Control requirements.

END OF SECTION 23 31 13

23 33 00

DUCTWORK ACCESSORIES

PART 1 - GENERAL

1.01 RELATED DOCUMENTS

A. Drawings and general provisions of the Contract, including General and Supplementary Conditions and Division 01 Specification Sections, apply to this Section.

1.02 SUMMARY

A. Section Includes:

1. Backdraft and pressure relief dampers.
2. Barometric relief dampers.
3. Manual volume dampers.
4. Control dampers.
5. Fire dampers.
6. Duct-mounted access doors.
7. Flexible connectors.
8. Flexible ducts.
9. Duct accessory hardware.

B. RELATED SECTIONS:

1. Section 013300 Submittals.
2. Section 01524 Construction Waste Management
3. Section 01611 Environmental Management
4. Section 01570 Pollution Prevention and Control

1.03 SUBMITTALS

A. Product Data: For each type of product indicated.

1. For duct silencers, include pressure drop and dynamic insertion loss data. Include breakout noise calculations for high transmission loss casings.

B. Shop Drawings: For duct accessories. Include plans, elevations, sections, details and attachments to other work.

1. Detail duct accessories fabrication and installation in ducts and other construction. Include dimensions, weights, loads, and required clearances; and method of field assembly into duct systems and other construction. Include the following:

a. Special fittings.

b. Manual volume damper installations.

c. Control damper installations.

d. Fire-damper, smoke-damper, combination fire- and smoke-damper, ceiling, and corridor damper installations, including sleeves; and duct-mounted access doors and remote damper operators.

e. Duct security bars.

C. Coordination Drawings: Reflected ceiling plans, drawn to scale, on which ceiling-mounted access panels and access doors required for access to duct accessories are shown and coordinated with each other, using input from Installers of the items involved.

D. Source quality-control reports.

E. Operation and Maintenance Data: For air duct accessories to include in operation and maintenance manuals.

F. Product data. Unless otherwise indicated, submit the following for each type of product provided under work of this Section:

1. Recycled Content:

a. Indicate recycled content; indicate percentage of pre-consumer and post-consumer recycled content per unit of product.

2. Local/Regional Materials:

a. Indicate location of manufacturing facility; indicate distance between manufacturing facility and the project site.

b. Indicate location of extraction, harvesting, and recovery; indicate distance between extraction, harvesting, and recovery and the project site.

3. VOC data:

a. Submit manufacturer's product data for joint compounds. Indicate VOC and chemical component limits of the product. Submit MSDS highlighting VOC and chemical component limits. VOC contents and chemical component limits must be less than the limits of Green Seal’s Standard GS-11.

b. Submit manufacturer's certification that products comply with Green Seal's Standard GS-11

c. Submit environmental data in accordance with Table 1 of ASTM E2129 for products provided under work of this Section.

4. Submit the following according to Conditions of the Construction Contract.

a. Product data. Unless otherwise indicated, submit the following for each type of product provided under work of this Section:

1.04 QUALITY ASSURANCE

A. Comply with NFPA 90A, "Installation of Air Conditioning and Ventilating Systems," and with NFPA 90B, "Installation of Warm Air Heating and Air Conditioning Systems."

A. Comply with AMCA 500-D testing for damper rating.

1.05 EXTRA MATERIALS

A. Furnish extra materials that match products installed and that are packaged with protective covering for storage and identified with labels describing contents.

1. Fusible Links: Furnish quantity equal to 10 percent of amount installed.

PART 2 - PRODUCTS

2.01 ENVIRONMENTALLY PREFERABLE PRODUCTS

A. Provide environmentally preferable products to the greatest extent possible.

1. To the greatest extent possible, provide products and materials that promote stewardship of the earth's resources, promote good indoor environmental quality (IEQ), and promote efficiencies in operational performance.

B. Provide products listed on the EPA Comprehensive Procurement Guidelines to the greatest extent practicable.

C. Provide products listed on the USGBC Directory of Products and Services to the greatest extent possible.

2.02 RECYCLED CONTENT

A. Provide recycled content products to the greatest extent possible.

1. To the greatest extent possible, provide materials with recycled content such that the sum of post-consumer recycled content plus one-half of the post-industrial content constitutes at least 10% of the total value of the materials in the project.

2.03 REGIONAL MATERIALS

A. Provide Regional materials and products to the greatest extent possible that are extracted and manufactured within the region.

1. Provide materials and products that use a minimum of 20 % of building products that are manufactured regionally within a radius of 500 miles from the project site.

a. Manufacturing refers to the final assembly of components into the building product that is furnished and installed by the tradesman.

2. Of the regionally manufactured materials used and documented, use a minimum of 50% of building materials and products that are extracted, harvested or recovered (as well as manufactured) within 500 miles of the project site.

2. 1 MATERIALS

B. Comply with SMACNA's "HVAC Duct Construction Standards - Metal and Flexible" for acceptable materials, material thicknesses, and duct construction methods unless otherwise indicated. Sheet metal materials shall be free of pitting, seam marks, roller marks, stains, discolorations, and other imperfections.

C. Galvanized Sheet Steel: Comply with ASTM A 653/A 653M.

1. Galvanized Coating Designation: G90 (Z275).

2. Exposed-Surface Finish: Mill phosphatized.

D. Stainless-Steel Sheets: Comply with ASTM A 480/A 480M, Type 304, and having a No. 2 finish for concealed and exposed ducts.

E. Aluminum Sheets: Comply with ASTM B 209 (ASTM B 209M), Alloy 3003, Temper H14; with mill finish for concealed ducts and standard, 1-side bright finish for exposed ducts.

F. Extruded Aluminum: Comply with ASTM B 221 (ASTM B 221M), Alloy 6063, Temper T6.

G. Reinforcement Shapes and Plates: Galvanized-steel reinforcement where installed on galvanized sheet metal ducts; compatible materials for aluminum and stainless-steel ducts.

H. Tie Rods: Galvanized steel, 1/4-inch (6-mm) minimum diameter for lengths 36 inches (900 mm) or less; 3/8-inch (10-mm) minimum diameter for lengths longer than 36 inches (900 mm).

2. 2 BACKDRAFT AND PRESSURE RELIEF DAMPERS

A. Manufacturers: Subject to compliance with requirements, provide products by one of the following:

1. American Warming and Ventilating; a division of Mestek, Inc.

2. Greenheck Fan Corporation.

3. Nailor Industries Inc.

4. Pottorff; a division of PCI Industries, Inc.

5. Ruskin Company.

6. American Warming and Ventilating.

I. Description: Gravity balanced.

J. Maximum Air Velocity: 2000 fpm.

K. Maximum System Pressure: 2-inch wg.

L. Frame: 0.063-inch- thick extruded aluminum with welded corners and mounting flange.

M. Blades: Multiple single-piece blades, maximum 6-inch width, 0.025-inch- thick, roll-formed aluminum noncombustible with sealed edges.

N. Blade Action: Parallel.

O. Blade Seals: Neoprene, mechanically locked.

P. Blade Axles:

1. Material: Stainless steel.

2. Diameter: 0.20 inch.

Q. Tie Bars and Brackets: Galvanized steel.

R. Return Spring: Adjustable tension.

S. Bearings: Synthetic pivot bushings.

T. Accessories:

1. Adjustment device to permit setting for varying differential static pressure.

2. Counterweights and spring-assist kits for vertical airflow installations.

3. Electric actuators.

4. Chain pulls.

5. Screen Mounting: Front mounted in sleeve.

a. Sleeve Thickness: 20-gage minimum.

b. Sleeve Length: 6 inches minimum.

6. Screen Material: Aluminum.

7. Screen Type: Bird.

8. 90-degree stops.

2. 3 BAROMETRIC RELIEF DAMPERS

A. Manufacturers: Subject to compliance with requirements, provide products by one of the following:

9. Air Balance Inc.; a division of Mestek, Inc.

10. American Warming and Ventilating; a division of Mestek, Inc.

11. Greenheck Fan Corporation.

12. Lloyd Industries, Inc.

13. Nailor Industries Inc.

14. Pottorff; a division of PCI Industries, Inc.

15. Ruskin Company.

16. American Warming and Ventilating.

U. Suitable for horizontal or vertical mounting.

V. Maximum Air Velocity: 2000 fpm.

W. Maximum System Pressure: 2-inch wg.

X. Frame: 0.063-inch- (thick extruded aluminum], with welded corners and mounting flange.

Y. Blades:

1. Multiple, 0.025-inch-thick, roll-formed aluminum.

2. Maximum Width: 6 inches (150 mm).

3. Action: Parallel.

4. Balance: Gravity.

5. Eccentrically pivoted.

Z. Blade Seals: Neoprene.

AA. Blade Axles: Nonferrous metal.

BB. Tie Bars and Brackets:

1. Material: Aluminum

2. Rattle free with 90-degree stop.

CC. Return Spring: Adjustable tension.

DD. Bearings: Synthetic.

EE. Accessories:

1. Flange on intake.

2. Adjustment device to permit setting for varying differential static pressures.

2. 4 MANUAL VOLUME DAMPERS

A. Standard, Steel, Manual Volume Dampers:

3. Manufacturers: Subject to compliance with requirements, provide products by one of the following:

a. Air Balance Inc.; a division of Mestek, Inc.

b. American Warming and Ventilating; a division of Mestek, Inc.

c. McGill AirFlow LLC.

d. METALAIRE, Inc.

e. Nailor Industries Inc.

f. Pottorff; a division of PCI Industries, Inc.

g. Ruskin Company.

h. Trox USA Inc.

i. American Warming and Ventilating.

4. Standard leakage rating, with linkage outside air stream.

5. Suitable for horizontal or vertical applications.

6. Frames:

a. Hat-shaped, galvanized channels, 0.064-inch minimum thickness.

b. Mitered and welded corners.

c. Flanges for attaching to walls and flangeless frames for installing in ducts.

7. Blades:

a. Multiple or single blade.

b. Parallel- or opposed-blade design.

c. Stiffen damper blades for stability.

d. Galvanized, 0.064 inch thick.

8. Blade Axles: Nonferrous metal.

9. Bearings:

a. Oil-impregnated bronze.

b. Dampers in ducts with pressure classes of 3-inch wg or less shall have axles full length of damper blades and bearings at both ends of operating shaft.

10. Tie Bars and Brackets: Galvanized steel.

2. 5 FIRE DAMPERS

A. Manufacturers: Subject to compliance with requirements, [provide products by one of the following:

11. American Warming and Ventilating.

12. Greenheck Fan Corporation.

13. METALAIRE, Inc.

14. Nailor Industries Inc.

15. Pottorff; a division of PCI Industries, Inc.

16. Prefco; Perfect Air Control, Inc.

17. Ruskin Company.

FF. Type: Static; rated and labeled according to UL 555 by an NRTL.

GG. Closing rating in ducts up to 4-inch wg static pressure class and minimum4000-fpm velocity.

HH. Fire Rating: 1-1/2 hours.

II. Frame: Curtain type with blades outside air stream fabricated with roll-formed, 0.034-inch thick galvanized steel; with mitered and interlocking corners.

JJ. Mounting Sleeve: Factory- or field-installed, galvanized sheet steel.

1. Minimum Thickness: 0.052 or 0.138 inch thick, as indicated, and of length to suit application.

2. Exception: Omit sleeve where damper-frame width permits direct attachment of perimeter mounting angles on each side of wall or floor; thickness of damper frame must comply with sleeve requirements.

KK. Mounting Orientation: Vertical or horizontal as indicated.

LL. Blades: Roll-formed, interlocking, 0.034-inch- thick, galvanized sheet steel. In place of interlocking blades, use full-length, 0.034-inch- thick, galvanized-steel blade connectors.

MM. Horizontal Dampers: Include blade lock and stainless-steel closure spring.

NN. Heat-Responsive Device: Replaceable, 165 deg F rated, fusible links.

OO. Furnish and install where shown on the drawings or required by the Specifications, fire dampers meeting the following requirements.

PP. Each fire damper shall be constructed and tested in accordance with Underwriters Laboratories Safety Standard 555. All dampers shall possess a 1-1/2 hour or 3 hour (as appropriate for the construction shown in the architectural drawings) protection rating, 165 or 212 degree F fusible link, and shall bear a U.L. label in accordance with Underwriters Laboratories labeling procedures. Fire dampers shall be constructed such that the damper frame material and the curtain material shall be galvanized.

QQ. Fire dampers shall be curtain blade or multi-blade type and the damper shall be so constructed that the blades are either out of the air stream or installed in an oversized sleeve to provide a 100 percent free area of the duct in which the damper is housed.

RR. The damper manufacturer's literature submitted for approval prior to the installation shall include performance data developed from testing in accordance with AMCA 500 Standards and shall show the pressure drops for all sizes of dampers required at anticipated air flow rates. Maximum pressure drop through fire damper shall not exceed 0.05 inch water gauge.

SS. Fire dampers shall be equipped for vertical or horizontal installation as required by the locations shown in the drawings. Fire dampers shall be installed in wall and floor openings utilizing steel sleeves, angles and other material and practices required to provide an installation equivalent to that utilized by the manufacturer when the respective dampers were tested by Underwriters Laboratories. Mounting angles shall be a minimum of 1 1/2 inch by 1 1/2 inch by 14-gauge and bolted, tack welded or screwed to the sleeve at maximum spacings of 12 inches and with a minimum of two connections at all sides. Mounting angles shall overlap at least equal to the gauge of the duct defined by the appropriate SMACNA Duct Construction Standard, latest edition, and as described in NFPA 90A. The entire assembly, following installation, shall be capable of withstanding 6" water gauge static pressure.

TT. The damper installation shall be in accordance with the damper manufacturer's instructions.

UU. All fire dampers shall comply with the specification as written above and shall be Ruskin Model IBD2 (Style C, CR or CO), Greenheck Model FD-150 (Type C, CR or CO), or Pottorff.

VV. The contractor shall completely seal the assembly to the building components using Hardcast 1602 sealant tape to allow for expansion and contraction of the sleeve and damper assembly.

WW. Dampers shall be UL labeled for use in dynamic systems. Closure reading shall be 110% of the maximum design airflow at the point of installation. The minimum closure pressure rating shall be 8” wg for airflow in either direction.

XX. Combination Fire/Smoke Dampers

1. Furnish and install where shown on the Drawings, or as required by the Specifications, combination fire/smoke dampers meeting the following requirements.

2. Each combination fire/smoke damper shall be 1 1/2 hour fire rated under UL Standard 555, 4th Edition, and shall be further classified by Underwriters Laboratories as a Leakage Rated Damper for use in smoke control systems under the latest version of UL555S, and bear a UL label attesting to same. The damper manufacturer shall have tested, and qualified with UL, a complete range of damper sizes covering all dampers required by this Specification. Testing and UL qualifying a single damper size is not acceptable. The leakage rating under UL555S shall be no higher than Leakage Class I (4 cfm per square foot at one inch water gauge pressure and 8 cfm per square foot at 4 inches water gauge pressure). The maximum air pressure drop through each combination fire/smoke damper shall not exceed 0.10 inch water gauge at the design air quantity. (Note that this may require a larger damper than the connected duct size.)

3. The damper frame shall be a minimum of 20-gauge galvanized steel formed into a structural hat channel shape with tabbed corners for reinforcement, as approved in testing by Underwriters Laboratories. Bearings shall be integral high surface area non electrolytic materials construction to incorporate a friction free frame blade lap seal, or molybdenum disulfide impregnated stainless steel or bronze oilite sleeve type turning in an extruded hole in the frame or an extruded frame raceway. The dampers may be either parallel or opposed blade type. The blades shall be constructed with a minimum of 14-gauge equivalent thickness. The blade edge seal material shall be able to withstand 450 degrees F. The jamb seals shall be flexible stainless steel compression type or lap seal type.

4. In addition to the leakage ratings specified herein, the combination fire/smoke dampers and their operators shall be qualified under UL555S to an elevated temperature of 250 degrees F. Electric operators shall be installed by the damper manufacturer at the time of damper fabrication. The damper and operator shall be supplied as a single entity which meets all applicable UL555 and UL555S qualifications for both dampers and operators. The manufacturer shall provide a factory assembled sleeve. The sleeve shall be a minimum of either 20-gauge for dampers where neither width nor height exceeds 48 inches or 16-gauge where either dimension equals or exceeds 48 inches.

5. As part of the UL qualification, dampers shall have demonstrated a capacity to operate (open and close) under HVAC system operation conditions, with pressures of at least 4 inches water gauge in the closed position, and 2500 fpm air velocity in the open position.

6. Each combination fire/smoke damper shall be equipped with a UL Classified Firestat /releasing device. The firestat/releasing device shall electrically and mechanically lock the damper in a closed position when the duct temperatures exceed 165 degrees F and still allow the appropriate authority to operate the damper as may be required for smoke control functions. The damper must be operable while the temperature is above 250 degrees F. The actuator/operator package shall include two damper position indicator

switches linked directly to damper blade to provide capability of remotely indicating damper position. One switch shall close when the damper is fully open, and the other switch shall close when the damper is fully closed. The Firestat/releasing device and position indicator switches shall be capable of interfacing electrically with the smoke detectors, building fire alarm systems, and remote indicating/control stations.

7. The damper releasing device shall be mounted within the airstream. The device shall be activated and the damper shall close and lock when subjected to duct temperatures in excess of approximately 285 degrees F.

8. Motors for operation of smoke dampers shall be smoke system fail safe, spring return normally open supplies and normally closed returns, or as indicated in the plans, and shall be furnished and installed by the damper manufacturer as required by the U.L. rating mentioned above. Motors shall be electric or pneumatic to match the type of temperature control system specified elsewhere in this specification. All required relays, EP switches, wiring piping and other labor and material necessary to completely interconnect the smoke detector system shall be furnished by the Contractor.

9. Each damper shall be furnished in a square or rectangular configuration. The Contractor shall furnish and install sleeves manufactured by the approved damper manufacturer for each damper. The sleeves shall be constructed with square or rectangular to square, rectangular, round, or oval adapters as required. Dampers shall be installed in the sleeves in accordance with manufacturers U.L. installation instructions. The entire assembly, following installation, shall be capable of withstanding 6" W.G. static pressure.

10. All combination fire/smoke dampers shall comply with the specification as written above and shall be Ruskin Model FSD-60, Greenheck Model FSD-33, or Pottorff.

11. The contractor shall completely seal the assembly to the building components using Hardcast 1602 sealant tape to allow for expansion and contraction of the sleeve and damper assembly.

12. Dampers shall be UL labeled for use in dynamic systems. Closure reading shall be 110% of the maximum design air flow at the point of installation. The minimum closure pressure rating shall be 8” wg for air flow in either direction.

2. 6 DUCT-MOUNTED ACCESS DOORS

A. Manufacturers: Subject to compliance with requirements, provide products by one of the following:

13. American Warming and Ventilating; a division of Mestek, Inc.

14. Flexmaster U.S.A., Inc.

15. Greenheck Fan Corporation.

16. McGill AirFlow LLC.

17. Nailor Industries Inc.

18. Pottorff; a division of PCI Industries, Inc.

19. Ward Industries, Inc.; a division of Hart & Cooley, Inc.

YY. Duct-Mounted Access Doors: Fabricate access panels according to SMACNA's "HVAC Duct Construction Standards - Metal and Flexible"; Figures 2-10, "Duct Access Doors and Panels," and 2-11, "Access Panels - Round Duct."

1. Door:

   a. Double wall, rectangular.

   b. Galvanized sheet metal with insulation fill and thickness as indicated for duct pressure class.

   c. Vision panel.

   d. Hinges and Latches: 1-by-1-inch butt or piano hinge and cam latches.

   e. Fabricate doors airtight and suitable for duct pressure class.

2. Frame: Galvanized sheet steel, with bend-over tabs and foam gaskets.

3. Number of Hinges and Locks:

   a. Access Doors Less Than 12 Inches Square: No hinges and two sash locks.

   b. Access Doors up to 18 Inches Square: Two hinges and two sash locks.

   c. Access Doors up to 24 by 48 Inches: Three hinges and two compression latches. Access Doors Larger Than 24 by 48 Inches: Four hinges and two compression latches with outside and inside handles.

ZZ. Pressure Relief Access Door:

1. Door and Frame Material: Galvanized sheet steel.

2. Door: Double wall with insulation fill with metal thickness applicable for duct pressure class.

3. Operation: Open outward for positive-pressure ducts and inward for negative-pressure ducts.

4. Factory set at 10-inch wg.

5. Doors close when pressures are within set-point range.

6. Hinge: Continuous piano.

7. Latches: Cam.

8. Seal: Neoprene or foam rubber.

9. Insulation Fill: 1-inch thick, fibrous-glass or polystyrene-foam board.

2. 7 FLEXIBLE DUCTS

A. Manufacturers: Subject to compliance with requirements, provide products by one of the following:

10. Flexmaster U.S.A., Inc.

11. McGill AirFlow LLC.

12. Ward Industries, Inc.; a division of Hart & Cooley, Inc.

AAA. Insulated, Flexible Duct: UL 181, Class 1, 2-ply vinyl film supported by helically wound, spring-steel wire; fibrous-glass insulation; aluminized vapor-barrier film.

1. Pressure Rating: 10-inch wg positive and 1.0-inch wg negative.

2. Maximum Air Velocity: 4000 fpm.

3. Temperature Range: Minus 10 to plus 160 deg F.

4. Insulation R-value: Comply with ASHRAE/IESNA 90.1-2004.

BBB. Insulated, Flexible Duct: UL 181, Class 1, multiple layers of aluminum laminate supported by helically wound, spring-steel wire; fibrous-glass insulation; aluminized vapor-barrier film.

1. Pressure Rating: 10-inch wg positive and 1.0-inch wg negative.

2. Maximum Air Velocity: 4000 fpm.

3. Temperature Range: Minus 20 to plus 210 deg F.

4. Insulation R-value: Comply with ASHRAE/IESNA 90.1-2004.

CCC. Flexible Duct Connectors:

1. Clamps: Stainless-steel band with cadmium-plated hex screw to tighten band with a worm-gear actionin sizes 3 through 18 inches to suit duct size.

2. Non-Clamp Connectors: Adhesive plus sheet metal screws.

2. 8 DUCT ACCESSORY HARDWARE

A. Instrument Test Holes: Cast iron or cast aluminum to suit duct material, including screw cap and gasket. Size to allow insertion of pitot tube and other testing instruments and of length to suit duct-insulation thickness.

DDD. Adhesives: High strength, quick setting, neoprene based, waterproof, and resistant to gasoline and grease.

2. 9 LOW PRESSURE TAPS (CONICAL BELL MOUTH FITTINGS)

A. Conical fittings may be used for duct taps and shall include quadrant dampers on all lines to air devices (diffusers and grilles), even though a volume damper is specified for the air device. (This does not apply to medium pressure duct.) Spin-in fittings shall be sealed at the duct tap with a gasket, or compression fit, or sealed with sealant specified for medium pressure ductwork. The location of spin-in fittings in the ducts shall be determined after dual or single duct terminal units are hung or the location of the light fixtures is known so as to minimize flexible duct lengths and sharp bends.

EEE. The conical fitting shall be made of at least 26-gauge galvanized sheet metal. The construction to be a two-piece fitting with a minimum overall length of 6 inches and shall be factory sealed for high pressure requirements. Average loss coefficient for sizes 6, 8, and 10 shall be less than 0.055.

FFF. Each to be provided with minimum 24-gauge damper plate with locking quadrant operator and sealed end bearings. Damper blade shall be securely attached to shaft to prevent damper from rotating around shaft.

GGG. Provide flange and gasket with adhesive peel-back paper for ease of application. The fitting shall be further secured by sheet metal screws spaced evenly at no more than 4 inches on-center with a minimum of four screws per fitting.

HHH. The conical bellmouth fitting shall be Series 3000G as manufactured by Flexmaster U.S.A., Inc., or Buckley Air Products, Inc., 'AIR-TITE'.

PART 3 - EXECUTION

3. 1 INSTALLATION

A. Install duct accessories according to applicable details in SMACNA's "HVAC Duct Construction Standards - Metal and Flexible" for metal ducts and in NAIMA AH116, "Fibrous Glass Duct Construction Standards," for fibrous-glass ducts.

B. Install duct accessories of materials suited to duct materials; use galvanized-steel accessories in galvanized-steel and fibrous-glass ducts, stainless-steel accessories in stainless-steel ducts, and aluminum accessories in aluminum ducts.

3. 2 DAMPERS

A. Furnish and install dampers where shown on the Drawings and wherever necessary for complete control of the air flow, including all supply, return and exhaust branches, "division" in main supply, return and exhaust ducts, each individual air supply outlet and fresh air ducts. Where access to dampers through a fixed suspended ceiling is necessary, the Contractor shall be responsible for the proper location of the access doors.

C. Splitter dampers shall be fabricated of steel not lighter than 16-gauge. The leading edge of the damper shall be hemmed. Each splitter shall be a minimum of 12" long or 1-1/2 times the width of the smaller of the two branches it controls, whichever is greater. Dampers shall be carefully fitted, and shall be controlled by locking quadrants equal to Ventlok No. 555 on exposed uninsulated ductwork, No. 644 on exposed externally insulated ductwork and No. 677 (2-5/8" diameter) chromium plated cover plate for concealed ductwork not above lay-in accessible ceilings. Furnish and install end bearings for the damper rods on the end opposite the quadrant when No. 555 or No. 644 regulators are used, and on both ends when No. 677 regulators are used.

D. On concealed ductwork above lay-in accessible ceilings use Ventlok No. 555 or No. 644 locking quadrant for splitter dampers.

E. Dampers larger than three (3) square feet in area shall be controlled by means of rods hinged near the leading edge of the damper with provisions for firmly anchoring the rod and with end bearings supporting the axle.

F. Volume dampers shall be equal to those of American Foundry. Blades shall not exceed 48 inches (48") in length or twelve inches (12") in width and shall be of the opposed interlocking type. The blades shall be of not less than No. 16-gauge galvanized steel supported on one-half inch (1/2") diameter rust-proofed axles. Axle bearings shall be the self-lubricating ferrule type.

G. Install all dampers furnished by the Temperature Control Manufacturer in strict accordance with the manufacturer's recommendations and requirements of these Specifications.

H. All adjustable dampers installed in externally insulated ductwork shall be installed with Ventlok No. 639, or equal, elevated dial operators. Insulation shall extend under the elevated dial. All adjustable dampers installed in internally insulated ductwork shall be installed with Ventlok No. 635, or equal, dial operators. All damper shaft penetrations in the ductwork shall be installed with Ventlok #609 end bearings.

I. Install volume dampers at points on supply, return, and exhaust systems where branches extend from larger ducts. Where dampers are installed in ducts having duct liner, install dampers with hat channels of same depth as liner, and terminate liner with nosing at hat channel.

    1. Install steel volume dampers in steel ducts.

    2. Install aluminum volume dampers in aluminum ducts.

J. Set dampers to fully open position before testing, adjusting, and balancing.

K. Install test holes at fan inlets and outlets and elsewhere as indicated.

L. Install fire dampers according to UL listing.

M. Install duct access doors on sides of ducts to allow for inspecting, adjusting, and maintaining accessories and equipment at the following locations:

    1. On both sides of duct coils.

    2. Upstream from duct filters.

    3. At outdoor-air intakes and mixed-air plenums.

4. At drain pans and seals.

5. Downstream from manual volume dampers, control dampers, backdraft dampers, and equipment.

6. Adjacent to and close enough to fire or smoke dampers, to reset or reinstall fusible links. Access doors for access to fire or smoke dampers having fusible links shall be pressure relief access doors and shall be outward operation for access doors installed upstream from dampers and inward operation for access doors installed downstream from dampers.

7. At each change in direction and at maximum 50-foot spacing.

8. Upstream and downstream from turning vanes.

9. Upstream or downstream from duct silencers.

10. Control devices requiring inspection.

11. Elsewhere as indicated.

N. Install access doors with swing against duct static pressure.

3. 3 FIELD QUALITY CONTROL

A. Tests and Inspections:

1. Operate dampers to verify full range of movement.

2. Inspect locations of access doors and verify that purpose of access door can be performed.

3. Operate fire, smoke, and combination fire and smoke dampers to verify full range of movement and verify that proper heat-response device is installed.

4. Inspect turning vanes for proper and secure installation.

5. Operate remote damper operators to verify full range of movement of operator and damper.

END OF SECTION 23 33 00

23 34 16

FANS

PART 1 - GENERAL

1.01 SECTION INCLUDES

A. Furnish and install roof and wall exhausters and cabinet and ceiling exhaust fans for mechanical systems.

1.02 RELATED SECTIONS

A. Section 016600 – Product Storage and Handling Requirements.

B. Section 016613 – Product Storage and Handling Requirements for Hazardous Materials.

C. Section 016616 – Product Storage and Handling Requirements for Toxic Materials.

D. Section 220526 – Hangers and Supports for Plumbing Piping and Equipment.

E. Section 220543 – Vibration and Seismic Control for Plumbing and Piping Equipment.

F. Section 233100 – HVAC Ducts and Casings.

G. Section 233416 – Centrifugal HVAC Fans.

H. Section 230593 – Testing, Adjusting, and Balancing for HVAC.

I. Section 230513 – Common Motor Requirements for HVAC.

J. Coordinate with Commissioning Requirements indicated in Section 019113. This contractor is responsible to comply with all requirements for the above section.

K. Section 013300 Submittals.

L. Section 01524 Construction Waste Management

M. Section 01611 Environmental Management

N. Section 01570 Pollution Prevention and Control

1.03 REFERENCES

A. AMCA 99 – Standards Handbook.

B. AMCA 210 – Laboratory Methods of Testing Fans for Rating Purposes.

C. AMCA 300 – Test Code for Sound Rating Air Moving Devices.

D. AMCA 301 – Method of Publishing Sound Ratings for Air Moving Devices.

E. SMACNA – Low Pressure Duct Construction Standard.

1.04 SUBMITTALS

A. Include fan curves with specified operating point clearly plotted.

B. Include sound power levels for both fan inlet and outlet at rated capacity.

C. Indicate special coating when required.

D. Provide operation and maintenance manual.

E. Operation and Maintenance Data: For centrifugal fans to include in emergency, operation, and maintenance manuals.

F. Product data. Unless otherwise indicated, submit the following for each type of product provided under work of this Section:

1. Recycled Content:

   a. Indicate recycled content; indicate percentage of pre-consumer and post-consumer recycled content per unit of product.

2. Local/Regional Materials:

   a. Indicate location of manufacturing facility; indicate distance between manufacturing facility and the project site.

   b. Indicate location of extraction, harvesting, and recovery; indicate distance between extraction, harvesting, and recovery and the project site.

3. VOC data:

   a. Submit manufacturer's product data for joint compounds. Indicate VOC and chemical component limits of the product. Submit MSDS highlighting VOC and chemical component limits. VOC contents and chemical component limits must be less than the limits of Green Seal’s Standard GS-11.

   b. Submit manufacturer’s certification that products comply with Green Seal’s Standard GS-11

   c. Submit environmental data in accordance with Table 1 of ASTM E2129 for products provided under work of this Section.

4. Submit the following according to Conditions of the Construction Contract.

   a. Product data. Unless otherwise indicated, submit the following for each type of product provided under work of this Section:

1.05 QUALITY ASSURANCE

A. Performance Ratings: Conform to AMCA 210 and bear the AMCA Certified Rating Seal.

B. Sound Ratings: AMCA 301, tested to AMCA 300.

C. Fabrication: Conform to AMCA 99.

1.06 MAINTENANCE

A. Provide twelve (12) months maintenance of all materials and equipment under this section. Cost of the twelve (12) month normal and preventive maintenance shall be included within this scope of work.

PART 2 - PRODUCTS

2.01 ENVIRONMENTALLY PREFERABLE PRODUCTS

A. Provide environmentally preferable products to the greatest extent possible.

1. To the greatest extent possible, provide products and materials that promote stewardship of the earth's resources, promote good indoor environmental quality (IEQ), and promote efficiencies in operational performance.

B. Provide products listed on the EPA Comprehensive Procurement Guidelines to the greatest extent practicable.

C. Provide products listed on the USGBC Directory of Products and Services to the greatest extent possible.

2.02 RECYCLED CONTENT

A. Provide recycled content products to the greatest extent possible.

1. To the greatest extent possible, provide materials with recycled content such that the sum of post-consumer recycled content plus one-half of the post-industrial content constitutes at least 10% of the total value of the materials in the project.

2.03 REGIONAL MATERIALS

A. Provide Regional materials and products to the greatest extent possible that are extracted and manufactured within the region.

1. Provide materials and products that use a minimum of 20 % of building products that are manufactured regionally within a radius of 500 miles from the project site.

a. Manufacturing refers to the final assembly of components into the building product that is furnished and installed by the tradesman.

2. Of the regionally manufactured materials used and documented, use a minimum of 50% of building materials and products that are extracted, harvested or recovered (as well as manufactured) within 500 miles of the project site.

2.04 MANUFACTURERS

A. Greenheck.

B. Cook.

C. Penn Barry

D. Acme

2.05 ROOF EXHAUSTERS

A. Centrifugal or Axial Fan Unit: Backward inclined or airfoil design, v-belt or direct driven, with spun aluminum housing, resilient mounted motor and drive assembly, 1/2-inch mesh, 16 gauge aluminum bird screen; square base to suit roof curb with continues curb gaskets; secured to roof curb with cadmium plated or stainless steel bolts and screws, as indicated in Drawings.

B. Roof Curb: 14 inch with continuously welded seams, built-in cant strip, 1 inch insulation and curb bottom, hinged curb adapter sand factory installed door mailer strip. Where scheduled, provide interior baffle with acoustic insulation and increase curb height as required.

C. Disconnect Switch: Factory wired, non-fusible, in housing for thermal overload protected motor.

D. Back draft Damper: Gravity activated, aluminum multiple blade construction, felt edged with nylon bearings.

E. Sheaves: Cast-iron or steel, dynamically balanced, bored to fit shafts and keyed; adjustable pitch motor sheave selected so required rpm is obtained with sheaves set at mid position; and will not overload motor when adjusted to maximum pitch; fan shaft with self-aligning pre-lubricated ball bearings.

F. Apply three coats of air dried Heresite coating both internal and external to all roof exhausters from corrosive areas.

G. Motors: In total compliance with Section 230513.

2.06 UP-BLASTS EXHAUST FANS

A. Centrifugal Fan Unit: Non-overloading backward inclined or airfoil design, v-belt driven, with spun aluminum housing, resilient mounted motor and drive assembly located out of airstream; square base to suit roof curb with continues curb gaskets; secured with cadmium plated or stainless steel bolts and screws.

B. Motor enclosures: Totally enclosed fan cooled

1. Motors are heavy duty ball bearing type to match with the fan load and furnished at the specific voltage and phase.

2. Mounted on vibration isolators, out of the airstream

3. For motor cooling there shall be fresh air drawn into the motor compartment through an area free of discharge contaminants.

4. Accessible for maintenance.

C. Shafts and Bearings:
- Fan shaft shall be ground and polished solid steel with an anti corrosive coating.
- Permanently sealed bearings or pillow block ball bearings.
- Bearing shall be selected for a minimum L10 life in excess of 100,000 hours (equivalent to L50 average life of 500,000 hours), at maximum cataloged operating speed.
- Bearings are 100 percent factory tested
- Fan Shaft first critical speed is at least 25 percent over maximum operating speed

D. Roof Curb: 14 inch high aluminum construction with continuous seams, built-in cant strip and factory installed mailer strip. Roof curb shall match fan and shall be supplied by fan manufacturer. Provide sloped roof curb as required for installed equipment to set level.

E. Disconnect Switch: Factory wired, non-fusible, in housing for thermal overload protected motor.

F. Grease Collector: Provide grease trough and collectors for kitchen hood fans.

G. Sheaves: Cast-iron or steel, dynamically balanced, bored to fit shafts and keyed; adjustable pitch motor sheave selected so required rpm is obtained with sheaves set at mid position; and will not overload motor when adjusted to maximum pitch; fan shaft with self-aligning pre-lubricated ball bearings. Drive shall be designed for 165% of rated horsepower capabilities.

H. Motors: In total compliance with Section 230513.

2.07 KITCHEN SUPPLY AIR FAN

A. Kitchen Supply Fan shall be as manufactured by Greenheck or approved equal provided all specifications are met. Greenheck Model KSF equipment is used as the basis of design.

B. Unit shall be of internal frame type construction of galvanized steel. All frames and panels shall be G90 galvanized steel. All metal-to-metal surfaces exposed to the weather shall be sealed, requiring no caulking at job site. Unit base to be designed for curb mounting. Unit base shall over hang the curb. Curb is recessed under the unit for a positive seal against water run-off. All components shall be easily accessible through removable doors. Permatector corrosion resistant exterior finish available for outdoor units.

C. Weather hood shall be the same finish as the unit and shall be sized for low intake velocities, preventing entrainment of moisture.

D. Filters shall be mounted in a straight or V-bank arrangement such that velocities across the filters do not exceed 550 feet per minute. Filters shall be 1 inch or 2 inch aluminum mesh and easily removable.

E. Centrifugal fans shall be double width, double inlet. Fan and motor shall be mounted on a common base and shall be internally isolated. All blower wheels shall be statically and dynamically balanced. Ground and polished steel fan shafts shall be mounted in permanently sealed ball bearing pillow blocks. Bearings shall be selected for a minimum (L10) life in excess of 100,000 hours at maximum cataloged speeds.

F. Motors shall be energy efficient, complying with EPACT standards, for single speed ODP and TE enclosures. Motors shall be permanently lubricated, heavy duty type, matched to the fan load and furnished at the specified voltage, phase and enclosure. Drives shall be sized for a minimum of 150% of driven horsepower. Pulleys shall be fully machined cast, 10 horse power and less shall be supplied with an adjustable drive pulley.

G. Control center shall include magnetic motor starter with thermal overload protection and manual reset, control circuit fusing, control transformer for 24 VAC circuit, integral door interlocking disconnect switch and distribution terminal strip. All internal electrical components shall be prewired for single point power connection. All electrical components shall be UL listed, approved or classified where applicable and wired in compliance with the National Electrical Code. Contactors and Class 20 adjustable overload protection shall be standard.

2.08 SOURCE QUALITY CONTROL

A. The following tests must be conducted at the project site.

1. Vibration test as described in Section 016600 – Product Storage and Handling Requirements, Section 016613 – Product Storage and Handling Requirements for Hazardous Materials, and Section 016616 – Product Storage and Handling Requirements for Toxic Materials.

B. The following listed tests must be conducted at the manufacturer=s test facility.

1. Vibration test as described in Section 230593 – Testing, Adjusting, and Balancing for HVAC.

2. Sound test under AMCA Guidelines and Conditions. The sound power levels must not exceed those indicated on Drawings.

2.09 FUME HOOD MIXED-FLOW INDUCED DILUTION FANS (GREENHECK, COOK OR EQUAL)

A. Impellers shall be mounted directly to the motor shaft to provide a direct drive arrangement 4 type fan. Motors shall be isolated from the primary exhaust air stream and shall be visible and accessible from the fan exterior for inspection and service.

B. Mixed flow impellers shall consist of combination axial/backward curved blades and shall be of welded steel construction. The impellers shall have non-stall and non-overloading performance characteristics with stable operation at any point on the fan curves.

C. Stationary discharge guide vane sections shall be provided to increase fan efficiencies.

D. Fan dynamic balance not to exceed 0.5 mil., peak to peak, at the blade pass area when operating at fan frequency. Vibration isolation shall be limited to rubber-in-shear pad type isolators.

E. Fan assemblies shall be designed for mounting on conventional roof curb without the need for guy wire supports.

F. Discharges shall include twin FRP nozzles with passive third central stacks that are capable of generating aspiration. The FRP shall be chemically and UV resistant.

G. Steel entrainment wind bands shall provide secondary induction of outside air. Induction shall take place downstream of the fan impeller and shall not influence BHP or static pressure requirements. Wind bands shall discharge up to 270% of the design flow rates. The manufacturer shall publish discharge volumes for all fans at specified primary exhaust flow.

H. A non-ferrous inlet bell shall be provided in order to reduce sparking in the event of a motor bearing failure.

I. Fans shall be modular construction and capable of being assembled on the roof.

J. PTFE gaskets shall be provided at all companion flanged joints.

K. Fasteners shall be 316 stainless steel.

L. A bolted access door shall be provided for impeller inspection on each fan.

M. Fans and accessories shall have internal drain systems to prevent rain water from entering building duct systems.

N. Electric motors shall be TEFC Mill & Chemical duty with a 1.15 service factor and an L-50 bearing life of 200,000 hours. Motors shall have sealed bearings up through a 256T NEMA frame. Motors on BS-1 and larger fans shall be C-Face and foot mounted.

O. A NEMA 3R non-fused disconnect switch shall be provided, mounted and wired to the motor.

P. Coatings-All steel and aluminum surfaces shall prepared for coating by blasting or chemical etching. Coating will be:

1. Epoxy (4-5 mils) for protection against weather and dry chemical fumes.
2. Epoxy (8-10 mils) for protection against weather, chemical vapors and splashes.

2.10 ACCESSORIES

A. Inlet mixing plenums shall be provided by the fan manufacturer. Each plenum shall be sized to support the weight and performance requirements of the number of fans listed on the schedule. Multiple fan plenums shall be double wall construction with structural stiffeners or shall be continuously welded, heavy gauge single wall construction. Single fan plenums shall be of continuously welded, heavy gauge steel construction. All plenums shall be capable of supporting the fan(s) without guy wires or supports. The plenums shall include hinged access doors and safety screens over primary air inlets. The primary air inlets shall be located on the bottom or side as noted on construction drawings. Coatings shall be the same as specified for the fans. Unless otherwise specified, plenums shall be suitable for mounting on roof curbs.

B. Stainless safety screens shall be supplied over bottom primary air inlets.

C. Bypass dampers shall be provided with all mixing plenums for outside make-up air with primary exhaust. Dampers will be:

1. Louver/damper combinations, aluminum construction, manual locking quadrant.

2. Opposed blade low leakage airfoil control dampers with extended shaft for connection to an operator. The dampers shall be aluminum construction. Rain hoods shall be provided with each damper. The dampers shall be controlled by a (hand quadrant/20 psi pneumatic/24V electric) operators. The operators shall be provided by controls manufacturer.

3. Barometric controlled dampers, adjustable up to 3.0” pressure. Rain hood shall be provided with each damper.

D. Low leakage isolation dampers shall be constructed of aluminum airfoil extrusions and coated with epoxy. Operators shall be 2 position, spring return and shall be 20 PSI pneumatic/24V/110V electric unless variable frequency drives are specified. The electric operator shall be factory wired (via a transformer when required) to the fan disconnect switch to open when the fan is energized and close via a spring return when de-energized. When the fan ships separate from the plenum, all wiring and conduit shall be factory supplied for easy connection in the field.

E. Vortex breakers shall be provided on all side inlet and multiple fan plenums.

F. Inlet spray nozzle(s) shall be mounted at fan inlet to provide wash down capability of fan while operating. Spray nozzles to be suitable for water or stream. Nozzles to be piped to the exterior of the fan with threaded end for field connection. All piping and nozzle components shall be stainless steel construction.

G. A 14 gauge galvanized steel roof curb shall be provided to support the fans/plenums. The curb shall be minimum 14 gauge and canted for rigid in wind loads. The curb shall be _” high. The curb shall include a rigid fiberglass liner wood nailer.

PART 3 - EXECUTION

3.01 INSTALLATION

A. Install in accordance with manufacturer’s instructions.

B. Secure roof exhausters with 1/2" x 2” S.S. lag screws roof curb.

C. Install flexible ductwork connections when fan connects to ductwork.

D. Provide al ventilating and exhaust fans with integral vibration isolation.

E. Water test ventilators after installation.

3.02 PAINTING

A. Duct installation and connection requirements are specified in other Division 23 Sections. Drawings indicate general arrangement of ducts and duct accessories. Make final duct connections with flexible connectors. Flexible connectors are specified in Division 23 Section "Air Duct Accessories."

B. Install ducts adjacent to fans to allow service and maintenance.

C. Install line-sized piping from scroll drain connection, with trap with seal equal to 1.5 times specified static pressure, to nearest floor drain.

D. Ground equipment according to Division 26 Section "Grounding and Bonding for Electrical Systems."

E. Connect wiring according to Division 26 Section "Low-Voltage Electrical Power Conductors and Cables."

3.03 FIELD QUALITY CONTROL

A. Provide equipment with factory finish in accordance with the manufacturer's standards. Touch scratches and marks from handling and installation with masking enamel to match manufacturer's color.

B. Where exhaust fans are required to have Heresite coating, have units factory finished with required number of coats prior to shipping to the job site.

END OF SECTION 23 34 16

23 37 13

DIFFUSERS, REGISTERS, AND GRILLES

PART 1 - GENERAL

1.01 RELATED DOCUMENTS

A. Drawings and general provisions of the Contract, including General and Supplementary Conditions and Division 01 Specification Sections, apply to this Section.

1.02 SUMMARY

A. Section Includes:

1. Round ceiling diffusers.
2. Rectangular and square ceiling diffusers.
3. Perforated diffusers.
4. Louver face diffusers.
5. Jet flow diffusers.
6. Linear slot diffusers.
7. Related Sections:
8. Division 08 Section "Louvers and Vents" for fixed and adjustable louvers and wall vents, whether or not they are connected to ducts.
9. Division 23 Section "Air Duct Accessories" for fire and smoke dampers and volume-control dampers not integral to diffusers, registers, and grilles.

B. Related Sections:

1. Section 013300 Submittals.
2. Section 01524 Construction Waste Management
3. Section 01352 LEED Requirements
4. Section 01611 Environmental Management
5. Section 01570 Pollution Prevention and Control

1.03 SUBMITTALS

A. First three paragraphs below are defined in Division 01 Section "Submittal Procedures" as "Action Submittals."

B. Product Data: For each type of product indicated, include the following:

1. Data Sheet: Indicate materials of construction, finish, and mounting details; and performance data including throw and drop, static-pressure drop, and noise ratings.

2. Diffuser, Register, and Grille Schedule: Indicate drawing designation, room location, quantity, model number, size, and accessories furnished.

C. Samples for Initial Selection: For diffusers, registers, and grilles with factory-applied color finishes.

D. Samples for Verification: For diffusers, registers, and grilles, in manufacturer's standard sizes to verify color selected.

E. Coordination Drawings: Reflected ceiling plans, drawn to scale, on which the following items are shown and coordinated with each other, using input from Installers of the items involved:

1. Ceiling suspension assembly members.

2. Method of attaching hangers to building structure.

3. Size and location of initial access modules for acoustical tile.

4. Ceiling-mounted items including lighting fixtures, diffusers, grilles, speakers, sprinklers, access panels, and special moldings.

5. Duct access panels.

F. Source quality-control reports.

G. Product data. Unless otherwise indicated, submit the following for each type of product provided under work of this Section:

1. Recycled Content:

a. Indicate recycled content; indicate percentage of pre-consumer and post-consumer recycled content per unit of product.

2. Local/Regional Materials:

a. Indicate location of manufacturing facility; indicate distance between manufacturing facility and the project site.

b. Indicate location of extraction, harvesting, and recovery; indicate distance between extraction, harvesting, and recovery and the project site.

3. VOC data:

a. Submit manufacturer's product data for joint compounds. Indicate VOC and chemical component limits of the product. Submit MSDS highlighting VOC and chemical component limits. VOC contents and chemical component limits must be less than the limits of Green Seal's Standard GS-11.

b. Submit manufacturer's certification that products comply with Green Seal's Standard GS-11

c. Submit environmental data in accordance with Table 1 of ASTM E2129 for products provided under work of this Section.

4. Submit the following according to Conditions of the Construction Contract.

a. Product data. Unless otherwise indicated, submit the following for each type of product provided under work of this Section:

PART 2 - PRODUCTS - REFER TO DRAWINGS FOR SCHEDULE.

2.01 ENVIRONMENTALLY PREFERABLE PRODUCTS

A. Provide environmentally preferable products to the greatest extent possible.

1. To the greatest extent possible, provide products and materials that promote stewardship of the earth's resources, promote good indoor environmental quality (IEQ), and promote efficiencies in operational performance.

B. Provide products listed on the EPA Comprehensive Procurement Guidelines to the greatest extent practicable.

C. Provide products listed on the USGBC Directory of Products and Services to the greatest extent possible.

2.02 RECYCLED CONTENT

A. Provide recycled content products to the greatest extent possible.

1. To the greatest extent possible, provide materials with recycled content such that the sum of post-consumer recycled content plus one-half of the post-industrial content constitutes at least 10% of the total value of the materials in the project.

2.03 REGIONAL MATERIALS

A. Provide Regional materials and products to the greatest extent possible that are extracted and manufactured within the region.

1. Provide materials and products that use a minimum of 20 % of building products that are manufactured regionally within a radius of 500 miles from the project site.

a. Manufacturing refers to the final assembly of components into the building product that is furnished and installed by the tradesman.

2. Of the regionally manufactured materials used and documented, use a minimum of 50% of building materials and products that are extracted, harvested or recovered (as well as manufactured) within 500 miles of the project site.

2.04 SOURCE QUALITY CONTROL

A. Verification of Performance: Rate diffusers, registers, and grilles according to ASHRAE 70, "Method of Testing for Rating the Performance of Air Outlets and Inlets."

2.05 ACCEPTABLE MANUFACTURERS

A. Titus

B. Price

C. Krueger

D. Tuttle & Bailey

PART 3 - EXECUTION

3.01 EXAMINATION

A. Examine areas where diffusers, registers, and grilles are to be installed for compliance with requirements for installation tolerances and other conditions affecting performance of equipment.

B. Proceed with installation only after unsatisfactory conditions have been corrected.

3.02 INSTALLATION

A. Install diffusers, registers, and grilles level and plumb.

B. Ceiling-Mounted Outlets and Inlets: Drawings indicate general arrangement of ducts, fittings, and accessories. Air outlet and inlet locations have been indicated to achieve design requirements for air volume, noise criteria, airflow pattern, throw, and pressure drop. Make final locations where indicated, as much as practical. For units installed in lay-in ceiling panels, locate units in the center of panel. Where architectural features or other items conflict with installation, notify Architect for a determination of final location.

C. Install diffusers, registers, and grilles with airtight connections to ducts and to allow service and maintenance of dampers, air extractors, and fire dampers.

3.03 ADJUSTING

A. After installation, adjust diffusers, registers, and grilles to air patterns indicated, or as directed, before starting air balancing.

END OF SECTION 23 37 13

23 41 00

FILTERS

PART 1 - GENERAL

1.01 SECTION INCLUDES

A. Disposable media filters.

B. Filter frames.

C. Filter gauges.

1.02 RELATED SECTIONS

A. Section 237300 – Indoor, Central-Station Air-Handling Units.

B. Section 233100 – HVAC Ducts and Casings.

C. Section 233600 – Air Terminal Units.

D. Section 013300 Submittals.

E. Section 01524 Construction Waste Management

F. Section 01611 Environmental Management

G. Section 01570 Pollution Prevention and Control

1.03 REFERENCES

A. UL 900 – Test Performance of Air Filter Units.

B. ASHRAE 52 – Method of Testing Air Cleaning Devices used in General Ventilation for Removing Particulate Matter.

1.04 SUBMITTALS

A. Include filter media, filter performance data, filter assembly and filter frames.

B. Provide Operation and Maintenance manual.

C. Product data. Unless otherwise indicated, submit the following for each type of product provided under work of this Section:

1. Recycled Content:

a. Indicate recycled content; indicate percentage of pre-consumer and post-consumer recycled content per unit of product.

2. Local/Regional Materials:

   a. Indicate location of manufacturing facility; indicate distance between manufacturing facility and the project site.

   b. Indicate location of extraction, harvesting, and recovery; indicate distance between extraction, harvesting, and recovery and the project site.

3. VOC data:

   a. Submit manufacturer's product data for joint compounds. Indicate VOC and chemical component limits of the product. Submit MSDS highlighting VOC and chemical component limits. VOC contents and chemical component limits must be less than the limits of Green Seal's Standard GS-11.

   b. Submit manufacturer's certification that products comply with Green Seal's Standard GS-11

   c. Submit environmental data in accordance with Table 1 of ASTM E2129 for products provided under work of this Section.

4. Submit the following according to Conditions of the Construction Contract.

   a. Product data. Unless otherwise indicated, submit the following for each type of product provided under work of this Section:

1.05 QUALITY ASSURANCE

A. Provide filter media that is UL 900 listed, Class 2, as approved by local authorities.

B. Provide all filters as product of one manufacturer.

C. Assemble filter components to form filter banks from products of one manufacturer.

1.06 EXTRA MATERIALS

A. Provide one spare set of disposable media filters at project final acceptance for each piece of equipment requiring filters.

1.07 MAINTENANCE

A. Provide twelve (12) months maintenance of all materials and equipment under this section. Cost of the twelve (12) month normal and preventive maintenance shall be included within this scope of work.

1.08 ENVIRONMENTAL REQUIREMENTS

A. Do not operate units for any purpose, temporary or permanent, until ductwork is clean, filters are in place, bearings lubricated, and fan has been test run under observation. During construction, if the air units operate at any time, minimum MERV 13 filters shall be installed and kept clean.

B. Provide two sets of belts and three sets of filters for each unit. One set of filters to be installed when unit is started up and shall be protected from construction debris with additional media either at the first bank of filters, or covering each air intake (outside air and return air). Second set of filters to be installed when test and balance activities begin. At substantial completion shall inspect filters to determine if the third set should be installed or delivered to school operations personnel. Tag to identify associated unit.

PART 2 - PRODUCTS

2.01 ENVIRONMENTALLY PREFERABLE PRODUCTS

A. Provide environmentally preferable products to the greatest extent possible.

1. To the greatest extent possible, provide products and materials that promote stewardship of the earth's resources, promote good indoor environmental quality (IEQ), and promote efficiencies in operational performance.

B. Provide products listed on the EPA Comprehensive Procurement Guidelines to the greatest extent practicable.

C. Provide products listed on the USGBC Directory of Products and Services to the greatest extent possible.

2.02 RECYCLED CONTENT

A. Provide recycled content products to the greatest extent possible.

1. To the greatest extent possible, provide materials with recycled content such that the sum of post-consumer recycled content plus one-half of the post-industrial content constitutes at least 10% of the total value of the materials in the project.

2.03 REGIONAL MATERIALS

A. Provide Regional materials and products to the greatest extent possible that are extracted and manufactured within the region.

1. Provide materials and products that use a minimum of 20 % of building products that are manufactured regionally within a radius of 500 miles from the project site.

   a. Manufacturing refers to the final assembly of components into the building product that is furnished and installed by the tradesman.

2. Of the regionally manufactured materials used and documented, use a minimum of 50% of building materials and products that are extracted, harvested or recovered (as well as manufactured) within 500 miles of the project site.

2.04 MANUFACTURERS

A. American Air Filter.

B. Cam-Farr.

C. Continental.

2.05 PANEL FILTERS

A. All air filters shall be listed as (Class 1, Class 2) in accordance with Underwriters Laboratories, Inc., Building Materials Director requirements, except ultra-high efficiency filters, (HEPA or ULPA,) shall be manufactured of materials that are so listed by UL. All filters other than the ultrahigh efficiency type are to be rated in accordance with ASHRAE Test Standard 52-76 and performance characteristics are to be published in the manufacturer's literature. When specified performance characteristics are not published in the manufacturer's literature, the submittal data shall include certified documentation of performance by an approved independent test laboratory.

B. Permanent, Washable: Viscous coated, high velocity filters. The net velocity through the filters shall not exceed 500 fpm. Filters shall be 2" (two inches) thick and the initial clean resistance to air flow shall not exceed 0.10" (one tenth inch) w.g. Filters shall be installed in side access or front access frames, as shown on the drawings. Filters in front access frames shall be furnished with lift handles. Furnish one complete set of spare filters for each system.

C. Sectional, Renewable Media: Air filters shall be 2" (two inches) thick adhesive coated glass fiber media pads enclosed in sectional frames of not less than 16 (sixteen) gauge galvanized steel and equipped with a quick opening mechanism for changing filter media. The airflow capacity of the filters shall be based on a net filter face velocity not exceeding 350' (three hundred and fifty feet) per minute with an initial resistance no greater than 0.10" (one tenth inch) water gauge. When used as pre-filters, and mounted in the same holding frames as higher efficiency secondary air filters, the airflow capacity may be based on 500' per minute with an initial resistance not to exceed 0.17" water gauge. Filters shall have an average arrestance of not less than 70 to 75% when tested in accordance with ASHRAE Test Standard 52.

D. Replaceable, Dry Type, Moderate Efficiency: Filters shall be of the pleated media, disposable type, 2" (two inches) deep in direction of airflow, Class 1 MERV 8. Each filter cell shall utilize a nonwoven, lofted cotton media with a net effective area of not less than 7.0 square feet of media per 1.0 square feet of filter face area, a media support grid, and enclosing high wet strength cell sides. The 96% free area welded wire support grid shall be continuously bonded to the leaving air face of the media to properly support the radially tapered, pleated media in the air stream through the life span of the filter. The media itself shall be cemented to the inside perimeter of the cell sides to prevent bypass of unfiltered air. Filter efficiency shall average not less than 25 to 30% when tested in accordance with ASHRAE Test Standard 52-76. Initial clean resistance to air flow shall not exceed 0.30" w.g. at 500 fpm filter face velocity. The 24" x 24" size shall be certified to have a dust holding capacity of not less than 265 grams of ASHRAE Test Dust when operated at 500 fpm to a final resistance of 1.0" w.g.

E. Replaceable, Dry Type, Medium and/or High Efficiency (minimum MERV 13): Filters shall be 12" deep of the extended surface, supported pleat type. Each filter shall consist of high density, micro fine glass fiber media, media support grid, contour stabilizers, and enclosing galvanized steel frame. Media shall be laminated to a nonwoven synthetic backing to form a lofted surface for maximum dust holding capacity. The edges of the media shall be continuously bonded to the internal surfaces of the galvanized steel frame to prevent bypass of unfiltered air. Filter efficiency shall average not less than 80 to 85% when tested in accordance with ASHRAE Test Standard 52-76. Filters shall be 24" x 24" x 12" deep with an initial clean resistance not to exceed 0.35 inches w.g. at 500 fpm face velocity. The filters shall be certified to have a dust holding capacity of not less than 700 grams of ASHRAE Test Dust when operated at 500 fpm face velocity to a final resistance of 1" w.g.

F. Fabricate filter frames and supporting structures of 16 gauge galvanized steel or extruded aluminum T-section construction with necessary gasketing between frames and walls.

G. Standard Sizes: Provide for interchangeability of filter media of other manufacturers; for panel filters, size for required installation of filter media minimum 2 inch thick; for extended surface and high efficiency particulate filters, provide for upstream mounting.

H. Side Servicing Housing: Flanged for connection of ductwork, of reinforced 16 gauge galvanized steel; access doors with continuous gasketing and positive locking devices on both sides; extended aluminum tracks or channels for primary or secondary filters with positive sealing gaskets.

2.06 FILTER GAUGES

A. Each individual filter or filter bank handling 2,000 cfm or more shall be equipped with a diaphragm actuated dial and pointer type gauge with zero adjustment capability. The range of the scale shall be no greater than 1" w.g. above the filter manufacturer's recommended final resistance for the type of filter to which the gauge is being applied. Each gauge shall be provided with an adjustable signal flag, two static pressure tips with compression fittings, two three way vent valves with compression fittings, two lengths of aluminum tubing, and a mounting plate with screws.

B. Provide dry contact switch to indicate high-pressure limit (adjustable) for connection by others to FCMS system.

PART 3 - EXECUTION

3.01 INSTALLATION

A. Install air cleaning devices in accordance with manufacturer’s instructions.

B. Prevent passage of unfiltered air around filters with felt, rubber, or neoprene gaskets.

C. Do not operate fan system until filters temporary or permanent are in place. Replace temporary filter used during construction.

D. Install static pressure tips upstream and downstream of filers. Mount on outside of filter housing of filter plenum, in accessible position. Adjust and level.

E. Provide differential pressure sensor at filter bank of each air handling unit.

END OF SECTION 23 41 00

23 64 26

AIR-COOLED WATER CHILLERS

PART 1 - GENERAL

1.01 RELATED DOCUMENTS

A. Drawings and general provisions of the Contract, including General and Supplementary Conditions and Division 01 Specification Sections, apply to this Section.

1.02 SUMMARY

A. Section Includes:

1. Packaged, air-cooled chillers.

2. Microprocessor controlled, air-cooled liquid chiller for outdoor installation, utilizing scroll compressors, low sound fans, electronic expansion valve (60 Hz only).

1.03 DEFINITIONS

A. COP: Coefficient of performance. The ratio of the rate of heat removal to the rate of energy input using consistent units for any given set of rating conditions.

B. DDC: Direct digital control.

C. EER: Energy-efficiency ratio. The ratio of the cooling capacity given in terms of Btu/h to the total power input given in terms of watts at any given set of rating conditions.

D. IPLV: Integrated part-load value. A single-number part-load efficiency figure of merit calculated per the method defined by AHRI 550/590 and referenced to AHRI standard rating conditions.

E. kW/Ton: The ratio of total power input of the chiller in kilowatts to the net refrigerating capacity in tons at any given set of rating conditions.

F. NPLV: Nonstandard part-load value. A single-number part-load efficiency figure of merit calculated per the method defined by AHRI 550/590 and intended for operating conditions other than AHRI standard rating conditions.

1.04 ACTION SUBMITTALS

A. Product Data: For each type of product.

1. Include refrigerant, rated capacities, operating characteristics, furnished specialties, and accessories.

2. Performance at AHRI standard conditions and at conditions indicated.

3. Performance at AHRI standard unloading conditions.

4. Minimum evaporator flow rate.

5. Refrigerant capacity of chiller.

6. Oil capacity of chiller.

7. Fluid capacity of evaporator.

8. Characteristics of safety relief valves.

9. Minimum entering condenser-air temperature.

10. Maximum entering condenser-air temperature.

11. Performance at varying capacities with constant-design, entering condenser-air temperature. Repeat performance at varying capacities for different entering condenser-air temperatures from design to minimum in 10 deg F increments.

B. Shop Drawings:

1. Include plans, elevations, sections, and attachment details.

2. Include details of equipment assemblies. Indicate dimensions, weights, loads, required clearances, method of field assembly, components, and location and size of each field connection.

3. Include diagrams for power, signal, and control wiring.

1.05 INFORMATIONAL SUBMITTALS

A. Coordination Drawings: Floor plans, drawn to scale, on which the following items are shown and coordinated with each other, using input from installers of the items involved:

1. Structural supports.

2. Piping roughing-in requirements.

3. Wiring roughing-in requirements, including spaces reserved for electrical equipment.

4. Access requirements, including working clearances for mechanical controls and electrical equipment, and tube pull and service clearances.

B. Product Certificates: For certification required in "Quality Assurance" Article.

C. Seismic Qualification Data: Certificate, for chillers, accessories, and components, from manufacturer.

1. Basis for Certification: Indicate whether withstand certification is based on actual test of assembled components or on calculation.

2. Dimensioned Outline Drawings of Equipment Unit: Identify center of gravity and locate and describe mounting and anchorage provisions.

3. Detailed description of equipment anchorage devices on which the certification is based and their installation requirements.

D. Source quality-control reports.

E. Field Test Reports: Include startup service reports.

F. Sample Warranty: For AHRI special warranty.

1.06 CLOSEOUT SUBMITTALS

A. Operation and Maintenance Data: For each chiller to include in emergency, operation, and maintenance manuals.

1.07 QUALITY ASSURANCE

A. AHRI Certification: Certify chiller according to AHRI 590 certification program(s).

B. AHRI Rating: Rate chiller performance according to requirements in AHRI 550/590.

C. ASHRAE Compliance:

1. ASHRAE 15 for safety code for mechanical refrigeration.

2. ASHRAE 147 for refrigerant leaks, recovery, and handling and storage requirements.

D. ASHRAE/IES Compliance: Applicable requirements in ASHRAE/IES 90.1.

E. ASME Compliance: Fabricate and label chiller to comply with ASME Boiler and Pressure Vessel Code: Section VIII, Division 1, and include an ASME U-stamp and nameplate certifying compliance.

F. Comply with NFPA 70.

G. Comply with requirements of UL and UL Canada and include label by a qualified testing agency showing compliance.

1.08 DELIVERY, STORAGE, AND HANDLING

A. Ship chillers from the factory fully charged with refrigerant.

B. Ship each chiller with a full charge of refrigerant. Charge each chiller with nitrogen if refrigerant is shipped in containers separate from chiller.

C. Ship each oil-lubricated chiller with a full charge of oil.

1. Ship oil factory installed in chiller.

1.09 WARRANTY

A. Special Warranty: Manufacturer agrees to repair or replace components of chillers that fail in materials or workmanship within specified warranty period.

1. Extended warranties include, but are not limited to, the following:

a. Complete chiller including refrigerant and oil charge.

b. Complete compressor and drive assembly including refrigerant and oil charge.

c. Refrigerant and oil charge.

d. Parts and labor.

e. Loss of refrigerant charge for any reason.

2. Warranty Period: 5 years from date of equipment startup.

PART 2 - PRODUCTS

2.01 PERFORMANCE REQUIREMENTS

A. Seismic Performance: Chillers shall withstand the effects of earthquake motions determined according to ASCE/SEI 7.

1. The term "withstand" means "the unit will remain in place without separation of any parts when subjected to the seismic forces specified."

B. Site Altitude: Chiller shall be suitable for altitude in which installed without affecting performance indicated.

C. Performance Tolerance: Comply with the following in lieu of AHRI 550/590:

1. Allowable Capacity Tolerance: Zero percent.

2. Allowable IPLV/NPLV Performance Tolerance: Zero percent.

2.02 PACKAGED, AIR-COOLED CHILLERS

~~A.~~ Manufacturers: Subject to compliance with requirements:

1. Carrier Corporation Direct (Basis of design)

2. Trane

3. Daikin

B. Description: Factory-assembled and run-tested chiller complete with base and frame, condenser casing, compressors, compressor motors and motor controllers, evaporator, condenser coils, condenser fans and motors, electrical power, controls, and accessories.

C. Microprocessor controlled, air-cooled liquid chiller for outdoor installation, utilizing scroll compressors, low sound fans, electronic expansion valve and fluid storage tank.

D. Chiller units shall incorporate "*Greenspeed"* intelligence, all fans are controlled with variable speed fan drive motors. Chiller software shall be specifically developed to coordinate optimal fan speed for application conditions and provide refrigerant circuit optimization, resulting in higher part load efficiency and reduced acoustic levels.

E. Unit shall be full load run tested at the factory.

F. Fabricate base, frame, and attachment to chiller components strong enough to resist chiller movement during a seismic event when chiller base is anchored to field support structure.

G. Cabinet:

1. Base: Galvanized-steel base extending the perimeter of chiller. Secure frame, compressors, and evaporator to base to provide a single-piece unit.

2. Frame: Rigid galvanized-steel frame secured to base and designed to support cabinet, condenser, control panel, and other chiller components not directly supported by base.

3. Casing: Galvanized steel.

4. Finish: Coat base, frame, and casing with a corrosion-resistant coating.

5. Sound-reduction package designed to reduce sound level without affecting performance and consisting of the following:

   a. Acoustic enclosure around compressors.

6. Cabinet shall be capable of withstanding 500-hour salt spray test in accordance with the ASTM (American Society for Testing and Materials, U.S.A.) B-117 standard.

H. Compressors:

1. Description: Fully hermetic, direct-drive, scroll-type compressors.

2. Compressor motors shall be cooled by refrigerant gas passing through motor windings and shall have either internal line break thermal and current overload protection or external current overload modules with compressor temperature sensors.

3. Compressor motors shall be cooled by refrigerant gas passing through motor windings and shall have either internal line break thermal and current overload protection or external current overload modules with compressor temperature sensors.

4. Compressors shall be mounted on rubber in shear vibration isolators.

5. Staging of compressors shall provide unloading capability. Digital compressor unloading control shall be provided.

6. Each compressor provided with suction and discharge shutoff valves, crankcase oil heater, and suction strainer.

I. Service: Easily accessible for inspection and service.

J. Capacity Control: On-off compressor cycling and modulating slide-valve assembly or port unloaders combined with hot-gas bypass, if necessary, to achieve performance indicated.

1. Maintain stable operation throughout range of operation. Configure to achieve most energy-efficient operation possible.

2. Operating Range: From 100 to 20 percent of design capacity.

K. Oil Lubrication System: Consisting of pump if required, filtration, heater, cooler, factory-wired power connection, and controls.

1. Provide lubrication to bearings, gears, and other rotating surfaces at all operating, startup, shutdown, and standby conditions including power failure.

2. Thermostatically controlled oil heater properly sized to remove refrigerant from oil.

3. Factory-installed and pressure-tested piping with isolation valves and accessories.

4. Oil compatible with refrigerant and chiller components.

5. Positive visual indication of oil level.

L. Vibration Control:

1. Vibration Balance: Balance chiller compressors and drive assemblies to provide a precision balance that is free of noticeable vibration over the entire operating range.

a. Overspeed Test: 25 percent above design operating speed.

2. Isolation: Mount individual compressors on vibration isolators.

M. Compressor Motors:

1. Hermetically sealed and cooled by refrigerant suction gas.

2. High-torque, induction type with inherent thermal-overload protection on each phase.

~~N.~~ Compressor Motor Controllers:

1. Star-Delta, Reduced-Voltage Controller: NEMA ICS 2, closed transition.

O. Refrigerant Circuits:

1. Refrigerant: Type as indicated on Drawings.

2. Refrigerant Type: R-32

3. Refrigerant Compatibility: Chiller parts exposed to refrigerants shall be fully compatible with refrigerants, and pressure components shall be rated for refrigerant pressures.

4. Refrigerant Circuit: Each shall include an expansion valve, refrigerant charging connections, compressor suction and discharge shutoff valves, a liquid-line shutoff valve, a filter-dryer, expend on filter dryer to have replaceable cores, a sight glass with moisture indicator, a liquid-line solenoid valve, Hot Gas By-pass and an insulated suction line.

5. Pressure Relief Device:

   a. Comply with requirements in ASHRAE 15 and in applicable portions of ASME Boiler and Pressure Vessel Code: Section VIII, Division 1.

   b. ASME-rated, spring-loaded pressure relief valve; single- or multiple-reseating type.

P. Evaporator:

1. Description: Shell-and-tube design.

   a. Flooded type with fluid flowing through tubes and refrigerant flowing around tubes within the shell.

2. Cooler shall be rated for a refrigerant working-side pressure of 450 psig and shall be tested for a maximum water-side pressure of 300 psig.

3. It shall be single-pass, ANSI (American National Standards Institute) type 316 stainless steel, brazed plate construction.

4. Shell shall be insulated with $^{3}/_{4}$-in. closed-cell, polyvinyl-chloride foam with a maximum K factor of 0.28.

5. Fluid Nozzles: Terminated with mechanical-coupling end connections for connection to field piping.

6. Tube Construction: Individually replaceable copper tubes with enhanced fin design, expanded into tube sheets.

7. Cooler shall have optional factory-installed heater, to protect cooler from ambient temperature freeze down to 0 F.

8. Unit shall incorporate 2 independent refrigerant circuits.

9. Unit shall be provided with a factory-installed flow switch.

10. Cooler fluid inlet line shall have a 40- mesh strainer just ahead of the cooler.

Q. Air-Cooled Condenser:

1. Coil shall be air-cooled Novation® heat exchanger technology with microchannel (MCHX) coils and shall have a series of flat tubes containing a series of multiple, parallel flow microchannels layered between the refrigerant manifolds.

2. Coils shall consist of a two-pass arrangement. Coil construction shall consist of aluminum alloys for fins, tubes, and manifolds in combination with a corrosion-resistant coating.

3. Tubes shall be cleaned, dehydrated, and sealed.

4. Assembled condenser coils shall be leak tested and pressure tested at 656 psig.

5. Plate-fin coil with integral subcooling on each circuit, rated at 450 psig.

   a. Hail Protection: Provide condenser coils with louvers to protect against hail damage.

6. Fans: Direct-drive propeller type with statically and dynamically balanced extra low noise fan blades design, arranged for vertical air discharge.

7. Fan Motors: Totally enclosed non-ventilating or totally enclosed air over enclosure, with permanently lubricated bearings. Equip each motor with overload protection integral to either the motor or chiller controls.

8. Condenser fan openings shall be equipped with PVC coated steel wire safety guards.

R. Corrosion-Resistant Coating:

1. Apply a corrosion-resistant coating capable of withstanding a 500-hour salt-spray test to base, frame, and casing according to:

   a. ASTM B117 for salt spray

   b. ASTM D2794 for minimum impact resistance of 100 in-lb.

   c. ASTM B3359 for cross-hatch adhesion of 5B.

2. Application: Immersion or Spray

3. Thickness: 1 mil.

4. Gloss: Minimum of 50 gloss units on a single-angle, 60-degree meter.

5. UV Protection: Spray-applied topcoat.

S. Electrical Power:

1. Factory-installed and -wired switches, motor controllers, transformers, and other electrical devices necessary shall provide a field-power connection to chiller.

2. House in a unit-mounted, outdoor rated, enclosure (NEMA 250, Type 3R) with hinged access door.

3. Wiring shall be numbered to match wiring diagram.

4. Install factory wiring outside of an enclosure in a raceway.

5. Field-power interface shall be to factory disconnect.

    a. Disconnect means shall be interlocked with door operation.

    b. Minimum withstand rating shall be as required by electrical power distribution system, but not less than 65,000A.

6. Provide branch power circuit to each motor and to controls with one of the following disconnecting means:

    a. NEMA KS 1, heavy-duty, fusible switch with rejection-type fuse clips rated for fuses. Select and size fuses to provide Type 2 protection according to IEC 60947-4-1.

    b. UL 489, motor-circuit protector (circuit breaker) with field-adjustable, short-circuit-trip set point.

7. Provide each motor with overcurrent protection.

8. Overload relay sized according to UL 1995 or an integral component of chiller control microprocessor.

9. Phase-Failure and Undervoltage Relays: Solid-state sensing with adjustable settings.

10. Unit shall be shipped with factory control and power wiring installed.

11. Control Transformer: Unit-mounted transformer with primary and secondary fuses and sized with enough capacity to operate electrical load plus spare capacity.

    a. Power unit-mounted controls where indicated.

    b. Power unit-mounted, ground fault interrupt duplex receptacle.

12. Control Relays: Auxiliary and adjustable time-delay relays.

13. For chiller electrical power supply, indicate the following:

    a. Current and phase to phase for all three phases.

    b. Voltage, phase to phase, and phase to neutral for all three phases.

    c. Running log of total power versus time (kilowatt-hours).

    d. Fault log, with time and date of each.

T. Controls:

1. Standalone and microprocessor based. Microprocessor with non-volatile memory. Battery backup system shall not be accepted.

2. Enclosure: Share enclosure with electrical power devices or provide a separate enclosure.

3. Control transformer to serve all controllers, relays, and control components

4. Operator Interface: Multiple-character digital or graphic display with dynamic update of information and with keypad or touch-sensitive display located on front of control enclosure. In either imperial or metric units, display the following information:

    a. Date and time.

    b. Operating or alarm status.

    c. Operating hours.

    d. Outdoor-air temperature if required for chilled-water reset.

    e. Temperature and pressure of operating set points.

    f. Entering and leaving temperatures of chilled water.

    g. Refrigerant pressures in evaporator and condenser.

    h. Saturation temperature in evaporator and condenser.

    i. No cooling load condition.

    j. Elapsed time meter (compressor run status).

    k. Pump status.

    l. Antirecycling timer status.

    m. Percent of maximum motor amperage.

    n. Current-limit set point.

    o. Number of compressor starts.

5. Control Functions:

    a. Manual or automatic startup and shutdown time schedule.

    b. Entering and leaving chilled-water temperatures, control set points, and motor load limits.

    c. Current limit and demand limit.

d. External chiller emergency stop.

e. Antirecycling timer.

f. Automatic lead-lag switching.

g. Variable evaporator flow.

h. Hermetic scroll compressors are maintenance free and protected by an auto-adaptive control that minimizes compressor wear.

i. Capacity control based on leaving chilled fluid temperature and compensated by rate of change of return-fluid temperature with temperature set point accuracy to 0.1°F.

j. Limiting the chilled fluid temperature pull-down rate at start-up to an adjustable range of 0.2°F to 2°F per minute to prevent excessive demand spikes at start-up.

k. Dual chiller control for parallel chiller applications without addition of hardware modules and control panels (additional thermistors and wells if required).

6. Manually Reset Safety Controls: The following conditions shall shut down chiller and require manual reset:

a. Low evaporator pressure or high condenser pressure.

b. Low chilled-water temperature.

c. Refrigerant high pressure.

d. High or low oil pressure.

e. High oil temperature.

f. Loss of chilled-water flow.

g. Control device failure.

7. Trending: Capability to trend analog data over an adjustable period and frequency of polling.

8. Security Access: Provide electronic security access to controls through identification and password with at least three levels of access: view only; view and operate; and view, operate, and service.

9. Control Authority: At least four conditions: Off, local manual control at chiller, local automatic control at chiller, and automatic control through a remote source.

10. BACnet Communication shall provide pre-programmed factory-installed communication capability with a BACnet MS/TP network. Allows integration with i-Vu® Open control system or a third-party BACnet building automation system. No field programming shall be required.

11. Interface with DDC System for HVAC: Factory-installed hardware and software to enable the DDC system for HVAC to monitor, control, and display chiller status and alarms.

    a. Hardwired Points:

        1) Monitoring: On-off status.

        2) Control: On-off operation.

    b. ASHRAE 135 (BACnet) communication interface with the DDC system for HVAC shall enable the DDC system for HVAC operator to remotely control and monitor the chiller from an operator workstation. Control features and monitoring points displayed locally at chiller control panel shall be available through the DDC system for HVAC.

U. Insulation:

1. Material: Closed-cell, flexible elastomeric, thermal insulation complying with ASTM C534, Type I for tubular materials and Type II for sheet materials.

2. Thickness: 1 1/4 inch.

3. Factory-applied insulation over cold surfaces of chiller components.

    a. Adhesive: As recommended by insulation manufacturer and applied to 100 percent of insulation contact surface. Seal seams and joints.

4. Apply protective coating to exposed surfaces of insulation to protect insulation from weather.

V. Accessories:

1. Factory-furnished and installed, chilled-water flow switch.

2. Individual compressor suction and discharge pressure gages with shutoff valves for each refrigerant circuit.

3. Factory-furnished neoprene isolator blocks for field installation.

W. Capacities and Characteristics:

1. Low Ambient Operation: Chiller designed for operation to 25 deg F.

2. High Ambient Operation: Chiller designed for operation to 115 deg F.

X. Factory test and inspect evaporator and condenser according to ASME Boiler and Pressure Vessel Code: Section VIII, Division 1.

Y. The control panel shall include, as standard, a scrolling marquee display capable of indicating the safety lockout condition by displaying a code for which an explanation may be scrolled at the display.

Z. Information included for display shall be:

1. Compressor lockout.
2. Loss of charge.
3. Low fluid flow.
4. Cooler freeze protection.
5. Cooler set point.
6. Chilled water reset parameters.
7. Thermistor and transducer malfunction.
8. Entering and leaving-fluid temperature.
9. Compressor suction temperature.
10. Cooler and condenser pressure.
11. System refrigerant temperatures.
12. Chiller run hours.
13. Compressor run hours.
14. Compressor number of starts.
15. Low superheat.
16. Time of day

PART 3 - EXECUTION

3.01 EXAMINATION

A. Examine chillers before installation. Reject chillers that are damaged.

B. Examine roughing-in for equipment support, anchor-bolt sizes and locations, piping, and electrical connections to verify actual locations, sizes, and other conditions affecting chiller performance, maintenance, and operations before equipment installation.

1. Final chiller locations indicated on Drawings are approximate. Determine exact locations before roughing-in for piping and electrical connections.

C. Proceed with installation only after unsatisfactory conditions have been corrected.

3.02 CHILLER INSTALLATION

A. Coordinate sizes and locations of concrete bases with actual equipment provided. Cast anchor-bolt inserts into bases.

B. Coordinate sizes, locations, and anchoring attachments of structural-steel support structures.

C. Coordinate sizes and locations of roof curbs, equipment supports, and roof penetrations with actual equipment provided.

D. Install chillers on support structure indicated.

E. Equipment Mounting:

1. Install chillers on cast-in-place concrete equipment bases. Comply with requirements for equipment bases and foundations specified in Section 033000 "Cast-in-Place Concrete."

2. Comply with requirements for vibration isolation devices specified in Section 230548.13 "Vibration Controls for HVAC."

F. Maintain manufacturer's recommended clearances for service and maintenance.

G. Charge chiller with refrigerant and fill with oil if not factory installed.

H. Install separate devices furnished by manufacturer and not factory installed.

3.03 CONNECTIONS

A. Comply with requirements for piping specified in Section 232113 "Hydronic Piping," Section 232116 Hydronic Piping Specialties,". Drawings indicate general arrangement of piping, fittings, and specialties.

B. Install piping adjacent to chiller to allow service and maintenance.

C. Evaporator Fluid Connections: Connect to evaporator inlet with shutoff valve, strainer, flexible connector, thermometer, and plugged tee with pressure gage. Connect to evaporator outlet with shutoff valve, balancing valve, flexible connector, flow switch, thermometer, plugged tee with shutoff valve and pressure gage, flow meter and drain connection with valve. Make connection to chiller with a flange or grooved connection, and with flexible connector.

D. Connect each chiller drain connection with a union and drainpipe, and extend pipe, full size of connection, to floor drain. Provide a shut off valve at each connection.

3.04 STARTUP SERVICE

A. Engage a factory-authorized service representative to perform startup service.

1. Complete installation and startup check according to manufacturer's written instructions.

2. Verify that refrigerant charge is sufficient, and chiller has been leak tested.

3. Verify that pumps are installed and functional.

4. Verify thermometers and gauges are installed and have been leak checked.

5. Operate chiller for run-in period.

6. Check bearing lubrication and oil levels.

7. For chillers installed indoors, verify that refrigerant pressure relief device is vented outdoors.

8. Verify proper motor rotation.

9. Verify static deflection of vibration isolators, including deflection during chiller startup and shutdown.

10. Verify and record performance of fluid flow and low-temperature interlocks for evaporator and condenser.

11. Verify and record performance of chiller protection devices.

12. Test and adjust controls and safeties. Replace damaged or malfunctioning controls and equipment.

B. Inspect field-assembled components, equipment installation, and piping and electrical connections for proper assembly, installation, and connection.

C. Prepare test and inspection startup reports.

3.05 DEMONSTRATION

A. Engage a factory-authorized service representative to train Owner's maintenance personnel to adjust, operate, and maintain chillers.

END OF SECTION

23 81 33

UNITARY SPLIT-SYSTEM AIR CONDITIONERS

PART 1 - GENERAL

1.01 SECTION INCLUDES

A. Furnish and install and install direct expansion air condition system, including:

1. Air handling/ fan coil unit.

2. Outdoor condensing unit.

3. Plenum/ pedestal.

4. Thermostat.

1.02 RELATED SECTIONS

A. Section 220700 – Plumbing Piping Insulation

B. Section 230700 – HVAC Piping Insulation.

C. Section 230993 –Direct-Digital Control System for HVAC.

D. Section 230593 – Testing, Adjusting, and Balancing for HVAC.

E. Coordinate with Commissioning Requirements indicated in Section 019113. This contractor is responsible to comply with all requirements for the above section.

1.03 REFERENCES

A. ARI 240 – Air Source Unitary Heat Pump Equipment.

B. ARI 270 – Sound Rating of Outdoor Unitary Equipment.

1.04 SUBMITTALS

A. Include product data and schematic layouts showing condensing units, air handling/ fan coil unit, refrigerant piping and accessories required for complete system. Include complete pipe sizing data.

B. Include rated capacities, dimensions, weights, accessories, required clearances, electrical requirements, wiring diagrams and location and size of field connections.

C. Include manufacturer’s installation instructions.

D. Provide operation and maintenance manual.

1.05 QUALITY ASSURANCE

1.06 WARRANTY

A. Provide 1 year whole unit parts only warranty.

B. Provide five-year manufacturer’s replacement warranty on compressor.

PART 2 - PRODUCTS

2.01 MANUFACTURERS

A. Carrier.

B. Trane.

C. Daikin

2.02 SYSTEM DESCRIPTION

A. Provide split conditioning system consisting of indoor air handling/ fan coil unit, outdoor condensing unit, refrigerant piping, fittings and accessories, and controls. Factory assembled components and test unit.

B. Heating and Cooling Capacities: As indicated on Drawings.

C. Refrigerant shall be R-410A.

2.03 AIR HANDLING/FAN COIL UNIT

A. Basic Unit:

1. Fabricated exterior unit casing of heavy gauge galvanized steel, painted with epoxy based enamel paint. Provide color chart for color selection by Architect.

2. All unit panels must be removable with a minimum 2 inch microbial resistant and glass fiber thermal insulation liner with sealed edges.

3. Fabricate fan deck of galvanized steel. Fabricate drain pans of 304 stainless steel externally insulated with fire retardant, closed cell foam insulation.

4. Provide liquid sensor at the shallowest part of the pan with all corresponding controls within the drain pan. Upon the presence of liquid, the sensor shall de-energize the unit and send an alarm signal to the BAS.

5. Provide with integral double deflection supply grilles and hinged bar return grilles, unless otherwise indicated on the drawings to have ductwork connections with 1” duct collars, and one inch filter frame.

B. Coils:

1. Construct coils with 2” O.D. copper tubes with aluminum fins mechanically bonded to the tubes.

2. Test al coils for design working pressure of 250 psig @ 200EF.

3. Heating and cooling coils shall be sized as required to meet or exceed the capacities indicated on the drawings.

C. Fans: Centrifugal, forward-curved, double-width wheels. Mount frame on vibration isolators.

D. Motors: Resilient mounted, three-speed, permanent split capacitor type in total compliance with Section 230513 – Common Motor Requirements for HVAC.

E. Filters: 1 inch disposable with galvanized holding frame in total compliance with Section 234100 – Particulate Air Filtration.

2.04 AIR COOLED CONDENSING UNITS

A. Provide air cooled condensing units as scheduled; self-contained, packaged, factory assembled and pre-wired units suitable for outdoor use consisting of cabinet, compressors, condensing coil and fans, integral sub-cooling coil, controls, liquid receiver and screens.

B. Provide corrosion resistant materials for unit parts which come in contract with refrigerant.

C. Provide timer conduits to prevent rapid cycling of compressor.

D. Fabricate cabinet from galvanized steel, with baked enamel finish; provide removable access doors or panels with quick fasteners.

E. Compressor: Hermetically sealed or semi-hermetic type, 1750 rpm, resiliently mounted with positive lubrication, crankcase heater, cylinder un-loaders for capacity modulation, motor overload protection, service valves, filter direr, suction and discharge valves, with gauge ports, and high and low pressure safety controls.

F. Condenser:

1. Seamless copper tubing with aluminum fins coil.

2. Provide condenser fans which discharge, vertically and have direct fan resiliently mounted with guard and motor.

3. Provide fan motor with permanently lubricated ball bearing type with built-in current and overload protection.

G. Provide unit with high and low pressure cutouts for compressor, non-recycling pump down, reset relay and oil pressure safety (7 ½ ton units and larger). Provide with controls to permit operation down to 0 degree F ambient temperature at minimum compressor load.

2.05 PIPING

A. Provide one refrigerant lint filter dryer and outside pressure taps in each refrigerant circuit.

2.06 CONTROLS

A. Refer to Section 230993 –Direct-Digital Control System for HVAC.

PART 3 - EXECUTION

3.01 INSTALLATION

A. Install in accordance with manufacturer’s instructions.

B. Verify proper refrigerant charge and operating pressures. Supplement factory charge (R-410) if necessary.

C. Mount unit in safe and accessible location for maintenance.

END OF SECTION 238133

26 05 00

COMMON WORK RESULTS FOR ELECTRICAL

PART 1 - GENERAL

1.01 RELATED DOCUMENTS

A. Drawings and general provisions of the Contract, including General and Supplementary Conditions and Division 01 Specification Sections, apply to this Section.

B. Coordinate with Commissioning Requirements indicated in Section 019113. This Contractor is responsible to comply with all requirements for the above section.

1.02 SUMMARY

A. Section Includes:

1. Summary of Work.
2. Submittals, Analysis and Device Schedules.
3. Record Documents.
4. Operating and Maintenance Manuals.
5. General Electrical Product Requirements.
6. General Electrical Installation Requirements.
7. Electrical equipment coordination and installation.
8. Sleeves for raceways and cables.
9. Sleeve seals.
10. Grout.
11. Common electrical installation requirements.

B. Provide all work required for complete electrical and ancillary system as indicated on the drawings and in these specifications. This may include, but is not necessarily limited to; panelboards, transformers, cabinets, motor controllers, circuit breakers, fuses, disconnect switches, surge suppression, fire alarm system, Lighting Control System, interior and exterior lighting, parking lot lighting, lamps, relay panels, contactors, controls, wiring devices, wire and cable, grounding and bonding, lightning protection, equipment wiring system, conduit, raceways, boxes, supporting devices, identification, fire stopping, testing, excavating, concrete equipment bases, concrete duct encasements, conduit sleeves and supports, anchors, vibration and sound isolation, access panels, record drawings, installation permits, inspections by governing authorities, electrical work of certain temporary facilities and services, cutting-and-patching work, utility connection coordination, start-up of electrical systems and equipment, training of Owner's operating personnel, operating and maintenance manuals, final cleaning of electrical and similar work.

C. Except where otherwise indicated, electrical drawings prepared by Engineer (contract drawings) are diagrammatic in nature and may not show locations accurately for various components of electrical systems. It is the intention of the Construction Documents to establish the types and functions of the systems, but not to set forth each and every item essential to the functioning of any system. The Contractor shall make necessary changes or additions as may be reasonably inferred from the construction documents for a complete operating system as required and record these on the record documents at no cost to the Owner.

D. Contractor shall visit site prior to submitting his proposal and become familiar with the conditions under which the Work is to be performed, and correlate site observations with the requirements of the Contract Documents. Errors, inconsistencies or omissions discovered shall be reported to the Architect/Engineer at once.

E. All electrical products and installations shall comply with the latest additions of the following standards where applicable:

1. ADA - AMERICANS WITH DISABILITIES ACT
2. ANSI - AMERICAN NATIONAL STANDARDS INSTITUTE
3. ASTM - AMERICAN SOCIETY FOR TESTING AND MATERIALS
4. CBM - CERTIFIED BALLAST MANUFACTURERS
5. ETL - ELECTRICAL TESTING LABORATORIES
6. FM - FACTORY MUTUAL
7. ICEA - INSULATED CABLE ENGINEERS ASSOCIATION
8. IEEE - INSTITUTE OF ELECTRONICS AND ELECTRICAL ENGINEERS
9. NEC - NATIONAL ELECTRICAL CODE
10. NECA - NATIONAL ELECTRICAL CONTRACTORS ASSOCIATION
11. NEMA - NATIONAL ELECTRICAL MANUFACTURERS ASSOCIATION
12. NESC - NATIONAL ELECTRICAL SAFETY CODES
13. NFPA - NATIONAL FIRE PROTECTION ASSOCIATION
14. NETA - INTERNATIONAL ELECTRICAL TESTING ASSOCIATION
15. OSHA - OCCUPATIONAL SAFETY AND HEALTH ASSOCIATION
16. UBC - UNIFORM BUILDING CODE

17. IBC – INTERNATIONAL BUILDING CODE

18. ICC – INTERNATIONAL CODE COUNCIL

19. IECC – INTERNATIONAL ENERGY CONSERVATION CODE

20. ISO – INTERNATIONAL ORGANIZATION FOR STANDARDIZATIONUL

21. UNDERWRITERS LABORATORIES, INC.

22. TAS – TEXAS ACCESSIBILITY STANDARDS

23. STATE ENERGY CONSERVATION CODE

24. MUNICIPAL OR COUNTY CODES. In the event of conflicts between codes or standards, the more stringent requirements shall govern.

F. All work and materials shall be warranted as indicated in Division 1.

G. Contractor is responsible for filing and paying for all fees and obtaining necessary permits and certificates of inspection, and shall deliver all certificates of inspection to Owner, and include copies with maintenance manuals.

1.03 DEFINITIONS

A. NRTL: Nationally Recognized Testing Laboratory, including United Laboratories (UL) and Intertek (ETL).

1.04 SUBMITTALS

A. General Submittal Requirements:

1. All submittals shall be in accordance with Division 1 requirements.

1. Submit number of copies indicated in Division 1 or 6 copies, whichever is greater.

2. Applicability: Wherever it is indicated that shop drawings, samples, manufacturer's brochure, certification, test, copy of standard operating instructions, manual, extra stock, or warranty is required, appropriate submittal is required regardless of whether it is specified as "submittal"; Engineer’s decision shall be final.

3. Do not purchase equipment until submittals have been reviewed by Engineer with no exceptions taken.

4. Signed Commitments: Do not proceed with transfer of electrical systems to Owner for operation until warranties, performance certifications, maintenance agreements and similar commitments to be signed by Contractor and other entities have been executed and transmitted to Engineer (for Owner's records).

5. Response to Submittals: Where standard product data have been submitted in fulfillment of project requirements, it is recognized that submitter has already determined that

products fulfill specified requirements, and that submittals are for engineer's information only, but will be returned without action where observed to be non-complying with requirements. Where uniquely prepared information is submitted, it is recognized to represent preparer's interpretation or solution to specified requirements, subject to Engineer's concurrence and appropriate action as indicated in Division 1.

6. Submittals shall be signed by the General Contractor and Subcontractor responsible for this work.

7. The Engineer's review of submittals is solely for general conformance with the design concept. The Engineer's review does not relieve the Contractor from total responsibility for quantities, errors, omissions or compliance with the intent of the original contract documents. Review and approval by the Contractor is required before fabrication, shipment or installation.

B. Substitutions: Electrical submittals are not opportunities for gaining acceptance of substitutions. Any variance from the contract documents shall be identified in accordance with Division 1 requirements. Substitutions will be reviewed only for those reason identified in Division 1 and only if the procedures identified in Division 1 are followed. Any variances from the contract documents in the submittals which are not identified by the Contractor in accordance with the procedures of Division 1 and subsequently not identified by the Engineer's review shall be corrected by the Contractor at no cost to the Owner. Substitution request would only be considered if product is equal or better than what listed. No substitution will be allowed for fire alarm system and any electrical products and equipment.

C. Coordination Drawings: Prior to any submittals being reviewed, the Contractor shall provide the coordination drawings indicated in Division 1. In accordance with Division 1, the coordination drawings shall show work in and above ceilings and in mechanical and electrical rooms with horizontal and vertical dimensions to avoid interference with structural framing, ceilings, partitions and other services. The coordination drawings shall be to a scale of 1/4" = 1'-0" or larger. Coordination drawings in the buildings shall include but not be limited to all Electrical rooms with size and location, major electrical equipment and accessories, switchgear and clearances, HVAC ductworks in rooms, plumbing, air grilles, light fixtures, communications equipment, access panels, transformers, switchboards, panelboards, control panels, fire alarm equipment, code clearances for equipment, manufacturers required maintenance clearance for equipment, concrete equipment pads, exterior wall penetrations, foundation penetrations, and fire rated wall penetrations.

D. Short Circuit Analysis: Prior to any electrical submittals being reviewed, the Contractor shall perform short-circuit analysis of the specified electrical power distribution system. This analysis shall include:

1. A calculation of the maximum RMS symmetrical three-phase short-circuit current available at each panel location in the electrical system. The results shall represent the highest short-circuit currents to which the equipment might be subjected under the reported system conditions. The short circuit currents shall be calculated with the aid of a computer. The Contractor shall obtain necessary information from the utility to do this prior to furnishing equipment and coordinate with manufacturer to meet the greater of minimum required rating and rating indicated on Drawings.

1. Appropriate motor short-circuit contribution such that the calculated values will represent the highest short-circuit current to which the equipment will be subjected under fault conditions.

2. A tabular computer printout of equipment supplied by the electrical ratings of the electrical equipment supplied by the electrical manufacturer, the calculated short-circuits currents, X/R ratios, and notes regarding the adequacy or inadequacy of the equipment.

3. A computer printout of input circuit data including cable lengths, number of cables per phase, cable impedance values, insulation types, transformer impedances, X/R ratios and other circuit information as related to the short-circuit calculations.

4. A bus-to-bus computer printout listing the maximum available short-circuit current in RMS symmetrical amperes and the X/R ratio of the fault current. This printout shall have an accompanying printout explaining how to interpret the short-circuit results.

5. A computer-generated system one-line diagram clearly identifying individual equipment buses, bus numbers used in short-circuit analysis, cable and bus connections between the equipment and calculated maximum short-circuit current at each bus location.

6. A discussion section evaluating the adequacy or inadequacy of the equipment, with recommendations as required for improvements to the system.

7. Any inadequacies shall be called to the attention of the engineer and recommendations made for improvements.

8. Six (6) bound copies of the completed short-circuit analysis sealed by a Texas Licensed Professional Electrical Engineer shall be submitted for the Engineer to review.

E. Protective Device Time-Current Coordination Analysis: Prior to any electrical equipment submittals being reviewed, the Contractor shall perform a protective device time-current coordination analysis of the specified electrical power distribution system. This analysis shall include:

1. A determination of settings, ratings, or types for the over-current protective devices supplied. Where necessary, an appropriate compromise shall be made between system protection and service continuity with:

    a. System protection shall be more important than service continuity. The time current condition analysis shall be performed with the aid of a computer.

2. Computer generated log-log plots containing the time current characteristics of over-current devices. A sufficient number of log-log plots shall be provided to indicate the degree of system protection and coordination. The log-log plots shall include transformer ANSI withstand point and inrush currents of transformers where appropriate. Series rated devices shall not be acceptable.

3. Computer printouts to accompany the log-log plots containing descriptions for each of the devices shown on the plot, setting of the adjustable devices, device numbers to simplify locations of the devices on the system one-line diagram and short circuits where shown.

4. A tabular computer printout of the suggested settings of the adjustable over-current protective devices, the equipment where the devices are located, the device number corresponding to the device on the system one-line diagram and the number of the time-current log-log graphs where they are illustrated.

5. A computer generated system one-line diagram clearly identifying individual equipment buses, the bus numbers, the device numbers and the maximum available short-circuit at each bus which shall include short-circuit current motor contributions.

6. A discussion section evaluating the degree of system protection and service continuity with over-current devices, with recommendations as required for increased protection or coordination.

7. Any inadequacies shall be called to the attention of the engineer and recommendations made for improvements.

8. Six bound copies of the completed protective device time-current coordination analysis for the engineer.

F. Over-current Device Schedule: Prior to any electrical submittals being reviewed, Contractor shall provide a schedule for each piece of equipment required by Divisions 11, 14, 21, 22, 23, 25, 27, and 28 in coordination with subcontractors providing equipment under these sections. Submittals shall reflect required coordination by having related Contractor’s signatures on the submittals. This means that electrical requirement for chiller as an example, shall be coordinated by BOTH Electrical and Mechanical subcontractors, and Over-Current Device Schedule submitted shall be signed by both Contractors. For each piece of equipment actually supplied, the schedule shall indicate the full load amps (FLA), the minimum circuit amps (MCA), and the maximum over-current protection device (MOCPD). The schedule shall also indicate if the equipment is required to be protected by fuses only, thermal magnetic breaker only, HACR breakers only or any combination thereof. It shall also indicate if the equipment requires single point or multiple point of connections and hoe the Contractor is proposing to meet the requirements if different than construction documents. It shall explicitly indicate the required number of conductors, disconnect switch sizes and numbers (if required), and acceptable conduit sizes and number. These modifications shall be reflected in the electrical equipment submittal. Required changes shall be made at no cost to the Owner.

G. After the coordination drawings, short circuit analysis coordination analysis and over-current device schedule are submitted, the products in Division 26 shall be submitted in the groups identified below. By submitting shop drawings on the project, this Contractor is indicating that all necessary coordination has been completed and that the systems, products and equipment submitted can be installed in the building and will operate as specified and intended, in full coordination with all other trades. Submittals for each group will be returned without review unless all sections are included. Sections will not be reviewed separately. At the Engineer's discretion, when a re-submittal is required for one section, any other sections within each group may require re-submittal. Contractor shall expedite submittals and re-submittals as required to allow for the Engineer's review time specified in Division 1. The groups of equipment shall be divided as follows:

1. Raceways, Conductors and Miscellaneous Equipment

a. Fire stopping

b. Conduit

c. Raceways, Multi-outlet Assemblies, Wireways and Auxiliary Gutters

d. Wires and Cables

e. Outlet Boxes

f. Wiring Devices

g. Cabinets and Enclosures

h. Grounding and Bonding

i. Supporting Devices

j. Electrical Identification

k. Lightning Protection Systems

2. Distribution Equipment

a. Distribution Switchboards

a. Enclosed Switches

b. Dry Type Transformers

c. Distribution Panelboards

d. Branch Circuit Panelboards

e. Enclosed Motor Controllers

f. Motor Control Center

g. Variable Speed Drives

3. Electrical Controls

4. Lighting Fixtures

a. Interior and Building Lighting Fixtures

5. Specialty Systems

a. Transient Voltage Surge Suppression

a. Fire Alarm System

b. Intercom System

c. Cable TV System

d. Local sound reinforcement System

6. Testing

a. Field Electrical Testing

H. Shop Drawings: Prepare electrical shop drawings to accurate scale except where diagrammatic representations are specifically indicated. Show clearance dimensions of critical locations, and show dimensions of spaces required for operation and maintenance of equipment. Show conduit layouts and wire/cable connections and other electrical service connections and show interfaces with other work, including structural support. Indicate by note, portions of electrical work shown on shop drawings which deviates from indication of work in contract documents, and explain reasons for deviations. Show how such deviations coordinate with interfacing deviations on shop drawings for other portions of work, currently or previously submitted. Show wiring diagrams, erection, setting, weights, capacities, speeds, outputs, consumption, efficiencies, voltages, amperages, hertz, phases, noise levels, etc.

I. Samples: Engineer's review of required sample submittals will be limited to observation of general type, pattern, and finish; and will not include testing and inspection of submitted samples, except for those specifically indicated for that purpose in the contract documents. Compliance with specified requirements remains the exclusive responsibility of the Contractor.

J. Manufacturer's Data: Where pre-printed data covers more than one distinct product, size, type, material, trim, accessory group or other variation, mark submitted copy with black pen to indicate which variations are to be provided. Delete or mark-out all portions or pre-printed data which are not applicable. Where operating ranges are shown, mark data to show portions of range required for project application. Expansion or elaboration of standard data to describe non-standard product must be processed as shop drawing data to describe non-standard product. For each product include manufacturer's production specifications, installation or fabrication instructions, nearest source of supply (including telephone number), sizes, weights, speeds, operating characteristics, ratings, conduit and wire/cable connection sizes and locations, statements of compliance with required standard and governing regulations (include manufacturer's signed statements if not covered in printed data), performance data (where applicable) and similar information needed to confirm compliance with requirements.

K. Manufacturer's Certification: Each manufacturer is required to review the system design as related to the proper operation of his equipment, including electrical requirements, automatic controls, mechanical systems and equipment locations and related items. With shop drawings submit a letter from the manufacturer stating that his equipment will operate satisfactorily under the design conditions. The manufacturer's representative shall review the final installation at the site and submit a second letter stating that the equipment operates satisfactorily as installed. Furnish certification for the systems listed in each section of Division 26.

1. Test Reports: The Contractor for various sub-systems shall submit proposed testing procedure for their system, subject to review and approval and owner acceptance. The contract will not be declared to be substantially complete until the functional operation of the subsystems have been demonstrated and verified and reports have been provided, reviewed and accepted. The project will not be declared substantially complete until the following has taken place:

2. The "As-Built" drawings have been submitted, reviewed, and accepted by OWNER CM-PA/Bond Office.

3. The various systems have been commissioned and accepted. This will include the following systems:

    a. Building Fire Alarm System

    b. Clock System

    c. Television Distribution System

    d. Building Computer Network

    e. Surveillance and Security System

    f. Intercom/Telephone

L. Submit test report signed and dated by firms performing test, and prepare in manner specified in standard or regulation governing test procedure as indicated. Provide notarized executions on test reports.

M. Warranties: Refer to Division 1 for procedures and submittal requirements for warranties. Refer to individual equipment specifications for warranty requirements. A minimum of one-year warranty period is required for all materials and equipment. Warranty period starts upon first beneficial use or acceptance by OWNER whichever comes first.

1. Provide complete warranty information for each item to include product or equipment to include date of beginning of warranty or bond; duration of warranty or bond; names, addresses and telephone numbers and procedures for filing a claim and obtaining warranty services.

2. Where pre-printed and published warranty includes substantial deviation from required warranty (as judged by Engineer), product is automatically disqualified from use on project, except where manufacturer prepares and issues specific project, warranty on product, stating that it is in lieu of published warranty, and is executed by authorized officer, and complies with requirements.

N. Load Current and Overload Relay Heater List: Compiled by Contractor after motors have been installed. Arrange to demonstrate selection of heaters to suit actual motor nameplate full load currents.

1.05 RECORD DOCUMENTS

A. Prepare record documents in accordance with the requirements in Division 1. In addition to the requirements specified in Division 1, indicate installed conditions for:

1. Major raceway systems, size and location, for both exterior and interior; locations of control devices; distribution and branch electrical circuitry; access panels; and fuse and circuit breaker size and arrangements.

1. Equipment locations (exposed and concealed), dimensioned from prominent building lines.

2. Approved substitutions, Contract Modifications, and actual equipment and materials installed.

3. Underground cabling and conduits both interior and exterior, drawn to scale and fully dimensioned.

4. Work concealed behind or within other work, in a non-accessible arrangement.

5. Mains and branches of wiring/cabling systems, with switchboards, panelboards, and control equipment and devices located and numbered with terminals and connections located, and with equipment requiring maintenance located.

6. Grounding systems including primary, secondary and special.

B. Execution: Each installer or other entity responsible for recording installed work shall record firm name, signature and date on each drawing so marked.

C. Prior to transmittal of corrected drawings, obtain three (3) sets of blue-line prints of each drawing in each set, regardless of whether corrections were necessary, and include in transmittal (two (2) sets are for Owner's use, and one (1) is for Engineer's records).

1.06 OPERATING AND MAINTENANCE MANUALS

A. Prepare maintenance manuals in accordance with Division 1. In addition to the requirements specified in Division 1, provide the following.

B. Submit sets prior to final inspection, in electronic PDF format.

C. Contents:

1. Directory, listing names, addresses, and telephone numbers of Architect/Engineer, Contractor, Subcontractor, and major equipment suppliers.

1. Operation and maintenance instructions, arranged by system.

2. Project documents and certificates.

3. Description of function, normal operating characteristics and limitations, performance curves, engineering data and tests, and complete nomenclature and commercial numbers of replacement parts.

4. Manufacturer's original printed operating procedures to include start-up, break-in, and routine and normal operating instructions; regulation, control, stopping, shutdown, and emergency instructions; and summer and winter operating instructions. (Copies are not acceptable).

5. Maintenance procedures for routine preventative maintenance and troubleshoot; disassembly, repair, and re-assembly; aligning and adjusting instructions.

6. Servicing instructions and lubrication charts and schedules.

7. Warranty information including any corrections made during submittals.

8. Replacement parts list.

9. List of tools and accessories needed for maintenance.

1.07 COORDINATION

A. Coordinate arrangement, mounting, and support of electrical equipment:

1. To allow maximum possible headroom unless specific mounting heights that reduce headroom are indicated.

1. To provide for ease of disconnecting the equipment with minimum interference to other installations.

2. To allow right of way for piping and conduit installed at required slope.

3. So connecting raceways, cables, wireways, cable trays, and busways will be clear of obstructions and of the working and access space of other equipment.

B. Coordinate installation of required supporting devices and set sleeves in cast-in-place concrete, masonry walls, and other structural components as they are constructed.

C. Coordinate location of access panels and doors for electrical items that are behind finished surfaces or otherwise concealed. Access doors and panels are specified in Division 08 Section "Access Doors and Frames."

D. Coordinate sleeve selection and application with selection and application of firestopping specified in Division 07 Section "Penetration Firestopping."

PART 2 - PRODUCTS

2.01 GENERAL MANUFACTURER QUALIFICATION

A. Production Experience: For all electrical equipment, manufacturer shall be firm with not less than five (5) years successful production experience. Experience means production of units similar to those required, as judged by Engineer. Comply with longer-period experience requirements specified in other Division 26 sections of these Specifications. Product shall be new and design for quiet, vibration free operation.

2.02 GENREAL ELECTRICAL PRODUCT REQUIREMENTS

A. Standard Products: Provide not less (quality) than manufacturer's standard products as specified by published product data. Do not assume that available off-the-shelf condition of product complies with requirements; as example, specific finish or color may be required.

B. Unencumbered Purchases: Avoid purchases and use of products which are encumbered with questionable title transfers, patent rights, trade union restrictions, code compliance, non-listings as "approved products" for compliance with governing regulations, duties due, embargoes and similar possible encumbrances, claims or seller's interest.

1. Purchasing: Do not purchase specific electrical materials and equipment for project until completion of submittals.

C. Condition of Products: Except as otherwise indicated, provide new electrical products, free of defects and harmful deterioration at time of installation. Do not use units, which have been subjected to destructive testing, or other high-limits testing except where pre-tested products are specified. Comply with Division 1 requirements for exposure or visual display limitations against trademarks and manufacturer's names. Provide each product complete with trim, accessories, finish, guards, safety devices and similar components specified or recognized as integral parts of products, or required by governing regulations.

D. Assembly and Testing: To greatest extent possible and unless otherwise indicated, complete fabrication, assembly, finishing and testing of products prior to delivery to project. Notify Engineer not less than one week in advance of pre-installation testing to be performed in response to project requirements. Engineer reserves right to be present at tests of electrical products; however, neither their absence nor presence relieves the Contractor of responsibility for compliance with requirements.

E. Uniformity: Where multiple units of generic product are required for single major system of electrical work, e.g., cable trays, lighting systems, provide identical products by same manufacturer, without variations.

1. Limitations: Product/manufacturer uniformity does not apply to conduit and fittings, 600V electrical wire, sheet metal, steel bar stock, welding rods, solder, factory applied paint between different systems, fasteners, motors for unalike equipment units, and similar items used in work, and except as otherwise indicated.

F. Product Compatibility, Options: Where more than one product selection is specified, selections are Purchaser's or Installer's options, except do not provide products which are not compatible with previously purchased or installed products which must interface with selections. Provide electrical adaptations as needed for interfacing of selected products in work.

G. Quality Assurance: Provide products listed by and installed in accordance with all references in each section under quality assurance any other applicable requirements.

H. Elevation Requirements: Electrical equipment provided shall perform at mean elevation of 1000 feet above sea level.

I. Listing: Provide products that are listed by a NRTL.

2.03 SLEEVES FOR RACEWAYS AND CABLES

A. Retain one of first two paragraphs below for penetrations through exterior walls above and below grade.

B. Steel Pipe Sleeves: ASTM A 53/A 53M, Type E, Grade B, Schedule 40, galvanized steel, plain ends.

C. Cast-Iron Pipe Sleeves: Cast or fabricated "wall pipe," equivalent to ductile-iron pressure pipe, with plain ends and integral water-stop, unless otherwise indicated.

D. Sleeves for Rectangular Openings: Galvanized sheet steel.

1. Minimum Metal Thickness:

a. For sleeve cross-section rectangle perimeter less than 50 inches and no side more than 16 inches, thickness shall be 0.052 inch.

b. For sleeve cross-section rectangle perimeter equal to, or more than, 50 inches and 1 or more sides equal to, or more than, 16 inches, thickness shall be 0.138 inch.

2.04 SLEEVE SEALS

A. Description: Modular sealing device, designed for field assembly, to fill annular space between sleeve and raceway or cable.

2.05 GROUT

A. Nonmetallic, Shrinkage-Resistant Grout: ASTM C 1107, factory-packaged, nonmetallic aggregate grout, noncorrosive, non-staining, mixed with water to consistency suitable for application and a 30-minute working time.

PART 3 - EXECUTION

3.01 GENERAL ELECTRICAL INSTALLATIONS

A. The Contractor shall provide all necessary items for a complete operating system.

B. Provide all electrical systems required by and in accordance with Division 26.

C. Perform work for other divisions as required for electrical installations or coordinate such work with other trades which includes but is not necessarily limited to:

1. Division 1: Cutting and Patching, Temporary Controls, Submittals, Facility Start-up, Contract Close Out, Record Documents, etc.

2. Division 2: Trenching, Backfilling, Compaction, Demolition, etc.

3. Division 3: Concrete Formwork.

4. Division 5: Metal Fabrications.

5. Division 6: Rough Carpentry.

6. Division 7: Joint Sealers and Fire Stopping

7. Division 8: Electric Door Hardware and Access Doors

a. Deviation: Contractor is encouraged to coordinate and combine electrical access with mechanical access, and has the option to not add electrical access panels if acceptable coordination can be achieved.

8. Division 9 - Painting: In addition to Division 9, paint electrical equipment factory applied paint surfaces damaged during installation with paint purchased from equipment manufacturer to match each damaged surface.

9. Divisions 11 and 13: Laboratory Furniture, Electronic Systems, Intercoms, etc.

10. Division 15 for motors, controls, accessories, and connections.

D. Verify all dimensions by field measurements.

E. Arrange for chases, sleeve, slots, and openings in other building components during progress of construction, to allow for electrical installations.

F. Coordinate the installation of required supporting devices and sleeves to be set in poured-in-place concrete and other structural components, as they are constructed.

G. Where mounting heights or locations are not detailed or dimensioned, install systems, materials, and equipment to provide the maximum headroom and working clearances possible, but not less than required by Code.

H. Install systems, materials, and equipment to conform with approved submittal data, including coordination drawings and manufacturer's instructions, to greatest extent possible. Conform to arrangements indicated by the Contract Documents, recognizing that portions of the Work are shown only in diagrammatic form. Where coordination requirements conflict with individual system requirements, refer conflict to the Architect.

I. Install systems, materials, and equipment level and plumb, parallel and perpendicular to other building systems and components, where installed exposed in finished spaces.

J. Install electrical equipment to facilitate servicing, maintenance, and repair or replacement of equipment components. As much as practical, connect equipment for ease of disconnecting, with minimum of interference with other installations.

K. Install J-boxes for all other equipment requiring access or maintenance, which are concealed behind surfaces so that these devices can be serviced from the access panels. Where practical, group J-boxes and equipment so that they can be accessed from the same panel or door. If additional panels are needed, panels must be submitted for approval.

L. Cut, remove and legally dispose of selected electrical equipment, components, and materials, including but not limited to removal of electrical items indicated to be removed and items made obsolete by the new work.

M. The A/E reserves the right to make relocations up to 6 feet of outlets, boxes, cabinets, lighting, etc. before finished rough-in at no cost to the Owner.

N. Contractor shall notify design prime consultant and associated owner representative when he requests an inspection by the City Inspector.

3.02 COMMON REQUIREMENTS FOR ELECTRICAL INSTALLATIONS

A. Comply with NECA 1.

B. Measure indicated mounting heights to bottom of unit for suspended items and to center of unit for wall-mounting items.

C. Headroom Maintenance: If mounting heights or other location criteria are not indicated, arrange and install components and equipment to provide maximum possible headroom consistent with these requirements.

D. Equipment: Install to facilitate service, maintenance, and repair or replacement of components of both electrical equipment and other nearby installations. Connect in such a way as to facilitate future disconnecting with minimum interference with other items in the vicinity.

E. Right of Way: Give to piping systems installed at a required slope.

3.03 SLEEVE INSTALLATION FOR ELECTRICAL PENETRATIONS

A. Electrical penetrations occur when raceways, cables, wireways, cable trays, or busways penetrate concrete slabs, concrete or masonry walls, or fire-rated floor and wall assemblies.

B. Concrete Slabs and Walls: Install sleeves for penetrations unless core-drilled holes or formed openings are used. Install sleeves during erection of slabs and walls.

C. Use pipe sleeves unless penetration arrangement requires rectangular sleeved opening.

D. Fire-Rated Assemblies: Install sleeves for penetrations of fire-rated floor and wall assemblies unless openings compatible with firestop system used are fabricated during construction of floor or wall.

E. Cut sleeves to length for mounting flush with both surfaces of walls.

F. Extend sleeves installed in floors 2 inches above finished floor level.

G. Size pipe sleeves to provide 1/4-inch annular clear space between sleeve and raceway or cable, unless indicated otherwise.

H. Seal space outside of sleeves with grout for penetrations of concrete and masonry

1. Promptly pack grout solidly between sleeve and wall so no voids remain. Tool exposed surfaces smooth; protect grout while curing.

I. Interior Penetrations of Non-Fire-Rated Walls and Floors: Seal annular space between sleeve and raceway or cable, using joint sealant appropriate for size, depth, and location of joint. Comply with requirements in Division 07 Section "Joint Sealants".

J. Fire-Rated-Assembly Penetrations: Maintain indicated fire rating of walls, partitions, ceilings, and floors at raceway and cable penetrations. Install sleeves and seal raceway and cable penetration sleeves with firestop materials. Comply with requirements in Division 07 Section "Penetration Firestopping."

K. Roof-Penetration Sleeves: Seal penetration of individual raceways and cables with flexible boot-type flashing units applied in coordination with roofing work.

L. Aboveground, Exterior-Wall Penetrations: Seal penetrations using steel pipe sleeves and mechanical sleeve seals. Select sleeve size to allow for 1-inch annular clear space between pipe and sleeve for installing mechanical sleeve seals.

M. Underground, Exterior-Wall Penetrations: Install cast-iron pipe sleeves. Size sleeves to allow for 1-inch annular clear space between raceway or cable and sleeve for installing mechanical sleeve seals.

3.04 SLEEVE-SEAL INSTALLATION

A. Install to seal exterior wall penetrations.

B. Use type and number of sealing elements recommended by manufacturer for raceway or cable material and size. Position raceway or cable in center of sleeve. Assemble mechanical sleeve seals and install in annular space between raceway or cable and sleeve. Tighten bolts against pressure plates that cause sealing elements to expand and make watertight seal.

3.05 FIRESTOPPING

A. Apply firestopping to penetrations of fire-rated floor and wall assemblies for electrical installations to restore original fire-resistance rating of assembly. Firestopping materials and installation requirements are specified in Division 07 Section "Penetration Firestopping."

3.06 PRODUCT DELIVERY, STORAGE AND HANDLING

A. Protection and Identification: Deliver products to project properly identified with names, model numbers, types, grades, compliance labels and similar information needed for distinct identification; adequately packaged or protected to prevent deterioration during shipment, storage and handling. Store in dry, well ventilated, indoor space, except where prepared and protected by manufacturer specifically for exterior storage.

3.07 DAMAGED EQUIPMENT

A. The following will be rejected (even after final installation) and must be replaced with same as original at no cost to Owner:

1. Dented, deformed, stepped-on, or otherwise physically damaged enclosures.

2. Stripped cover plate screws and the holes they screw into.

3. Door hinges that do not operate smoothly.

B. The following will require field repair to original condition:

1. Minor scratches to equipment enclosure finishes.

3.08 TEMPORARY WIRING

A. The electrical Contractor shall arrange for and provide all necessary equipment, outlets, temporary lights, metering and communications as required during the construction period for temporary electrical service to the project.

B. It shall be the responsibility of the electrical Contractor to consult with all other trades on the project in order to determine the voltage of temporary electrical service required to operate the construction equipment to be employed and to provide such services to the project.

C. It shall be the responsibility of the electrical Contractor to make all arrangements for, and to furnish and install, any and all temporary wiring, switches, and structures which may be required to maintain service continuity during the entire construction period. Temporary power and lights shall be UL listed and shall include a ground wire, a guard and a proper means of support.

D. All temporary installations shall be performed in accordance with the current edition of the National Electrical Code. All machinery and equipment powered by electricity shall have effective electrical equipment grounding provided with all electrical circuits.

3.09 UTILITIES

A. This Contractor shall examine the site and shall verify, to his own satisfaction, the location and elevation of all utilities, and shall adequately inform himself as to their relation to the work before entering into a contract.

B. Existing utility lines shown within the scope of this project to be abandoned or removed shall be performed as directed by the Owner, and/or utility companies.

C. Existing utility lines not shown on the drawings but encountered during construction shall be protected, relocated or capped as directed by the Owner, and/or utility companies. All precautions shall be exercised to prevent damage to existing lines not shown, but should work become necessary, it must be authorized prior to execution except in an emergency situation.

D. Before beginning excavations of any nature whatsoever, the Contractor shall make an attempt to locate all underground utilities of every nature occurring within the bounds of the area to be excavated. The Contractor shall then proceed with caution in his excavation work so that no utility shall be damaged with a resultant loss of service.

E. Should any damage result to any utility through the Contractor's negligence or failure to comply with the above directive, he will be liable for such damage and for all expense incurred in the expeditious repair or replacement of such damaged utilities.

F. Repair of damaged utilities shall be to a condition equal to or better than the adjacent undamaged portion of such utility and to the complete satisfaction of the Owner and/or utility companies.

3.10 EXCAVATION

A. The Contractor shall perform all excavation of every description and of whatever substances encountered, to the depths indicated and/or required for the installation of all portions of the utilities systems. All excavated materials not required for fill or backfill shall be removed. All excavation shall be made by open cut. The banks of trenches shall be kept as nearly vertical as practicable and where required shall be properly shored and braced. Trenches shall be at least 12" wider and not more than 16" wider than the outside diameter of the conduit, and shall be excavated true to line so that a clear space greater than 6" and less than 8" in width is provided on each side of the conduit or duct bank.

B. Except at locations where the excavation of rock from bottom of trenches is required, care shall be taken not to excavate below the depths indicated. Where rock excavation is required, the rock shall be excavated to a minimum over-depth of 4" below the trench depths indicated on the drawings or as specified. The over-depth rock excavation shall be back-filled with loose, moist earth and thoroughly tamped.

C. Whenever wet or otherwise unstable soil that is incapable of supporting the conduit duct bank, pole base or pad is encountered in the trench bottom, such soil shall be removed to a depth required. The trench bottom shall be filled with course sand, fine gravel, or other suitable material.

D. Backfill with earth under pole bases, pads or other buried structures will not be permitted, and any unauthorized excess excavation below the levels indicated for foundation of such structures shall be filled with sand, gravel or concrete at the expense of the Contractor.

E. All grading in the vicinity of excavations shall be controlled to prevent surface ground water from flowing into the excavations. Any water accumulated in the excavations shall be removed by pumping or by other approved method. During excavation, material suitable for backfilling shall be stacked in an orderly manner a sufficient distance back from the edges of trenches to avoid overloading and to prevent slides or cave-ins.

3.11 BACK-FILLING

A. Trenches shall not be back filled until all required tests are performed and until the utilities systems as installed conform to the requirements specified.

B. Trenches shall be carefully back filled with the excavated materials approved for back filling. This material shall consist of earth, loam, sandy clay, sand and gravel, soft shale, or other approved materials, free from large clods of earth or stones, deposited in thoroughly and carefully tamped 6" layers, until the conduit has a cover as specified. Broken rock, broken concrete or pavement, and large boulders shall not be used as backfill material.

C. Settling the backfill with water will be permissible and will be a requirement when so directed.

D. Any trenches across roadways or other areas to be paved shall be back filled with flowable fill (CLSM) or approved equal (ashes combined with concrete) in such manner as to permit the rolling and compaction of the filled trench. Together with the adjoining earth, shall provide required bearing value so that paving of the area can proceed immediately after the backfilling is completed.

3.12 CLOSEOUT PROCEDURES

A. General Coordination: Refer to Division 01 sections and individual Specification sections for coordination of electrical closeout work with variable loads on electrical system. Coordinate taking of final photographs (if any) with electrical closeout, so that maximum detail of work as finally accepted is shown. Sequence closeout procedures properly, so that work will not be endangered or damaged, and so that every required performance with be fully tested and demonstrated.

B. System Performance Test Runs: Coordinate test runs of electrical systems with test runs of equipment served thereby (heating, air conditioning, plumbing, etc.). Check each item in each system to determine that it is set for proper operation. With Owner's Representative and Engineer present, operate each system in test run of appropriate duration to demonstrate compliance with performance requirements. During or following test runs, make final corrections or adjustments of systems to refine and improve performances where possible, including noise and vibration reductions, elimination of hazards, better response of controls, signals and alarms, and similar system performance improvements. Provide testing or inspection devices as may be reasonably requested for Engineer's observation of actual system performances. Demonstrate that controls and items requiring service or maintenance are accessible.

C. Cleaning and Lubrication: After final performance test run of each electrical system, clean system both externally and internally. Comply with manufacturer's instructions for lubrication of both power and hand-operated equipment, and remove excess lubrication. Touch-up minor damage to factory-painted finishes and other painting specified as electrical work; refinish work where damage is extensive.

D. General Operating Instructions: In addition to specific training of Owner's operating personnel specified in individual Division 26 work sections, and in addition to preparation of written operating instructions and compiled maintenance manuals specified in Division-26 Sections and elsewhere in these specifications, provide general operating instructions for each operational system and equipment item of electrical work. Coordinate instructions with instructions for mechanical work, elevators and other equipment where associated with electrical systems or equipment.

1. Describe each basic electrical system and functioning of its control system.

2. Explain identification system, mimic diagrams, signals, actuators, sensors, alarms, telecommunication systems, and similar audio/visual provisions.

3. Describe interfaces with mechanical equipment, including interlocks, sequencing, start-up, shut down, emergency, safety, system failure, security and similar provisions.

4. Outline basic maintenance procedures and major equipment turnaround requirements, including adjustments to optimize output and efficiency of electrical system.

5. Display and conduct "thumb-through" explanation of maintenance manuals, record drawings, spare part inventory, storage of extra materials, meter readings and similar service items.

E. Construction Equipment: After completion of performance testing and Owner's operating instructions and demonstrations, remove installer's tools, test facilities, construction equipment and similar devices and materials used in execution of work but not incorporated in work.

F. Security and Protection: During electrical work closeout phase, meet with Owner's operating representative frequently (daily where necessary) and agree upon status of operational responsibility for electrical systems (including securing provisions to prevent unauthorized operations, and including protective measures to ensure that systems are not neglected or misused.

PART 4 - CONTINUED SYSTEM OPERATIONS

A. Acceptance and Continued Services: Coordinate Owner's take-over of electrical systems with take-over of mechanical systems, including the provision of skilled electrical operating and maintenance personnel until time Owner's personnel take over operation of entire mechanical and electrical plant. Contractor shall continue consultation and services (beyond take-over date) for electrical systems, matching required continued services on associated mechanical systems and equipment.

END OF SECTION 26 05 00

26 05 19

LOW-VOLTAGE ELECTRICAL POWER CONDUCTORS AND CABLES

PART 1 - GENERAL

1.01 RELATED DOCUMENTS

A. Drawings and general provisions of the Contract, including General and Supplementary Conditions and Division 01 Specification Sections, apply to this Section.

1.02 SUMMARY

A. This Section includes the following:

1. Building wires and cables rated 600V and less.

2. Connectors, splices, and terminations rated 600V and less.

3. Sleeves and sleeve seals for cables.

B. Related Sections include the following:

1.03 DEFINITIONS

A. Retain abbreviations that remain after this Section has been edited.

B. EPDM: Ethylene-propylene-dieneterpolymer rubber.

C. NBR: Acrylonitrile-butadiene rubber.

D. MCM: Thousand circular-mils.

1.04 SUBMITTALS

A. Product Data: For each type of product indicated.

B. Coordinate paragraph below with qualification requirements in Division 01 Section "Quality Requirements" and as supplemented in "Quality Assurance" Article.

C. Qualification Data: For testing agency.

D. Retain paragraph below if Contractor is responsible for field quality-control testing.

E. Field quality-control test reports.

1.05 QUALITY ASSURANCE

A. Retain first paragraph and subparagraph below if Contractor is required to provide services of an independent testing agency in Part 3 "Field Quality Control" Article. Qualification requirements supplement those specified in Division 01 Section "Quality Requirements", which also includes the definition for NRTL.

B. Testing Agency Qualifications: An independent agency, with the experience and capability to conduct the testing indicated, that is a member company of the International Electrical Testing Association or is a nationally recognized testing laboratory (NRTL) as defined by OSHA in 29 CFR 1910.7, and that is acceptable to authorities having jurisdiction.

1. Testing Agency's Field Supervisor: Person currently certified by the International Electrical Testing Association or the National Institute for Certification in Engineering Technologies to supervise on-site testing specified in Part 3.

C. Electrical Components, Devices, and Accessories: Listed and labeled as defined in NFPA 70, Article 100, by a testing agency acceptable to authorities having jurisdiction, and marked for intended use.

D. Comply with NFPA 70.

E. UL Compliance: Provide components which are listed and labeled by UL under the following standards.

1. UL Std. 83 - Thermoplastic-Insulated Wires and Cables.

2. UL Std. 4 - Armored Cable

3. UL Std. 1569 - Metal-Clad Cables

4. UL Std. 486A - Wire Connectors and Soldering Lugs for Use with Copper Conductors.

5. UL 13 - Power limited circuit cables.

6. UL 1666 - Test for flame propagation height of electrical and optical-fiber cables installed vertically in shafts.

7. UL 910 - Test for flame propagation and smoke density values for and optical fiber cables used in spaces environmental air.

8. UL 1685 - Vertical tray fire propagation and smoke release test for and optical fiber cables.

F. NEMA WC-5: Thermoplastic-insulated wire and cable for the transmission and distribution of electrical energy.

G. Federal Specifications

1. J-C-30B (1) cable and wire, electrical (power, fixed installation).

1.06 COORDINATION

A. Set sleeves in cast-in-place concrete, masonry walls, and other structural components as they are constructed.

PART 2 - PRODUCTS

2.01 CONDUCTORS AND CABLES

A. Manufacturers, 600 Volt or Less Wire and Cable: Subject to compliance with requirements, provide products by one of the following:

1. Carol

2. South wire.

3. Triangle PCW

4. American Insulated Wire Corp

5. BFCC Brand

6. Senator Wire and Cable

7. Encore Wire Corporation

B. Copper Conductors: Comply with NEMA WC 70.

C. Conductor Insulation: Comply with NEMA WC 70 for Types THW, THHN-THWN, XHHW, UF, USE and SO. All conductors are to be Copper wire or cable insulated for 600 V, color coded for the entire length. Use of electrical tape for marking is strictly prohibited.

1. Conductors shall be provided with insulation types indicated explicitly on drawings, and substitution is NOT acceptable without Engineer's approval.

2. Wiring BX and MC will not be acceptable for use on this project. MC may be used for light fixture whips only.

3. Where insulation type is not explicitly identified on drawings, branch circuit and feeder circuit conductors shall have THHN-THWN dual-rated insulation.

D. Multi-conductor Cable: Comply with NEMA WC 70 for armed cable, Type AC, metal clad cable, Type MC, mineral-insulated, sheathed cable, Type MI with ground wire.

2.02 CONNECTORS AND SPLICES

A. Available Manufacturers: Subject to compliance with requirements, manufacturers offering products that may be incorporated into the Work include, but are not limited to, the following:

B. Manufacturers: Subject to compliance with requirements, provide products by one of the following:

1. AFC Cable Systems, Inc.

2. Hubbell Power Systems, Inc.

3. O-Z/Gedney; EGS Electrical Group LLC.

4. 3M; Electrical Products Division.

5. Tyco Electronics Corp.

C. Description: Factory-fabricated connectors and splices of size, ampacity rating, material, type, and class for application and service indicated.

2.03 SLEEVES FOR CABLES

A. Steel Pipe Sleeves: ASTM A 53/A 53M, Type E, Grade B, Schedule 40, galvanized steel, plain ends.

B. Cast-Iron Pipe Sleeves: Cast or fabricated "wall pipe," equivalent to ductile-iron pressure pipe, with plain ends and integral water stop, unless otherwise indicated.

C. Sleeves for Rectangular Openings: Galvanized sheet steel with minimum 0.052- or 0.138-inch thickness as indicated and of length to suit application.

D. Coordinate sleeve selection and application with selection and application of firestopping specified in Division 07 Section "Penetration Firestopping."

2.04 SLEEVE SEALS

A. Manufacturers: Subject to compliance with requirements, provide products by one of the following:

B. Basis-of-Design Product: Subject to compliance with requirements, provide a comparable product by one of the following:

1. Advance Products & Systems, Inc.

2. Calpico, Inc.

3. Metraflex Co.

4. Pipeline Seal and Insulator, Inc.

C. Description: Modular sealing device, designed for field assembly, to fill annular space between sleeve and cable.

PART 3 - EXECUTION

3.01 CONDUCTOR MATERIAL APPLICATIONS

A. Copper:

1. Solid for #10 AWG and smaller;

2. Stranded for #8 AWG and larger.

B. Aluminum:

1. Use only for distribution or service feeders where explicitly indicated on Drawings.

2. Use AA-8030 alloy only.

3. Stranded only

4. Minimum size: 250 MCM.

5. Provide compression lugs.

3.02 CONDUCTOR INSULATION AND MULTICONDUCTOR CABLE APPLICATIONS AND WIRING METHODS

A. Service Entrance: Type XHHW-2 single conductors in raceway, unless specifically noted otherwise on Drawings.

B. Feeders to Switch Boards, Distribution-Class Panels, and Motor Control Centers located in central plant or main electrical room: Type XHHW-2 single conductors in raceway, unless specifically noted otherwise on Drawings.

C. Feeders to Distribution-Class Panels, Lighting-Class Panels, and distribution equipment located in any other area: Type THHN/THWN-2 dual-rated insulation conductors in raceway, unless specifically noted otherwise on Drawings.

D. Feeders to Emergency Equipment: Type RHW-2, unless specifically noted otherwise on Drawings.

E. Branch Circuits: Type THHN/THWN-2 dual-rated insulation conductors in raceway, unless specifically noted otherwise on Drawings.

1. Lighting Fixture Tails: A maximum of 6'-0" length of multi-conductor cable may be used for lighting fixture connection from above-ceiling junction boxes with Code-required support and minimum of one support point between junction box and fixture.

2. Wiring Devices: Multi-conductor cable is not acceptable for use in connection of wiring devices and associated boxes.

3. Equipment: Multi-conductor cable is not acceptable for use in connection of equipment by any Division.

F. Control Circuits: Type THHN/THWN-2 in raceway.

3.03 INSTALLATION OF CONDUCTORS AND CABLES

A. Conceal cables in finished walls, ceilings, and floors, unless otherwise indicated.

B. Use manufacturer-approved pulling compound or lubricant where necessary; compound used must not deteriorate conductor or insulation. Do not exceed manufacturer's recommended maximum pulling tensions and sidewall pressure values.

C. Use pulling means, including fish tape, cable, rope, and basket-weave wire/cable grips, that will not damage cables or raceway. Do not re-pull wires/conductors that been used. Do not use rope hitches for pulling attachment to wire or cable.

D. Install exposed cables parallel and perpendicular to surfaces of exposed structural members and follow surface contours where possible.

E. Support cables according to Division 26 Section "Hangers and Supports for Electrical Systems."

F. Identify and color-code conductors and cables according to Division 26 Section "Identification for Electrical Systems."

G. All wire shall be installed in conduit or raceways.

H. All circuits shall have a hot, neutral and green ground wire unless otherwise indicated.

I. Provide #12 conductors and #12 grounds minimum to all 20 amp devices unless otherwise indicated.

J. Provide #10 conductors and #10 grounds minimum to all 30 amp devices unless otherwise indicated.

K. Provide #10 minimum conductors for 120/208V 20 amp circuits for which the distance from the panelboard to the first device is greater than 100 feet.

L. Provide #10 minimum conductors for 277/480V 20 amp circuits for which the distance from the panelboard to the first device is greater than 200 feet and for all general lighting circuits with continuous load greater-than-or-equal-to 3.0 kVA.

M. Do not install wires in conduit until entire system of conduit and outlet boxes is permanently in place.

N. Exercise care when installing wire in conduit so as to prevent injury to the conductor insulation. Mechanical means of pulling shall not be used unless approved. Conductors shall be pulled using UL non-flammable listed lubricant when necessary. Do not re-pull wires/conductors that been used.

O. Whenever wiring leaves the conduit and terminates at a terminal board, the wiring shall be formed and laced with plastic wire ties. Conductors are to be installed neat, order and workmanlike manner and also comply per NEC 70; Article 312.

P. In the event circuits feed through outlet boxes, provide splice and pigtail for device connection, with sufficient slack to pull splice out of box at least 6 inches (for inspection). Terminate the conductors around the terminal screws not at the back of the receptacle.

Q. Coordinate cable installation with other Work.

R. Pull conductors simultaneously where more than one is being installed in same raceway.

S. Splices:

1. Branch Circuits: Keep conductor splices to a minimum.

2. Motor Branch Circuits: Splices are not allowed in motor branch circuit feeders.

3. Relocation of Existing Lighting-Class Panels: Provide splices to existing branch circuits that are active and will remain in above-ceiling junction boxes sized appropriately for the quantity of conductors. Verify existing branch circuit feeder condition and ampacity and provide new feeders where existing violations exist. Match and extend branch circuit feeders from splice to new panel location and provide new branch circuit breaker as indicated in Panel Schedules to re-feed existing load.

4. Service Entrance Feeders: Splices are not allowed in any service entrance feeder(s). All conductors must be single length.

5. Distribution Feeders: Splices are not allowed in any distribution feeder(s) including, but not limited to feeders between switch boards, distribution-class panels, lighting-class panels, motor control centers, transformers, safety switches, and motor controllers and drives.

6. Install splice and tap connectors which possess equivalent or better mechanical strength and insulation rating than conductors being spliced.

7. Use splice and tap connectors which are compatible with conductor material.

T. Provide adequate length of conductors within electrical enclosures and train the conductors to terminal points with no excess. Bundle multiple conductors, with conductors larger than no.10 AWG cabled in individual circuits. Make terminations so there is no bare conductor at the terminal.

U. Home Runs: except where specifically indicated, provide lighting branch circuit home runs with not more than three different line conductors and a common neutral in a single raceway for 4-wire, 3-phase systems.

V. Conductors may be run inn parallel in sizes 1/0 through 750 MCM where indicated and provided that all conductors of each phase are the same length and so arranged and terminated as to ensure equal division of the current between all paralleled phase conductors.

W. Feeders shall be installed in continuous pieces without splice.

X. Install a separate neutral for each circuit which serves GFCI or isolated ground receptacles.

Y. Each circuit originating from a GFCI type circuit breaker shall also have a separate neutral.

Z. Where specifically indicated, for receptacle branch circuits, provide a separate neutral conductor for each line conductor.

AA. Each circuit serving receptacles where data terminals are used shall have separate neutral.

3.04 CONNECTIONS

A. Tighten electrical connectors and terminals according to manufacturer's published torque-tightening values. If manufacturer's torque values are not indicated, use those specified in UL 486A and UL 486B. <u>Provide Documentation and records all torque terminations</u>.

B. Wiring at Outlets: Install conductor at each outlet, with at least 6 inches of slack per Section 300.14.

3.05 SLEEVE INSTALLATION FOR ELECTRICAL PENETRATIONS

A. Coordinate sleeve selection and application with selection and application of firestopping specified in Division 07 Section "Penetration Firestopping."

B. Concrete Slabs and Walls: Install sleeves for penetrations unless core-drilled holes or formed openings are used. Install sleeves during erection of slabs and walls.

C. Use pipe sleeves unless penetration arrangement requires rectangular sleeved opening.

D. Rectangular Sleeve Minimum Metal Thickness:

1. For sleeve rectangle perimeter less than 50 inches and no side greater than 16 inches, thickness shall be 0.052 inch.

2. For sleeve rectangle perimeter equal to, or greater than, 50 inches and 1 or more sides equal to, or greater than, 16 inches, thickness shall be 0.138 inch.

E. Fire-Rated Assemblies: Install sleeves for penetrations of fire-rated floor and wall assemblies unless openings compatible with firestop system used are fabricated during construction of floor or wall.

F. Cut sleeves to length for mounting flush with both wall surfaces.

G. Extend sleeves installed in floors 2 inches above finished floor level.

H. Size pipe sleeves to provide 1/4-inch annular clear space between sleeve and cable unless sleeve seal is to be installed.

I. Seal space outside of sleeves with grout for penetrations of concrete and masonry and with approved joint compound for gypsum board assemblies.

J. Interior Penetrations of Non-Fire-Rated Walls and Floors: Seal annular space between sleeve and cable, using joint sealant appropriate for size, depth, and location of joint according to Division 07 Section "Joint Sealants."

K. Fire-Rated-Assembly Penetrations: Maintain indicated fire rating of walls, partitions, ceilings, and floors at cable penetrations. Install sleeves and seal with firestop materials according to Division 07 Section "Penetration Firestopping."

L. Roof-Penetration Sleeves: Seal penetration of individual cables with flexible boot-type flashing units applied in coordination with roofing work.

M. Aboveground Exterior-Wall Penetrations: Seal penetrations using sleeves and mechanical sleeve seals. Size sleeves to allow for 1-inch annular clear space between pipe and sleeve for installing mechanical sleeve seals.

N. Underground Exterior-Wall Penetrations: Install cast-iron "wall pipes" for sleeves. Size sleeves to allow for 1-inch annular clear space between cable and sleeve for installing mechanical sleeve seals.

3.06 SLEEVE-SEAL INSTALLATION

A. Install to seal underground exterior-wall penetrations.

B. Use type and number of sealing elements recommended by manufacturer for cable material and size. Position cable in center of sleeve. Assemble mechanical sleeve seals and install in annular space between cable and sleeve. Tighten bolts against pressure plates that cause sealing elements to expand and make watertight seal.

3.07 FIRESTOPPING

A. Apply firestopping to electrical penetrations of fire-rated floor and wall assemblies to restore original fire-resistance rating of assembly according to Division 07 Section "Penetration Firestopping."

3.08 FIELD QUALITY CONTROL

A. Perform tests and inspections and prepare test reports.

B. Tests and Inspections:

1. After installing conductors and cables and before electrical circuitry has been energized, test service entrance and feeder conductors, and conductors feeding the following critical equipment and services for compliance with requirements.

2. Perform each visual and mechanical inspection and electrical test stated in NETA Acceptance Testing Specification. Certify compliance with test parameters.

3. Perform insulation resistance test for all branch and main circuit conductor. Perform test on each conductor with respect to ground and adjacent conductor. Applied potential shall be 1000 volts DC for one minute. Test values shall be evaluated and conductors with values less than 50 megohms shall be investigated. Replace any cable reading less than 1 megohm.

4. Provide torque test for all conductor terminations in transformers, switchboards; disconnect switches, panelboards, etc in accordance with NETA standards. Record test result in accordance with item D below.

5. Infrared Scanning: After Substantial Completion, but not more than 60 days after Final Acceptance, perform an infrared scan of each termination of cables and conductors No. 3 AWG and larger. Remove box and equipment covers so terminations are accessible to portable scanner.

a. Instrument: Use an infrared scanning device designed to measure temperature or to detect significant deviations from normal values. Provide calibration record for device.

b. Record of Infrared Scanning: Prepare a certified report that identifies terminations checked and that describes scanning results. Include notation of deficiencies detected, remedial action taken, and observations after remedial action.

C. Test Reports: Prepare a written report to record the following:

1. Test procedures used.

2. Test results that comply with requirements.

3. Test results that do not comply with requirements and corrective action taken to achieve compliance with requirements.

D. Remove and replace malfunctioning units and retest as specified above.

E. Cleaning:

1. Clean the area around and on top of the equipment.

END OF SECTION 26 05 19

26 05 26

GROUNDING AND BONDING FOR ELECTRICAL SYSTEMS

PART 1 - GENERAL

1.01 RELATED DOCUMENTS

A. Drawings and general provisions of the Contract, including General and Supplementary Conditions and Division 01 Specification Sections, apply to this Section.

1.02 SUMMARY

A. This Section includes methods and materials for grounding systems and equipment, plus the following special applications:

1. Underground distribution grounding.

2. Common ground bonding with lightning protection system.

1.03 SUBMITTALS

A. Product Data: For each type of product indicated.

B. Retain paragraph and subparagraphs below to require that Contractor provide drawings to locate significant grounding features. Division 01 Sections "Project Record Documents" and "Operation and Maintenance Data" require submittals to be included in those documents for use by maintenance forces throughout the life of the Project.

C. Other Informational Submittals: Plans showing dimensioned as-built locations of grounding features specified in Part 3 "Field Quality Control" Article, including the following:

1. Test wells.

2. Ground rods.

3. Ground rings.

4. Grounding arrangements and connections for separately derived systems.

5. Grounding for sensitive electronic equipment.

D. Qualification Data: For testing agency and testing agency's field supervisor.

E. Field quality-control test reports.

F. Operation and Maintenance Data: For grounding to include the following in emergency, operation, and maintenance manuals:

1. Instructions for periodic testing and inspection of grounding features at ground rings grounding connections for separately derived systems based on NFPA 70B.

a. Tests shall be to determine if ground resistance or impedance values remain within specified maximums, and instructions shall recommend corrective action if they do not.

b. Include recommended testing intervals.

c. Records documentation is required for all testing.

1.04 QUALITY ASSURANCE

A. Testing Agency Qualifications: An independent agency, with the experience, certified and capability to conduct the testing indicated, that is a member company of the International Electrical Testing Association or is a nationally recognized testing laboratory (NRTL) as defined by OSHA in 29 CFR 1910.7, and that is acceptable to authorities having jurisdiction.

1. Testing Agency's Field Supervisor: Person currently certified by the International Electrical Testing Association to supervise on-site testing specified in Part 3.

B. Electrical Components, Devices, and Accessories: Listed and labeled as defined in NFPA 70, Article 100, by a testing agency acceptable to authorities having jurisdiction, and marked for intended use.

C. Comply with UL 467 for grounding and bonding materials and equipment.

PART 2 - PRODUCTS

2.01 GROUNDING AND BONDING FOR ELECTRICAL SYSTEMS

A. Acceptable Manufacturers: Erico, Copper weld, Cad weld, Bundy

2.02 CONDUCTORS

A. Insulated Conductors: All conductors are to be Copper wire or cable insulated for 600 V,color coded for the entire length. Use of electrical tape for marking is strictly prohibited.

B. Bare Copper Conductors: Only where specifically indicated on Drawings.

1. Solid Conductors: ASTM B 3.

2. Stranded Conductors: ASTM B 8.

3. Tinned Conductors: ASTM B 33.

4. Bonding Cable: 28 kcmil, 14 strands of No. 17 AWG conductor and 1/4 inch in diameter.

5. Bonding Conductor: No. 4 or No. 6 AWG, stranded conductor.

6. Bonding Jumper: Copper tape, braided conductors, terminated with copper ferrules; 1-5/8 inches wide and 1/16 inch thick.

7. Tinned Bonding Jumper: Tinned-copper tape, braided conductors, terminated with copper ferrules; 1-5/8 inches wide and 1/16 inch thick.

C. Bare Grounding Conductor and Conductor Protector for Wood Poles:

1. No. 4 AWG minimum, soft-drawn copper.

2. Conductor Protector: Half-round PVC or wood molding. If wood, use pressure-treated fir or cypress or cedar.

D. Grounding Bus: Rectangular bars of annealed copper, 1/4 by 2 inches in cross section, unless otherwise indicated; with insulators.

2.03 CONNECTORS

A. Listed and labeled by a nationally recognized testing laboratory acceptable to authorities having jurisdiction for applications in which used, and for specific types, sizes, and combinations of conductors and other items connected.

B. Bolted Connectors for Conductors and Pipes: Copper or copper alloy, bolted pressure-type, with at least two bolts.

1. Pipe Connectors: Clamp type, sized for pipe.

C. Welded Connectors: Exothermic-welding kits of types recommended by kit manufacturer for materials being joined and installation conditions.

2.04 GROUNDING ELECTRODES

A. Ground Rods: Copper-bonded steel; 3/4 inch diameter by 10 feet length; minimum 13 mil plating thickness.

PART 3 - EXECUTION

3.01 APPLICATIONS

A. Conductors: Install solid conductor for No. 8 AWG and smaller, and stranded conductors for No. 6 AWG and larger, unless otherwise indicated.

B. Underground Grounding Conductors: Install bare tinned copper conductor, No. 2/0 AWG minimum.

1. Bury at least 24 inches below grade.

2. Duct-Bank Grounding Conductor: Bury 12 inches above duct bank when indicated as part of duct-bank installation.

C. Isolated Grounding Conductors: Green-colored insulation with continuous yellow stripe. On feeders with isolated ground, identify grounding conductor where visible to normal inspection, with alternating bands of green and yellow tape, with at least three bands of green and two bands of yellow.

D. Grounding Bus: Install in electrical and telephone equipment rooms, in rooms housing service equipment, and elsewhere as indicated.

1. Install bus on insulated spacers 1 inch, minimum, from wall 6 inches above finished floor, unless otherwise indicated.

2. Where indicated on both sides of doorways, route bus up to top of door frame, across top of doorway, down to specified height above floor, and connect to horizontal bus.

3. Install grounding conductor from main service to the grounding bus. The minimum conductor used per Article 250.

E. Conductor Terminations and Connections:

1. Pipe and Equipment Grounding Conductor Terminations: Bolted connectors.

2. Underground Connections: Welded connectors except at test wells and as otherwise indicated.

3. Connections to Ground Rods at Test Wells: Bolted connectors.

4. Connections to Structural Steel: Welded connectors.

3.02 GROUNDING UNDERGROUND DISTRIBUTION SYSTEM COMPONENTS

A. Comply with IEEE C2 grounding requirements.

B. Grounding Manholes and Handholes: Install a driven ground rod through manhole or handhole floor, close to wall, and set rod depth so 4 inches will extend above finished floor. If necessary, install ground rod before manhole is placed and provide No. 1/0 AWG bare, tinned-copper conductor from ground rod into manhole through a waterproof sleeve in manhole wall. Protect ground rods passing through concrete floor with a double wrapping of pressure-sensitive insulating tape or heat-shrunk insulating sleeve from 2 inches above to 6 inches below concrete. Seal floor opening with waterproof, non-shrink grout.

C. Grounding Connections to Manhole Components: Bond exposed-metal parts such as inserts, cable racks, pulling irons, ladders, and cable shields within each manhole or handhole, to ground rod or grounding conductor. Make connections with No. 4 AWG minimum, stranded, hard-drawn copper bonding conductor. Train conductors level or plumb around corners and fasten to manhole walls. Connect to cable armor and cable shields as recommended by manufacturer of splicing and termination kits.

D. Pad-Mounted Transformers and Switches: Install two ground rods and ground ring around the pad. Ground pad-mounted equipment and noncurrent-carrying metal items associated with substations by connecting them to underground cable and grounding electrodes. Install tinned-copper conductor not less than No. 2 AWG for ground ring and for taps to equipment grounding terminals. Bury ground ring not less than 6 inches from the foundation.

3.03 EQUIPMENT GROUNDING

A. Install insulated equipment grounding conductors with all feeders and branch circuits.

B. Install insulated equipment grounding conductors with the following items, in addition to those required by NFPA 70:

1. Feeders and branch circuits.

2. Lighting circuits.

3. Receptacle circuits.

4. Single-phase motor and appliance branch circuits.

5. Three-phase motor and appliance branch circuits.

6. Flexible raceway runs.

7. Armored and metal-clad cable runs.

8. Busway Supply Circuits: Install insulated equipment grounding conductor from grounding bus in the switchgear, switchboard, or distribution panel to equipment grounding bar terminal on busway.

9. Computer and Rack-Mounted Electronic Equipment Circuits: Install insulated equipment grounding conductor in branch-circuit runs from equipment-area power panels and power-distribution units.

C. Air-Duct Equipment Circuits: Install insulated equipment grounding conductor to duct-mounted electrical devices operating at 120 V and more, including air cleaners, heaters, dampers, humidifiers, and other duct electrical equipment. Bond conductor to each unit and to air duct and connected metallic piping.

D. Water Heater, Heat-Tracing, and Anti-frost Heating Cables: Install a separate insulated equipment grounding conductor to each electric water heater and heat-tracing cable. Bond conductor to heater units, piping, connected equipment, and components.

E. Isolated Grounding Receptacle Circuits: Install an insulated equipment grounding conductor connected to the receptacle grounding terminal. Isolate conductor from raceway and from panelboard grounding terminals. Terminate at equipment grounding conductor terminal of the applicable derived system or service, unless otherwise indicated.

F. Isolated Equipment Enclosure Circuits: For designated equipment supplied by a branch circuit or feeder, isolate equipment enclosure from supply circuit raceway with a nonmetallic raceway fitting listed for the purpose. Install fitting where raceway enters enclosure and install a separate insulated equipment grounding conductor. Isolate conductor from raceway and from panelboard grounding terminals. Terminate at equipment grounding conductor terminal of the applicable derived system or service, unless otherwise indicated.

G. Signal and Communication Equipment: For telephone, alarm, voice and data, and other communication equipment, provide No. 4 AWG minimum insulated grounding conductor in raceway from grounding electrode system to each service location, terminal cabinet, wiring closet, and central equipment location.

1. Service and Central Equipment Locations and Wiring Closets: Terminate grounding conductor on a 1/4-by-2-by-12-inch grounding bus.

2. Terminal Cabinets: Terminate grounding conductor on cabinet grounding terminal.

H. Metal Poles Supporting Outdoor Lighting Fixtures: Install grounding electrode and a separate insulated equipment grounding conductor in addition to grounding conductor installed with branch-circuit conductors.

3.04 INSTALLATION

A. Grounding Conductors: Route along shortest and straightest paths possible, unless otherwise indicated or required by Code. Avoid obstructing access or placing conductors where they may be subjected to strain, impact, or damage.

B. Common Ground Bonding with Lightning Protection System: Comply with NFPA 780 and UL 96 when interconnecting with lightning protection system. Bond electrical power system ground directly to lightning protection system grounding conductor at closest point to electrical service grounding electrode. Use bonding conductor sized same as system grounding electrode conductor and install in conduit.

C. Ground Rods: Drive rods until tops are 2 inches below finished floor or final grade, unless otherwise indicated.

1. Use same-manufacturer, matched driving tool to drive ground rods without deformation. “Mushroomed” or otherwise deformed rods will be field-rejected.

2. Replace grounding rods that are deformed at no cost to Owner.

3. Interconnect ground rods with grounding electrode conductor below grade and as otherwise indicated.

4. For grounding electrode system, install at least three rods spaced at least one-rod length from each other and located at least the same distance from other grounding electrodes, and connect to the service grounding electrode conductor.

D. Test Wells: Ground rod driven through drilled hole in bottom of handhole. Handholes are specified in Division 26 Section "Underground Ducts and Raceways for Electrical Systems," and shall be at least 12 inches deep, with cover.

1. Test Wells: Install at least one test well for each service, unless otherwise indicated. Install at the ground rod electrically closest to service entrance. Set top of test well flush with finished grade or floor.

E. Bonding Straps and Jumpers: Install in locations accessible for inspection and maintenance, except where routed through short lengths of conduit.

1. Bonding to Structure: Bond straps directly to basic structure, taking care not to penetrate any adjacent parts.

2. Bonding to Equipment Mounted on Vibration Isolation Hangers and Supports: Install so vibration is not transmitted to rigidly mounted equipment.

3. Use exothermic-welded connectors for outdoor locations, but if a disconnect-type connection is required, use a bolted clamp.

F. Grounding and Bonding for Piping:

1. Metal Water Service Pipe: Install insulated copper grounding conductors, in conduit, from building's main service equipment, or grounding bus, to main metal water service entrances to building. Connect grounding conductors to main metal water service pipes, using a bolted clamp connector or by bolting a lug-type connector to a pipe flange, using one of the lug bolts of the flange. Where a dielectric main water fitting is installed, connect grounding conductor on street side of fitting. Bond metal grounding conductor conduit or sleeve to conductor at each end.

2. Water Meter Piping: Use braided-type bonding jumpers to electrically bypass water meters. Connect to pipe with a bolted connector.

3. Bond each aboveground portion of gas piping system downstream from equipment shutoff valve.

G. Bonding Interior Metal Ducts: Bond metal air ducts to equipment grounding conductors of associated fans, blowers, electric heaters, and air cleaners. Install bonding jumper to bond across flexible duct connections to achieve continuity.

H. Grounding for Steel Building Structure: Install a driven ground rod at base of each corner column and at intermediate exterior columns at distances not more than 60 feet apart.

I. Ground Ring: Install a grounding conductor, electrically connected to each building structure ground rod and to each indicated item, extending around the perimeter of building.

1. Install tinned-copper conductor not less than No. 2/0 AWG for ground ring and for taps to building steel.

2. Bury ground ring not less than 24 inches from building foundation.

3.05 FIELD QUALITY CONTROL

A. Testing Agency: Engage a qualified testing and inspecting agency to perform the following field tests and inspections and prepare test reports:

B. Perform the following tests and inspections and prepare test reports:

1. After installing grounding system but before permanent electrical circuits have been energized, test for compliance with requirements.

2. Test completed grounding system at each location where a maximum ground-resistance level is specified, at service disconnect enclosure grounding terminal and at individual ground rods. Make tests at ground rods before any conductors are connected.

    a. Measure ground resistance not less than two full days after last trace of precipitation and without soil being moistened by any means other than natural drainage or seepage and without chemical treatment or other artificial means of reducing natural ground resistance.

    b. Perform tests by fall-of-potential method according to IEEE 81.

3. Prepare dimensioned drawings locating each test well, ground rod and ground rod assembly, and other grounding electrodes. Identify each by letter in alphabetical order, and key to the record of tests and observations. Include the number of rods driven and their depth at each location and include observations of weather and other phenomena that may affect test results. Describe measures taken to improve test results.

C. Report measured ground resistances that exceed the following values:

1. Power and Lighting Equipment or System with Capacity More Than 1000 kVA: 1 Ω.

2. Power Distribution Units or Panelboards Serving Electronic Equipment: 0.5 Ω.

3. Substations and Pad-Mounted Equipment: 0.5 Ω.

4. Manhole Grounds: 5 Ω.

D. Excessive Ground Resistance: If resistance to ground exceeds specified values, notify Engineer promptly and include recommendations to reduce ground resistance.

END OF SECTION 26 05 26THIS PAGE WAS LEFT BLANK INTENTIONALLY

26 05 29

HANGERS AND SUPPORTS FOR ELECTRICAL SYSTEMS

PART 1 - GENERAL

1.01 RELATED DOCUMENTS

A. Drawings and general provisions of the Contract, including General and Supplementary Conditions and Division 01 Specification Sections, apply to this Section.

1.02 SUMMARY

A. This Section includes the following:

1. Hangers and supports for electrical equipment and systems.

2. Construction requirements for concrete bases.

1.03 DEFINITIONS

A. Retain abbreviations that remain after this Section has been edited.

B. EMT: Electrical metallic tubing.

C. IMC: Intermediate metal conduit.

D. RMC: Rigid metal conduit.

1.04 PERFORMANCE REQUIREMENTS

A. Delegated Design: Design supports for multiple raceways, including comprehensive engineering analysis by a qualified professional engineer, using performance requirements and design criteria indicated.

B. Design supports for multiple raceways capable of supporting combined weight of supported systems and its contents.

C. Design equipment supports capable of supporting combined operating weight of supported equipment and connected systems and components.

D. Rated Strength: Adequate in tension, shear, and pullout force to resist maximum loads calculated or imposed for this Project, with a minimum structural safety factor of five times the applied force.

1.05 SUBMITTALS

A. Product Data: For the following:

1. Steel slotted support systems.

2. Nonmetallic slotted support systems.

B. Shop Drawings: Show fabrication and installation details and include calculations for the following:

1. Trapeze hangers. Include Product Data for components.

2. Steel slotted channel systems. Include Product Data for components.

3. Nonmetallic slotted channel systems. Include Product Data for components.

4. Equipment supports.

1.06 QUALITY ASSURANCE

A. Welding: Qualify procedures and personnel according to AWS D1.1/D1.1M, "Structural Welding Code - Steel."

B. Comply with NFPA 70.

1.07 COORDINATION

A. Coordinate size and location of concrete bases. Cast anchor-bolt inserts into bases. Concrete, reinforcement, and formwork requirements are specified in Division 03.

B. Coordinate installation of roof curbs, equipment supports, and roof penetrations. These items are specified in Division 07 Section "Roof Accessories."

PART 2 - PRODUCTS

2.01 SUPPORT, ANCHORAGE, AND ATTACHMENT COMPONENTS

A. Retain this Article to specify default product requirements for basic supporting devices. Items to be supported include raceways, cables, wireways, cable trays, busways, boxes, cabinets, equipment, and other electrical products. Where support materials or workmanship is unique to a particular product, specify unique features that are the exception to these default requirements in the Section that specifies the product. Coordinate specifications for supporting devices with structural engineer and with Drawings.

B. Steel Slotted Support Systems: Comply with MFMA-4, factory-fabricated components for field assembly.

1. Available Manufacturers: Subject to compliance with requirements, manufacturers offering products that may be incorporated into the Work include, but are not limited to, the following:

a. Allied Tube & Conduit.

b. Cooper B-Line, Inc.; a division of Cooper Industries.

c. ERICO International Corporation.

d. Thomas & Betts Corporation.

e. Unistrut; Tyco International, Ltd.

2. Metallic Coatings: Hot-dip galvanized after fabrication and applied according to MFMA-4.

3. Nonmetallic Coatings: Manufacturer's standard PVC, polyurethane, or polyester coating applied according to MFMA-4.

4. Painted Coatings: Manufacturer's standard painted coating applied according to MFMA

5. Channel Dimensions: Selected for applicable load criteria.

C. Nonmetallic Slotted Support Systems: Structural-grade, factory-formed, glass-fiber-resin channels and angles with 9/16-inch diameter holes at a maximum of 8 inches o.c., in at least 1 surface.

1. Available Manufacturers: Subject to compliance with requirements, manufacturers offering products that may be incorporated into the Work include, but are not limited to, the following:

2. Manufacturers: Subject to compliance with requirements, provide products by one of the following:

a. Allied Tube & Conduit.

b. Cooper B-Line, Inc.; a division of Cooper Industries.

c. Fabco Plastics Wholesale Limited.

3. Fittings and Accessories: Products of channel and angle manufacturer and designed for use with those items.

4. Fitting and Accessory Materials: Same as channels and angles except metal items may be stainless steel.

5. Rated Strength: Selected to suit applicable load criteria.

D. Raceway and Cable Supports: As described in NECA 1 and NECA 101.

E. Conduit and Cable Support Devices: Steel and malleable-iron hangers, clamps, and associated fittings, designed for types and sizes of raceway or cable to be supported.

F. Support for Conductors in Vertical Conduit: Factory-fabricated assembly consisting of threaded body and insulating wedging plug or plugs for non-armored electrical conductors or cables in riser conduits. Plugs shall have number, size, and shape of conductor gripping pieces as required to suit individual conductors or cables supported. Body shall be malleable iron.

G. Structural Steel for Fabricated Supports and Restraints: ASTM A 36/A 36M, steel plates, shapes, and bars; black and galvanized.

H. Mounting, Anchoring, and Attachment Components: Items for fastening electrical items or their supports to building surfaces include the following:

1. Powder-Actuated Fasteners: Threaded-steel stud, for use in hardened portland cement concrete, steel, or wood, with tension, shear, and pullout capacities appropriate for supported loads and building materials where used.

a. Available Manufacturers: Subject to compliance with requirements, manufacturers offering products that may be incorporated into the Work include, but are not limited to, the following:

b. Manufacturers: Subject to compliance with requirements, provide products by one of the following:

1) Hilti Inc.

2) ITW Ramset/Red Head; a division of Illinois Tool Works, Inc.

3) MKT Fastening, LLC.

4) Simpson Strong-Tie Co., Inc.; Masterset Fastening Systems Unit.

2. Mechanical-Expansion Anchors: Insert-wedge-type, steel, for use in hardened portland cement concrete with tension, shear, and pullout capacities appropriate for supported loads and building materials in which used.

a. Available Manufacturers: Subject to compliance with requirements, manufacturers offering products that may be incorporated into the Work include, but are not limited to, the following:

b. Manufacturers: Subject to compliance with requirements, provide products by one of the following:

1) Cooper B-Line, Inc.; a division of Cooper Industries.

2) Empire Tool and Manufacturing Co., Inc.

3) Hilti Inc.

4) ITW Ramset/Red Head; a division of Illinois Tool Works, Inc.

5) MKT Fastening, LLC.

3. Concrete Inserts: Steel or malleable-iron, slotted support system units similar to MSS Type 18; complying with MFMA-4 or MSS SP-58.

4. Clamps for Attachment to Steel Structural Elements: MSS SP-58, type suitable for attached structural element.

5. Through Bolts: Structural type, hex head, and high strength. Comply with ASTM A 325.

6. Toggle Bolts: All-steel springhead type.

7. Hanger Rods: Threaded steel.

2.02 FABRICATED METAL EQUIPMENT SUPPORT ASSEMBLIES

A. Description: Welded or bolted, structural-steel shapes, shop or field fabricated to fit dimensions of supported equipment.

B. Materials: Comply with requirements in Division 05 Section "Metal Fabrications" for steel shapes and plates.

PART 3 - EXECUTION

3.01 APPLICATION

A. Comply with NECA 1 and NECA 101 for application of hangers and supports for electrical equipment and systems except if requirements in this Section are stricter.

B. Maximum Support Spacing and Minimum Hanger Rod Size for Raceway: Space supports for EMT, IMC, and RMC as required by NFPA 70. Minimum rod size shall be 1/4 inch in diameter.

C. Multiple Raceways or Cables: Install trapeze-type supports fabricated with steel slotted or other support system, sized so capacity can be increased by at least 25 percent in future without exceeding specified design load limits.

1. Secure raceways and cables to these supports with two-bolt conduit clamps.

D. Spring-steel clamps designed for supporting single conduits without bolts may be used for 1-1/2-inch and smaller raceways serving branch circuits and communication systems above suspended ceilings and for fastening raceways to trapeze supports.

E. All conduits shall be installed in uniformity, neat and equal space.

3.02 SUPPORT INSTALLATION

A. Comply with NECA 1 and NECA 101 for installation requirements except as specified in this Article.

B. Raceway Support Methods: In addition to methods described in NECA 1, EMT, IMC, and RMC may be supported by openings through structure members, as permitted in NFPA 70.

C. Strength of Support Assemblies: Where not indicated, select sizes of components so strength will be adequate to carry present and future static loads within specified loading limits. Minimum static design load used for strength determination shall be weight of supported components plus 200 lb.

D. Mounting and Anchorage of Surface-Mounted Equipment and Components: Anchor and fasten electrical items and their supports to building structural elements by the following methods unless otherwise indicated by code:

1. To Wood: Fasten with lag screws or through bolts.

2. To New Concrete: Bolt to concrete inserts.

3. To Masonry: Approved toggle-type bolts on hollow masonry units and expansion anchor fasteners on solid masonry units.

4. To Existing Concrete: Expansion anchor fasteners.

5. Instead of expansion anchors, powder-actuated driven threaded studs provided with lock washers and nuts may be used in existing standard-weight concrete 4 inches thick or greater. Do not use for anchorage to lightweight-aggregate concrete or for slabs less than 4 inches thick.

6. To Steel: Welded threaded studs complying with AWS D1.1/D1.1M, with lock washers and nuts.

7. To Light Steel: Sheet metal screws.

8. Items Mounted on Hollow Walls and Nonstructural Building Surfaces: Mount cabinets, panelboards, disconnect switches, control enclosures, pull and junction boxes, transformers, and other devices on slotted-channel racks attached to substrate by means that meet seismic-restraint strength and anchorage requirements.

E. Drill holes for expansion anchors in concrete at locations and to depths that avoid reinforcing bars.

3.03 INSTALLATION OF FABRICATED METAL SUPPORTS

A. Comply with installation requirements in Division 05 Section "Metal Fabrications" for site-fabricated metal supports.

B. Cut, fit, and place miscellaneous metal supports accurately in location, alignment, and elevation to support and anchor electrical materials and equipment.

C. Field Welding: Comply with AWS D1.1/D1.1M.

3.04 CONCRETE BASES

A. Construct concrete bases of dimensions indicated but not less than 4 inches larger in both directions than supported unit, and so anchors will be a minimum of 10 bolt diameters from edge of the base.

B. Use 3000-psi, 28-day compressive-strength concrete. Concrete materials, reinforcement, and placement requirements are specified in Division 03 Section "Cast-in-Place Concrete."

C. Anchor equipment to concrete base.

1. Place and secure anchorage devices. Use supported equipment manufacturer's setting drawings, templates, diagrams, instructions, and directions furnished with items to be embedded.

2. Install anchor bolts to elevations required for proper attachment to supported equipment.

3. Install anchor bolts according to anchor-bolt manufacturer's written instructions.

3.05 PAINTING

A. Touchup: Clean field welds and abraded areas of shop paint. Paint exposed areas immediately after erecting hangers and supports. Use same materials as used for shop painting. Comply with SSPC-PA 1 requirements for touching up field-painted surfaces.

1. Apply paint by brush or spray to provide minimum dry film thickness of 2.0 mils.

B. Galvanized Surfaces: Clean welds, bolted connections, and abraded areas and apply galvanizing-repair paint to comply with ASTM A 780.

END OF SECTION 26 05 29

this page left blank intentionally

26 05 33

RACEWAY AND BOXES FOR ELECTRICAL SYSTEMS

PART 1 - GENERAL

1.01 RELATED DOCUMENTS

A. Drawings and general provisions of the Contract, including General and Supplementary Conditions and Division 01 Specification Sections, apply to this Section.

B. Requirements of Division 26 "BASIC ELECTRICAL REQUIREMENTS" apply to this section.

1.02 SUMMARY

A. This Section includes raceways, fittings, boxes, enclosures, and cabinets for electrical wiring.

B. Related Sections include the following:

1. Division 26 Section "Underground Ducts and Raceways for Electrical Systems" for exterior ductbanks, manholes, and underground utility construction.

1.03 DEFINITIONS

A. EMT: Electrical metallic tubing.

B. ENT: Electrical nonmetallic tubing.

C. EPDM: Ethylene-propylene-dieneterpolymer rubber.

D. FMC: Flexible metal conduit.

E. IMC: Intermediate metal conduit.

F. LFMC: Liquidtight flexible metal conduit.

G. LFNC: Liquidtight flexible nonmetallic conduit.

H. NBR: Acrylonitrile-butadiene rubber.

I. RNC: Rigid nonmetallic conduit.

J. RMC: Rigid metal conduit.

1. RGS: Rigid galvanized steel conduit.
2. RAL: Rigid aluminum conduit.

1.04 SUBMITTALS

A. Product Data: For surface raceways, wireways and fittings, floor boxes, hinged-cover enclosures, and cabinets.

B. Manufacturer's instructions: indicate application conditions, limitations, and maximum conductor fill.

C. Shop Drawings: For the following raceway components. Include plans, elevations, sections, details, and attachments to other work.

Custom enclosures and cabinets.

1. For handholes and boxes for underground wiring, including the following:

a. Duct entry provisions, including locations and duct sizes.

b. Frame and cover design.

c. Grounding details.

d. Dimensioned locations of cable rack inserts, and pulling-in and lifting irons.

e. Joint details.

D. Coordination Drawings: Conduit routing plans, drawn to scale, on which the following items are shown and coordinated with each other, based on input from installers of the items involved:

1. Structural members in the paths of conduit groups with common supports.

2. HVAC and plumbing items and architectural features in the paths of conduit groups with common supports.

E. Qualification Data: For professional engineer and testing agency.

F. Source quality-control test reports.

1.05 QUALITY ASSURANCE

A. Electrical Components, Devices, and Accessories: Listed and labeled as defined in NFPA 70, Article 100, by a testing agency acceptable to authorities having jurisdiction, and marked for intended use.

B. Comply with NFPA 70, UL 5 surface metal electric raceways and fittings Guide RJPR, UL 870 wire way, auxiliary gutters and associated fittings.

PART 2 - PRODUCTS

2.01 METAL CONDUIT AND TUBING

A. Manufacturers: Subject to compliance with requirements, provide products by one of the following: Acceptable Manufacturers: Triangle, Republic, Carlen, Centex, Western Tube Appleton, Crouse Hinds, Steel City, OOZY. Gender, Race

1. AFC Cable Systems, Inc.

2. Alflex Inc.

3. Allied Tube & Conduit; a Tyco International Ltd. Co.

4. Anamet Electrical, Inc.; Anaconda Metal Hose.

5. Electri-Flex Co.

6. Manhattan/CDT/Cole-Flex.

7. Maverick Tube Corporation.

8. O-Z Gedney; a unit of General Signal.

9. Wheatland Tube Company.

B. Rigid Steel Conduit: ANSI C80.1.

C. Rigid Aluminum Conduit: ANSI C80.5.

D. IMC: ANSI C80.6.

E. PVC-Coated Steel Conduit: PVC-coated rigid steel conduit.

1. Comply with NEMA RN 1.

2. Coating Thickness: 0.040 inch, minimum.

F. EMT: ANSI C80.3.

G. FMC: Full wall, low-carbon steel with electrogalvanized Zinc coating. Reduced wall not acceptable.

H. LFMC: Flexible steel conduit with PVC jacket and UL bonded strip for grounding.

I. Fittings for Conduit (Including all Types and Flexible and Liquidtight), EMT, and Cable: NEMA FB 1; listed for type and size raceway with which used, and for application and environment in which installed.

1. Conduit Fittings for Hazardous (Classified) Locations: Comply with UL 886.

2. Fittings for EMT: compression type.

3. Coating for Fittings for PVC-Coated Conduit: Minimum thickness, 0.040 inch, with overlapping sleeves protecting threaded joints.

4. Manufacturers: Subject to compliance with requirements, provide products by one of the following:

   a. Anamet Electrical, Inc.; Anaconda Metal

   b. Electri-Flex Co.

   c. Triangle PCW, Inc

5. Steel set screw fittings for electrical conduit are allowed only for EMT located in conditioned spaces.

J. All exterior raceways shall be rigid galvanized steel, unless specifically indicated otherwise on Drawings.

K. Joint Compound for Rigid Steel Conduit or IMC: Listed for use in cable connector assemblies, and compounded for use to lubricate and protect threaded raceway joints from corrosion and enhance their conductivity.

2.02 NONMETALLIC CONDUIT AND TUBING

A. Available Manufacturers: Subject to compliance with requirements, manufacturers offering products that may be incorporated into the Work include, but are not limited to, the following:

B. Manufacturers: Subject to compliance with requirements, provide products by one of the following:

1. AFC Cable Systems, Inc.

2. Anamet Electrical, Inc.; Anaconda Metal Hose.

3. Arnco Corporation.

4. CANTEX Inc.

5. CertainTeed Corp.; Pipe & Plastics Group.

6. Condux International, Inc.

7. ElecSYS, Inc.

8. Electri-Flex Co.

9. Lamson & Sessions; Carlon Electrical Products.

10. Manhattan/CDT/Cole-Flex.

11. RACO; a Hubbell Company.

12. Thomas & Betts Corporation.

C. ENT: NEMA TC 13.

D. RNC: NEMA TC 2, Type EPC-40-PVC, unless otherwise indicated on Drawings.

E. LFNC: UL 1660.

F. Fittings for ENT and RNC: NEMA TC 3; match to conduit or tubing type and material.

G. Fittings for LFNC: UL 514B.

H. All underground raceways shall be Schedule 40 PVC, unless otherwise indicated on Drawings.

2.03 OPTICAL FIBER/COMMUNICATIONS CABLE RACEWAY AND FITTINGS

A. Available Manufacturers: Subject to compliance with requirements, manufacturers offering products that may be incorporated into the Work include, but are not limited to, the following:

B. Manufacturers: Subject to compliance with requirements, provide products by one of the following:

1. Arnco Corporation.

2. Endot Industries Inc.

3. IPEX Inc.

4. Lamson & Sessions; Carlon Electrical Products.

C. Description: Comply with UL 2024; flexible type, approved for general-use installation.

2.04 METAL WIREWAYS

A. Available Manufacturers: Subject to compliance with requirements, manufacturers offering products that may be incorporated into the Work include, but are not limited to, the following:

B. Manufacturers: Subject to compliance with requirements, provide products by one of the following:

1. Cooper B-Line, Inc.

2. Hoffman.

3. Square D; Schneider Electric.

4. Tanco.

5. General Electric.

6. Westinghouse/Cutler Hammer.

C. Description: Sheet metal sized and shaped as indicated, NEMA 250, Type 1, 12, 3R, unless otherwise indicated. Provide electrical wire ways of grades and number of channels for each type of service as indicated. Comply with U.L. 870 "Wire way, Auxiliary Gutters and Associated Fittings." And NEC 366.

D. Fittings and Accessories: Include couplings, offsets, elbows, expansion joints, adapters, hold-down straps, end caps, and other fittings to match and mate with wireways as required for complete system.

E. Connectors: Provide wireway connectors suitable for "lay-in" conductors, with connector covers permanently attached that removal is not necessary to utilize the lay-in feature. Connectors shall be grounding bushing, raintight and seal the opening to prevent water getting t inside the boxes, junction, and wireway

F. Wireway Covers: Lay-In Wire ways: Construct lay-in wire ways with hinged covers with components UL-listed, including lengths, connectors, and fittings. Select units to allow fastening hinged cover closed without use of parts other than standard lengths, fittings and connectors. Construct units to be capable of sealing cover in closed position with sealing wire. Provide wire ways with knockouts.

G. Finish: Protect sheet metal parts with rust inhibiting coating and baked enamel finish. Plate finish hardware to prevent corrosion. Protect screws installed toward inside of wireway with spring nuts to prevent wire insulation damage. Use paint ANSI61- grey color.

H. Rain tight Wireway: Construct rain tight lay-in wire ways with hinged covers with components UL-listed, including lengths, connectors and fittings. Design units to allow fastening hinged cover closed without use of parts other than standard lengths, fittings and connectors. Construct units to be capable of sealing cover in closed position with sealing wire. Provide wireway units with knockouts only in bottom of troughs.

1. Construction: 16-gauge galvanized sheet metal parts for 4" x 4" to 6" x 6" sections, and 14-gauge parts for 8" x 8" and larger sections. Provide knockouts only in bottom of troughs, with suitable adapters to facilitate attaching to other NEMA 3R enclosures. Do not use gasketing that can rip or tear during installation or would compromise rain tight capability of the trough area and damage wire insulation.

2. Finish: Provide 14-gauge and 16-gauge galvanized sheet metal parts with corrosion-resistant phosphate primer and baked enamel finish. Plate hardware to prevent corrosion.

2.05 NONMETALLIC WIREWAYS

A. Available Manufacturers: Subject to compliance with requirements, manufacturers offering products that may be incorporated into the Work include, but are not limited to, the following:

B. Manufacturers: Subject to compliance with requirements, provide products by one of the following:

1. Hoffman.

2. Lamson & Sessions; Carlon Electrical Products.

C. Description: Fiberglass polyester, extruded and fabricated to size and shape indicated, with no holes or knockouts. Cover is gasketed with oil-resistant gasket material and fastened with captive screws treated for corrosion resistance. Connections are flanged, with stainless-steel screws and oil-resistant gaskets.

D. Description: PVC plastic, extruded and fabricated to size and shape indicated, with snap-on cover and mechanically coupled connections with plastic fasteners.

E. Fittings and Accessories: Include couplings, offsets, elbows, expansion joints, adapters, hold-down straps, end caps, and other fittings to match and mate with wireways as required for complete system.

2.06 SURFACE RACEWAYS

A. Surface Metal Raceways: Galvanized steel with snap-on covers. Manufacturer's standard enamel finish in color selected by Architect.

1. Available Manufacturers: Subject to compliance with requirements, manufacturers offering products that may be incorporated into the Work include, but are not limited to, the following:

2. Manufacturers: Subject to compliance with requirements, provide products by one of the following:

a. Thomas & Betts Corporation.

b. Walker Systems, Inc.; Wiremold Company (The).

c. Wiremold Company (The); Electrical Sales Division.

3. Multi outlet assemblies shall be used to provide power and/or low potential services as shown on the building plans.

4. The Electrical Contractor shall provide and install all surface metal raceways and appropriate fittings to provide safe and complete installation. The surface metal raceway and fittings shall be the two-piece with receptacles and data outlets (if any) as indicated.

5. When power and data are indicated, the raceway shall afford the capability of being divided into two equal but separate wiring compartments to facilitate installation of power and low potential wiring. "Separate compartments are to be identified by sharply contrasting colors of the interior finish of the divider."

6. A full line of fittings for the surface metal raceway shall be available. This shall include but not limited to elbows (90, internal and external), couplings for joining raceway sections, wire clips for holding conductors or cables in place, blank end fittings for closing open ends of the raceway, transition connectors to other surface metal communications (if any). All openings shall be grommet. Voice/Data connections (if any) shall be provided with interchangeable LAN adapters. When power and data are

indicated, device brackets to install single or two gang devices within the raceway and combination receptacle and telephone outlet covers shall be available.

7. The surface metal raceway and fittings shall meet all requirements of the NEC Article 376 and 380, and shall be listed by Underwriter's Laboratories, Inc. in full compliance with their standard for surface metal raceways and fittings (UL-5).

8. Multi outlet assemblies shall be Wiremold 2000 series with 5-15R simplex receptacles 18" on center.

9. Verify finish color with architect.

B. Surface Nonmetallic Raceways: Two-piece construction, manufactured of rigid PVC with texture and color selected by Architect from manufacturer's standard colors.

1. Available Manufacturers: Subject to compliance with requirements, manufacturers offering products that may be incorporated into the Work include, but are not limited to, the following:

2. Manufacturers: Subject to compliance with requirements, provide products by one of the following:

   a. Butler Manufacturing Company; Walker Division.

   b. Enduro Systems, Inc.; Composite Products Division.

   c. Hubbell Incorporated; Wiring Device-Kellems Division.

   d. Lamson & Sessions; Carlon Electrical Products.

   e. Panduit Corp.

   f. Walker Systems, Inc.; Wiremold Company (The).

   g. Wiremold Company (The); Electrical Sales Division.

3. Multi outlet assemblies shall be used to provide power and/or low potential services as shown on the building plans.

4. The Electrical Contractor shall provide and install all surface metal raceways and appropriate fittings to provide safe and complete installation. The surface metal raceway and fittings shall be the two-piece with receptacles and data outlets (if any) as indicated.

5. When power and data are indicated, the raceway shall afford the capability of being divided into two equal but separate wiring compartments to facilitate installation of power and low potential wiring. "Separate compartments are to be identified by sharply contrasting colors of the interior finish of the divider."

6. A full line of fittings for the surface metal raceway shall be available. This shall include but not limited to elbows (90, internal and external), couplings for joining raceway sections, wire clips for holding conductors or cables in place, blank end fittings for

closing open ends of the raceway, transition connectors to other surface metal communications (if any). All openings shall be grommet. Voice/Data connections (if any) shall be provided with interchangeable LAN adapters. When power and data are indicated, device brackets to install single or two gang devices within the raceway and combination receptacle and telephone outlet covers shall be available.

7. The surface nonmetal raceway and fittings shall meet all requirements of the NEC Article 376 and 380, and shall be listed by Underwriter's Laboratories, Inc. in full compliance with their standard for surface metal raceways and fittings (UL-5).

8. Multi outlet assemblies shall be Wiremold NM2000 series with 5-15R simplex receptacles 18" on center.

9. Verify finish color with architect.

2.07 BOXES, ENCLOSURES, AND CABINETS

A. Manufacturers: Subject to compliance with requirements, provide products by one of the following:

1. Cooper Crouse-Hinds; Div. of Cooper Industries, Inc.
2. EGS/Appleton Electric.
3. Erickson Electrical Equipment Company.
4. Hoffman.
5. Hubbell Incorporated; Killark Electric Manufacturing Co. Division.
6. O-Z/Gedney; a unit of General Signal.
7. RACO; a Hubbell Company.
8. Robroy Industries, Inc.; Enclosure Division.
9. Scott Fetzer Co.; Adalet Division.
10. Spring City Electrical Manufacturing Company.
11. Thomas & Betts Corporation.
12. Walker Systems, Inc.; Wiremold Company (The).
13. Woodhead, Daniel Company; Woodhead Industries, Inc. Subsidiary.

B. Sheet Metal Outlet and Device Boxes: NEMA OS 1.

C. Cast-Metal Outlet and Device Boxes: NEMA FB 1, aluminum, Type FD, with gasketed cover.

D. Nonmetallic Outlet and Device Boxes: NEMA OS 2.

E. Metal Floor Boxes: Cast or sheet metal rectangular.

F. Nonmettalic Floor Boxes: Cast or sheet metal rectangular.

G. Small Sheet Metal Pull and Junction Boxes: NEMA OS 1.

H. Cast-Metal Access, Pull, and Junction Boxes: NEMA FB 1, galvanized, cast iron with gasketed cover.

I. Hinged-Cover Enclosures: NEMA 250, Type 1, with continuous-hinge cover with flush latch, unless otherwise indicated.

1. Metal Enclosures: Steel, finished inside and out with manufacturer's standard enamel.

2. Nonmetallic Enclosures: Plastic.

J. Cabinets:

1. NEMA 250, Type 1, galvanized-steel box with removable interior panel and removable front, finished inside and out with manufacturer's standard enamel.

2. Hinged door in front cover with flush latch and concealed hinge.

3. Key latch to match panelboards.

4. Metal barriers to separate wiring of different systems and voltage.

5. Accessory feet where required for freestanding equipment.

2.08 HANDHOLES AND BOXES FOR EXTERIOR UNDERGROUND WIRING

A. Description: Comply with SCTE 77.

1. Configuration: Units shall be designed for flush burial and have closed bottom, unless otherwise indicated.

2. Color of Fram and Cover: Green.

3. Cover: Weatherproof, secured by tamper-resistant locking devices and having structural load rating consistent with enclosure.

4. Cover Finish: Nonskid finish shall have a minimum coefficient of friction of 0.50.

5. Cover Legend: Molded lettering, "ELECTRIC." as indicated for each service.

6. Conduit Entrance Provisions: Conduit-terminating fittings shall mate with entering ducts for secure, fixed installation in enclosure wall.

7. Handholes 12 inches wide by 24 inches long and larger shall have inserts for cable racks and pulling-in irons installed before concrete is poured.

B. Polymer-Concrete Handholes and Boxes with Polymer-Concrete Cover: Molded of sand and aggregate, bound together with polymer resin, and reinforced with steel or fiberglass or a combination of the two.

1. Available Manufacturers: Subject to compliance with requirements, manufacturers offering products that may be incorporated into the Work include, but are not limited to, the following:

a. Armorcast Products Company.

b. Carson Industries LLC.

c. CDR Systems Corporation.

d. NewBasis.

C. Fiberglass Handholes and Boxes with Polymer-Concrete Frame and Cover: Sheet-molded, fiberglass-reinforced, polyester-resin enclosure joined to polymer-concrete top ring or frame.

1. Available Manufacturers: Subject to compliance with requirements, manufacturers offering products that may be incorporated into the Work include, but are not limited to, the following:

a. Armorcast Products Company.

b. Carson Industries LLC.

c. Christy Concrete Products.

d. Synertech Moulded Products, Inc.; a division of Oldcastle Precast.

2.09 SLEEVES FOR RACEWAYS

A. Steel Pipe Sleeves: ASTM A 53/A 53M, Type E, Grade B, Schedule 40, galvanized steel, plain ends.

B. Cast-Iron Pipe Sleeves: Cast or fabricated "wall pipe," equivalent to ductile-iron pressure pipe, with plain ends and integral water stop, unless otherwise indicated.

C. Sleeves for Rectangular Openings: Galvanized sheet steel with minimum 0.052- or 0.138-inch thickness as indicated and of length to suit application.

D. Coordinate sleeve selection and application with selection and application of firestopping specified in Division 07 Section "Penetration Firestopping."

2.10 SLEEVE SEALS

A. Available Manufacturers: Subject to compliance with requirements, manufacturers offering products that may be incorporated into the Work include, but are not limited to, the following:

1. Advance Products & Systems, Inc.

2. Calpico, Inc.

3. Metraflex Co.

4. Pipeline Seal and Insulator, Inc.

B. Description: Modular sealing device, designed for field assembly, to fill annular space between sleeve and cable.

1. Sealing Elements: EPDM interlocking links shaped to fit surface of cable or conduit. Include type and number required for material and size of raceway or cable.

2. Pressure Plates: Plastic. Include two for each sealing element.

3. Connecting Bolts and Nuts: Carbon steel with corrosion-resistant coating of length required to secure pressure plates to sealing elements. Include one for each sealing element.

2.11 SOURCE QUALITY CONTROL FOR UNDERGROUND ENCLOSURES

A. Handhole and Pull-Box Prototype Test: Test prototypes of handholes and boxes for compliance with SCTE 77. Strength tests shall be for specified tier ratings of products supplied.

1. Tests of materials shall be performed by a independent testing agency.

2. Strength tests of complete boxes and covers shall be by either an independent testing agency or manufacturer. A qualified registered professional engineer shall certify tests by manufacturer.

3. Testing machine pressure gages shall have current calibration certification complying with ISO 9000 and ISO 10012, and traceable to NIST standards.

PART 3 - EXECUTION

3.01 RACEWAY APPLICATION

A. Outdoors: Apply raceway products as specified below, unless otherwise indicated in Drawings:

1. Roof-Top Conduit penetrating through roof: RAL.

2. Aboveground, otherwise: RGS.

3. Underground:

a. Primary conduits to utility pad-mounted transformer: per Utility Standards.

b. RNC, Type EPC-40-PVC, direct buried

4. Connection to Vibrating Equipment (Including Transformers and Hydraulic, Pneumatic, Electric Solenoid, or Motor-Driven Equipment): LFMC limited to ≤ 72”.

5. Boxes and Enclosures, Aboveground: NEMA 250, Type 3R.

6. Application of Handholes and Boxes for Underground Wiring:

   a. Handholes and Pull Boxes in Driveway, Parking Lot, and Off-Roadway Locations, Subject to Occasional, Non-deliberate Loading by Heavy Vehicles: Polymer concrete, SCTE 77, Tier 15 structural load rating.

   b. Handholes and Pull Boxes in Sidewalk and Similar Applications with a Safety Factor for Non-Deliberate Loading by Vehicles: Polymer-concrete units, SCTE 77, Tier 8 structural load rating.

   c. Handholes and Pull Boxes Subject to Light-Duty Pedestrian Traffic Only: Fiberglass-reinforced polyester resin structurally tested according to SCTE 77 with 3000-lbf vertical loading.

B. Comply with the following indoor applications, unless otherwise indicated in Drawings:

1. Exposed, Not Subject to Physical Damage: IMC.

2. Exposed and Subject to Severe Physical Damage: Rigid steel conduit. Includes raceways in the following locations:

   a. Mechanical rooms.

   b. Central Plants

3. Concealed in Ceilings and Interior Walls and Partitions:

   a. Trade size ≤ 1-inch: EMT or IMC.

   b. Trade size > 1-inch: IMC or RGS.

4. Connection to Vibrating Equipment (Including Transformers and Hydraulic, Pneumatic, Electric Solenoid, or Motor-Driven Equipment):

   a. At dry locations ≥ 84” above finished floor to bottom of equipment: FMC

   b. Otherwise: LFMC.

5. Damp or Wet Locations: RGS, RAL, or IMC.

6. Raceways for Communications: EMT or IMC.

7. Boxes and Enclosures: NEMA 250, Type 1, except use NEMA 250, Type 4, galvanized steel in damp or wet locations, unless otherwise noted on Drawings.

C. Minimum Raceway Size:

1. Power and Fire Alarm:

a. Above grade: 3/4-inch trade size.

b. Below grade: 1-inch trade size.

2. Communication:

a. Above grade: 1-inch trade size.

b. Below grade: 1-1/2-inch trade size.

D. Raceway Fittings: Compatible with raceways and suitable for use and location.

1. Rigid and Intermediate Steel Conduit: Use threaded rigid steel conduit fittings, unless otherwise indicated.

2. PVC Externally Coated, Rigid Steel Conduits: Use only fittings listed for use with that material. Patch and seal all joints, nicks, and scrapes in PVC coating after installing conduits and fittings. Use sealant recommended by fitting manufacturer.

E. Do not install aluminum conduits in contact with concrete.

3.02 INSTALLATION

A. Install products in accordance with manufacturer's instructions, NEC 366, NEC 380, and NEC 376. Comply with NECA 1 for installation requirements applicable to products specified in Part 2 except where requirements on Drawings or in this Article are stricter.

B. Use flat-head screws, clips, and straps to fasten raceway base to surfaces. Mount plumb and level.

C. Use suitable insulating bushings and inserts at connections to outlets and corner fittings.

D. Wireway and Auxiliary Gutter Supports: Provide steel channel as specified in Section 260529.

E. Close ends of wireway and unused conduit openings.

F. Ground and bond raceway and wireway under provisions of Section 260526.

G. Keep raceways at least 6 inches away from parallel runs of flues and steam or hot-water pipes. Install horizontal raceway runs above water and steam piping.

H. Complete raceway installation before starting conductor installation.

I. Support raceways as specified in Division 26 Section "Hangers and Supports for Electrical Systems."

J. Arrange stub-ups so curved portions of bends are not visible above the finished slab.

K. Install no more than the equivalent of three 90-degree bends in any conduit run except for communications conduits, for which fewer bends are allowed.

L. Conceal conduit and EMT within finished walls, ceilings, and floors, unless otherwise indicated.

M. Raceways Embedded in Slabs:

1. Run conduit larger than 1-inch trade size, parallel or at right angles to main reinforcement. Where at right angles to reinforcement, place conduit close to slab support.

2. Arrange raceways to cross building expansion joints at right angles with expansion fittings.

3. Change from ENT to RNC, Type EPC-40-PVC, rigid steel conduit, or IMC before rising above the floor.

N. Threaded Conduit Joints, Exposed to Wet, Damp, Corrosive, or Outdoor Conditions: Apply listed compound to threads of raceway and fittings before making up joints. Follow compound manufacturer's written instructions.

O. Raceway Terminations at Locations Subject to Moisture or Vibration: Use insulating bushings to protect conductors, including conductors smaller than No. 4 AWG.

P. Install pull wires in empty raceways. Use polypropylene or monofilament plastic line with not less than 200-lb tensile strength. Leave at least 12 inches of slack at each end of pull wire.

Q. Raceways for Optical Fiber and Communications Cable: Install raceways, metallic and nonmetallic, rigid and flexible, as follows:

1. 3/4-Inch Trade Size and Smaller: Install raceways in maximum lengths of 50 feet.

2. 1-Inch Trade Size and Larger: Install raceways in maximum lengths of 75 feet.

3. Install with a maximum of two 90-degree bends or equivalent for each length of raceway unless Drawings show stricter requirements. Separate lengths with pull or junction boxes or terminations at distribution frames or cabinets where necessary to comply with these requirements.

R. Install raceway sealing fittings at suitable, approved, and accessible locations and fill them with listed sealing compound. For concealed raceways, install each fitting in a flush steel box with a blank cover plate having a finish similar to that of adjacent plates or surfaces. Install raceway sealing fittings at the following points:

1. Where conduits pass from warm to cold locations, such as boundaries of refrigerated spaces.

2. Where otherwise required by NFPA 70.

S. Expansion-Joint Fittings for RNC: Install in each run of aboveground conduit that is located where environmental temperature change may exceed 30 deg F, and that has straight-run length that exceeds 25 feet.

1. Install expansion-joint fittings for each of the following locations, and provide type and quantity of fittings that accommodate temperature change listed for location:

a. Outdoor Locations Not Exposed to Direct Sunlight: 125 deg F temperature change.

b. Outdoor Locations Exposed to Direct Sunlight: 155 deg F temperature change.

c. Indoor Spaces: Connected with the Outdoors without Physical Separation: 125 deg F temperature change.

d. Attics: 135 deg F temperature change.

2. Install fitting(s) that provide expansion and contraction for at least 0.00041 inch per foot of length of straight run per deg F of temperature change.

3. Install each expansion-joint fitting with position, mounting, and piston setting selected according to manufacturer's written instructions for conditions at specific location at the time of installation.

T. Flexible Conduit Connections: Use maximum of 72 inches of flexible conduit for recessed and semi-recessed lighting fixtures of 3/4 inch size minimum, equipment subject to vibration, noise transmission, or movement; and for transformers and motors are limited to no more than 4 feet in length.

1. Use LFMC in damp or wet locations subject to severe physical damage.

2. Use LFMC or LFNC in damp or wet locations not subject to severe physical damage.

U. Recessed Boxes in Masonry Walls: Saw-cut opening for box in center of cell of masonry block and install box flush with surface of wall.

V. Set metal floor boxes level and flush with finished floor surface.

W. Set nonmetallic floor boxes level. Trim after installation to fit flush with finished floor surface.

X. Label and marked all junction boxes, pull boxes, cabinets and conduits leaving and entering any of the boxes, cabinets, and panelboards.

Y. Boxes, junction, pull, cabinets, panelboards and other cabinets shall be rigidly supported with cross bars, Unistrut, all-thread, and any approved that will prevent from moving.

3.03 INSTALLATION OF UNDERGROUND CONDUIT

A. Direct-Buried Conduit:

1. Excavate trench bottom to provide firm and uniform support for conduit. Prepare trench bottom as specified in Division 31 Section "Earth Moving" for pipe less than 6 inches in nominal diameter.

2. For Service entrance conduit shall be buried not less 48 inches depth from the top of the conduit to finish grade. For feeder conduit shall be buried not less 36 inches depth from the top of the conduit to finish grade. For branch conduit shall be buried not less 24 inches depth from the top of the conduit to finish grade unless subject to vehicle traffic. The conduits are to be level to the ground.

3. Install backfill as specified in Division 31 Section "Earth Moving."

4. After installing conduit, the conduit shall be supported anchor to the ground with a 3/4inch EMT crossways on every 4 feet intervals then backfill and compact with sand fill. Start at tie-in point, and work toward end of conduit run, leaving conduit at end of run free to move with expansion and contraction as temperature changes during this process. Firmly hand tamp backfill around conduit to provide maximum supporting strength. After placing controlled backfill to within 12 inches of finished grade, make final conduit connection at end of run and complete backfilling with 95% compaction.

5. Install manufactured sweep 90-degree RMC duct elbows for stub-ups at poles and equipment and at building entrances through the floor, unless otherwise indicated. Encase elbows for stub-up ducts throughout the length of the elbow.

6. Install manufactured rigid steel conduit elbows for stub-ups at poles and equipment and at building entrances through the floor.

   a. Couple steel conduits to ducts with adapters designed for this purpose and encase coupling with 3 inches of concrete.

   b. For stub-ups at equipment mounted on outdoor concrete bases, extend steel conduit horizontally a minimum of 60 inches from edge of equipment pad or foundation. Install insulated grounding bushings on terminations at equipment.

   c. Wrap elbow and first 12” of vertical conduit with Scotch #51 tape (no substitutions), 20-mil thick, 4” wide tape applied two full laps at each start and end of wrap, and 1” overlap for intermediate laps.

   d. Use special-radius elbow, minimum 24” radius unless otherwise indicated on Drawings.

7. Warning Planks: Bury warning planks approximately 12 inches above direct-buried conduits, placing those 24 inches o.c. align planks along the width and along the centerline of conduit.

3.04 INSTALLATION OF UNDERGROUND HANDHOLES AND BOXES

A. Install handholes and boxes level and plumb and with orientation and depth coordinated with connecting conduits to minimize bends and deflections required for proper entrances.

B. Unless otherwise indicated, support units on a level bed of crushed stone or gravel, graded from 1/2-inch sieve to No. 4 sieve and compacted to same density as adjacent undisturbed earth.

C. Elevation: In paved areas, set so cover surface will be flush with finished grade. Set covers of other enclosures 1 inch above finished grade.

D. Install removable hardware, including pulling eyes, cable stanchions, cable arms, and insulators, as required for installation and support of cables and conductors and as indicated. Select arm lengths to be long enough to provide spare space for future cables, but short enough to preserve adequate working clearances in the enclosure.

E. Field-cut openings for conduits according to enclosure manufacturer's written instructions. Cut wall of enclosure with a tool designed for material to be cut. Size holes for terminating fittings to be used, and seal around penetrations after fittings are installed.

3.05 SLEEVE INSTALLATION FOR ELECTRICAL PENETRATIONS

A. Coordinate sleeve selection and application with selection and application of firestopping specified in Division 07 Section "Penetration Firestopping."

B. Concrete Slabs and Walls: Install sleeves for penetrations unless core-drilled holes or formed openings are used. Install sleeves during erection of slabs and walls.

C. Use pipe sleeves unless penetration arrangement requires rectangular sleeved opening.

D. Rectangular Sleeve Minimum Metal Thickness:

1. For sleeve cross-section rectangle perimeter less than 50 inches and no side greater than 16 inches, thickness shall be 0.052 inch.

2. For sleeve cross-section rectangle perimeter equal to, or greater than, 50 inches and 1 or more sides equal to, or greater than, 16 inches, thickness shall be 0.138 inch.

E. Fire-Rated Assemblies: Install sleeves for penetrations of fire-rated floor and wall assemblies unless openings compatible with firestop system used are fabricated during construction of floor or wall.

F. Cut sleeves to length for mounting flush with both surfaces of walls.

G. Extend sleeves installed in floors 2 inches above finished floor level.

H. Size pipe sleeves to provide 1/4-inch annular clear space between sleeve and raceway unless sleeve seal is to be installed.

I. Seal space outside of sleeves with grout for penetrations of concrete and masonry and with approved joint compound for gypsum board assemblies.

J. Interior Penetrations of Non-Fire-Rated Walls and Floors: Seal annular space between sleeve and raceway, using joint sealant appropriate for size, depth, and location of joint. Refer to Division 07 Section "Joint Sealants" for materials and installation.

K. Fire-Rated-Assembly Penetrations: Maintain indicated fire rating of walls, partitions, ceilings, and floors at raceway penetrations. Install sleeves and seal with firestop materials. Comply with Division 07 Section "Penetration Firestopping."

L. Roof-Penetration Sleeves: Seal penetration of individual raceways with flexible, boot-type flashing units applied in coordination with roofing work.

M. Aboveground, Exterior-Wall Penetrations: Seal penetrations using sleeves and mechanical sleeve seals. Select sleeve size to allow for 1-inch annular clear space between pipe and sleeve for installing mechanical sleeve seals.

N. Underground, Exterior-Wall Penetrations: Install cast-iron "wall pipes" for sleeves. Size sleeves to allow for 1-inch annular clear space between raceway and sleeve for installing mechanical sleeve seals.

3.06 SLEEVE-SEAL INSTALLATION

A. Install to seal underground, exterior wall penetrations.

B. Use type and number of sealing elements recommended by manufacturer for raceway material and size. Position raceway in center of sleeve. Assemble mechanical sleeve seals and install in annular space between raceway and sleeve. Tighten bolts against pressure plates that cause sealing elements to expand and make watertight seal.

3.07 FIRESTOPPING

A. Apply firestopping to electrical penetrations of fire-rated floor and wall assemblies to restore original fire-resistance rating of assembly. Firestopping materials and installation requirements are specified in Division 07 Section "Penetration Firestopping."

3.08 PROTECTION

A. Provide final protection and maintain conditions that ensure coatings, finishes, and cabinets are without damage or deterioration at time of Substantial Completion.

1. Repair damage to galvanized finishes with zinc-rich paint recommended by manufacturer.

2. Repair damage to PVC or paint finishes with matching touchup coating recommended by manufacturer.

END OF SECTION 26 05 33

26 05 43

UNDERGROUND DUCTS AND RACEWAYS FOR ELECTRICAL SYSTEMS

PART 1 - GENERAL

1.01 RELATED DOCUMENTS

A. Drawings and general provisions of the Contract, including General and Supplementary Conditions and Division 01 Specification Sections, apply to this Section.

1.02 SUMMARY

A. This Section includes the following:

1. Conduit, ducts, and duct accessories for concrete-encased duct banks.

2. Hand-holes and boxes.

3. Manholes.

1.03 DEFINITION

A. RNC: Rigid nonmetallic conduit.

1.04 SUBMITTALS

A. Product Data: For the following:

1. Duct-bank materials, including separators and miscellaneous components.

2. Ducts and conduits and their accessories, including elbows, end bells, bends, fittings, and solvent cement.

3. Accessories for manholes, hand-holes, boxes.

4. Warning tape.

5. Warning planks.

B. Shop Drawings for Precast or Factory-Fabricated Underground Utility Structures: Include plans, elevations, sections, details, attachments to other work, and accessories, including the following:

1. Duct entry provisions, including locations and duct sizes.

2. Reinforcement details.

3. Frame and cover design and manhole frame support rings.

4. Ladder details.

5. Grounding details.

6. Dimensioned locations of cable rack inserts, pulling-in and lifting irons, and sumps.

7. Joint details.

C. Shop Drawings for Factory-Fabricated Handholes and Boxes Other Than Precast Concrete: Include dimensioned plans, sections, and elevations, and fabrication and installation details, including the following:

1. Duct entry provisions, including locations and duct sizes.

2. Cover design.

3. Grounding details.

4. Dimensioned locations of cable rack inserts, and pulling-in and lifting irons.

D. Duct-Bank Coordination Drawings: Show duct profiles and coordination with other utilities and underground structures.

1. Include plans and sections, drawn to scale, and show bends and locations of expansion fittings.

2. Drawings shall be signed and sealed by a qualified professional engineer.

E. Product Certificates: For concrete and steel used in pre-cast concrete manholes and handholes, as required by ASTM C 858.

F. Qualification Data: For professional engineer and testing agency.

G. Source quality-control test reports.

H. Field quality-control test reports.

1.05 QUALITY ASSURANCE

A. Testing Agency Qualifications: Qualified according to ASTM E 329 for testing indicated.

B. Comply with ANSI C2.

C. Comply with NFPA 70.

1.06 DELIVERY, STORAGE, AND HANDLING

A. Deliver ducts to Project site with ends capped. Store nonmetallic ducts with supports to prevent bending, warping, and deforming.

B. Store pre-cast concrete and other factory-fabricated underground utility structures at Project site as recommended by manufacturer to prevent physical damage. Arrange so identification markings are visible.

C. Lift and support pre-cast concrete units only at designated lifting or supporting points.

1.07 PROJECT CONDITIONS

A. Interruption of Existing Electrical Service: Do not interrupt electrical service to facilities occupied by Owner or others unless permitted under the following conditions and then only after arranging to provide temporary electrical service according to requirements indicated:

1. Notify Construction Manager and Owner no fewer than two (2) weeks in advance of proposed interruption of electrical service.

2. Do not proceed with interruption of electrical service without Owner's written permission.

1.08 COORDINATION

A. Coordinate layout and installation of ducts, manholes, hand-holes, and boxes with final arrangement of other utilities, site grading, and surface features as determined in the field.

B. Coordinate elevations of ducts and duct-bank entrances into manholes, hand-holes, and boxes with final locations and profiles of ducts and duct banks as determined by coordination with other utilities, underground obstructions, and surface features. Revise locations and elevations from those indicated as required to suit field conditions and to ensure that duct runs drain to manholes and hand-holes, and as approved by Architect.

1.09 EXTRA MATERIALS

A. Furnish extra materials described below that match products installed and that are packaged with protective covering for storage and identified with labels describing contents.

B. Furnish cable-support stanchions, arms, and insulators, and associated fasteners in quantities equal to 10 percent of quantity of each item installed.

PART 2 - PRODUCTS

2.01 CONDUIT

A. Refer to Section 26 05 33.

B. Rigid Steel Conduit: Galvanized. Comply with ANSI C80.1.

C. RNC: NEMA TC 2, Type EPC-40-PVC and Type EPC-80-PVC, UL 651, with matching fittings by same manufacturer as the conduit, complying with NEMA TC 3 and UL 514B.

2.02 NONMETALLIC DUCTS AND DUCT ACCESSORIES

A. Manufacturers: Subject to compliance with requirements, manufacturers offering products that may be incorporated into the Work include, but are not limited to, the following:

1. ARNCO Corp.

2. Beck Manufacturing.

3. Cantex, Inc.

4. CertainTeed Corp.; Pipe & Plastics Group.

5. Condux International, Inc.

6. ElecSys, Inc.

7. Electri-Flex Company.

8. IPEX Inc.

9. Lamson & Sessions; Carlon Electrical Products.

10. Manhattan/CDT; a division of Cable Design Technologies.

11. Spiraduct/AFC Cable Systems, Inc.

B. Duct Accessories:

1. Duct Separators: Factory-fabricated rigid PVC interlocking spacers, sized for type and sizes of ducts with which used for supporting ducts during concreting or backfilling.

a. Carlon “Snap-N-Stac” combination spacers, interlocking type with 3” separation and reducers as required.

2. Warning Tape: Underground-line warning tape specified in Division 26 Section "Identification for Electrical Systems."

3. Concrete Warning Planks: Nominal 12 by 24 by 3 inches in size, manufactured from 6000-psi concrete.

a. Color: Red dye added to concrete during batching.

b. Mark each plank with "ELECTRIC" in 2-inch- high, 3/8-inch- deep letters.

C. Concrete Encasement:

1. Encased in minimum 3” of 5000 PSI conc

2.03 PRECAST CONCRETE HANDHOLES AND BOXES

A. Manufacturers: Subject to compliance with requirements, manufacturers offering products that may be incorporated into the Work include, but are not limited to, the following:

1. Carder Concrete Products.

2. Christy Concrete Products.

3. Elmhurst-Chicago Stone Co.

4. Oldcastle Precast Group.

5. Riverton Concrete Products; a division of Cretex Companies, Inc.

6. Utility Concrete Products, LLC.

7. Utility Vault Co.

8. Wausau Tile, Inc.

B. Comply with ASTM C 858 for design and manufacturing processes.

C. Structural Rating: AASHTO HB 17, H-20.

D. Description: Factory-fabricated, reinforced-concrete, monolithically poured walls and bottom unless open-bottom enclosures are indicated. Frame and cover shall form top of enclosure and shall have load rating consistent with that of hand-hole or box.

1. Frame and Cover: Weatherproof cast-iron frame, with cast-iron cover with recessed cover hook eyes and tamper-resistant, captive, cover-securing bolts.

2. Frame and Cover: Weatherproof steel frame, with steel cover with recessed cover hook eyes and tamper-resistant, captive, cover-securing bolts.

3. Frame and Cover: Weatherproof steel frame, with hinged steel access door assembly with tamper-resistant, captive, cover-securing bolts.

    a. Cover Hinges: Concealed, with hold-open ratchet assembly.

    b. Cover Handle: Recessed.

4. Frame and Cover: Weatherproof aluminum frame with hinged aluminum access door assembly with tamper-resistant, captive, cover-securing bolts.

    a. Cover Hinges: Concealed, with hold-open ratchet assembly.

    b. Cover Handle: Recessed.

5. Cover Finish: Nonskid finish shall have a minimum coefficient of friction of 0.50.

6. Cover Legend: Molded lettering.

7. Configuration: Units shall be designed for flush burial and have closed bottom, unless otherwise indicated.

8. Extensions and Slabs: Designed to mate with bottom of enclosure. Same material as enclosure.

    a. Extension shall provide increased depth of 12 inches.

b. Slab: Same dimensions as bottom of enclosure and arranged to provide closure.

9. Windows: Precast openings in walls, arranged to match dimensions and elevations of approaching ducts and duct banks plus an additional 12 inches vertically and horizontally to accommodate alignment variations.

    a. Windows shall be located no less than 6 inches from interior surfaces of walls, floors, or frames and covers of handholes, but close enough to corners to facilitate racking of cables on walls.

    b. Window opening shall have cast-in-place, welded wire fabric reinforcement for field cutting and bending to tie in to concrete envelopes of duct banks.

    c. Window openings shall be framed with at least two additional No. 4 steel reinforcing bars in concrete around each opening.

10. Duct Entrances in Handhole Walls: Cast end-bell or duct-terminating fitting in wall for each entering duct.

    a. Type and size shall match fittings to duct or conduit to be terminated.

    b. Fittings shall align with elevations of approaching ducts and be located near interior corners of handholes to facilitate racking of cable.

11. Handholes 12 inches wide by 24 inches long and larger shall have inserts for cable racks and pulling-in irons installed before concrete is poured.

2.04 HANDHOLES AND BOXES OTHER THAN PRECAST CONCRETE

A. Description: Comply with SCTE 77.

1. Color: Gray.

2. Configuration: Units shall be designed for flush burial and have closed bottom, unless otherwise indicated.

3. Cover: Weatherproof, secured by tamper-resistant locking devices and having structural load rating consistent with enclosure.

4. Cover Finish: Nonskid finish shall have a minimum coefficient of friction of 0.50.

5. Cover Legend: Molded lettering, as indicated for each service.

6. Direct-Buried Wiring Entrance Provisions: Knockouts equipped with insulated bushings or end-bell fittings, selected to suit box material, sized for wiring indicated, and arranged for secure, fixed installation in enclosure wall.

7. Duct Entrance Provisions: Duct-terminating fittings shall mate with entering ducts for secure, fixed installation in enclosure wall.

8. Handholes 12 inches wide by 24 inches long and larger shall have factory-installed inserts for cable racks and pulling-in irons.

B. Polymer Concrete Handholes and Boxes with Polymer Concrete Cover: Molded of sand and aggregate, bound together with a polymer resin, and reinforced with steel or fiberglass or a combination of the two.

1. Available Manufacturers: Subject to compliance with requirements, manufacturers offering products that may be incorporated into the Work include, but are not limited to, the following:

2. Manufacturers: Subject to compliance with requirements, provide products by one of the following:

3. Basis-of-Design Product: Subject to compliance with requirements, provide the product indicated on Drawings or a comparable product by one of the following:

a. Armorcast Products Company.

b. Carson Industries LLC.

c. CDR Systems Corporation.

d. NewBasis.

C. Fiberglass Handholes and Boxes with Polymer Concrete Frame and Cover: Sheet-molded, fiberglass-reinforced, polyester resin enclosure joined to polymer concrete top ring or frame.

1. Available Manufacturers: Subject to compliance with requirements, manufacturers offering products that may be incorporated into the Work include, but are not limited to, the following:

2. Manufacturers: Subject to compliance with requirements, provide products by one of the following:

3. Basis-of-Design Product: Subject to compliance with requirements, provide the product indicated on Drawings or a comparable product by one of the following:

a. Armorcast Products Company.

b. Carson Industries LLC.

c. Christy Concrete Products.

d. Synertech Moulded Products, Inc.; a division of Oldcastle Precast.

D. Fiberglass Handholes and Boxes: Molded of fiberglass-reinforced polyester resin, with covers of polymer concrete.

1. Available Manufacturers: Subject to compliance with requirements, manufacturers offering products that may be incorporated into the Work include, but are not limited to, the following:

2. Manufacturers: Subject to compliance with requirements, provide products by one of the following:

3. Basis-of-Design Product: Subject to compliance with requirements, provide the product indicated on Drawings or a comparable product by one of the following:

    a. Carson Industries LLC.

    b. Christy Concrete Products.

    c. Nordic Fiberglass, Inc.

2.05 PRECAST MANHOLES

A. Manufacturers: Subject to compliance with requirements, manufacturers offering products that may be incorporated into the Work include, but are not limited to, the following:

1. Carder Concrete Products.

2. Christy Concrete Products.

3. Elmhurst-Chicago Stone Co.

4. Oldcastle Precast Group.

5. Riverton Concrete Products; a division of Cretex Companies, Inc.

6. Utility Concrete Products, LLC.

7. Utility Vault Co.

8. Wausau Tile, Inc.

B. Structural Rating: AASHTO HB 17, H-20.

C. Comply with ASTM C 858 and with interlocking mating sections, complete with accessories, hardware, and features.

1. Windows: Precast openings in walls, arranged to match dimensions and elevations of approaching ducts and duct banks plus an additional 12 inches vertically and horizontally to accommodate alignment variations.

    a. Windows shall be located no less than 6 inches from interior surfaces of walls, floors, or roofs of manholes, but close enough to corners to facilitate racking of cables on walls.

b. Window opening shall have cast-in-place, welded wire fabric reinforcement for field cutting and bending to tie in to concrete envelopes of duct banks.

c. Window openings shall be framed with at least two additional No. 4 steel reinforcing bars in concrete around each opening.

2. Duct Entrances in Manhole Walls: Cast end-bell or duct-terminating fitting in wall for each entering duct.

a. Type and size shall match fittings to duct or conduit to be terminated.

b. Fittings shall align with elevations of approaching ducts and be located near interior corners of manholes to facilitate racking of cable.

D. Concrete Knockout Panels: 1-1/2 to 2 inches thick, for future conduit entrance and sleeve for ground rod.

E. Joint Sealant: Asphaltic-butyl material with adhesion, cohesion, flexibility, and durability properties necessary to withstand maximum hydrostatic pressures at the installation location with the ground-water level at grade.

2.06 CAST-IN-PLACE MANHOLES

A. Description: Underground utility structures, constructed in place, complete with accessories, hardware, and features. Include concrete knockout panels for conduit entrance and sleeve for ground rod.

B. Materials: Comply with ASTM C 858 and with Division 03 Section "Cast-in-Place Concrete."

C. Structural Design Loading: As specified in Part 3 "Underground Enclosure Application" Article.

2.07 UTILITY STRUCTURE ACCESSORIES

A. Available Manufacturers: Subject to compliance with requirements, manufacturers offering products that may be incorporated into the Work include, but are not limited to, the following:

B. Manufacturers: Subject to compliance with requirements, provide products by one of the following:

1. Bilco Company (The).

2. Campbell Foundry Company.

3. Carder Concrete Products.

4. Christy Concrete Products.

5. East Jordan Iron Works, Inc.

6. Elmhurst-Chicago Stone Co.

7. McKinley Iron Works, Inc.

8. Neenah Foundry Company.

9. NewBasis.

10. Oldcastle Precast Group.

11. Osburn Associates, Inc.

12. Pennsylvania Insert Corporation.

13. Riverton Concrete Products; a division of Cretex Companies, Inc..

14. Strongwell Corporation; Lenoir City Division.

15. Underground Devices, Inc.

16. Utility Concrete Products, LLC.

17. Utility Vault Co.

18. Wausau Tile, Inc.

C. Manhole Frames, Covers, and Chimney Components: Comply with structural design loading specified for manhole.

1. Frame and Cover: Weatherproof, gray cast iron complying with ASTM A 48/A 48M, Class 30B with milled cover-to-frame bearing surfaces; diameter, 29 inches.

a. Cover Finish: Nonskid finish shall have a minimum coefficient of friction of 0.50.

b. Special Covers: Recess in face of cover designed to accept finish material in paved areas.

2. Cover Legend: Cast in. Selected to suit system.

a. Legend: "ELECTRIC-LV" for duct systems with power wires and cables for systems operating at 600 V and less.

b. Legend: "ELECTRIC-HV" for duct systems with medium-voltage cables.

c. Legend: "COMMUNICATION" for communications, data, and telephone duct systems.

3. Manhole Chimney Components: Precast concrete rings with dimensions matched to those of roof opening.

a. Mortar for Chimney Ring and Frame and Cover Joints: Comply with ASTM C 270, Type M, except for quantities less than 2.0 cu. ft. where packaged mix complying with ASTM C 387, Type M, may be used.

D. Manhole Sump Frame and Grate: ASTM A 48/A 48M, Class 30B, gray cast iron.

E. Pulling Eyes in Concrete Walls: Eyebolt with reinforcing-bar fastening insert, 2-inch diameter eye, and 1-by 4-inch bolt.

1. Working Load Embedded in 6-Inch, 4000-psi Concrete: 13,000-lbf minimum tension.

F. Pulling Eyes in Non-concrete Walls: Eyebolt with reinforced fastening, 1-1/4-inch diameter eye, rated 2500-lbf minimum tension.

G. Pulling-In and Lifting Irons in Concrete Floors: 7/8-inch diameter, hot-dip galvanized, bent steel rod; stress relieved after forming; and fastened to reinforcing rod. Exposed triangular opening.

1. Ultimate Yield Strength: 40,000-lbf shear and 60,000-lbf tension.

H. Bolting Inserts for Concrete Utility Structure Cable Racks and Other Attachments: Flared, threaded inserts of noncorrosive, chemical-resistant, nonconductive thermoplastic material; 1/2-inch ID by 2-3/4 inches deep, flared to 1-1/4 inches minimum at base.

1. Tested Ultimate Pullout Strength: 12,000 lbf minimum.

I. Expansion Anchors for Installation after Concrete Is Cast: Zinc-plated, carbon-steel-wedge type with stainless-steel expander clip with 1/2-inch bolt, 5300-lbf rated pullout strength, and minimum 6800-lbf rated shear strength.

J. Cable Rack Assembly: Steel, hot-dip galvanized, except insulators.

1. Stanchions: T-section or channel; 2-1/4-inch nominal size; punched with 14 holes on 1-1/2-inch centers for cable-arm attachment.

2. Arms: 1-1/2 inches wide, lengths ranging from 3 inches with 450-lb minimum capacity to 18 inches with 250-lb minimum capacity. Arms shall have slots along full length for cable ties and be arranged for secure mounting in horizontal position at any vertical location on stanchions.

3. Insulators: High-glaze, wet-process porcelain arranged for mounting on cable arms.

K. Cable Rack Assembly: Nonmetallic. Components fabricated from nonconductive, fiberglass-reinforced polymer.

1. Stanchions: Nominal 36 inches high by 4 inches wide, with minimum of 9 holes for arm attachment.

2. Arms: Arranged for secure, drop-in attachment in horizontal position at any location on cable stanchions, and capable of being locked in position. Arms shall be available in lengths ranging from 3 inches with 450-lb minimum capacity to 20 inches with 250-lb minimum capacity. Top of arm shall be nominally 4 inches wide, and arm shall have slots along full length for cable ties.

L. Duct-Sealing Compound: Non-hardening, safe for contact with human skin, not deleterious to cable insulation, and workable at temperatures as low as 35 deg F. Capable of withstanding temperature of 300 deg F without slump and adhering to clean surfaces of plastic ducts, metallic conduits, conduit coatings, concrete, masonry, lead, cable sheaths, cable jackets, insulation materials, and common metals.

M. Fixed Manholes Ladders: Arranged for attachment to wall of manhole. Ladder and mounting brackets and braces shall be fabricated from hot-dip galvanized steel.

N. Cover Hooks: Heavy duty, designed for lifts 60 lbf and greater. Two required.

2.08 SOURCE QUALITY CONTROL

A. Test and inspect precast concrete utility structures according to ASTM C 1037.

B. Non-concrete Handhole and Pull-Box Prototype Test: Test prototypes of manholes and boxes for compliance with SCTE 77. Strength tests shall be for specified tier ratings of products supplied.

1. Tests of materials shall be performed by a independent testing agency.

2. Strength tests of complete boxes and covers shall be by either an independent testing agency or the manufacturer. A qualified registered professional engineer shall certify tests by manufacturer.

3. Testing machine pressure gages shall have current calibration certification complying with ISO 9000 and ISO 10012, and traceable to NIST standards.

PART 3 - EXECUTION

3.01 UNDERGROUND DUCT APPLICATION

A. Ducts for Electrical Cables Over 600 V: RNC, NEMA Type EPC-80-PVC, in concrete-encased duct bank, unless otherwise indicated. This includes Electric Utility Primary Duct Banks.

B. Ducts for Electrical Feeders 600 V and Less: RNC, NEMA Type EPC-80 -PVC, in concrete-encased duct bank, unless otherwise indicated.

C. Underground Ducts for Telephone, Communications, or Data Utility Service Cables: RNC, NEMA Type EPC-80-PVC, installed in concrete-encased duct bank, unless otherwise indicated.

D. Wrap all RGS with 2 layers of Scotch wrap which will come in contact with concrete.

3.02 UNDERGROUND ENCLOSURE APPLICATION

A. Handholes and Boxes for 600 V and Less:

1. Units in Roadways and Other Deliberate Traffic Paths: Precast concrete.
AASHTO HB 17, H-20 structural load rating.

2. Units in Driveway, Parking Lot, and Off-Roadway Locations, Subject to Occasional, Non-deliberate Loading by Heavy Vehicles: Precast concrete, AASHTO HB 17, H-20 structural load rating.

3. Units in Sidewalk and Similar Applications with a Safety Factor for Non-deliberate Loading by Vehicles: Precast concrete, AASHTO HB 17, H-10 structural load rating.

4. Units Subject to Light-Duty Pedestrian Traffic only: Fiberglass-reinforced polyester resin structurally tested according to SCTE 77 with 3000-lbf vertical loading.

B. Manholes: Precast or cast-in-place concrete.

1. Units Located in Roadways and Other Deliberate Traffic Paths by Heavy or Medium Vehicles: H-20 structural load rating according to AASHTO HB 17.

2. Units Not Located in Deliberate Traffic Paths by Heavy or Medium Vehicles: H-10 load rating according to AASHTO HB 17.

3.03 EARTHWORK

A. Excavation and Backfill: Comply with Division 31 Section "Earth Moving," but do not use heavy-duty, hydraulic-operated, compaction equipment.

B. Restore surface features at areas disturbed by excavation and reestablish original grades, unless otherwise indicated. Replace removed sod immediately after backfilling is completed.

C. Restore areas disturbed by trenching, storing of dirt, cable laying, and other work. Restore vegetation and include necessary top soiling, fertilizing, liming, seeding, sodding, sprigging, and mulching. Comply with Division 32 Sections "Turf and Grasses" and "Plants."

D. Cut and patch existing pavement in the path of underground ducts and utility structures according to Division 01 Section "Cutting and Patching."

3.04 DUCT INSTALLATION

A. Slope: Pitch ducts a minimum slope of 1:300 down toward manholes and handholes and away from buildings and equipment. Slope ducts from a high point in runs between two manholes to drain in both directions.

B. Curves and Bends: Use 5-degree angle couplings for small changes in direction. Use manufactured long sweep bends with a minimum radius of 48 inches, both horizontally and vertically, at other locations, unless otherwise indicated and 25ft horizontally for above 600v cables.

C. Joints: Use solvent-cemented joints in ducts and fittings and make watertight according to manufacturer's written instructions. Stagger couplings so those of adjacent ducts do not lie in same plane.

D. Duct Entrances to Manholes and Concrete and Polymer Concrete Handholes: Use end bells, spaced approximately 10 inches o.c. for 5-inch ducts, and vary proportionately for other duct sizes.

1. Begin change from regular spacing to end-bell spacing 10 feet from the end bell without reducing duct line slope and without forming a trap in the line.

2. Direct-Buried Duct Banks: Install an expansion and deflection fitting in each conduit in the area of disturbed earth adjacent to manhole or handhole.

3. Grout end bells into structure walls from both sides to provide watertight entrances.

E. Building Wall Penetrations: Make a transition from underground duct to rigid steel conduit and RMC sweep 90 degree elbow at least 10 feet outside the building wall without reducing duct line slope away from the building, and without forming a trap in the line. Use fittings manufactured for duct-to-conduit transition. Install conduit penetrations of building walls as specified in Division 26 Section "Common Work Results for Electrical."

F. Sealing: Provide temporary closure at terminations of ducts that have cables pulled. Seal spare ducts at terminations. Use sealing compound and plugs to withstand at least 15-psig hydrostatic pressure.

G. Pulling Cord: Install 100-lbf- test nylon cord in ducts, including spares.

H. Concrete-Encased Ducts: Support ducts on duct separators.

1. Separator Installation: Space separators close enough to prevent sagging and deforming of ducts, with not more than 6 feet apart. Secure separators to earth and to ducts to prevent floating during concreting. Stagger separators approximately 6 inches between tiers. Tie entire assembly together using fabric straps; do not use tie wires or reinforcing steel that may form conductive or magnetic loops around ducts or duct groups.

2. Concreting Sequence: Pour each run of envelope between manholes or other terminations in one continuous operation.

    a. Start at one end and finish at the other, allowing for expansion and contraction of ducts as their temperature changes during and after the pour. Use expansion fittings installed according to manufacturer's written recommendations or use other specific measures to prevent expansion-contraction damage.

    b. If more than one pour is necessary, terminate each pour in a vertical plane and install 3/4-inch reinforcing rod dowels extending 18 inches into concrete on both sides of joint near corners of envelope.

3. Pouring Concrete: Spade concrete carefully during pours to prevent voids under and between conduits and at exterior surface of envelope. Do not allow a heavy mass of concrete to fall directly onto ducts. Use a plank to direct concrete down sides of bank assembly to trench bottom. Allow concrete to flow to center of bank and rise up in middle, uniformly filling all open spaces. Do not use power-driven agitating equipment unless specifically designed for duct-bank application.

4. Reinforcement: Reinforce concrete-encased duct banks where they cross disturbed earth and where indicated. Arrange reinforcing rods and ties without forming conductive or magnetic loops around ducts or duct groups.

5. Forms: Use walls of trench to form side walls of duct bank where soil is self-supporting and concrete envelope can be poured without soil inclusions; otherwise, use forms.

6. Minimum Space between Ducts: 3 inches between ducts and exterior envelope wall, 2 inches between ducts for like services, and 4 inches (between power and signal ducts.

7. Depth: Install top of duct bank at least 36 inches below finished grade in areas not subject to deliberate traffic, and at least 48 inches below finished grade in deliberate traffic paths for vehicles, unless otherwise indicated.

8. Stub-Ups: Use manufactured duct elbows for stub-ups at poles and equipment and at building entrances through the floor, unless otherwise indicated. Extend concrete encasement throughout the length of the elbow.

9. Stub-Ups: Use manufactured rigid steel conduit elbows for stub-ups at poles and equipment and at building entrances through the floor.

    a. Couple steel conduits to ducts with adapters designed for this purpose and encase coupling with 3 inches of concrete.

    b. Stub-Ups to Equipment: For equipment mounted on outdoor concrete bases, extend steel conduit horizontally a minimum of 60 inches from edge of base. Install insulated grounding bushings on terminations at equipment.

10. Warning Tape: Bury warning tape approximately 12 inches above all concrete-encased ducts and duct banks. Align tape parallel to and within 3 inches of the centerline of duct bank. Provide an additional warning tape for each 12-inch increment of duct-bank width over a nominal 18 inches. Space additional tapes 12 inches apart, horizontally.

I. Direct-Buried Duct Banks:

1. Support ducts on duct separators coordinated with duct size, duct spacing, and outdoor temperature.

2. Secure separators to earth and to ducts to prevent displacement during backfill and yet permit linear duct movement due to expansion and contraction as temperature changes. Stagger spacers approximately 6 inches between tiers.

3. Excavate trench bottom to provide firm and uniform support for duct bank. Prepare trench bottoms as specified in Division 31 Section "Earth Moving" for pipes less than 6 inches in nominal diameter.

4. Install backfill as specified in Division 31 Section "Earth Moving."

5. After installing first tier of ducts, backfill and compact. Start at tie-in point and work toward end of duct run, leaving ducts at end of run free to move with expansion and contraction as temperature changes during this process. Repeat procedure after placing each tier. After placing last tier, hand-place backfill to 4 inches over ducts and hand tamp. Firmly tamp backfill around ducts to provide maximum supporting strength. Use hand tamper only. After placing controlled backfill over final tier, make final duct

connections at end of run and complete backfilling with normal compaction as specified in Division 31 Section "Earth Moving."

6. Install ducts with a minimum of 3 inches between ducts for like services and 6 inches between power and signal ducts.

7. Depth: Install top of duct bank at least 36 inches below finished grade, unless otherwise indicated.

8. Set elevation of bottom of duct bank below the frost line.

9. Install manufactured duct elbows for stub-ups at poles and equipment and at building entrances through the floor, unless otherwise indicated. Encase elbows for stub-up ducts throughout the length of the elbow.

10. Install manufactured rigid steel conduit elbows for stub-ups at poles and equipment and at building entrances through the floor.

    a. Couple steel conduits to ducts with adapters designed for this purpose, and encase coupling with 3 inches of concrete.

    b. For equipment mounted on outdoor concrete bases, extend steel conduit horizontally a minimum of 60 inches from edge of equipment pad or foundation. Install insulated grounding bushings on terminations at equipment.

11. Warning Planks: Bury warning planks approximately 12 inches above direct-buried ducts and duct banks, placing them 24 inches o.c. Align planks along the width and along the centerline of duct bank. Provide an additional plank for each 12-inch increment of duct-bank width over a nominal 18 inches. Space additional planks 12 inches apart, horizontally.

J. Inspection: Prior to or during inspection by Authority Having Jurisdiction for approval and prior to beginning concrete pour, Engineer shall inspect underground duct installation for Engineer approval.

3.05 INSTALLATION OF CONCRETE MANHOLES, HANDHOLES, AND BOXES

A. Precast Concrete Handhole and Manhole Installation:

1. Comply with ASTM C 891, unless otherwise indicated.

2. Install units level and plumb and with orientation and depth coordinated with connecting ducts to minimize bends and deflections required for proper entrances.

3. Unless otherwise indicated, support units on a level bed of crushed stone or gravel, graded from 1-inch sieve to No. 4 sieve and compacted to same density as adjacent undisturbed earth.

B. Elevations:

1. Manhole Roof: Install with rooftop at least 15 inches below finished grade.

2. Manhole Frame: In paved areas and traffic ways, set frames flush with finished grade. Set other manhole frames 1 inch above finished grade.

3. Handhole Covers: In paved areas and traffic ways, set surface flush with finished grade. Set covers of other handholes 1 inch above finished grade.

4. Where indicated, cast handhole cover frame integrally with handhole structure.

C. Drainage: Install drains in bottom of manholes where indicated. Coordinate with drainage provisions indicated.

D. Manhole Access: Circular opening in manhole roof; sized to match cover size.

1. Install chimney, constructed of precast concrete collars and rings to support frame and cover and to connect cover with manhole roof opening. Provide moisture-tight masonry joints and waterproof grouting for cast-iron frame to chimney.

E. Waterproofing: Apply waterproofing to exterior surfaces of manholes after concrete has cured at least three days. Waterproofing materials and installation are specified in Division 07 Section "Elastomeric Sheet Waterproofing." After ducts have been connected and grouted, and before backfilling, waterproof joints and connections and touch up abrasions and scars. Waterproof exterior of manhole chimneys after mortar has cured at least three days.

F. Damp proofing: Apply damp proofing to exterior surfaces of manholes after concrete has cured at least three days. Damp proofing materials and installation are specified in Division 07 Section "Bituminous Damp proofing." After ducts have been connected and grouted, and before backfilling, damp proof joints and connections and touch up abrasions and scars. Damp proof exterior of manhole chimneys after mortar has cured at least three days.

G. Hardware: Install removable hardware, including pulling eyes, cable stanchions, and cable arms, and insulators, as required for installation and support of cables and conductors and as indicated.

H. Field-Installed Bolting Anchors in Manholes and Concrete Handholes: Do not drill deeper than 3-7/8 inches for manholes and 2 inches for handholes, for anchor bolts installed in the field. Use a minimum of two anchors for each cable stanchion.

I. Warning Sign: Install "Confined Space Hazard" warning sign on the inside surface of each manhole cover.

3.06 INSTALLATION OF HANDHOLES AND BOXES OTHER THAN PRECAST CONCRETE

A. Install handholes and boxes level and plumb and with orientation and depth coordinated with connecting ducts to minimize bends and deflections required for proper entrances. Use box extension if required to match depths of ducts, and seal joint between box and extension as recommended by the manufacturer.

B. Unless otherwise indicated, support units on a level bed of crushed stone or gravel, graded from 1/2-inch sieve to No. 4 sieve and compacted to same density as adjacent undisturbed earth.

C. Elevation: In paved areas and traffic ways, set so cover surface will be flush with finished grade. Set covers of other handholes 1 inch above finished grade.

D. Install removable hardware, including pulling eyes, cable stanchions, cable arms, and insulators, as required for installation and support of cables and conductors and as indicated. Select arm lengths to be long enough to provide spare space for future cables, but short enough to preserve adequate working clearances in the enclosure.

E. Field-cut openings for ducts and conduits according to enclosure manufacturer's written instructions. Cut wall of enclosure with a tool designed for material to be cut. Size holes for terminating fittings to be used, and seal around penetrations after fittings are installed.

F. For enclosures installed in asphalt paving and subject to occasional, non-deliberate, heavy-vehicle loading, form and pour a concrete ring encircling, and in contact with, enclosure and with top surface screeded to top of box cover frame. Bottom of ring shall rest on compacted earth.

1. Concrete: 3000 psi, 28-day strength, complying with Division 03 Section "Cast-in-Place Concrete," with a troweled finish.

2. Dimensions: 10 inches wide by 12 inches deep.

3.07 GROUNDING

A. Ground underground ducts and utility structures according to Division 26 Section "Grounding and Bonding for Electrical Systems."

3.08 FIELD QUALITY CONTROL

A. Perform the following tests and inspections and prepare test reports:

1. Demonstrate capability and compliance with requirements on completion of installation of underground ducts and utility structures.

2. Pull aluminum or wood test mandrel through duct to prove joint integrity and test for out-of-round duct. Provide mandrel equal to 80 percent fill of duct. If obstructions are indicated, remove obstructions and retest.

3. Test manhole grounding to ensure electrical continuity of grounding and bonding connections. Measure and report ground resistance as specified in Division 26 Section "Grounding and Bonding for Electrical Systems."

B. Correct deficiencies and retest as specified above to demonstrate compliance.

3.09 TRENCHES:

A. Trenches shall be in as straight and direct a line as possible. Routes through unstable soil such as mud, shifting soils, or other hazards should be avoided. Underground conduit systems shall not be installed within 5 feet of any building foundation, swimming pool, etc., except for where service conduit merges to intercept the service equipment.

3.10 PVC INSTALLATION:

A. The ends of the conduit shall be plugged during construction to prevent the entrance of foreign matter.

B. All ends, joints and internal finish of the conduit shall be free of sharp edges or burrs which could damage the cable.

C. All buried joints shall be glued with cement as recommended by the conduit manufactures.

D. Any change in direction between lengths of straight rigid conduit greater than 5 degrees shall be made in electrical sweeps, or with a very gradual sweeping change of direction. Any single run of conduit will contain no more than two 90 degree sweeps. If the secondary runs of conduit are less than 150 feet in length then schedule 80, PVC sweeps are acceptable. For runs of conductor sized 500MCM and larger that exceed 150 feet in length, all sweeps shall be steel. For runs of conductor smaller than 500MCM size and that exceed 200 feet in length, all 90º sweeps shall be steel.

3.11 CLEANING

A. Pull leather-washer-type duct cleaner, with graduated washer sizes, through full length of ducts. Follow with rubber duct swab for final cleaning and to assist in spreading lubricant throughout ducts.

B. Clean internal surfaces of manholes, including sump. Remove foreign material.

END OF SECTION 26 05 43

THIS PAGE WAS LEFT BLANK INTENTIONALLY

26 05 53

IDENTIFICATION FOR ELECTRICAL SYSTEMS

PART 1 - GENERAL

1.01 RELATED DOCUMENTS

A. Drawings and general provisions of the Contract, including General and Supplementary Conditions and Division 01 Specification Sections, apply to this Section.

1.02 SUMMARY

A. Section Includes:

1. Identification for raceways.
2. Identification of power and control cables.
3. Identification for conductors.
4. Underground-line warning tape.
5. Warning labels and signs.
6. Instruction signs.
7. Equipment identification labels.
8. Miscellaneous identification products.
9. Identification of Boxes, Junction Boxes and Pull Boxes
10. Identification of Switchboards, Motor Control Center, Panelboard, transformers, disconnecting means, Timer and etc.

1.03 SUBMITTALS

A. Product Data: For each electrical identification product indicated.

B. Samples: For each type of label and sign to illustrate size, colors, lettering style, mounting provisions riveted to the metal surface, and graphic features of identification products.

C. Identification Schedule: An index of nomenclature of electrical equipment and system components used in identification signs and labels.

1.04 QUALITY ASSURANCE

A. Comply with ANSI A13.1.

B. Comply with NFPA 70.

C. Comply with 29 CFR 1910.144 and 29 CFR 1910.145.

D. Comply with ANSI Z535.4 for safety signs and labels.

E. Adhesive-attached labeling materials, including label stocks, laminating adhesives, and inks used by label printers, shall comply with UL 969.

1.05 COORDINATION

A. Coordinate identification names, abbreviations, colors, and other features with requirements in other Sections requiring identification applications, Drawings, Shop Drawings, manufacturer's wiring diagrams, and the Operation and Maintenance Manual; and with those required by codes, standards, and 29 CFR 1910.145. Use consistent designations throughout Project.

B. Coordinate installation of identifying devices with completion of covering and painting of surfaces where devices are to be applied.

C. Coordinate installation of identifying devices with location of access panels and doors.

D. Install identifying devices before installing acoustical ceilings and similar concealment.

PART 2 - PRODUCTS

2.01 POWER RACEWAY IDENTIFICATION MATERIALS

A. Comply with ANSI A13.1 for minimum size of letters for legend and for minimum length of color field for each raceway size.

B. Colors for Raceways Carrying Circuits at 600 V or Less:

1. Black letters on an orange field.

2. Legend: Indicate voltage and system or service type.

C. Colors for Raceways Carrying Circuits at More Than 600 V:

1. Black letters on an orange field.

2. Legend: "DANGER CONCEALED HIGH VOLTAGE WIRING" with 3-inch- high letters on 20-inch centers.

D. Self-Adhesive Vinyl Labels for Raceways Carrying Circuits at 600 V or Less: Preprinted, flexible label laminated with a clear, weather- and chemical-resistant coating and matching wraparound adhesive tape for securing ends of legend label.

E. Snap-Around Labels for Raceways Carrying Circuits at 600 V or Less: Slit, pre-tensioned, flexible, preprinted, color-coded acrylic sleeve, with diameter sized to suit diameter of raceway or cable it identifies and to stay in place by gripping action.

F. Snap-Around, Color-Coding Bands for Raceways Carrying Circuits at 600 V or Less: Slit, pre-tensioned, flexible, solid-colored acrylic sleeve, 2 inches long, with diameter sized to suit diameter of raceway or cable it identifies and to stay in place by gripping action.

G. Tape and Stencil for Raceways Carrying Circuits More Than 600 V: 4-inch-wide black stripes on 10-inch centers diagonally over orange background that extends full length of raceway or duct and is 12 inches wide. Stop stripes at legends.

H. Metal Tags: Brass or aluminum, 2 by 2 by 0.05 inch, with stamped legend, punched for use with self-locking cable tie fastener.

I. Write-On Tags: Polyester tag, 0.010 inch thick, with corrosion-resistant grommet and cable tie for attachment to conductor or cable.

1. Marker for Tags: Permanent, waterproof, black ink marker recommended by tag manufacturer.

2. Marker for Tags: Machine-printed, permanent, waterproof, black ink marker recommended by printer manufacturer.

2.02 ARMORED AND METAL-CLAD CABLE IDENTIFICATION MATERIALS

A. Comply with ANSI A13.1 for minimum size of letters for legend and for minimum length of color field for each raceway and cable size.

B. Colors for Raceways Carrying Circuits at 600 V and Less:

1. Black letters on an orange field.

2. Legend: Indicate voltage and system or service type.

C. Colors for Raceways Carrying Circuits at More Than 600 V:

1. Black letters on an orange field.

2. Legend: "DANGER CONCEALED HIGH VOLTAGE WIRING" with 3-inch- high letters on 20-inch centers.

D. Self-Adhesive Vinyl Labels: Preprinted, flexible label laminated with a clear, weather- and chemical-resistant coating and matching wraparound adhesive tape for securing ends of legend label.

A. Self-Adhesive Vinyl Tape: Colored, heavy duty, waterproof, fade resistant; 2 inches wide; compounded for outdoor use.

2.03 POWER AND CONTROL CABLE IDENTIFICATION MATERIALS

A. Comply with ANSI A13.1 for minimum size of letters for legend and for minimum length of color field for each raceway and cable size.

B. Self-Adhesive Vinyl Labels: Preprinted, flexible label laminated with a clear, weather- and chemical-resistant coating and matching wraparound adhesive tape for securing ends of legend label.

C. Metal Tags: Brass or aluminum, 2 by 2 by 0.05 inch, with stamped legend, punched for use with self-locking cable tie fastener.

D. Write-On Tags: Polyester tag, 0.010-inch-thick, with corrosion-resistant grommet and cable tie for attachment to conductor or cable.

1. Marker for Tags: Permanent, waterproof, black ink marker recommended by tag manufacturer.

2. Marker for Tags: Machine-printed, permanent, waterproof, black ink marker recommended by printer manufacturer.

E. Snap-Around Labels: Slit, pre-tensioned, flexible, preprinted, color-coded acrylic sleeve, with diameter sized to suit diameter of raceway or cable it identifies and to stay in place by gripping action.

A. Snap-Around, Color-Coding Bands: Slit, pre-tensioned, flexible, solid-colored acrylic sleeve, 2 inches long, with diameter sized to suit diameter of raceway or cable it identifies and to stay in place by gripping action.

2.04 CONDUCTOR IDENTIFICATION MATERIALS

A. Color-Coding Conductor Tape: Colored, self-adhesive vinyl tape not less than 3 mils thick by 1 to 2 inches wide.

B. Self-Adhesive Vinyl Labels: Preprinted, flexible label laminated with a clear, weather- and chemical-resistant coating and matching wraparound adhesive tape for securing ends of legend label.

C. Snap-Around Labels: Slit, pre-tensioned, flexible, preprinted, color-coded acrylic sleeve, with diameter sized to suit diameter of raceway or cable it identifies and to stay in place by gripping action.

D. Snap-Around, Color-Coding Bands: Slit, pre-tensioned, flexible, solid-colored acrylic sleeve, 2 inches long, with diameter sized to suit diameter of raceway or cable it identifies and to stay in place by gripping action.

E. Marker Tapes: Vinyl or vinyl-cloth, self-adhesive wraparound type, with circuit identification legend machine printed by thermal transfer or equivalent process.

F. Write-On Tags: Polyester tag, 0.010-inch-thick, with corrosion-resistant grommet and cable tie for attachment to conductor or cable.

1. Marker for Tags: Permanent, waterproof, black ink marker recommended by tag manufacturer.

2. Marker for Tags: Machine-printed, permanent, waterproof, black ink marker recommended by printer manufacturer.

A. All conductors shall have the color of insulation for the entire length. Do not use electrical tape to identify the colors. This applies in all sizes.

2.05 FLOOR MARKING TAPE

A. 2-inch- wide, 5-mil pressure-sensitive vinyl tape, with black and white stripes and clear vinyl overlay.

2.06 UNDERGROUND-LINE WARNING TAPE

A. Tape:

1. Recommended by manufacturer for the method of installation and suitable to identify and locate underground electrical and communications utility lines.

2. Printing on tape shall be permanent and shall not be damaged by burial operations.

3. Tape material and ink shall be chemically inert, and not subject to degrading when exposed to acids, alkalis, and other destructive substances commonly found in soils.

A. Color and Printing:

1. Comply with ANSI Z535.1 through ANSI Z535.5.

2. Inscriptions for Red-Colored Tapes: ELECTRIC LINE, HIGH VOLTAGE.

3. Inscriptions for Orange-Colored Tapes: TELEPHONE, COMMUNICATIONS CABLE, OPTICAL FIBER CABLE.

2.07 WARNING LABELS AND SIGNS

A. Comply with NFPA 70 and 29 CFR 1910.145.

B. Self-Adhesive Warning Labels: Factory-printed, multicolor, pressure-sensitive adhesive labels, configured for display on front cover, door, or other access to equipment unless otherwise indicated.

C. Baked-Enamel Warning Signs:

1. Preprinted aluminum signs, punched or drilled for fasteners, with colors, legend, and size required for application.

2. 1/4-inch grommets in corners for mounting.

3. Nominal size, 7 by 10 inches.

D. Warning label and sign shall include, but are not limited to, the following legends:

E. Multiple Power Source Warning: "DANGER - ELECTRICAL SHOCK HAZARD - EQUIPMENT HAS MULTIPLE POWER SOURCES."

1. Workspace Clearance Warning: "WARNING - OSHA REGULATION - AREA IN FRONT OF ELECTRICAL EQUIPMENT MUST BE KEPT CLEAR FOR 36 INCHES."

2.08 EQUIPMENT IDENTIFICATION LABELS

A. Adhesive Film Label: Machine printed, in black, by thermal transfer or equivalent process. Minimum letter height shall be 3/8 inch. No adhesive is strictly prohibited.

B. Adhesive Film Label with Clear Protective Overlay: Machine printed, in black, by thermal transfer or equivalent process. Minimum letter height shall be 3/8 inch. Overlay shall provide a weatherproof and UV-resistant seal for label. No adhesive is strictly prohibited.

C. Punch or drilled riveted Engraved, Laminated Acrylic or Melamine Label: Adhesive backed, with white letters on a dark-gray background. Minimum letter height shall be 3/8 inch. No adhesive is strictly prohibited.

D. Engraved, Laminated Acrylic or Melamine Label: Punched or drilled for screw mounting. White letters on a dark-gray background. Minimum letter height shall be 3/8 inch. No adhesive is strictly prohibited.

E. Stenciled Legend: In non-fading, waterproof, black ink or paint. Minimum letter height shall be 1 inch.

F. Only use drilled/punched riveted label on equipment.

2.09 CABLE TIES

A. General-Purpose Cable Ties: Fungus inert, self-extinguishing, one piece, self-locking, Type 6/6 nylon.

1. Minimum Width: 3/16 inch.

2. Tensile Strength at 73 deg F, According to ASTM D 638: 12,000 psi.

3. Temperature Range: Minus 40 to plus 185 deg F.

4. Color: Black except where used for color-coding.

B. UV-Stabilized Cable Ties: Fungus inert, designed for continuous exposure to exterior sunlight, self-extinguishing, one piece, self-locking, Type 6/6 nylon.

1. Minimum Width: 3/16 inch.

1. Tensile Strength at 73 deg F, According to ASTM D 638: 12,000 psi.

2. Temperature Range: Minus 40 to plus 185 deg F.

3. Color: Black.

C. Plenum-Rated Cable Ties: Self-extinguishing, UV stabilized, one-piece, self-locking.

1. Minimum Width: 3/16 inch.

1. Tensile Strength at 73 deg F, According to ASTM D 638: 7000 psi.

2. UL 94 Flame Rating: 94V-0.

3. Temperature Range: Minus 50 to plus 284 deg F.

4. Color: Black.

2.10 MISCELLANEOUS IDENTIFICATION PRODUCTS

A. Paint: Comply with requirements in Division 09 painting Sections for paint materials and application requirements. Select paint system applicable for surface material and location (exterior or interior).

B. Fasteners for Labels and Signs: Self-tapping, stainless-steel screws or stainless-steel machine screws with nuts and flat and lock washers.

PART 3 - EXECUTION

3.01 INSTALLATION

A. Verify identity of each item before installing identification products.

B. Location: Install identification materials and devices at locations for most convenient viewing without interference with operation and maintenance of equipment.

C. Apply identification devices to surfaces that require finish after completing finish work.

D. Self-Adhesive Identification Products: Clean surfaces before application, using materials and methods recommended by manufacturer of identification device.

E. Attach signs and plastic labels that are not self-adhesive type with mechanical fasteners appropriate to the location and substrate.

F. System Identification Color-Coding Bands for Raceways and Cables: Each color-coding band shall completely encircle cable or conduit. Place adjacent bands of two-color markings in contact, side by side. Locate bands at changes in direction, at penetrations of walls and floors, at 50-foot maximum intervals in straight runs, and at 25-foot maximum intervals in congested areas.

G. Aluminum Wraparound Marker Labels and Metal Tags: Secure tight to surface of conductor or cable at a location with high visibility and accessibility.

H. Cable Ties: For attaching tags. Use general-purpose type, except as listed below:

1. Outdoors: UV-stabilized nylon.

2. In Spaces Handling Environmental Air: Plenum rated.

I. Underground-Line Warning Tape: During backfilling of trenches install continuous underground-line warning tape directly above line at 6 to 8 inches (below finished grade. Use multiple tapes where width of multiple lines installed in a common trench exceeds 16 inches overall.

J. Painted Identification: Comply with requirements in Division 09 painting Sections for surface preparation and paint application.

3.02 IDENTIFICATION SCHEDULE

A. Identification of Electrical Systems

1. Identify all equipment and circuit breakers.

2. Identify all J-box covers with circuit numbers.

3. On all device wall plates, on inside of plate, indicate panel and circuit number feeding the device.

4. All electrical panels shall have type written panel schedule with room descriptions using actual room signage numbers.

5. Electrical systems shall be identified by painted junction boxes and covers with the following scheme:

a. Lighting system: Yellow

b. Emergency Power: Red

c. 120V Power: Blue

d. HVAC system power: Green

6. Electrical panel identification shall include the following:

a. Panel Name

b. Voltage

c. Amperage

d. General description such as: Lighting Area A or Power Area C. Refer to Drawings.

e. Appropriately colored for emergency.

f. Feeder panel designation must be clearly identified.

B. Accessible Raceways and Metal-Clad Cables, 600 V or Less, for Service, Feeder, and Branch Circuits More Than 30 A, and 120 V to ground: Identify with self-adhesive vinyl label. Install labels at 10-foot maximum intervals.

C. Accessible Raceways and Cables within Buildings: Identify the covers of each junction and pull box of the following systems with self-adhesive vinyl labels with the wiring system legend and system voltage. System legends shall be as follows:

1. Emergency Power.

2. Power.

D. Power-Circuit Conductor Identification, 600 V or Less: For conductors in vaults, pull and junction boxes, manholes, and hand-holes, use color-coding conductor tape to identify the phase.

1. Color-Coding for Phase and Voltage Level Identification, 600 V or Less: Use colors listed below for ungrounded service, feeder, and branch-circuit conductors.

a. New Conductors: Insulation shall be fully and continuously colored. Phase taping is not acceptable.

b. Existing Conductors Re-terminated: Use Scotch #35 Vinyl Electrical Color-Coding Tape. No substitutions. Material to be 7-mil polyvinyl chloride (PVC), 3/4"-wide tape with UL-510 rating to 600 VAC. Field apply two full laps without offset at each start and finish, and with 3/8"-over-lap for all intermediate laps using 5 lb/in tension. Start tape no further than 1-1/4" from termination and provide minimum cover length of:

1) #2 AWG and smaller conductors: 6 inches.

2) #1/0 AWG and larger conductors: 8 inches.

c. Colors for 208/120-V Circuits:

1) Phase A: Black.

2) Phase B: Red.

3) Phase C: Blue.

4) Neutral: White

5) Ground: Green

d. Colors for 480/277-V Circuits:

1) Phase A: Brown.

2) Phase B: Purple

3) Phase C: Yellow.

4) Neutral: Gray/White

5) Ground: Green

E. Install instructional sign including the color code for grounded and ungrounded conductors using adhesive-film-type labels.

F. Conductors to Be Extended in the Future: Attach marker tape to conductors and list source.

G. Auxiliary Electrical Systems Conductor Identification: Identify field-installed alarm, control, and signal connections.

1. Identify conductors, cables, and terminals in enclosures and at junctions, terminals, and pull points. Identify by system and circuit designation.

2. Use system of marker tape designations that is uniform and consistent with system used by manufacturer for factory-installed connections.

3. Coordinate identification with Project Drawings, manufacturer's wiring diagrams, and the Operation and Maintenance Manual.

H. Locations of Underground Lines: Identify with underground-line warning tape for power, lighting, communication, and control wiring and optical fiber cable.

1. Limit use of underground-line warning tape to direct-buried cables.

2. Install underground-line warning tape for both direct-buried cables and cables in raceway.

I. Workspace Indication: Install floor marking tape to show working clearances in the direction of access to live parts. Workspace shall be as required by NFPA 70 and 29 CFR 1926.403 unless otherwise indicated. Do not install at flush-mounted panelboards and similar equipment in finished spaces.

J. Warning Labels for Indoor Cabinets, Boxes, and Enclosures for Power and Lighting: Self-adhesive warning labels.

1. Comply with 29 CFR 1910.145.

2. Identify system voltage with black letters on an orange background.

3. Apply to exterior of door, cover, or other access.

4. For equipment with multiple power or control sources, apply to door or cover of equipment including, but not limited to, the following:

a. Power transfer switches.

b. Controls with external control power connections.

K. Operating Instruction Signs: Install instruction signs to facilitate proper operation and maintenance of electrical systems and items to which they connect. Install instruction signs with approved legend where instructions are needed for system or equipment operation.

L. Emergency Operating Instruction Signs: Install instruction signs with white legend on a red background with minimum 3/8-inch- high letters for emergency instructions at equipment used for power transfer.

M. Equipment Identification Labels: On each unit of equipment, install unique designation label that is consistent with wiring diagrams, schedules, and the Operation and Maintenance Manual. Apply labels to disconnect switches and protection equipment, central or master units, control panels, control stations, terminal cabinets, and racks of each system. Systems include power, lighting, control, communication, signal, monitoring, and alarm systems unless equipment is provided with its own identification.

1. Labeling Instructions:

    a. Indoor Equipment: Self-adhesive, engraved, laminated acrylic or melamine label. Unless otherwise indicated, provide a single line of text with 1/2-inch- high letters on 1-1/2-inch- high label; where two lines of text are required, use labels 2 inches high.

    b. Outdoor Equipment: Engraved, laminated acrylic or melamine label.

    c. Elevated Components: Increase sizes of labels and letters to those appropriate for viewing from the floor.

    d. Unless provided with self-adhesive means of attachment, fasten labels with appropriate mechanical fasteners that do not change the NEMA or NRTL rating of the enclosure.

2. Equipment to Be Labeled: Use punched, drilled riveted label or identifications

    a. Panelboards: Typewritten hard thick card stock paper directory of circuits in the location provided by panelboard manufacturer. Panelboard identification shall be laminated acrylic or melamine label.

    b. Enclosures and electrical cabinets.

    c. Access doors and panels for concealed electrical items.

    d. Switchboards.

    e. Transformers: Label that includes tag designation shown on Drawings for the transformer, feeder, and panelboards or equipment supplied by the secondary.

    f. Substations.

    g. Emergency system boxes and enclosures.

    h. Motor-control centers.

i. Enclosed switches.

j. Enclosed circuit breakers.

k. Enclosed controllers.

l. Variable-speed controllers.

m. Push-button stations.

n. Power transfer equipment.

o. Contactors.

p. Remote-controlled switches, dimmer modules, and control devices.

q. Battery-inverter units.

r. Battery racks.

s. Power-generating units.

t. Monitoring and control equipment.

END OF SECTION 26 05 33

this page left blank intentionally

26 05 73

OVERCURRENT PROTECTIVE DEVICE COORDINATION AND ARC FLASH STUDY

PART 1 - GENERAL

1.01 RELATED DOCUMENTS

A. Drawings and general provisions of the Contract, including General and Supplementary Conditions and Division 01 Specification Sections, apply to this Section.

1.02 SUMMARY

A. This Section includes computer-based, fault-current, overcurrent protective device coordination selective studies, and arc flash study. Protective devices shall be set based on results of the protective device coordination selective study.

1. Coordination of series-rated devices is permitted where indicated on Drawings.

2. Retain a qualified professional/engineering firm to assist in the development and implementation of the arc flash and protection coordination selective study.

1.03 SUBMITTALS

A. Product Data: For computer software program to be used for studies.

B. Product Certificates: For coordination-study and fault-current-study computer software programs, certifying compliance with IEEE 399.

C. Qualification Data: For coordination-selective study specialist.

D. Other Action Submittals: The following submittals shall be made after the approval process for system protective devices has been completed. Submittals may be in digital form.

1. Coordination- selective study input data, including completed computer program input data sheets.

2. Study and Equipment Evaluation Reports.

3. Coordination- Selective Study Report.

4. Electrical One-line diagram

1.04 QUALITY ASSURANCE

A. Studies shall use computer programs that are distributed nationally and are in wide use. Software algorithms shall comply with requirements of standards and guides specified in this Section. Manual calculations are not acceptable.

B. Coordination- Selective Study Specialist Qualifications: An entity experienced in the application of computer software used for studies, having performed successful studies of similar magnitude on electrical distribution systems using similar devices.

1. Professional engineer, licensed in the state where Project is located, shall be responsible for the study. All elements of the study shall be performed under the direct supervision, Fort Bend County representative.

C. Comply with IEEE 242 for short-circuit currents and coordination time intervals.

D. Comply with IEEE 399 for general study procedures.

E. The entity shall have an employee that is certified, train and skilled to perform this type of test and be able to interpret the curve and settings.

PART 2 - PRODUCTS

2.01 COMPUTER SOFTWARE DEVELOPERS

A. Available Computer Software Developers: Subject to compliance with requirements, companies offering computer software programs that may be used in the Work include, but are not limited to, the following:

B. Computer Software Developers: Subject to compliance with requirements, provide products by one of the following:

C. Basis-of-Design Product: Subject to compliance with requirements, provide the product indicated on Drawings or a comparable product by one of the following:

1. CGI CYME.

2. EDSA Micro Corporation.

3. ESA Inc.

4. Operation Technology, Inc.

5. SKM Systems Analysis, Inc.

2.02 COMPUTER SOFTWARE PROGRAM REQUIREMENTS

A. Comply with IEEE 399.

B. Analytical features of fault-current-study computer software program shall include "mandatory," "very desirable," and "desirable" features as listed in IEEE 399.

C. Computer software program shall be capable of plotting and diagramming time-current-characteristic curves as part of its output. Computer software program shall report device settings and ratings of all overcurrent protective devices and shall demonstrate selective coordination by computer-generated, time-current coordination plots.

PART 3 - EXECUTION

3.01 EXAMINATION

A. Examine Project overcurrent protective device submittals for compliance with electrical distribution system coordination requirements and other conditions affecting performance. Devices to be coordinated are indicated on Drawings.

1. Proceed with coordination selective study only after relevant equipment submittals have been assembled. Overcurrent protective devices that have not been submitted and approved prior to coordination study may not be used in study.

3.02 POWER SYSTEM DATA

A. Gather and tabulate the following input data to support coordination study:

1. Product Data for overcurrent protective devices specified in other Division 26 Sections and involved in overcurrent protective device coordination studies. Use equipment designation tags that are consistent with electrical distribution system diagrams, overcurrent protective device submittals, input and output data, and recommended device settings.

2. Impedance of utility service entrance.

3. Electrical Distribution System Diagram: In hard-copy and electronic-copy formats, showing the following:

a. Circuit-breaker and fuse-current ratings and types.

b. Relays and associated power and current transformer ratings and ratios.

c. Transformer kilovolt amperes, primary and secondary voltages, connection type, impedance, and X/R ratios.

d. Generator kilovolt amperes, size, voltage, and source impedance.

e. Cables: Indicate conduit material, sizes of conductors, conductor material, insulation, and length.

f. Busway ampacity and impedance.

g. Motor horsepower and code letter designation according to NEMA MG 1.

4. Data sheets to supplement electrical distribution system diagram, cross-referenced with tag numbers on diagram, showing the following:

a. Special load considerations, including starting inrush currents and frequent starting and stopping.

b. Transformer characteristics, including primary protective device, magnetic inrush current, and overload capability.

c. Motor full-load current, locked rotor current, service factor, starting time, type of start, and thermal-damage curve.

d. Generator thermal-damage curve.

e. Ratings, types, and settings of utility company's overcurrent protective devices.

f. Special overcurrent protective device settings or types stipulated by utility company.

g. Time-current-characteristic curves of devices indicated to be coordinated.

h. Manufacturer, frame size, interrupting rating in amperes rms symmetrical, ampere or current sensor rating, long-time adjustment range, short-time adjustment range, and instantaneous adjustment range for circuit breakers.

i. Manufacturer and type, ampere-tap adjustment range, time-delay adjustment range, instantaneous attachment adjustment range, and current transformer ratio for overcurrent relays.

j. Panelboards, switchboards, motor-control center ampacity, and interrupting rating in amperes rms symmetrical.

3.03 FAULT-CURRENT STUDY

A. Calculate the maximum available short-circuit current in amperes rms symmetrical at circuit-breaker positions of the electrical power distribution system. The calculation shall be for a current immediately after initiation and for a three-phase bolted short circuit at each of the following:

1. Switchgear and switchboard bus.

2. Medium-voltage controller.

3. Motor-control center.

4. Distribution panelboard.

5. Branch circuit panelboard.

B. Study electrical distribution system from normal and alternate power sources throughout electrical distribution system for Project. Include studies of system-switching configurations and alternate operations that could result in maximum fault conditions.

C. Calculate momentary and interrupting duties on the basis of maximum available fault current.

D. Calculations to verify interrupting ratings of overcurrent protective devices shall comply with IEEE 141, IEEE 241 and IEEE 242.

1. Transformers:

a. ANSI C57.12.10.

b. ANSI C57.12.22.

c. ANSI C57.12.40.

d. IEEE C57.12.00.

e. IEEE C57.96.

2. Low-Voltage Circuit Breakers: IEEE 1015 and IEEE C37.20.1.

3. Low-Voltage Fuses: IEEE C37.46.

E. Study Report:

1. Show calculated X/R ratios and equipment interrupting rating (1/2-cycle) fault currents on electrical distribution system diagram.

2. Show interrupting (5-cycle) and time-delayed currents (6 cycles and above) on medium and high voltage breakers as needed to set relays and assess the sensitivity of overcurrent relays.

F. Equipment Evaluation Report:

1. For 600-V overcurrent protective devices, ensure that interrupting ratings are equal to or higher than calculated 1/2-cycle symmetrical fault current.

2. For devices and equipment rated for asymmetrical fault current, apply multiplication factors listed in the standards to 1/2-cycle symmetrical fault current.

3. Verify adequacy of phase conductors at maximum three-phase bolted fault currents; verify adequacy of equipment grounding conductors and grounding electrode conductors at maximum ground-fault currents. Ensure that short-circuit withstand ratings are equal to or higher than calculated 1/2-cycle symmetrical fault current.

3.04 COORDINATION SELECTIVE STUDY

A. Perform coordination study using approved computer software program. Prepare a written report using results of fault-current study. Comply with IEEE 399.

1. Calculate the maximum and minimum 1/2-cycle short-circuit currents.

2. Calculate the maximum and minimum interrupting duty (5 cycles to 2 seconds) short-circuit currents.

3. Calculate the maximum and minimum ground-fault currents.

B. Comply with IEEE 141 recommendations for fault currents and time intervals.

C. Transformer Primary Overcurrent Protective Devices:

1. Device shall not operate in response to the following:

   a. Inrush current when first energized.

   b. Self-cooled, full-load current or forced-air-cooled, full-load current, whichever is specified for that transformer.

   c. Permissible transformer overloads according to IEEE C57.96 if required by unusual loading or emergency conditions.

2. Device settings shall protect transformers according to IEEE C57.12.00, for fault currents.

D. Conductor Protection: Protect cables against damage from fault currents according to ICEA P-32-382, ICEA P-45-482, and conductor melting curves in IEEE 242. Demonstrate that equipment withstands the maximum short-circuit current for a time equivalent to the tripping time of the primary relay protection or total clearing time of the fuse. To determine temperatures that damage insulation, use curves from cable manufacturers or from listed standards indicating conductor size and short-circuit current.

E. Coordination-Selective Study Report: Prepare a written report indicating the following results of coordination study:

1. Tabular Format of Settings Selected for Overcurrent Protective Devices:

   a. Device tag.

   b. Relay-current transformer ratios; and tap, time-dial, and instantaneous-pickup values.

   c. Circuit-breaker sensor rating; and long-time, short-time, and instantaneous settings.

   d. Fuse-current rating and type.

   e. Ground-fault relay-pickup and time-delay settings.

2. Coordination Curves: Prepared to determine settings of overcurrent protective devices to achieve selective coordination. Graphically illustrate that adequate time separation exists between devices installed in series, including power utility company's upstream devices. Prepare separate sets of curves for the switching schemes and for emergency periods where the power source is local generation. Show the following information:

   a. Device tag.

   b. Voltage and current ratio for curves.

   c. Three-phase and single-phase damage points for each transformer.

   d. No damage, melting, and clearing curves for fuses.

e. Cable damage curves.

f. Transformer inrush points.

g. Maximum fault-current cutoff point.

F. Completed data sheets for setting of overcurrent protective devices.

3.05 ARC FLASH STUDY

A. A detailed arc flash study shall be performed to determine potential arc flash incident energies, arc flash boundaries, shock hazard boundaries and proper personal protective equipment (PPE) for all energized electrical system equipment tasks for the electrical systems studied. The calculations shall comply with NFPA-70E 2009, and IEEE-1584. Bolted short circuit calculations used in the above standards shall comply with ANSI C37.010, C37.13, C37.5, IEEE-141, and IEEE-399. The purpose of this study is to determine arc flash hazards in conformance with NFPA-70E and to provide a comprehensive software model of the electrical distribution system, which provides integral work permits and arc flash calculations in compliance with NFPA 70E Articles 130.1 and 130.3 for all equipment in the facility. The software program used in this study shall comply with the above standards. No substitutions in calculation methods will be allowed.

B. The arc flash study shall determine the following results for each system mode of operation developed in Section 1.3E (Modeling). The results shall be provided in spreadsheet format for each mode and electrical system location to provide easy viewing and comparison. Worst-case arc flash energy levels shall be flagged and the spreadsheet comparison table shall be capable of providing its output directly to high quality vinyl label printers. The calculations shall, as a minimum, include a comparison of both 100% and 85% arcing currents for low voltage equipment for each electrical system configuration or operating mode, indicating worst-case arc flash hazards. The spreadsheet results shall include:

1. Equipment name and voltage

2. Upstream equipment device name and ANSI function, i.e. 51/50, etc.

3. Equipment type, i.e. switchgear, MCC, Panel, VFD, etc.

4. Equipment arc gap

5. Bolted and estimated arcing fault current at the fault point (equipment) in symmetrical amperes. The estimated arcing current should be based on the arcing current equations used.

6. Trip time, opening time, and total clearing time (total Arc time) of the protective device

7. Worst-case arc flash boundary for each bus/equipment in the model

8. Worst-case arc flash hazard incident energy in cal/cm^2 for each bus/equipment in the model

9. Worst-case personal protective equipment (PPE) for each bus/equipment in the model

10. Working distances for up to five different distances showing items 7, 8, and 9 for each distance

11. Indicate "Danger/Hazardous" areas where incident energy is greater than 40 cal/cm2 and provide recommendations to reduced arc flash energy levels for these areas

12. Flag results where 85% arcing current provided worst-case results

13. Each mode of operation shall include a detailed write-up indicating areas where incident energy calculations and PPE requirements are higher than calculated in the normal operating mode.

C. Contractor shall provide a detailed arc flash analysis report including as a minimum:

1. Introduction

2. Methodology

3. Information Sources

4. Assumptions including generic substitutions when data cannot be field verified. This type of assumptions shall be documented in the report.

5. Arc Flash Energy and other consideration for various System Modes of Operation (maintenance mode, bus-tie, co-gen on/off, etc.)

6. Arc Energy at 100% and reduced currents

7. IEEE 1584-2002 Considerations.

8. Overcurrent Protective Device Changes, Replacements or Setting Changes implemented in study to reduce arc flash hazard exposure.

9. Explanation of Data in Arc Flash Hazard Report Tables

10. NFPA 70E Information

    a. Shock Hazards with covers removed.

    b. Shock Hazard Approach Boundaries.

        1) Limited Approach Boundary

        2) Restricted Approach Boundary

        3) Prohibited Approach Boundary

    c. Arc Flash Hazard Boundaries

11. Results of Arc Flash Hazard Analysis for high voltage, medium voltage and low voltage systems, including:

a. Working distances.

b. Energy Levels

c. PPE Requirements

d. Recommendations to reduce arc flash hazard energy and exposure.

12. Arc Flash Hazard Report

13. 3 Hard Copies

a. 1 Electronic Copy in WORD or Excel format and PDF (5.0 or later)

b. 1 Electronic copy in latest version of SKM format or its native software

14. Electronic file for Power System Modeling Software as developed and utilized for this analysis.

D. Contractor shall provide print labels for all equipment in the system from the project study file. Assume two (2) labels per equipment/bus in your estimate using 4" x 6" labels. The labels shall be UV resistant vinyl labels (white with orange warning strip and black letters) conforming to ANSI-Z 535. The labels shall be printable directly from the power system software utilized for the study.

E. The software shall provide complete integration of the one-line, database, short circuit and PDC and Arc flash functions. Software using separate short circuit, PDC, TCC or arc flash programs is not allowed. Spreadsheet calculations are not allowed. The purpose of this section is to ensure that the arc flash hazard calculations comply with NFPA-70E and IEEE-1584, and that the calculations are programmed with necessary requirements to help eliminate possible errors in the arc flash calculations. The additional purpose is to establish a detailed software model of the compliance with the OSHA requirements and NFPA 70E mandates. This model will serve as an integral part of Fort Bend County safety program by providing integral work permits and arc flash calculations in compliance with NFPA-70E Article 130.1(A)(2) for each electrical equipment in the facility.

1. Arc flash calculations shall be performed with enhanced IEEE-1584 equations, which eliminate voltage discontinuities and the non-conservative/average results of the standard equations. The purpose of this requirement is to ensure that the calculated incident energies are closer to actual test results insuring a conservative calculation minimizing personnel risk.

2. Arc flash calculations shall be based on the fastest clearing upstream protective device protecting the equipment for single sources and the slowest upstream protective device for multiple sources. The calculations shall automatically compare all series and parallel upstream protective devices in the system to determine the fastest series device or a conservative parallel clearing time.

3. The arc flash calculations shall include arc flash boundary, incident energy, PPE requirements, and working distances.

4. The arc flash calculations shall include calculations for all operating modes to ensure the worse arc flash magnitude.

5. The arc flash calculations shall provide integral "Work Tasks" for the listed equipment types. The tasks shall be derived from 70E Table 130.7(C)(9)(a) and be specific to the equipment type. Listed equipment types shall include:

   a. Switchgear, Switchboards, Panelboards, MCC, VFD, UPS, ATS, Interrupting Switch, NEMA E2 Contactor, Conductor, Open Air for 100-200 volt equipment.

   b. Switchgear, Switchboards, Panelboards, MCC, VFD, UPS, ATS, Interrupting Switch, NEMA E2 Contactor, Conductor, Open Air for 200-1000 volt equipment.

   c. Switchgear, MCC, VFD, UPS, ATS, Interrupting Switch, NEMA E2 Contactor, Conductor, Open Air for 1.0-5.0 kV equipment.

   d. Switchgear, MCC, VFD, ATS, Interrupting Switch, NEMA E2 Contactor, Conductor, Open Air for 5.0-15.0 kV equipment.

   e. Interrupting Switch, Conductor, and Open Air for 138 kV equipment.

6. Work Tasks shall have a user-defined library that provides the following customizable features for each work task:

   a. Work Tasks for each specific equipment type and voltage range

   b. Working distance units English or Metric

   c. Work distance for each task

   d. V-rated gloves and tool requirements

   e. Job description and procedures

   f. Safe work practices description

   g. Hazard Risk Category (HRC) reduction - HRC reduction can only be used based on a documented risk assessment as an integral part of a safety program.

END OF SECTION 26 05 73

this page left blank intentionally

26 09 23

LIGHTING CONTROL DEVICES

PART 1 - GENERAL

1.01 RELATED DOCUMENTS

A. Drawings and general provisions of the Contract, including General and Supplementary Conditions and Division 01 Specification Sections, apply to this Section.

1.02 SUMMARY

A. This Section includes the following lighting control devices:

1. Time switches.

2. Photoelectric switches.

3. Indoor occupancy sensors.

4. Lighting contactors.

5. Emergency shunt relays.

B. Related Sections include the following:

1. Division 26 Section "Wiring Devices" for wall-box dimmers, wall-switch occupancy sensors, and manual light switches.

1.03 DEFINITIONS

A. LED: Light-emitting diode.

B. PIR: Passive infrared.

1.04 SUBMITTALS

A. Product Data: For each type of product indicated.

B. Shop Drawings: Show installation details for occupancy and light-level sensors.

1. Interconnection diagrams showing field-installed wiring.

2. Provide Settings requirements available from the Owner standpoint.

3. Provide the software that will support the lighting controllers.

4. Software must have the ability to detect outages or no power to a branch circuit and graphic indicators.

C. Field quality-control test reports.

D. Operation and Maintenance Data: For each type of product to include in emergency, operation, and maintenance manuals.

1.05 QUALITY ASSURANCE

A. Electrical Components, Devices, and Accessories: Listed and labeled as defined in NFPA 70, Article 100, by a testing agency acceptable to authorities having jurisdiction, and marked for intended use.

1.06 COORDINATION

A. Coordinate layout and installation of ceiling-mounted devices with other construction that penetrates ceilings or is supported by them, including light fixtures, HVAC equipment, smoke detectors, fire-suppression system, and partition assemblies.

PART 2 - PRODUCTS

2.01 TIME SWITCHES

A. Manufacturers: Subject to compliance with requirements, provide products by one of the following:

1. Intermatic, Inc.

2. Leviton Mfg. Company Inc.

3. Lightolier Controls; a Genlyte Company.

4. Lithonia Lighting; Acuity Lighting Group, Inc.

5. Watt Stopper (The).

B. Electronic Time Switches: Electronic, solid-state programmable units with alphanumeric display; complying with UL 917.

C. Electromechanical-Dial Time Switches: Type complying with UL 917.

2.02 OUTDOOR PHOTOELECTRIC SWITCHES

A. Manufacturers: Subject to compliance with requirements, provide products by one of the following:

1. Intermatic, Inc.

2. Lithonia Lighting; Acuity Lighting Group, Inc.

3. Novitas, Inc.

4. TORK.

5. Watt Stopper (The).

2.03 INDOOR OCCUPANCY SENSORS

A. Manufacturers: Subject to compliance with requirements, provide products by one of the following:

1. Hubbell Lighting.

2. Leviton Mfg. Company Inc.

3. Lithonia Lighting; Acuity Lighting Group, Inc.

4. Watt Stopper (The).

B. General Description: Wall- or ceiling-mounting, solid-state units with a separate relay unit.

1. Operation: Unless otherwise indicated, turn lights on when covered area is occupied and off when unoccupied; with a time delay for turning lights off, adjustable over a minimum range of 1 to 15 minutes.

2. Sensor Output: Contacts rated to operate the connected relay, complying with UL 773A. Sensor shall be powered from the relay unit.

3. Relay Unit: Dry contacts rated for 20-A ballast load at 120- and 277-V ac, for 13-A tungsten at 120-V ac, and for 1 hp at 120-V ac. Power supply to sensor shall be 24-V dc, 150-mA, Class 2 power source as defined by NFPA 70.

4. Mounting:

a. Sensor: Suitable for mounting in any position on a standard outlet box.

b. Relay: Externally mounted through a 1/2-inch knockout in a standard electrical enclosure.

c. Time-Delay and Sensitivity Adjustments: Recessed and concealed behind hinged door.

5. Indicator: LED, to show when motion is being detected during testing and normal operation of the sensor.

6. Bypass Switch: Override the on function in case of sensor failure.

7. Automatic Light-Level Sensor: Adjustable from 2 to 200 fc; keep lighting off when selected lighting level is present.

C. Dual-Technology Type: Ceiling mounting; detect occupancy by using a combination of PIR and ultrasonic detection methods in area of coverage. Particular technology or combination of technologies that controls on-off functions shall be selectable in the field by operating controls on unit.

1. Sensitivity Adjustment: Separate for each sensing technology.

2. Detector Sensitivity: Detect occurrences of 6-inch-minimum movement of any portion of a human body that presents a target of not less than 36 sq. in., and detect a person of average size and weight moving not less than 12 inches in either a horizontal or a vertical manner at an approximate speed of 12 inches/s.

3. Detection Coverage (Standard Room): Detect occupancy anywhere within a circular area of 1000 sq. ft. when mounted on a 96-inch-high ceiling.

2.04 OUTDOOR MOTION SENSORS (PIR)

A. Manufacturers: Subject to compliance with requirements, provide products by one of the following:

B. Basis-of-Design Product: Subject to compliance with requirements, provide comparable product by one of the following:

1. Bryant Electric; a Hubbell Company.

2. Hubbell Lighting.

3. Lithonia Lighting; Acuity Lighting Group, Inc.

4. Watt Stopper (The).

C. Performance Requirements: Suitable for operation in ambient temperatures ranging from minus 40 to plus 130 deg F, rated as rain-tight according to UL 773A.

1. Operation: Turn lights on when sensing infrared energy changes between background and moving body in area of coverage; with a time delay for turning lights off, adjustable over a minimum range of 1 to 15 minutes.

2. Mounting:

    a. Sensor: Suitable for mounting in any position on a standard outdoor junction box.

    b. Relay: Internally mounted in a standard weatherproof electrical enclosure.

    c. Time-Delay and Sensitivity Adjustments: Recessed and concealed behind hinged door.

3. Bypass Switch: Override the on function in case of sensor failure.

4. Automatic Light-Level Sensor: Adjustable from 1 to 20 fc; keep lighting off during daylight hours.

D. Detector Sensitivity: Detect occurrences of 6-inch-minimum movement of any portion of a human body that presents a target of not less than 36 sq. in.

E. Lighting Fixture Mounted Sensor: Suitable for switching 300 W of tungsten load at 120- or 277-V ac.

F. Individually Mounted Sensor: Contacts rated to operate the connected relay, complying with UL 773A. Sensor shall be powered from the relay unit.

1. Relay Unit: Dry contacts rated for 20-A ballast load at 120- and 277-V ac, for 13-A tungsten at 120-V ac, and for 1 hp at 120-V ac. Power supply to sensor shall be 24-V dc, 150-mA, Class 2 power source as defined by NFPA 70.

2. Indicator: LED, to show when motion is being detected during testing and normal operation of the sensor.

2.05 LIGHTING CONTACTORS

A. Manufacturers: Subject to compliance with requirements, provide products by one of the following:

1. Square D

2. ASCO Power Technologies, LP; a division of Emerson Electric Co.

3. Eaton Electrical Inc.; Cutler-Hammer Products.

4. GE.

5. TORK.

B. Description: Electrically operated and mechanically held, combination type with non-fusible switch complying with NEMA ICS 2 and UL 508.

1. Current Rating for Switching: Listing or rating consistent with type of load served, including tungsten filament, inductive, and high-inrush ballast (ballast with 15 percent or less total harmonic distortion of normal load current).

2. Fault Current Withstand Rating: Equal to or exceeding the available fault current at the point of installation.

3. Enclosure: Comply with NEMA 250.

4. Provide with control and pilot devices matching the NEMA type specified for the enclosure.

C. BAS Interface: Provide hardware interface to enable the BAS to monitor and control lighting contactors.

1. Monitoring: On-off status.

2. Control: On-off operation.

2.06 CONDUCTORS AND CABLES

A. Power Wiring to Supply Side of Remote-Control Power Sources: Not smaller than No. 12 AWG. Comply with requirements in Division 26 Section "Low-Voltage Electrical Power Conductors and Cables."

B. Classes 2 and 3 Control Cable: Multi-conductor cable with stranded-copper conductors not smaller than No. 18 AWG. Comply with requirements in Division 26 Section "Low-Voltage Electrical Power Conductors and Cables."

C. Class 1 Control Cable: Multi-conductor cable with stranded-copper conductors not smaller than No. 14 AWG. Comply with requirements in Division 26 Section "Low-Voltage Electrical Power Conductors and Cables."

PART 3 - EXECUTION

3.01 SENSOR INSTALLATION

A. Install and aim sensors in locations to achieve not less than 90 percent coverage of areas indicated. Do not exceed coverage limits specified in manufacturer's written instructions.

3.02 CONTACTOR INSTALLATION

A. Mount electrically held lighting contactors with elastomeric isolator pads, to eliminate structure-borne vibration, unless contactors are installed in an enclosure with factory-installed vibration isolators.

3.03 WIRING INSTALLATION

A. Wiring Method: Comply with Division 26 Section "Low-Voltage Electrical Power Conductors and Cables." Minimum conduit size shall be 1/2 inch.

B. Wiring within Enclosures: Comply with NECA 1. Separate power-limited and non-power limited conductors according to conductor manufacturer's written instructions.

C. Size conductors according to lighting control device manufacturer's written instructions, unless otherwise indicated.

D. Splices, Taps, and Terminations: Make connections only on numbered terminal strips in junction, pull, and outlet boxes; terminal cabinets; and equipment enclosures.

E. All conductors shall be installed in an enclosed by a metal raceway.

3.04 IDENTIFICATION

A. Identify components and power and control wiring according to Division 26 Section "Identification for Electrical Systems."

1. Identify controlled circuits in lighting contactors.

2. Identify circuits or luminaries controlled by photoelectric and occupancy sensors at each sensor.

B. Label time switches and contactors with a unique designation.

3.05 FIELD QUALITY CONTROL

A. Perform the following field tests and inspections and prepare test reports:

1. After installing time switches and sensors, and after electrical circuitry has been energized, adjust and test for compliance with requirements.

2. Operational Test: Verify operation of each lighting control device and adjust time delays.

B. Lighting control devices that fail tests and inspections are defective work.

3.06 ADJUSTING

A. Occupancy Adjustments: When requested within 12 months of date of Substantial Completion, provide on-site assistance in adjusting sensors to suit occupied conditions. Provide up to two visits to Project during other-than-normal occupancy hours for this purpose.

3.07 DEMONSTRATION

A. Coordinate demonstration of products specified in this Section with demonstration requirements for low-voltage, programmable lighting control system specified in Division 26 Section "Network Lighting Controls."

B. Engage a factory-authorized service representative to train Owner's maintenance personnel to adjust, operate, and maintain lighting control devices. Refer to Division 01 Section "Demonstration and Training."

END OF SECTION 26 09 23

26 11 00

FIRE STOPPING

PART 1 - GENERAL

1.01 RELATED DOCUMENTS

A. Requirements of Division 26 "COMMON WORK RESULTS FOR ELECTRICAL" apply to this Section.

1.02 SECTION INCLUDES

A. Fireproof fire stopping materials.

1.03 SUBMITTALS: SUBMIT THE FOLLOWING IN ACCORDANCE WITH SECTION 260500.

A. Fireproof fire stopping materials.

B. Provide U.L. category and file numbers of products.

1.04 QUALITY ASSURANCE: COMPLY WITH THE FOLLOWING.

A. ASTM E814 (UL 1479) - Test Method of Fire Tests of Through-Penetration Fire stops.

B. NEC 300-21 and NEC 800-52(b).

C. Conform to applicable code for fire resistance ratings and surface burning characteristics.

D. Provide certificate of compliance from authority having jurisdiction indicating approval of combustibility.

1.05 SEQUENCING

A. Sequence work to permit fire stopping materials to be installed after adjacent and surrounding work is complete.

PART 2 - PRODUCTS

2.01 MANUFACTURERS

A. Flame-Safe FS500, FST600, FS900, FST900, or FSP1000.

B. Dow Corning 306548 Silicone RTV Foam.

C. 3M Fire Barrier Penetration Sealing Systems.

D. PENSIL 851, General Electric Company.

2.02 PERFORMANCE REQUIREMENTS

A. The requirements of this section shall be provided in addition to the requirements of Division 7.

B. Maintain required classification, fire, acoustic, and vapor barrier ratings for electrical installations penetrating walls, ceilings, and floors per ASTM E814 (UL 1479), NEC 300-21 and NEC 800-52(b).

1. Penetrations of classified area walls, ceiling and floors shall be sealed with the same material to maintain the integrity of area classification.

2. Penetrations of fire-rated walls, ceilings, and floors shall be sealed with a UL listed Through-Penetrations Fire-Stop System.

3. Penetrations of non-fire-rated walls, ceilings, and floors shall be filled and finished using the same finish material as the wall, ceiling, or floor.

4. Outlet box and lighting fixture installation in fire-rated walls, ceilings, and floors shall be in accordance with the UL Fire Resistance Directory.

C. Fire safety system shall not require de-rating the ampacity of electrical conductors.

D. Where mastic is used to seal the surface of the fire stop, the mastic shall be non-hardening.

E. Fire safety material shall not contract to allow transmission of smoke or water prior to exposure of a fire condition.

PART 3 - EXECUTION

3.01 EXAMINATION

A. Verify that openings are ready to receive the work of this section.

3.02 PREPARATION

A. Clean substrate surfaces of dirt, dust, grease, oil, loose material, or other matter which may affect bond of fire stopping material.

B. Remove incompatible materials which affect bond.

3.03 APPLICATION

A. Apply primer and materials in accordance with manufacturer's instructions.

B. Apply fire stopping material in sufficient thickness to achieve rating to uniform density and texture.

C. Install material at walls or partition openings which contain penetrating sleeves, piping, ductwork, conduit, and other items requiring fire stopping.

D. Sleeves shall be of suitable length to accommodate fire stopping system used. Where conduit passes through a sleeve, the clearance around the conduit shall not be less than 1/2".

3.04 CLEANING

A. Clean adjacent surfaces of fire stopping materials.

3.05 PROTECTION OF FINISHED WORK

A. Protect adjacent surfaces from damage by material installation.

END OF SECTION 26 11 00

this page was left blank intentionally

26 22 00

LOW-VOLTAGE TRANSFORMERS

PART 1 - GENERAL

1.01 RELATED DOCUMENTS

A. Drawings and general provisions of the Contract, including General and Supplementary Conditions and Division 01 Specification Sections, apply to this Section.

1.02 SUMMARY

A. This Section includes the following types of dry-type transformers rated 600 V and less, with capacities up to 1000 kVA:

1. Harmonics Mitigating (Canceling) Transformers as indicated on Drawings:

a. Delta-to-ZigZag 0-degree phase shift secondary.

b. Wye-to-ZigZag 30-degree phase shift secondary.

1.03 SUBMITTALS

A. Product Data: Include rated nameplate data, capacities, weights, dimensions, minimum clearances, installed devices and features, and performance for each type and size of transformer indicated.

B. Coordination Drawings: Provide coordination drawings as described in 26 05 00 paragraph 1.03(C).

C. Shop Drawings: Detail equipment assemblies and indicate dimensions, weights, loads, required clearances, method of field assembly, components, and location and size of each field connection.

D. Qualification Data: For testing agency.

E. Source quality-control test reports.

F. Field quality-control test reports.

G. Operation and Maintenance Data.

1.04 QUALITY ASSURANCE

A. Source Limitations: Obtain each transformer type through one source from a single manufacturer.

B. Electrical Components, Devices, and Accessories: Listed and labeled as defined in NFPA 70, Article 100, by a testing agency acceptable to authorities having jurisdiction, and marked for intended use.

C. Comply with IEEE C57.12.91, "Test Code for Dry-Type Distribution and Power Transformers."

D. Harmonics Canceling Transformers: NEMA ST-1, TP-1, TP-2 and IEEE-519-1992 compliance.

E. Comply with United States Department of Energy (DOE), United States Code (USC) and Code of Federal Regulations (CFR)

1. 42 USC - Energy Conservation Program for Consumer Products Other Than Automobiles

2. 10 CFR 431 – Energy Efficiency Program for Certain Commercial and Industrial Equipment, Subpart K – Distribution Transformers

3. Appendix A to Subpart K of 10 CFR part 431 - Uniform Test Method for Measuring the Energy Consumption of Distribution Transformers

1.05 DELIVERY, STORAGE, AND HANDLING

A. Temporary Heating: Apply temporary heat according to manufacturer's written instructions within the enclosure of each ventilated-type unit, throughout periods during which equipment is not energized and when transformer is not in a space that is continuously under normal control of temperature and humidity.

1.06 COORDINATION

A. Coordinate size and location of concrete bases with actual transformer provided. Cast anchor-bolt inserts into bases. Concrete, reinforcement, and formwork requirements are specified in Division 03.

B. Coordinate installation of wall-mounting and structure-hanging supports with actual transformer provided.

PART 2 - PRODUCTS

2.01 MANUFACTURERS

A. General Purpose Dry-Type: Subject to compliance with requirements, provide products by one of the following:

1. Square D / Schneider Electric

2. Siemens

1. Eaton / Cutler Hammer

B. General Purpose Dry-Type: Subject to compliance with requirements, provide products by one of the following:

1. Powersmiths T1000-30H

2. Power Quality International

3. Mirus

4.

2.02 GENERAL TRANSFORMER REQUIREMENTS

A. Description: Factory-assembled and -tested, air-cooled units for 60-Hz service.

B. Cores: Grain-oriented, non-aging silicon steel.

C. Coils: Continuous windings without splices except for taps.

1. Internal Coil Connections: Brazed or pressure type.

2. Coil Material: Copper, unless indicated otherwise in Drawings.

3. Core and coil designs shall be low loss type with minimum efficiencies per NEMA TP1 and 10 CFR §431.196(a)(2) (DOE 2016 requirements) when operated at 35% of full load capacity. Efficiency shall be tested in accordance with NEMA TP2 and 10 CFR §431.193.

D. Enclosures: NEMA 2 or 3R rating as required, unless otherwise indicated on Drawings.

1. Provide hinged doors with infrared scanning window.

2. Provide surge protection device (SPD).

3. Provide compression lug kit for all terminations.

E. Efficiencies:

Single phase		Three Phase	
kVA	Efficiency	kVA	Efficiency
15	97.7%	15	97.89%
25	98.0%	30	98.23%
37.5	98.2%	45	98.40%
50	98.3%	75	98.60%
75	98.5%	112.5	98.74%
100	98.6%	150	98.83%
167	98.7%	225	98.94%
250	98.8%	300	99.02%
333	98.9%	500	99.14%
		750	99.23%
		1000	99.28%

2.03 HARMONIC MITIGATING TRANSFORMERS

A. Single Output (Secondary):

1. DZ0 – Delta Primary, Zig-Zag Secondary, 0° phase shift.

2. YZ30 – Wye Primary (ungrounded neutral), Zig-Zag Secondary, 30° phase shift.

B. Insulation and Varnish systems: 220 deg. C. Class R, Epoxy polyester impregnation, 130°C Temperature Rise in 40°C Ambient.

C. All terminals. Including those for changing taps, must be readily accessible. Windings shall be continuous with terminations brazed or welded. 10KV BIL.

D. Compatible with all types of linear and non-linear current and future loads.

E. Impedance: Between 3.0% and 5.0% at rated KVA.

F. Zero sequence Impedance/reactance less than 0.95% and 0.3% respectively.

G. Zero sequence currents not coupled into primary windings.

H. Voltage Taps: Two (2) 2.5% above and four (4) 2.5% below nominal primary voltage.

I. Provide dual electrostatic shield.

2.04 DISTRIBUTION TRANSFORMERS

A. Comply with NEMA ST 20, and list and label as complying with UL 1561.

B. Cores: One (1) leg per phase.

C. Enclosure: Ventilated, NEMA 250, Type 2.

1. Core and coil shall be encapsulated within resin compound, sealing out moisture and air.

D. Taps for Transformers Smaller than 3 kVA: None.

E. Taps for Transformers 7.5 to 10 kVA: Two (2) 5 percent taps below rated voltage.

F. Taps for Transformers 15 kVA and Larger: Two (2) 2.5 percent taps above and four (4) 2.5 percent taps below normal full capacity.

G. Insulation Class: Class R (220 deg C), UL-component-recognized insulation system with a maximum of 115 deg C rise above 40 deg C ambient temperature.

H. Energy Efficiency for Transformers Rated 15 kVA and Larger:

1. Complying with NEMA TP 1, Class 1 efficiency levels.

2. Tested according to NEMA TP 2.

I. K-Factor Rating: Transformers indicated to be K-factor rated shall comply with UL 1561 requirements for non-sinusoidal load current-handling capability to the degree defined by designated K-factor.

1. Unit shall not overheat when carrying full-load current with harmonic distortion corresponding to designated K-factor.

2. Indicate value of K-factor on transformer nameplate.

J. Wall Brackets: Manufacturer's standard brackets.

K. Fungus Proofing: Permanent fungicidal treatment for coil and core.

L. Low-Sound-Level Requirements: Minimum of 3 dBA less than NEMA ST 20 standard sound levels when factory tested according to IEEE C57.12.91.

M. Low-Sound-Level Requirements: Maximum sound levels, when factory tested, shall be in according to IEEE C57.12.91.

2.05 IDENTIFICATION DEVICES

A. Nameplates: Engraved, laminated-plastic or metal nameplate for each transformer, mounted with corrosion-resistant screws. Nameplates and label products are specified in Division 26 Section "Identification for Electrical Systems."

2.06 SOURCE QUALITY CONTROL

A. Test and inspect transformers according to IEEE C57.12.91.

B. Factory Sound-Level Tests: Conduct sound-level tests on equipment for this Project.

C. Testing will also include recording of the voltages on the primary and secondary including the Impedance used.

PART 3 - EXECUTION

3.01 EXAMINATION

A. Examine conditions for compliance with enclosure- and ambient-temperature requirements for each transformer.

B. Verify that field measurements are as needed to maintain working clearances required by NFPA 70 and manufacturer's written instructions. Working Clearance shall not be less than 4 feet in front of the front cover. Inform engineer if there is a potential clearance problem prior to rough-in.

C. Examine walls, floors, roofs, and concrete bases for suitable mounting conditions where transformers will be installed.

D. Verify that ground connections are in place and requirements in Division 26 Section "Grounding and Bonding for Electrical Systems" have been met. Maximum ground resistance shall be 5 ohms at location of transformer. Install a ground copper bar for all grounding connections. Single lug grounding is not permissible.

E. Proceed with installation only after unsatisfactory conditions have been corrected.

F. Grounding electrode conductor will be installed in conduit and connected with Blackburn clamps. A connection will be made to building steel and a new driven copper ground rod.

3.02 INSTALLATION

A. Install wall-mounting transformers level and plumb with wall brackets fabricated by transformer manufacturer. If ceiling mounting is utilized, a letter shall be obtained and approved by a structural engineer.

1. Brace wall-mounting transformers as specified in Division 26 Section "Vibration and Seismic Controls for Electrical Systems.

B. Construct concrete bases and anchor floor-mounting transformers according to manufacturer's written instructions.

C. Install ALL floor mounted transformers as indicated on 6” housekeeping pads 4” inches larger than transformer, complying with manufacturer's written instructions, applicable requirements of NEC, NESC, NEMA, ANSI and IEEE standards, and in accordance with recognized industry practices to ensure that products fulfill requirements. Provide NEC working clearance in front of transformers assuming they will require examination while energized.

D. Coordinate transformer installation work with electrical raceway and wire/cable work, as necessary for proper interface.

E. Install floor mounted units with bolts to equipment pad with neoprene/cork vibration mounts between transformer and pad. Comply with manufacturer's indicated installation method, if any.

F. Connect transformer units to electrical wiring system with flexible metal conduit or liquid tight flexible metal conduit. Comply with the requirements of other Division 16 sections.

G. Tighten electrical connectors and terminals, including screws and bolts, in accordance with equipment manufacturer's published torque tightening values for equipment connectors. Where manufacturer's torque requirements are not indicated, tighten connectors and terminals to comply with tightening torques specified in UL STD 486A. Record torques on all terminations.

H. Back off shipping bolts on internal vibration isolators.

I. Provide complementary 0° and 30° phase-shift in as equal capacities for each bus as possible to maximize harmonic mitigation.

3.03 CONNECTIONS

A. Ground equipment according to Division 26 Section "Grounding and Bonding for Electrical Systems." Install a ground copper bar to where all connections are made. Do not use single lugs. The GEC conductor shall be installed directly to XO terminal. Use grounding bushing.

B. Connect wiring according to Division 26 Section "Low-Voltage Electrical Power Conductors and Cables." Carefully remove the wire insulation without damaging the copper wire strands and check all connections are to be tight.

3.04 FIELD QUALITY CONTROL

A. Manufacturer's Field Service: Engage a factory-authorized service representative to inspect, test, and adjust components, assemblies, and equipment installations, including connections. Report results in writing.

B. Perform tests and inspections and prepare test reports.

1. Manufacturer's Field Service: Engage a factory-authorized service representative to inspect components, assemblies, and equipment installations, including connections, and to assist in testing.

C. Tests and Inspections:

1. Perform each visual and mechanical inspection and electrical test stated in NETA Acceptance Testing Specification. Certify compliance with test parameters.

D. Remove and replace units that do not pass tests or inspections and retest as specified above.

E. Infrared (Baseline) Scanning: Two months after Substantial Completion, perform an infrared scan of transformer connections.

1. Use an infrared-scanning device designed to measure temperature or detect significant deviations from normal values. Provide documentation of device calibration.

1. Perform 2 follow-up infrared scans of transformers, one at 4 months and the other at 11 months after Substantial Completion.

2. Prepare a certified report identifying transformer checked and describing results of scanning. Include notation of deficiencies detected, remedial action taken, and scanning observations after remedial action.

F. Test Labeling: On completion of satisfactory testing of each unit, attach a dated and signed "Satisfactory Test" label to tested component.

G. Provide equipment grounding connections for power/distribution transformers, sizes per NEC. Tighten connections to comply with tightening torques specified in UL STD 486A to assure permanent and effective grounding.

H. Transformer Testing

1. Certified Test Reports in accordance with TP-1-2002 and TP-2.

1. Open Circuit transformer tests, for calculating percent zero-sequence impedances and reactance as follows:

   a. With the transformer's primary terminals open-circuited, make a low impedance connection between secondary Terminals X1, X2 and X3.

   b. Connect a variable 60HZ power source between Secondary Terminals X1, X2, X3 and X0, which includes precision revenue class voltage and current measurement instrumentation.

   c. Increase 60HZ voltage across Terminals X1, X2, X3 and Terminal X0 until >2/3 full-scale readings are obtained on the voltage and current meters. In no case can the current reading exceed the full load rating of the winding under test. The values may be lower since impedance and reactance are linear.

   d. Calculate impedance in Ohms based on the measured voltage and current values.

   e. Based on the measured voltage, as a percentage of the rated voltage of the windings, calculate percent zero-sequence impedance and reactance.

2. Closed Circuit Transformer Tests, for calculating transformer core and copper losses as follows:

   a. In accordance with e-Rated Transformer Corporation Standard Publications VAD1-2003 and VAD2- 2003.

   b. Measure Primary and Secondary voltage and current differences simultaneously, using ‘revenue class’ instrumentation and calculate excitation or no-load losses and impedances/load losses.

   c. Submit such reports as part of shop drawings submittals for each size typical transformers, based on tests done within a year or less time.

   d. Submit such reports for all the transformers for the project, prior to shipment.

3. Design, manufacturing and testing of these transformers, in compliance with most current NEMA, IEEE and Industry standards and practices.

4. Transformer Loss Calculations based on primary and secondary voltage and current differences measured simultaneously.

3.05 PROTECTION

A. Physically protect transformers against damage. All field-repairs to be performed by and approved by factory-authorized service representative at no added cost to Owner:

   1. Touch-up scratches and removed paint with original factory paint.

   2. Replace dented plates and panels.

3. Replace scratched, discolored, or otherwise damaged nameplate labels.

3.06 ADJUSTING

A. Record transformer secondary voltage at each unit for at least 48 hours of typical occupancy period. Adjust transformer taps to provide optimum voltage conditions at secondary terminals. Optimum is defined as not exceeding nameplate voltage plus 10 percent and not being lower than nameplate voltage minus 3 percent at maximum load conditions. Submit recording and tap settings as test results. All test reports on transformers shall be compile to one database and this must be submitted to the Owner.

B. Connect buck-boost transformers to provide nameplate voltage of equipment being served, plus or minus 5 percent, at secondary terminals.

C. Output Settings Report: Prepare a written report recording output voltage and tap settings.

3.07 CLEANING

A. Vacuum dirt and debris; do not use compressed air to assist in cleaning.

END OF SECTION 26 22 00

26 24 16

PANELBOARDS

PART 1 - GENERAL

1.01 RELATED DOCUMENTS

A. Drawings and general provisions of the Contract, including General and Supplementary Conditions and Division 01 Specification Sections, apply to this Section.

1.02 SUMMARY

A. Section Includes:

1. Distribution panelboards.

2. Lighting and appliance branch-circuit panelboards.

1.03 DEFINITIONS

A. SVR: Suppressed voltage rating.

B. SPD: Surge protective device (suppressor).

1.04 SUBMITTALS

A. Product Data: For each type of panelboard, switching and over-current protective device, surge suppression Protective device (SPD), accessory, and component indicated. Include dimensions and manufacturers' technical data on features, performance, electrical characteristics, ratings, and finishes.

B. Coordination Drawings: Provide coordination drawings as described in 26 05 00 paragraph 1.03(C).

C. Shop Drawings: For each panelboard and related equipment.

1. Include dimensioned plans, elevations, sections, and details. Show tabulations of installed devices, equipment features, and ratings.

2. Detail enclosure types and details for types other than NEMA 250, Type 1.

3. Detail bus configuration, current, and voltage ratings.

4. Short-circuit current rating of panelboards and over-current protective devices.

5. Include evidence of NRTL listing for series rating of installed devices.

6. Detail features, characteristics, ratings, and factory settings of individual over-current protective devices and auxiliary components.

7. Include wiring diagrams for power, signal, and control wiring.

8. Include time-current coordination curves for each type and rating of over-current protective device included in panelboards. Submit on translucent log-log graft paper; include selectable ranges for each type of over-current protective device.

9. Fault current rating, brazing and bus rating

D. Qualification Data: For qualified testing agency.

E. Field Quality-Control Reports:

1. Test procedures used.

2. Test results that comply with requirements.

3. Results of failed tests and corrective action taken to achieve test results that comply with requirements.

F. Panelboard Schedules: For installation in panelboards.

G. Operation and Maintenance Data: For panelboards and components to include in emergency, operation, and maintenance manuals. In addition to items specified in Division 01 Section "Operation and Maintenance Data," include the following:

1. Manufacturer's written instructions for testing and adjusting over-current protective devices.

2. Time-current curves, including selectable ranges for each type of over-current protective device that allows adjustments.

1.05 QUALITY ASSURANCE

A. Source Limitations: Obtain panelboards, over-current protective devices, components, and accessories from single source from single manufacturer.

B. Product Selection for Restricted Space: Drawings indicate maximum dimensions for panelboards including clearances between panelboards and adjacent surfaces and other items. Comply with indicated maximum dimensions.

C. Electrical Components, Devices, and Accessories: Listed and labeled as defined in NFPA 70, by a qualified testing agency, and marked for intended location and application.

D. Comply with NEMA PB 1.

E. Comply with NFPA 70.

1.06 DELIVERY, STORAGE, AND HANDLING

A. Remove loose packing and flammable materials from inside panelboards; install temporary electric heating (250 W per panelboard) to prevent condensation.

B. Handle and prepare panelboards for installation according to NEMA PB 1.

1.07 PROJECT CONDITIONS

A. Environmental Limitations:

1. Do not deliver or install panelboards until spaces are enclosed and weathertight, wet work in spaces is complete and dry, work above panelboards is complete, and temporary HVAC system is operating and maintaining ambient temperature and humidity conditions at occupancy levels during the remainder of the construction period.

B. Service Conditions: NEMA PB 1, usual service conditions, as follows:

1. Ambient temperatures within limits specified.

2. Altitude not exceeding 6600 feet.

C. Interruption of Existing Electric Service: Do not interrupt electric service to facilities occupied by Owner or others unless permitted under the following conditions and then only after arranging to provide temporary electric service according to requirements indicated:

1. Notify Owner no fewer than two weeks days in advance of proposed interruption of electric service.

2. Comply with NFPA 70E.

1.08 COORDINATION

A. Coordinate layout and installation of panelboards and components with other construction that penetrates walls or is supported by them, including electrical and other types of equipment, raceways, piping, encumbrances to workspace clearance requirements, and adjacent surfaces. Maintain required workspace clearances and required clearances for equipment access doors and panels.

B. Coordinate sizes and locations of concrete bases with actual equipment provided. Cast anchor-bolt inserts into bases. Concrete, reinforcement, and formwork requirements are specified in Division 03.

1.09 WARRANTY

A. Special Warranty: Manufacturer's standard form in which manufacturer agrees to repair or replace transient voltage suppression devices that fail in materials or workmanship within specified warranty period.

1. Warranty Period: Five years from date of Substantial Completion.

1.10 EXTRA MATERIALS

A. Furnish extra materials that match products installed and that are packaged with protective covering for storage and identified with labels describing contents.

1. Keys: Two spares for each type of panelboard cabinet lock. All keys shall be turn-in to Owner.

2. Circuit Breakers Including GFCI and Ground Fault Equipment Protection (GFEP) Types: Two spares for each panelboard.

3. Fuses for Fused Switches: Equal to 10 percent of quantity installed for each size and type, but no fewer than three of each size and type.

4. Fuses for Fused Power-Circuit Devices: Equal to 10 percent of quantity installed for each size and type, but no fewer than three of each size and type.

PART 2 - PRODUCTS

2.01 GENERAL REQUIREMENTS FOR PANELBOARDS

A. Fabricate and test panelboards according to IEEE 344 to withstand seismic forces defined in Division 26 Section "Vibration and Seismic Controls for Electrical Systems."

B. Enclosures: Flush- and surface-mounted cabinets, as indicated on Drawings:

1. Rated for environmental conditions at installed location.

    a. Indoor Dry and Clean Locations: NEMA 250, Type 1.

    b. Outdoor Locations: NEMA 250, Type 3R.

    c. Wash-Down Areas: NEMA 250, Type 4X stainless steel.

    d. Other Wet or Damp Indoor Locations: NEMA 250, Type 4.

    e. Indoor Locations Subject to Dust, Falling Dirt, and Dripping Non-corrosive Liquids: NEMA 250, Type 5.

2. Front: Secured to box with concealed trim clamps. For surface-mounted fronts, match box dimensions; for flush-mounted fronts, overlap box.

3. Hinged Front Cover: Entire front trim hinged to box and with standard door within hinged trim cover.

4. Door in door Hinges: For ease of access to branch circuit wiring.

5. Skirt for Surface-Mounted Panelboards: Same gage and finish as panelboard front with flanges for attachment to panelboard, wall, and ceiling or floor.

6. Gutter Extension and Barrier: Same gage and finish as panelboard enclosure; integral with enclosure body. Arrange to isolate individual panel sections.

7. Finishes:

8. Panels and Trim: Steel and galvanized steel, factory finished immediately after cleaning and pre-treating with manufacturer's standard two-coat, baked-on finish consisting of prime coat and thermosetting topcoat.

    a. Back Boxes: Same finish as panels and trim.

9. Directory Card: Inside panelboard door, mounted in metal frame with transparent protective cover.

C. Incoming Mains Location: Top and bottom.

D. Phase, Neutral, and Ground Buses:

1. Material: Hard-drawn Copper, 98 percent conductivity.

2. Coating: Electroplated with Tin to a minimum thickness of 30 micron.

3. Equipment Ground Bus: Adequate for feeder and branch-circuit equipment grounding conductors; bonded to box.

4. Isolated Ground Bus: Adequate for branch-circuit isolated ground conductors; insulated from box.

5. Extra-Capacity Neutral Bus: Neutral bus rated 200 percent of phase bus and UL listed as suitable for nonlinear loads.

6. Split Bus: Vertical buses divided into individual vertical sections.

E. Conductor Connectors: Suitable for use with conductor material and sizes.

1. Material: Hard-drawn copper, 98 percent conductivity.

2. Main and Neutral Lugs: Mechanical type.

3. Ground Lugs and Bus-Configured Terminators: Mechanical type.

4. Feed-Through Lugs: Mechanical type, suitable for use with conductor material. Locate at opposite end of bus from incoming lugs or main device.

5. Sub-feed (Double) Lugs: Mechanical type suitable for use with conductor material. Locate at same end of bus as incoming lugs or main device.

6. Gutter-Tap Lugs: Mechanical type suitable for use with conductor material. Locate at same end of bus as incoming lugs or main device.

7. Extra-Capacity Neutral Lugs: Rated 200 percent of phase lugs mounted on extra-capacity neutral bus.

F. Service Equipment Label: NRTL labeled for use as service equipment for panelboards or load centers with one or more main service disconnecting and over-current protective devices.

G. Future Devices: Mounting brackets, bus connections, filler plates, and necessary appurtenances required for future installation of devices.

H. Panelboard Short-Circuit Current Rating: Fully rated to interrupt symmetrical short-circuit current available at terminals. Series-connected ratings are not acceptable.

2.02 DISTRIBUTION PANELBOARDS

A. Manufacturers: Subject to compliance with requirements, provide products by one of the following:

1. Square D / Schneider Electric

2. Cutler-Hammer / Eaton

3. General Electric / ABB

4. Siemens

B. Panelboards: NEMA PB 1, power and feeder distribution type.

C. Doors: Secured with vault-type latch with tumbler lock; keyed alike.

1. For doors more than 36 inches high, provide two latches, keyed alike.

D. Mains: Circuit breaker.

E. Branch Overcurrent Protective Devices for Circuit-Breaker Frame Sizes 125 A and Smaller: Bolt-on circuit breakers.

F. Branch Over-current Protective Devices for Circuit-Breaker Frame Sizes Larger than 125 A: Bolt-on circuit breakers; plug-in circuit breakers where individual positive-locking device requires mechanical release for removal.

G. Branch Over-current Protective Devices: Circuit Breaker.

H. Contactors in Main Bus: NEMA ICS 2, Class A, mechanically held, general-purpose controller, with same short-circuit interrupting rating as panelboard.

1. Internal Control-Power Source: Control-power transformer, with fused primary and secondary terminals, connected to main bus ahead of contactor connection.

2.03 LIGHTING AND APPLIANCE BRANCH-CIRCUIT PANELBOARDS

A. Manufacturers: Subject to compliance with requirements, provide products by one of the following:

1. Square D / Schneider Electric

2. Cutler-Hammer / Eaton

3. General Electric / ABB

4. Siemens

B. Panelboards: NEMA PB 1, lighting and appliance branch-circuit type.

C. Mains: Circuit breaker.

D. Branch Over-current Protective Devices: Bolt-on circuit breakers, replaceable without disturbing adjacent units.

E. Contactors in Main Bus: NEMA ICS 2, Class A, mechanically held, general-purpose controller, with same short-circuit interrupting rating as panelboard.

1. Internal Control-Power Source: Control-power transformer, with fused primary and secondary terminals, connected to main bus ahead of contactor connection.

F. Doors: Concealed hinges; secured with flush latch with tumbler lock; keyed alike.

G. Column-Type Panelboards: Narrow gutter extension, with cover, to overhead junction box equipped with ground and neutral terminal buses.

H. Panelboard Short-Circuit Current Rating: Fully rated to interrupt symmetrical short-circuit current available at terminals. Series-connected ratings are not acceptable.

2.04 ACCESSORY COMPONENTS AND FEATURES

A. Accessory Set: Include tools and miscellaneous items required for over-current protective device test, inspection, maintenance, and operation.

B. Portable Test Set: For testing functions of solid-state trip devices without removing from panelboard. Include relay and meter test plugs suitable for testing panelboard meters and switchboard class relays.

PART 3 - EXECUTION

3.01 EXAMINATION

A. Receive, inspect, handle, and store panelboards according to NEMA PB 1.1.

B. Examine panelboards before installation. Reject panelboards that are damaged or rusted or have been subjected to water saturation.

C. Examine elements and surfaces to receive panelboards for compliance with installation tolerances and other conditions affecting performance of the Work.

D. Proceed with installation only after unsatisfactory conditions have been corrected.

3.02 INSTALLATION

A. Install panelboards and accessories according to NEMA PB 1.1.

B. Equipment Mounting: Install panelboards on concrete bases, 4-inch nominal thickness.

1. Install dowel rods to connect concrete base to concrete floor. Unless otherwise indicated, install dowel rods on 18-inch centers around full perimeter of base.

2. For panelboards, install epoxy-coated anchor bolts that extend through concrete base and anchor into structural concrete floor.

3. Place and secure anchorage devices. Use setting drawings, templates, diagrams, instructions, and directions furnished with items to be embedded.

4. Install anchor bolts to elevations required for proper attachment to panelboards.

5. Attach panelboard to the vertical finished or structural surface behind the panelboard.

C. Temporary Lifting Provisions: Remove temporary lifting eyes, channels, and brackets and temporary blocking of moving parts from panelboards.

D. Comply with mounting and anchoring requirements specified in Division 26 Section "Vibration and Seismic Controls for Electrical Systems."

E. Mount top of trim 90 inches above finished floor unless otherwise indicated.

F. Mount panelboard cabinet plumb and rigid without distortion of box. Mount recessed panelboards with fronts uniformly flush with wall finish and mating with back box. Mount surface panelboards on 1-5/8 x 1-5/8 Unistrut not on wall surface.

G. Install over-current protective devices and controllers not already factory installed.

1. Set field-adjustable, circuit-breaker trip ranges.

H. Install filler plates in unused spaces.

I. Stub four 1-inch empty conduits from panelboard into accessible ceiling space or space designated to be ceiling space in the future. Stub four 1-inch empty conduits into raised floor space or below slab not on grade. All empty conduits shall be enclosed or sealed.

J. All conduits, junction boxes, pull boxes and entering and leaving shall be marked or label with circuit numbers.

K. Conductors inside the panelboards shall be install neat, order and workmanlike manner. Comply and refer to NEC Article 312.

L. Comply with NECA 1.

3.03 IDENTIFICATION

A. Identify field-installed conductors, interconnecting wiring, and components; provide warning signs complying with Division 26 Section "Identification for Electrical Systems."

B. Create a directory to indicate installed circuit loads after balancing panelboard loads; incorporate Owner's final room designations. Obtain approval before installing. Use a computer or typewriter to create directory; handwritten directories are not acceptable.

C. Panelboard Nameplates: Label each panelboard with a nameplate complying with requirements for identification specified in Division 26 Section "Identification for Electrical Systems."

D. Device Nameplates: Label each branch circuit device in distribution panelboards with a nameplate complying with requirements for identification specified in Division 26 Section "Identification for Electrical Systems."

3.04 FIELD QUALITY CONTROL

A. Manufacturer's Field Service: Engage a factory-authorized service representative to inspect, test, and adjust components, assemblies, and equipment installations, including connections.

B. Perform tests and inspections.

1. Manufacturer's Field Service: Engage a factory-authorized service representative to inspect components, assemblies, and equipment installations, including connections, and to assist in testing.

C. Acceptance Testing Preparation:

1. Test insulation resistance for each panelboard bus, component, connecting supply, feeder, and control circuit.

2. Test continuity of each circuit.

D. Tests and Inspections:

1. Perform each visual and mechanical inspection and electrical test stated in NETA Acceptance Testing Specification. Certify compliance with test parameters.

2. Correct malfunctioning units on-site, where possible, and retest to demonstrate compliance; otherwise, replace with new units and retest.

3. Perform the following infrared scan tests and inspections and prepare reports:

a. Initial Infrared Scanning: After Substantial Completion, but not more than 60 days after Final Acceptance, perform an infrared scan of each panelboard. Remove front panels so joints and connections are accessible to portable scanner.

b. Follow-up Infrared Scanning: Perform an additional follow-up infrared scan of each panelboard 11 months after date of Substantial Completion.

c. Instruments and Equipment:

1) Use an infrared scanning device designed to measure temperature or to detect significant deviations from normal values. Provide calibration record for device.

E. Panelboards will be considered defective if they do not pass tests and inspections.

F. Prepare test and inspection report, including a certified report that identifies panelboards included and that describes scanning results. Include notation of deficiencies detected, remedial action taken, and observations after remedial action.

3.05 ADJUSTING

A. Adjust moving parts and operable component to function smoothly, and lubricate as recommended by manufacturer.

B. Set field-adjustable circuit-breaker trip ranges as indicated.

C. Load Balancing: After Substantial Completion, but not more than 60 days after Final Acceptance, measure load balancing and make circuit changes.

1. Measure as directed during period of normal system loading.

2. Perform load-balancing circuit changes outside normal occupancy/working schedule of the facility and at time directed. Avoid disrupting critical 24-hour services such as fax machines and on-line data processing, computing, transmitting, and receiving equipment.

3. After circuit changes, recheck loads during normal load period. Record all load readings before and after changes and submit test records.

4. Tolerance: Difference exceeding 20 percent between phase loads, within a panelboard, is not acceptable. Rebalance and recheck as necessary to meet this minimum requirement.

3.06 PROTECTION

A. Temporary Heating: Apply temporary heat to maintain temperature according to manufacturer's written instructions.

B. Physically protect panelboards against damage. All field-repairs to be performed by and approved by factory-authorized service representative at no added cost to Owner:

1. Touch-up scratches and removed paint with original factory paint.

1. Replace dented plates and panels.

2. Repair or replace damaged or non-functional devices.

3. Replace scratched, discolored, or otherwise damaged nameplate or device identification labels.

3.1 CLEANING

A. Vacuum dirt and debris; do not use compressed air to assist in cleaning.

C. Clean the outside and inside the switchboards free from dust.

END OF SECTION 26 24 16

THIS PAGE WAS LEFT BLANK INTENTIONALLY

26 27 13

ELECTRICITY METERING

PART 1 - GENERAL

1.01 RELATED DOCUMENTS

A. Drawings and general provisions of the Contract, including General and Supplementary Conditions and Division 01 Specification Sections, apply to this Section.

1.02 SUMMARY

A. Section includes equipment for electricity metering by Owner.

1.03 DEFINITIONS

A. KY Pulse: Term used by the metering industry to describe a method of measuring consumption of electricity that is based on a relay opening and closing in response to the rotation of the disk in the meter.

B. PC: Personal computer.

1.04 SUBMITTALS

A. Product Data: For each type of product indicated.

B. Shop Drawings: For electricity-metering equipment.

1. Dimensioned plans and sections or elevation layouts.

2. Wiring Diagrams: For power, signal, and control wiring. Identify terminals and wiring designations and color-codes to facilitate installation, operation, and maintenance. Indicate recommended types, wire sizes, and circuiting arrangements for field-installed wiring, and show circuit protection features.

C. Field quality-control reports.

D. Operation and Maintenance Data. In addition to items specified in Division 01 Section "Operation and Maintenance Data," include the following:

1. Application and operating software documentation.

2. Software licenses.

3. Software service agreement.

4. Hard copies of manufacturer's operating specifications, design user's guides for software and hardware, and PDF files on CD-ROM of the hard-copy Submittal.

1.05 QUALITY ASSURANCE

A. Electrical Components, Devices, and Accessories: Listed and labeled as defined in NFPA 70, by a qualified testing agency, and marked for intended location and application.

1.06 DELIVERY, STORAGE, AND HANDLING

A. Receive, store, and handle modular meter center according to NECA 400.

1.07 PROJECT CONDITIONS

A. Interruption of Existing Electrical Service: Do not interrupt electrical service to facilities occupied by Owner or others unless permitted under the following conditions and then only after arranging to provide temporary electrical service according to requirements indicated:

1. Notify Owner no fewer than two weeks in advance of proposed interruption of electrical service.

2. Do not proceed with interruption of electrical service without Owner's written permission.

1.08 COORDINATION

A. Electrical Service Connections: Coordinate with utility companies and components they furnish as follows:

1. Comply with requirements of utilities providing electrical power services.

2. Coordinate installation and connection of utilities and services, including provision for electricity-metering components.

1.09 SOFTWARE SERVICE AGREEMENT

A. Technical Support: Beginning with Substantial Completion, provide software support for two years.

B. Upgrade Service: Update software to latest version at Project completion. Install and program software upgrades that become available within two years from date of Substantial Completion. Upgrading software shall include operating system. Upgrade shall include new or revised licenses for use of software.

1. Provide 30 days' notice to Owner to allow scheduling and access to system and to allow Owner to upgrade his computer equipment if necessary.

PART 2 - PRODUCTS

2.01 EQUIPMENT FOR ELECTRICITY METERING BY OWNER

A. Manufacturers: Subject to compliance with requirements, provide products by one of the following:

1. Square D / Schneider Electric
2. E-Mon
3. National Meter Industries
4. General Electric / ABB
5. Eaton

B. General Requirements for Owner's Meters:

1. Comply with UL 1244.
2. Meters used for billing shall have an accuracy of 1.0 percent of reading, complying with requirements in ANSI C12.20.
3. Enclosure: NEMA 250, Type 1 minimum, with hasp for padlocking or sealing.
4. Identification: Comply with requirements in Division 26 Section "Identification for Electrical Systems."
5. Memory Backup: Self-contained to maintain memory throughout power outages of 72 hours, minimum.
6. Sensors: Current-sensing type, with current or voltage output, selected for optimum range and accuracy for meters indicated for this application.
   a. Type: Split and solid core.
7. Current-Transformer Cabinet: Listed or recommended by metering equipment manufacturer for use with sensors indicated.
8. Building Automation System (BAS) Interface: One digital KY pulse to a user-definable increment of energy measurement. Match signal to BAS input and arrange to convey the instantaneous, integrated, demand level measured by meter to provide data for processing and possible programmed demand control action by destination system.

C. Kilowatt-hour Meter: Electronic three-phase meters, measuring electricity used.

1. Voltage and Phase Configuration: Meter shall be designed for use on circuits with voltage rating and phase configuration indicated for its application.
2. Display: LCD with characters not less than 0.25-inch-high, indicating accumulative kilowatt-hours and current kilowatt load. Retain accumulated kilowatt-hour in a nonvolatile memory, until reset.
3. Display: Digital electromechanical counter, indicating accumulative kilowatt-hours.

D. Kilowatt-hour/Demand Meter: Electronic three-phase meters, measuring electricity use and demand. Demand shall be integrated over a 15-minute interval.

1. Voltage and Phase Configuration: Meter shall be designed for use on circuits with voltage rating and phase configuration indicated for its application.

2. Display: LCD with characters not less than 0.25-inch-high, indicating accumulative kilowatt-hours, current time and date, current demand, and historic peak demand, and time and date of historic peak demand. Retain accumulated kilowatt-hour and historic peak demand in a nonvolatile memory, until reset.

E. Data Transmission Cable: Transmit KY pulse data over Class 1 control-circuit conductors in raceway. Comply with Division 26 Section "Control-Voltage Electrical Power Cables."

F. Software: PC-based, a product of meter manufacturer, suitable for calculation of utility cost allocation and billing.

PART 3 - EXECUTION

3.01 INSTALLATION

A. Comply with equipment installation requirements in NECA 1.

B. Install meters furnished by utility company. Install raceways and equipment according to utility company's written requirements. Provide empty conduits for metering leads and extend grounding connections as required by utility company.

C. Install modular meter center according to NECA 400 switchboard installation requirements.

3.02 IDENTIFICATION

A. Comply with requirements for identification specified in Division 26 Section "Identification for Electrical Systems."

1. Series Combination Warning Label: Self-adhesive type, with text as required by NFPA 70.

2. Equipment Identification Labels: Adhesive film labels with clear protective overlay. For residential meters, provide an additional card holder suitable for typewritten card with occupant's name.

3.03 FIELD QUALITY CONTROL

A. Perform tests and inspections.

1. Manufacturer's Field Service: Engage a factory-authorized service representative to inspect components, assemblies, and equipment installations, including connections, and to assist in testing.

B. Tests and Inspections:

1. Connect a load of known kilowatt rating, 15 kW minimum, to a circuit supplied by metered feeder.

2. Turn off circuits supplied by metered feeder and secure them in off condition.

3. Run test load continuously for eight hours minimum, or longer, to obtain a measurable meter indication. Use test-load placement and setting that ensures continuous, safe operation.

4. Check and record meter reading at end of test period and compare with actual electricity used, based on test-load rating, duration of test, and sample measurements of supply voltage at test-load connection. Record test results.

C. Electricity metering will be considered defective if it does not pass tests and inspections.

D. Prepare test and inspection reports.

END OF SECTION 26 27 13

26 27 26

WIRING DEVICES

PART 1 - GENERAL

1.01 RELATED DOCUMENTS

A. Drawings and general provisions of the Contract, including General and Supplementary Conditions and Division 01 Specification Sections, apply to this Section.

1.02 SUMMARY

A. This Section includes the following:

1. Receptacles, receptacles with integral GFCI, and associated device plates.
2. Twist-locking receptacles.
3. Receptacles with integral surge suppression units.
4. Hospital Grade
5. Wall-box motion sensors.
6. Isolated-ground receptacles.
7. Snap switches and wall-box dimmers.
8. Wall-switch and exterior occupancy sensors.
9. Communications outlets.
10. Pendant cord-connector devices.
11. Cord and plug sets.
12. Floor service outlets, poke-through assemblies, service poles, and multi-outlet assemblies.

1.03 DEFINITIONS

A. EMI: Electromagnetic interference.

B. GFCI: Ground-fault circuit interrupter.

C. Pigtail: Short lead used to connect a device to a branch-circuit conductor.

D. RFI: Radio-frequency interference.

E. SPD: Surge suppressor protective device.

F. UTP: Unshielded twisted pair.

1.04 SUBMITTALS

A. Product Data: For each type of product indicated.

B. Shop Drawings: List of legends and description of materials and process used for pre-marking wall plates.

C. Samples: One for each type of device and wall plate specified, in each color specified.

D. Field quality-control test reports.

E. Operation and Maintenance Data: For wiring devices to include in all manufacturers' packing label warnings and instruction manuals that include labeling conditions.

1.05 QUALITY ASSURANCE

A. Source Limitations: Obtain each type of wiring device and associated wall plate through one source from a single manufacturer. Insofar as they are available, obtain all wiring devices and associated wall plates from a single manufacturer and one source.

B. Electrical Components, Devices, and Accessories: Listed and labeled as defined in NFPA 70, Article 100, by a testing agency acceptable to authorities having jurisdiction, and marked for intended use.

C. Comply with NFPA 70.

1.06 COORDINATION

A. Receptacles for Owner-Furnished Equipment: Match plug configuration.

1. Cord and Plug Sets: Match equipment requirements.

1.07 EXTRA MATERIALS

A. Furnish extra materials described in subparagraphs below that match products installed and that are packaged with protective covering for storage and identified with labels describing contents.

1. Service/Power Poles: One for every 10, but no less than one.

2. Floor Service Outlet Assemblies: One for every 10 but no less than one.

3. Poke-Through, Fire-Rated Closure Plugs: One for every five floor service outlets installed, but no fewer than two.

4. TVSS Receptacles: One for every 10 of each type installed, but no fewer than two of each type.

PART 2 - PRODUCTS

2.01 MANUFACTURERS

A. Manufacturers' Names: Shortened versions (shown in parentheses) of the following manufacturers' names are used in other Part 2 articles:

1. Pass & Seymour/Legrand

2. Hubbell Incorporated; Wiring Device-Kellems (Hubbell).

3. Leviton Mfg. Company Inc. (Leviton).

2.02 STRAIGHT BLADE RECEPTACLES

A. Convenience Receptacles, 125 V, 20 A: Comply with NEMA WD 1, NEMA WD 6 configuration 5-20R, and UL 498.

1. Products: Subject to compliance with requirements, provide one of the following:

a. Pass & Seymour/Legrand ; 5381 (single), 5352 (duplex).

b. Hubbell; HBL5351 (single), CR5352 (duplex).

c. Leviton; 5891 (single), 5352 (duplex).

B. Tamper-Resistant Convenience Receptacles, 125 V, 20 A: Comply with NEMA WD 1, NEMA WD 6 configuration 5-20R, and UL 498.

1. Products: Subject to compliance with requirements, provide one of the following:

a. Pass & Seymour; 63H

b. Hubbell; HBL8300SG.

c. Leviton; 8300-SGG.

2. Description: Labeled to comply with NFPA 70, "Health Care Facilities" Article, "Pediatric Locations" Section.

2.03 GFCI RECEPTACLES

A. General Description: Straight blade, feed-through type. Comply with NEMA WD 1, NEMA WD 6, UL 498, and UL 943, Class A, and include indicator light that is lighted when device is tripped.

B. Duplex GFCI Convenience Receptacles, 125 V, 20 A:

1. Products: Subject to compliance with requirements, provide one of the following:

a. Pass & Seymour/Legrand; 2084.

2.04 TWIST-LOCKING RECEPTACLES

A. Single Receptacles: Comply with NEMA WD 1, NEMA WD 6 configuration and ratings as indicated on Drawings, and UL 498.

1. Products: Subject to compliance with requirements, provide one of the following:

a. Pass & Seymour/Legrand

b. Hubbell

c. Leviton

B. Isolated-Ground, Single Receptacles:

1. Products: Subject to compliance with requirements, provide one of the following:

a. Hubbell

b. Leviton

c. Pass & Seymour/Legrand

2. Description: Comply with NEMA WD 1, NEMA WD 6 configuration L5-20R, and UL 498. Equipment grounding contacts shall be connected only to the green grounding screw terminal of the device and with inherent electrical isolation from mounting strap. Isolation shall be integral to receptacle construction and not dependent on removable parts.

2.05 PENDANT CORD-CONNECTOR DEVICES

A. Description: Matching, locking-type plug and receptacle body connector; NEMA WD 6 configurations L5-20P and L5-20R, heavy-duty grade.

1. Body: Nylon with screw-open cable-gripping jaws and provision for attaching external cable grip.

2. External Cable Grip: Woven wire-mesh type made of high-strength galvanized-steel wire strand, matched to cable diameter, and with attachment provision designed for corresponding connector.

2.06 CORD AND PLUG SETS

A. Description: Match voltage and current ratings and number of conductors to requirements of equipment being connected.

1. Cord: Rubber-insulated, stranded-copper conductors, with Type SOW-A jacket; with green-insulated grounding conductor and equipment-rating ampacity plus a minimum of 30 percent.

2. Plug: Nylon body and integral cable-clamping jaws. Match cord and receptacle type for connection.

2.07 SNAP SWITCHES

A. Comply with NEMA WD 1 and UL 20.

B. Switches, 120/277 V, 20 A:

1. Products: Subject to compliance with requirements, provide one of the following:

a. Pass & Seymour/Legrand; 20AC1 (single pole), 20AC2 (two pole), 20AC3 (three way), 20AC4 (four way).

b. Hubbell; CS1221 (single pole), CS1222 (two pole), CS1223 (three way), CS1224 (four way).

c. Leviton; 1221-2 (single pole), 1222-2 (two pole), 1223-2 (three way), 1224-2 (four way).

C. Pilot Light Switches, 20 A:

1. Products: Subject to compliance with requirements, provide one of the following:

a. Pass & Seymour/Legrand; PS20AC1-PLR for 120 V.

b. Hubbell; HPL1221PL for 120 V and 277 V.

c. Leviton; 1221-PLR for 120 V, 1221-7PLR for 277 V.

2. Description: Single pole, with neon-lighted handle, illuminated when switch is "ON."

D. Key-Operated Switches, 120/277 V, 20 A:

1. Products: Subject to compliance with requirements, provide one of the following:

a. Pass & Seymour/Legrand; PS20AC1-L.

b. Hubbell; HBL1221L.

c. Leviton; 1221-2L.

2. Description: Single pole, with factory-supplied key in lieu of switch handle.

E. Single-Pole, Double-Throw, Momentary Contact, Center-Off Switches, 120/277 V, 20 A; for use with mechanically held lighting contactors.

1. Products: Subject to compliance with requirements, provide one of the following:

a. Pass & Seymour/Legrand; 1251.

b. Hubbell; HBL1557.

c. Leviton; 1257.

F. Key-Operated, Single-Pole, Double-Throw, Momentary Contact, Center-Off Switches, 120/277 V, 20 A; for use with mechanically held lighting contactors, with factory-supplied key in lieu of switch handle.

1. Products: Subject to compliance with requirements, provide one of the following:

a. Pass & Seymour/Legrand; 1251L.

b. Hubbell; HBL1557L.

c. Leviton; 1257L.

2.08 WALL-BOX DIMMERS

A. Dimmer Switches: By same manufacturer of other devices to match dimming technology of connected light fixtures.

B. Control: Continuously adjustable slider; with single-pole or three-way switching. Comply with UL 1472.

2.09 OCCUPANCY SENSORS

A. Wall-Switch Sensors:

1. Products: Subject to compliance with requirements, provide one of the following:

a. Pass & Seymour/Legrand

b. Hubbell

c. Leviton

d. Watt Stopper

2. Description: Dual technology Passive-infrared type/Ultrasonic, 120/277 V, adjustable time delay up to 30 minutes, 180-degree field of view, with a minimum coverage area of 900 sq. ft.

B. Long-Range Wall-Switch Sensors:

1. Products: Subject to compliance with requirements, provide one of the following:

a. Hubbell; ATD1600WRP.

b. Leviton; ODW12-MRW.

c. Watt Stopper (The); DT-200.

d. Pass & Seymour/Legrand

2. Description: Dual technology, with both passive-infrared- and ultrasonic-type sensing, 120/277 V, adjustable time delay up to 30 minutes, 110-degree field of view, and a minimum coverage area of 1200 sq. ft.

C. Wide-Range Wall-Switch Sensors:

1. Products: Subject to compliance with requirements, provide one of the following:

a. Hubbell; ATP120HBRP.

b. Leviton; ODWHB-IRW.

c. Pass & Seymour; HS1001.

d. Watt Stopper (The); CX-100-3.

2. Description: Passive-infrared type, 120/277 V, adjustable time delay up to 30 minutes, 150-degree field of view, with a minimum coverage area of 1200 sq. ft.

D. Exterior Occupancy Sensors:

1. Products: Subject to compliance with requirements, provide one of the following:

a. Leviton; PS200-10.

b. Watt Stopper (The); EW-100-120.

c. Pass & Seymour/Legrand

2. Description: Passive-infrared type, 120/277 V, weatherproof, adjustable time delay up to 15 minutes, 180-degree field of view, and 110-foot detection range. Minimum switch rating: 1000-W incandescent, 500-VA fluorescent.

2.10 COMMUNICATIONS OUTLETS

A. Telephone Outlet:

1. Products: Subject to compliance with requirements, provide one of the following:

a. Cooper; 3560-6.

b. Leviton; 40649.

2. Description: Single RJ-45 jack for terminating 100-ohm, balanced, four-pair UTP; TIA/EIA-568-B.1; complying with Category 5e. Comply with UL 1863.

B. Combination TV and Telephone Outlet:

1. Products: Subject to compliance with requirements, provide one of the following:

a. Cooper; 3562.

b. Leviton; 40595.

2. Description: Single RJ-45 jack for 100-ohm, balanced, four-pair UTP; TIA/EIA-568-B.1; complying with Category 5e; and one Type F coaxial cable connector.

2.11 WALL PLATES

A. Single and combination types to be 302/304 stainless steel.

B. Wet-Location, Weatherproof Cover Plates: NEMA 250, complying with type 3R weather-resistant thermoplastic with lockable cover.

2.12 FLOOR SERVICE FITTINGS

A. Manufacturers: Subject to compliance with requirements, provide products by one of the following:

1. Hubbell Incorporated; System One.

B. Type: Modular, flush-type, dual-service units suitable for wiring method used.

C. Compartments: Barrier separates power from voice and data communication cabling.

D. Service Plate: Rectangular, solid brass, coordinate finish with Architect prior to ordering.

E. Power Receptacle: NEMA WD 6 configuration 5-20R, gray finish, unless otherwise indicated.

F. Voice and Data Communication Outlet: Blank cover with bushed cable opening.

2.13 POKE-THROUGH ASSEMBLIES

A. Manufacturers: Subject to compliance with requirements, provide products by one of the following:

1. Hubbell Incorporated; System One.

B. Description: Factory-fabricated and -wired assembly of below-floor junction box with multi-channeled, through-floor raceway/fire-stop unit and detachable matching floor service outlet assembly.

1. Service Outlet Assembly: Pedestal type with services indicated.

2. Size: Selected to fit nominal 3-inch cored holes in floor and matched to floor thickness.

3. Fire Rating: Unit is listed and labeled for fire rating of floor-ceiling assembly.

4. Closure Plug: Arranged to close unused 3-inch cored openings and reestablish fire rating of floor.

5. Wiring Raceways and Compartments: For a minimum of four No. 12 AWG conductors and a minimum of four, 4-pair, Category 5e voice and data communication cables.

2.14 MULTIOUTLET ASSEMBLIES

A. Manufacturers: Subject to compliance with requirements, provide products by one of the following:

1. Hubbell Incorporated; Wiring Device-Kellems.

B. Components of Assemblies: Products from a single manufacturer designed for use as a complete, matching assembly of raceways and receptacles.

C. Raceway Material: Metal, with manufacturer's standard finish.

D. Wire: Minimum No. 12 AWG.

2.15 SERVICE POLES

A. Description: Factory-assembled and -wired units to extend power and voice and data communication from distribution wiring concealed in ceiling to devices or outlets in pole near floor.

1. Poles: Nominal 2.5-inch square cross section, with height adequate to extend from floor to at least 6 inches above ceiling, and with separate channels for power wiring and voice and data communication cabling.

2. Mounting: Ceiling trim flange with concealed bracing arranged for positive connection to ceiling supports; with pole foot and carpet pad attachment.

3. Finishes: Manufacturer's standard painted finish and trim combination.

4. Wiring: Sized for minimum of five No. 12 AWG power and ground conductors and a minimum of four, 4-pair, Category 3 or 5 voice and data communication cables.

5. Power Receptacles: Two duplex, 20-A, heavy-duty, NEMA WD 6 configuration 5-20R units.

6. Voice and Data Communication Outlets: Blank insert with bushed cable opening.

2.16 FINISHES

A. Color: Wiring device catalog numbers in Section Text do not designate device color.

1. Wiring Devices Connected to Normal Power System: Ivory, or as selected by Architect unless otherwise indicated or required by NFPA 70 or device listing.

2. Wiring Devices Connected to Emergency Power System: Red.

3. TVSS Devices: Blue.

4. Isolated-Ground Receptacles: Orange.

PART 3 - EXECUTION

3.01 INSTALLATION

A. Comply with NECA 1, including the mounting heights listed in that standard, unless otherwise noted.

B. Coordination with Other Trades:

1. Take steps to insure that devices and their boxes are protected. Do not place wall finish materials over device boxes and do not cut holes for boxes with routers that are guided by riding against outside of the boxes. Cut holes need not to be more than 1/8” inch in all sides of the box.

2. Keep outlet boxes free of plaster, drywall joint compound, mortar, cement, concrete, dust, paint, and other material that may contaminate the raceway system, conductors, and cables.

3. Install device boxes in brick or block walls so that the cover plate does not cross a joint unless the joint is troweled flush with the face of the wall.

4. Boxes and conduit shall be rigidly supported to the wall. Do not use spacer type supports.

5. Install wiring devices after all wall preparation, including painting, is complete.

6. Do not use extension ring in any applications.

C. Conductors:

1. Do not strip insulation from conductors until just before they are spliced or terminated on devices.

2. Strip insulation evenly around the conductor using tools designed for the purpose. Avoid scoring or nicking of solid wire or cutting strands from stranded wire.

3. The length of free conductors at outlets for devices shall meet provisions of NFPA 70, Article 300.14, without pigtails. Multiple duplex receptacles shall be use pigtail and use the screw terminals to terminate the wire not the back of the receptacle outlet.

4. Conductors shall be identified with circuit number at the box.

5. Existing Conductors:
Cut back and pigtail or replace all damaged conductors.

a. Straighten conductors that remain and remove corrosion and foreign matter.

b. Pigtailing existing conductors is permitted provided the outlet box is large enough.

D. Device Installation:

1. Replace all devices that have been in temporary use during construction or that show signs that they were installed before building finishing operations were complete.

2. Keep each wiring device in its package or otherwise protected until it is time to connect conductors.

3. Do not remove surface protection, such as plastic film and smudge covers, until the last possible moment.

4. Connect devices to branch circuits using pigtails that are not less than 6 inches in length.

5. Use side wiring with binding-head screw terminals. Wrap solid conductor tightly clockwise, 2/3 to 3/4 of the way around terminal screw.

6. Use a torque screwdriver when a torque is recommended or required by the manufacturer.

7. When conductors larger than No. 12 AWG are installed on 20-A circuits, splice No. 12 AWG pigtails for device connections.

8. Tighten unused terminal screws on the device.

9. When mounting into metal boxes, remove the fiber or plastic washers used to hold device mounting screws in yokes, allowing metal-to-metal contact.

E. Receptacle Orientation:

1. Install ground pin of vertically mounted receptacles down, and on horizontally mounted receptacles to the right.

2. Install hospital-grade receptacles in patient-care areas with the ground pin or neutral blade at the top.

F. Device Plates: Do not use oversized or extra-deep plates. Repair wall finishes and remount outlet boxes when standard device plates do not fit flush or do not cover rough wall opening.

G. Dimmers:

1. Install dimmers within terms of their listing.

2. Verify that dimmers used for fan speed control are listed for that application.

3. Install unshared neutral conductors on line and load side of dimmers according to manufacturers' device listing conditions in the written instructions.

H. Arrangement of Devices: Unless otherwise indicated, mount flush, with long dimension vertical and with grounding terminal of receptacles on top. Group adjacent switches under single, multi-gang wall plates.

I. Adjust locations of floor service outlets and service poles to suit arrangement of partitions and furnishings.

3.02 IDENTIFICATION

A. Comply with Division 26 Section "Identification for Electrical Systems."

1. Receptacles: Identify panelboard and circuit number from which served. Use hot, stamped or engraved machine printing with black-filled lettering on face of plate, and durable wire markers or tags inside outlet boxes.

2. Receptacles: Label or marked the cover with panel and circuit number back and front cover.

3.03 FIELD QUALITY CONTROL

A. Perform tests and inspections and prepare test reports.

1. In healthcare facilities, prepare reports that comply with recommendations in NFPA 99.

2. Test Instruments: Use instruments that comply with UL 1436.

3. Test Instrument for Convenience Receptacles: Digital wiring analyzer with digital readout or illuminated LED indicators of measurement.

B. Tests for Convenience Receptacles:

1. Line Voltage: Acceptable range is 105 to 132 V.

2. Percent Voltage Drop under 15-A Load: A value of 6 percent or higher is not acceptable.

3. Ground Impedance: Values of up to 2 ohms are acceptable.

4. GFCI Trip: Test for tripping values specified in UL 1436 and UL 943.

5. Using the test plug, verify that the device and its outlet box are securely mounted.

6. The tests shall be diagnostic, indicating damaged conductors, high resistance at the circuit breaker, poor connections, inadequate fault current path, defective devices, or similar problems. Correct circuit conditions, remove malfunctioning units and replace with new ones, and retest as specified above.

END OF SECTION 26 27 26

26 28 13

FUSES

PART 1 - GENERAL

1.01 RELATED DOCUMENTS

A. Drawings and general provisions of the Contract, including General and Supplementary Conditions and Division 01 Specification Sections, apply to this Section.

1.02 SUMMARY

A. Section Includes:

1. Cartridge fuses rated 600-V ac and less for use in control circuits, enclosed switches, panelboards, switchboards, enclosed controllers, and motor-control centers.

2. Plug fuses rated 125-V ac and less for use in plug-fuse-type enclosed switches, fuse-holders, and panelboards.

3. Plug-fuse adapters for use in Edison-base, plug-fuse sockets.

4. Spare-fuse cabinets.

1.03 SUBMITTALS

A. Product Data: For each type of product indicated. Include construction details, material, dimensions, descriptions of individual components, and finishes for spare-fuse cabinets. Include the following for each fuse type indicated:

1. Ambient Temperature Adjustment Information: If ratings of fuses have been adjusted to accommodate ambient temperatures, provide list of fuses with adjusted ratings.

a. For each fuse having adjusted ratings, include location of fuse, original fuse rating, local ambient temperature, and adjusted fuse rating.

b. Provide manufacturer's technical data on which ambient temperature adjustment calculations are based.

2. Dimensions and manufacturer's technical data on features, performance, electrical characteristics, and ratings.

3. Current-limitation curves for fuses with current-limiting characteristics.

4. Time-current coordination curves (average melt) and current-limitation curves (instantaneous peak let-through current) for each type and rating of fuse.

5. Coordination charts and tables and related data.

6. Fuse sizes for elevator feeders and elevator disconnect switches.

B. Operation and Maintenance Data: For fuses to include in emergency, operation, and maintenance manuals. In addition to items specified in Division 01 Section "Operation and Maintenance Data," include the following:

1. Ambient temperature adjustment information.

2. Current-limitation curves for fuses with current-limiting characteristics.

3. Time-current coordination curves (average melt) and current-limitation curves (instantaneous peak let-through current) for each type and rating of fuse.

4. Coordination charts and tables and related data.

1.04 QUALITY ASSURANCE

A. Source Limitations: Obtain fuses, for use within a specific product or circuit, from single source from single manufacturer.

B. Electrical Components, Devices, and Accessories: Listed and labeled as defined in NFPA 70, by a qualified testing agency, and marked for intended location and application.

C. Comply with NEMA FU 1 for cartridge fuses.

D. Comply with NFPA 70.

E. Comply with UL 248-11 for plug fuses.

1.05 COORDINATION

A. Coordinate fuse ratings with utilization equipment nameplate limitations of maximum fuse size and with system short-circuit current levels.

1.06 EXTRA MATERIALS

A. Furnish extra materials that match products installed and that are packaged with protective covering for storage and identified with labels describing contents.

PART 2 - PRODUCTS

2.01 MANUFACTURERS

A. Manufacturers: Subject to compliance with requirements, provide products by one of the following:

1. Cooper Bussmann, Inc.

2. Littelfuse, Inc.

2.02 CARTRIDGE FUSES

A. Characteristics: NEMA FU 1, nonrenewable cartridge fuses with voltage ratings consistent with circuit voltages.

2.03 PLUG FUSES

A. Characteristics: UL 248-11, nonrenewable plug fuses; 125-V ac.

2.04 PLUG-FUSE ADAPTERS

A. Characteristics: Adapters for using Type S, rejection-base plug fuses in Edison-base fuse-holders or sockets; ampere ratings matching fuse ratings; irremovable once installed.

2.05 SPARE-FUSE CABINET

PART 3 - EXECUTION

3.01 EXAMINATION

A. Examine fuses before installation. Reject fuses that are moisture damaged or physically damaged.

B. Examine holders to receive fuses for compliance with installation tolerances and other conditions affecting performance, such as rejection features.

C. Examine utilization equipment nameplates and installation instructions. Install fuses of sizes and with characteristics appropriate for each piece of equipment.

D. Evaluate ambient temperatures to determine if fuse rating adjustment factors must be applied to fuse ratings.

E. Proceed with installation only after unsatisfactory conditions have been corrected.

3.02 FUSE APPLICATIONS

A. Cartridge Fuses:

1. Service Entrance: Class L, fast acting.

2. Feeders: Class L, fast acting

3. Motor Branch Circuits: Class RK1 and Class RK5, time delay.

4. Other Branch Circuits: Class J, fast acting.

5. Control Circuits: Class CC, fast acting.

3.03 INSTALLATION

A. Install fuses in fusible devices. Arrange fuses so rating information is readable without removing fuse.

B. Install plug-fuse adapters in Edison-base fuse-holders and sockets. Ensure that adapters are irremovable once installed.

C. Install spare-fuse cabinet(s).

3.04 IDENTIFICATION

A. Install labels complying with requirements for identification specified in Division 26 Section "Identification for Electrical Systems" and indicating fuse replacement information on inside door of each fused switch and adjacent to each fuse block, socket, and holder.

END OF SECTION 26 28 13

THIS PAGE WAS LEFT BLANK INTENTIONALLY

26 28 16

ENCLOSED SWITCHES AND CIRCUIT BREAKERS

PART 1 - GENERAL

1.01 RELATED DOCUMENTS

A. Drawings and general provisions of the Contract, including General and Supplementary Conditions and other Division 01 Specification Sections, apply to this Section.

1.02 SUMMARY

A. Section Includes:

1. Fusible switches.
2. Non-fusible switches.
3. Receptacle switches.
4. Shunt trip switches.
5. Molded-case circuit breakers.
6. Enclosures.

1.03 DEFINITIONS

A. NC: Normally closed.

B. NO: Normally open.

C. SPDT: Single pole, double throw.

1.04 SUBMITTALS

A. Product Data: For each type of enclosed switch, circuit breaker, accessory, and component indicated. Include dimensioned elevations, sections, weights, and manufacturers' technical data on features, performance, electrical characteristics, ratings, accessories, and finishes.

1. Enclosure types and details for types other than NEMA 250, Type 1.
2. Current and voltage ratings.
3. Short-circuit current ratings (interrupting and withstand, as appropriate).
4. Detail features, characteristics, ratings, and factory settings of individual over-current protective devices, accessories, and auxiliary components.

5. Include time-current coordination curves (average melt) for each type and rating of over-current protective device; include selectable ranges for each type of over-current protective device.

B. Shop Drawings: For enclosed switches and circuit breakers. Include plans, elevations, sections, details, and attachments to other work.

1. Wiring Diagrams: For power, signal, and control wiring.

C. Qualification Data: For qualified testing agency.

D. Seismic Qualification Certificates: For enclosed switches and circuit breakers, accessories, and components, from manufacturer.

1. Basis for Certification: Indicate whether withstand certification is based on actual test of assembled components or on calculation.

2. Dimensioned Outline Drawings of Equipment Unit: Identify center of gravity and locate and describe mounting and anchorage provisions.

3. Detailed description of equipment anchorage devices on which the certification is based and their installation requirements.

E. Field quality-control reports.

1. Test procedures used.

2. Test results that comply with requirements.

3. Results of failed tests and corrective action taken to achieve test results that comply with requirements.

F. Manufacturer's field service report.

G. Operation and Maintenance Data: For enclosed switches and circuit breakers to include in emergency, operation, and maintenance manuals. In addition to items specified in Division 01 Section "Operation and Maintenance Data," include the following:

1. Manufacturer's written instructions for testing and adjusting enclosed switches and circuit breakers.

2. Time-current coordination curves (average melt) for each type and rating of over-current protective device; include selectable ranges for each type of over-current protective device.

1.05 QUALITY ASSURANCE

A. Source Limitations: Obtain enclosed switches and circuit breakers, over-current protective devices, components, and accessories, within same product category, from single source from single manufacturer.

B. Product Selection for Restricted Space: Drawings indicate maximum dimensions for enclosed switches and circuit breakers, including clearances between enclosures, and adjacent surfaces and other items. Comply with indicated maximum dimensions.

C. Electrical Components, Devices, and Accessories: Listed and labeled as defined in NFPA 70, by a qualified testing agency, and marked for intended location and application.

D. Comply with NFPA 70.

1.06 COORDINATION

A. Coordinate layout and installation of switches, circuit breakers, and components with equipment served and adjacent surfaces. Maintain required workspace clearances and required clearances for equipment access doors and panels.

1.07 EXTRA MATERIALS

A. Furnish extra materials that match products installed and that are packaged with protective covering for storage and identified with labels describing contents.

1. Fuses: Equal to 10 percent of quantity installed for each size and type, but no fewer than three of each size and type.

2. Fuse Pullers: Two for each size and type.

PART 2 - PRODUCTS

2.01 FUSIBLE SWITCHES

A. Manufacturers: Subject to compliance with requirements, provide products by one of the following:

1. Square D / Schneider Electric

2. Cutler-Hammer / Eaton

3. General Electric / ABB

4. Siemens

B. Type HD, Heavy Duty, Six Pole, Single Throw, 600-V ac, 200 A and Smaller: UL 98 and NEMA KS 1, horsepower rated, with clips or bolt pads to accommodate indicated fuses, lockable handle with capability to accept three padlocks, and interlocked with cover in closed position.

C. Type HD, Heavy Duty, Double Throw, 600-V ac, 1200 A and Smaller: UL 98 and NEMA KS 1, horsepower rated, with clips or bolt pads to accommodate indicated fuses, lockable handle with capability to accept three padlocks, and interlocked with cover in closed position.

D. Accessories:

1. Equipment Ground Kit: Internally mounted and labeled for copper and aluminum ground conductors.

2. Neutral Kit: Internally mounted; insulated, capable of being grounded and bonded; labeled for copper and aluminum neutral conductors.

3. Isolated Ground Kit: Internally mounted; insulated, capable of being grounded and bonded; labeled for copper and aluminum neutral conductors.

4. Class R Fuse Kit: Provides rejection of other fuse types when Class R fuses are specified.

5. Auxiliary Contact Kit: Two NO/NC (Form "C") auxiliary contact(s), arranged to activate before switch blades open.

6. Hook stick Handle: Allows use of a hook stick to operate the handle.

7. Lugs: Mechanical type, suitable for number, size, and conductor material.

8. Service-Rated Switches: Labeled for use as service equipment.

9. Accessory Control Power Voltage: Remote mounted and powered; 120-V ac.

2.02 NONFUSIBLE SWITCHES

A. Manufacturers: Subject to compliance with requirements, provide products by one of the following:

1. Square D / Schneider Electric

2. Cutler-Hammer / Eaton

3. General Electric / ABB

4. Siemens

B. Type HD, Heavy Duty, Single Throw, 240, 600-V ac, 1200 A and Smaller: UL 98 and NEMA KS 1, horsepower rated, lockable handle with capability to accept three padlocks, and interlocked with cover in closed position.

C. Type HD, Heavy Duty, Six Pole, Single Throw, 240, 600-V ac, 200 A and Smaller: UL 98 and NEMA KS 1, horsepower rated, lockable handle with capability to accept three padlocks, and interlocked with cover in closed position.

D. Type HD, Heavy Duty, Double Throw, 240, 600-V ac, 1200 A and Smaller: UL 98 and NEMA KS 1, horsepower rated, lockable handle with capability to accept three padlocks, and interlocked with cover in closed position.

E. Accessories:

1. Equipment Ground Kit: Internally mounted and labeled for copper and aluminum ground conductors.

2. Neutral Kit: Internally mounted; insulated, capable of being grounded and bonded; labeled for copper and aluminum neutral conductors.

3. Isolated Ground Kit: Internally mounted; insulated, capable of being grounded and bonded; labeled for copper and aluminum neutral conductors.

4. Auxiliary Contact Kit: Two NO/NC (Form "C") auxiliary contact(s), arranged to activate before switch blades open.

5. Hook-stick Handle: Allows use of a hook-stick to operate the handle.

6. Lugs: Mechanical type, suitable for number, size, and conductor material.

7. Accessory Control Power Voltage: Remote mounted and powered; 120-V ac.

2.03 MOLDED-CASE CIRCUIT BREAKERS

A. Manufacturers: Subject to compliance with requirements, provide products by one of the following:

1. Square D / Schneider Electric

2. Cutler-Hammer / Eaton

3. General Electric / ABB

4. Siemens

B. General Requirements: Comply with UL 489, NEMA AB 1, and NEMA AB 3, with interrupting capacity to comply with available fault currents.

C. Thermal-Magnetic Circuit Breakers: Inverse time-current element for low-level overloads and instantaneous magnetic trip element for short circuits. Adjustable magnetic trip setting for circuit-breaker frame sizes 250 A and larger.

D. Adjustable, Instantaneous-Trip Circuit Breakers: Magnetic trip element with front-mounted, field-adjustable trip setting.

E. Electronic Trip Circuit Breakers: Field-replaceable rating plug, rms sensing, with the following field-adjustable settings:

1. Instantaneous trip.

2. Long- and short-time pickup levels.

3. Long- and short-time time adjustments.

4. Ground-fault pickup level, time delay, and I^2t response.

F. Current-Limiting Circuit Breakers: Frame sizes 400 A and smaller, and let-through ratings less than NEMA FU 1, RK-5.

G. Integrally Fused Circuit Breakers: Thermal-magnetic trip element with integral limiter-style fuse listed for use with circuit breaker and trip activation on fuse opening or on opening of fuse compartment door.

H. Ground-Fault, Circuit-Interrupter (GFCI) Circuit Breakers: Single- and two-pole configurations with Class A ground-fault protection (6-mA trip).

I. Ground-Fault, Equipment-Protection (GFEP) Circuit Breakers: With Class B ground-fault protection (30-mA trip).

J. Features and Accessories:

1. Standard frame sizes, trip ratings, and number of poles.

2. Lugs: Mechanical type, suitable for number, size, trip ratings, and conductor material.

3. Application Listing: Appropriate for application; Type SWD for switching fluorescent lighting loads; Type HID for feeding fluorescent and high-intensity discharge lighting circuits.

4. Ground-Fault Protection: Comply with UL 1053; integrally mounted, self-powered type with mechanical ground-fault indicator; relay with adjustable pickup and time-delay settings, push-to-test feature, internal memory, and shunt trip unit; and three-phase, zero-sequence current transformer/sensor.

5. Communication Capability: Integral communication module with functions and features compatible with power monitoring and control system, specified in Division 26 Section "Electrical Power Monitoring and Control."

6. Shunt Trip: Trip coil energized from separate circuit, with coil-clearing contact.

7. Under-voltage Trip: Set to operate at 35 to 75 percent of rated voltage without intentional time delay.

8. Auxiliary Contacts: Two SPDT switches with "a" and "b" contacts; "a" contacts mimic circuit-breaker contacts, "b" contacts operate in reverse of circuit-breaker contacts.

9. Key Interlock Kit: Externally mounted to prohibit circuit-breaker operation; key shall be removable only when circuit breaker is in off position.

10. Electrical Operator: Provide remote control for on, off, and reset operations.

2.04 ENCLOSURES

A. Enclosed Switches and Circuit Breakers: NEMA AB 1, NEMA KS 1, NEMA 250, and UL 50, to comply with environmental conditions at installed location.

1. Indoor, Dry and Clean Locations: NEMA 250, Type 1.

2. Outdoor Locations: NEMA 250, Type 3R.

3. Kitchen and Wash-Down Areas: NEMA 250, Type 4X, SS-304.

4. Other Wet or Damp, Indoor Locations: NEMA 250, Type 4X SS-304.

5. Indoor Locations Subject to Dust, Falling Dirt, and Dripping Non-corrosive Liquids: NEMA 250, Type 12.

6. Hazardous Areas Indicated on Drawings: NEMA 250, Type 7.

PART 3 - EXECUTION

3.01 EXAMINATION

A. Examine elements and surfaces to receive enclosed switches and circuit breakers for compliance with installation tolerances and other conditions affecting performance of the Work.

B. Proceed with installation only after unsatisfactory conditions have been corrected.

3.02 INSTALLATION

A. Install individual wall-mounted switches and circuit breakers with tops at uniform height unless otherwise indicated.

B. Comply with mounting and anchoring requirements specified in Division 26 Section "Vibration and Seismic Controls for Electrical Systems."

C. Temporary Lifting Provisions: Remove temporary lifting eyes, channels, and brackets and temporary blocking of moving parts from enclosures and components.

D. Install fuses in fusible devices.

E. Comply with NECA 1.

3.03 IDENTIFICATION

A. Comply with requirements in Division 26 Section "Identification for Electrical Systems."

1. Identify field-installed conductors, interconnecting wiring, and components; provide warning signs.

2. Label each enclosure with engraved metal or laminated-plastic nameplate.

3.04 FIELD QUALITY CONTROL

A. Perform tests and inspections.

1. Manufacturer's Field Service: Engage a factory-authorized service representative to inspect components, assemblies, and equipment installations, including connections, and to assist in testing.

B. Acceptance Testing Preparation:

1. Test insulation resistance for each enclosed switch and circuit breaker, component, connecting supply, feeder, and control circuit.

2. Test continuity of each circuit.

C. Tests and Inspections:

1. Perform each visual and mechanical inspection and electrical test stated in NETA Acceptance Testing Specification. Certify compliance with test parameters.

2. Correct malfunctioning units on-site, where possible, and retest to demonstrate compliance; otherwise, replace with new units and retest.

3. Perform the following infrared scan tests and inspections and prepare reports:

a. Initial Infrared Scanning: After Substantial Completion, but not more than 60 days after Final Acceptance, perform an infrared scan of each enclosed switch and circuit breaker. Remove front panels so joints and connections are accessible to portable scanner.

b. Follow-up Infrared Scanning: Perform an additional follow-up infrared scan of each enclosed switch and circuit breaker 11 months after date of Substantial Completion.

c. Instruments and Equipment: Use an infrared scanning device designed to measure temperature or to detect significant deviations from normal values. Provide calibration record for device.

4. Test and adjust controls, remote monitoring, and safeties. Replace damaged and malfunctioning controls and equipment.

D. Enclosed switches and circuit breakers will be considered defective if they do not pass tests and inspections.

E. Prepare test and inspection report, including a certified report that identifies enclosed switches and circuit breakers and that describes scanning results. Include notation of deficiencies detected, remedial action taken and observations after remedial action.

3.05 ADJUSTING

A. Adjust moving parts and operable components to function smoothly and lubricate as recommended by manufacturer.

END OF SECTION 26 28 16

This page intentionally left blank.

26 29 13

ENCLOSED CONTROLLERS

PART 1 - GENERAL

1.01 RELATED DOCUMENTS

A. Drawings and general provisions of the Contract, including General and Supplementary Conditions and Division 01 Specification Sections, apply to this Section.

1.02 SUMMARY

A. Section includes the following enclosed controllers rated 600V and less:

1. Full-voltage manual.

2. Full-voltage magnetic.

3. Reduced-voltage magnetic.

4. Reduced-voltage solid state.

5. Multi-speed.

B. Related Section:

1. Division 26 Section "Variable-Frequency Motor Controllers" for general-purpose, ac, adjustable-frequency, pulse-width-modulated controllers for use on variable torque loads in ranges up to 200HP.

1.03 DEFINITIONS

A. CPT: Control power transformer.

B. MCCB: Molded-case circuit breaker.

C. MCP: Motor circuit protector.

D. N.C.: Normally closed.

E. N.O.: Normally open.

F. OCPD: Over-current protective device.

G. SCR: Silicon-controlled rectifier.

1.04 SUBMITTALS

A. Product Data: For each type of enclosed controller. Include manufacturer's technical data on features, performance, electrical characteristics, ratings, and enclosure types and finishes.

B. Shop Drawings: For each enclosed controller. Include dimensioned plans, elevations, sections, details, and required clearances and service spaces around controller enclosures.

1. Show tabulations of the following:

a. Each installed unit's type and details.

b. Factory-installed devices.

c. Nameplate legends.

d. Short-circuit current rating of integrated unit.

e. Listed and labeled for integrated short-circuit current (withstand) rating of OCPDs in combination controllers by an NRTL acceptable to authorities having jurisdiction.

f. Features, characteristics, ratings, and factory settings of individual OCPDs in combination controllers.

2. Wiring Diagrams: For power, signal, and control wiring.

C. Qualification Data: For qualified testing agency.

D. Seismic Qualification Certificates: For enclosed controllers, accessories, and components, from manufacturer.

1. Basis for Certification: Indicate whether withstand certification is based on actual test of assembled components or on calculation.

2. Dimensioned Outline Drawings of Equipment Unit: Identify center of gravity and locate and describe mounting and anchorage provisions.

3. Detailed description of equipment anchorage devices on which the certification is based and their installation requirements.

E. Field quality-control reports.

F. Operation and Maintenance Data: For enclosed controllers to include in emergency, operation, and maintenance manuals. In addition to items specified in Division 01 Section "Operation and Maintenance Data," include the following:

1. Routine maintenance requirements for enclosed controllers and installed components.

2. Manufacturer's written instructions for testing and adjusting circuit breaker and MCP trip settings.

3. Manufacturer's written instructions for setting field-adjustable overload relays.

4. Manufacturer's written instructions for testing, adjusting, and reprogramming reduced-voltage solid-state controllers.

G. Load-Current and Overload-Relay Heater List: Compile after motors have been installed, and arrange to demonstrate that selection of heaters suits actual motor nameplate full-load currents.

H. Load-Current and List of Settings of Adjustable Overload Relays: Compile after motors have been installed, and arrange to demonstrate that switch settings for motor running overload protection suit actual motors to be protected.

1.05 QUALITY ASSURANCE

A. Testing Agency Qualifications: Member company of NETA or an NRTL.

1. Testing Agency's Field Supervisor: Currently certified by NETA to supervise on-site testing.

B. Electrical Components, Devices, and Accessories: Listed and labeled as defined in NFPA 70, by a qualified testing agency, and marked for intended location and application.

C. Comply with NFPA 70.

D. IEEE Compliance: Fabricate and test enclosed controllers according to IEEE 344 to withstand seismic forces defined in Division 26 Section "Vibration and Seismic Controls for Electrical Systems."

1.06 DELIVERY, STORAGE, AND HANDLING

A. Store enclosed controllers indoors in clean, dry space with uniform temperature to prevent condensation. Protect enclosed controllers from exposure to dirt, fumes, water, corrosive substances, and physical damage.

B. If stored in areas subject to weather, cover enclosed controllers to protect them from weather, dirt, dust, corrosive substances, and physical damage. Remove loose packing and flammable materials from inside controllers.

1.07 PROJECT CONDITIONS

A. Interruption of Existing Electrical Systems: Do not interrupt electrical systems in facilities occupied by Owner or others unless permitted under the following conditions and then only after arranging to provide temporary electrical service according to requirements indicated:

1. Notify Owner no fewer than 10 days in advance of proposed interruption of electrical systems.

2. Indicate method of providing temporary utilities.

3. Do not proceed with interruption of electrical systems without Owner's written permission.

4. Comply with NFPA 70E.

1.08 COORDINATION

A. Coordinate layout and installation of enclosed controllers with other construction including conduit, piping, equipment, and adjacent surfaces. Maintain required workspace clearances and required clearances for equipment access doors and panels.

B. Coordinate sizes and locations of concrete bases with actual equipment provided. Cast anchor-bolt inserts into bases. Concrete, reinforcement, and formwork requirements are specified in Division 03.

C. Coordinate installation of roof curbs, equipment supports, and roof penetrations.

1.09 EXTRA MATERIALS

A. Furnish extra materials that match products installed and that are packaged with protective covering for storage and identified with labels describing contents.

1. Fuses for Fused Switches: Equal to 10 percent of quantity installed for each size and type, but no fewer than 3 of each size and type.

2. Control Power Fuses: Equal to 10 percent of quantity installed for each size and type, but no fewer than 2 of each size and type.

3. Indicating Lights: 2 of each type and color installed.

4. Auxiliary Contacts: Furnish 1 spare(s) for each size and type of magnetic controller installed.

5. Power Contacts: Furnish 3 spares for each size and type of magnetic contactor installed.

PART 2 - PRODUCTS

2.01 FULL-VOLTAGE CONTROLLERS

A. General Requirements for Full-Voltage Controllers: Comply with NEMA ICS 2, general purpose, Class A.

B. Motor-Starting Switches: "Quick-make, quick-break" toggle or push-button action; marked to show whether unit is off or on.

1. Manufacturers: Subject to compliance with requirements, provide products by one of the following:

a. Square D.

b. GE.

c. Cutler-Hammer.

d. Asco

2. Configuration: Non-Reversing.

3. Surface mounting.

4. Red pilot light.

C. Fractional Horsepower Manual Controllers: "Quick-make, quick-break" toggle or push-button action; marked to show whether unit is off, on, or tripped.

1. Manufacturers: Subject to compliance with requirements, provide products by one of the following

a. Square D.

b. GE.

c. Cutler-Hammer.

d. Asco

2. Configuration: Non-reversing.

3. Overload Relays: Inverse-time-current characteristics; NEMA ICS 2, Class 10 tripping characteristics; heaters matched to nameplate full-load current of actual protected motor; external reset push button.

4. Surface mounting.

5. Not all manufacturers offer a green pilot light; pilot lights are not available in hazardous and some cast-type enclosures.

6. Red pilot light.

D. Magnetic Controllers: Full voltage, across the line, electrically held.

1. Manufacturers: Subject to compliance with requirements, provide products by one of the following:

a. Square D.

b. GE.

c. Cutler-Hammer.

d. Asco

2. Configuration: Non-reversing.

3. Power Contacts: Totally enclosed, double-break, silver-cadmium oxide; assembled to allow inspection and replacement without disturbing line or load wiring.

4. Control Circuits: 120 V ac; obtained from integral CPT, with primary and secondary fuses and sufficient capacity to operate integral devices and remotely located pilot, indicating, and control devices.

5. Solid-State Overload Relay:

   a. Switch or dial selectable for motor running overload protection.

   b. Sensors in each phase.

   c. Class 10/20 selectable tripping characteristic selected to protect motor against voltage and current unbalance and single phasing.

   d. Class II ground-fault protection, with start and run delays to prevent nuisance trip on starting.

   e. Analog communication module.

6. External overload reset push button.

E. Combination Magnetic Controller: Factory-assembled combination of magnetic controller, OCPD, and disconnecting means.

1. Manufacturers: Subject to compliance with requirements, provide products by one of the following

   a. Square D / Schneider Electric

   b. Cutler-Hammer / Eaton

   c. General Electric / ABB

   d. Siemens

2. MCP Disconnecting Means:

   a. UL 489, NEMA AB 1, and NEMA AB 3, with interrupting capacity to comply with available fault currents, instantaneous-only circuit breaker with front-mounted, field-adjustable, short-circuit trip coordinated with motor locked-rotor amperes.

   b. Lockable Handle: Accepts three padlocks and interlocks with cover in closed position.

   c. Auxiliary contacts "a" and "b" arranged to activate with MCP handle.

   d. N.C. alarm contact that operates only when MCP has tripped.

   e. Current-limiting module to increase controller short-circuit current (withstand) rating to 100 kA.

3. MCCB Disconnecting Means:

    a. UL 489, NEMA AB 1, and NEMA AB 3, with interrupting capacity to comply with available fault currents; thermal-magnetic MCCB, with inverse time-current element for low-level overloads and instantaneous magnetic trip element for short circuits.

    b. Front-mounted, adjustable magnetic trip setting for circuit-breaker frame sizes 250 A and larger.

    c. Lockable Handle: Accepts three padlocks and interlocks with cover in closed position.

    d. Auxiliary contacts "a" and "b" arranged to activate with MCCB handle.

    e. N.C. alarm contact that operates only when MCCB has tripped.

2.02 ENCLOSURES

A. Enclosed Controllers: NEMA ICS 6, to comply with environmental conditions at installed location.

1. Dry and Clean Indoor Locations: Type 1.

2. Outdoor Locations: Type 3R.

3. Kitchen and Wash-Down Areas: Type 4X, stainless steel.

4. Other Wet or Damp Indoor Locations: Type 4X-ss.

5. Indoor Locations Subject to Dust, Falling Dirt, and Dripping Non-corrosive Liquids: Type 12.

6. Hazardous Areas Indicated on Drawings: Type 9.

2.03 ACCESSORIES

A. General Requirements for Control Circuit and Pilot Devices: NEMA ICS 5; factory installed in controller enclosure cover unless otherwise indicated.

1. Push Buttons, Pilot Lights, and Selector Switches: Heavy duty, oil-tight type.

B. N.C., N.O. auxiliary contact(s).

C. Control Relays: Auxiliary and adjustable solid-state time-delay relays.

D. Phase-Failure, Phase-Reversal, and Under-voltage and Over-voltage Relays: Solid-state sensing circuit with isolated output contacts for hard-wired connections. Provide adjustable under-voltage, over-voltage, and time-delay settings.

E. Breather and drain assemblies, to maintain interior pressure and release condensation in Type 4X enclosures installed outdoors or in unconditioned interior spaces subject to humidity and temperature swings.

F. Space heaters, with N.C. auxiliary contacts, to mitigate condensation in Type 3R enclosures installed outdoors or in unconditioned interior spaces subject to humidity and temperature swings.

G. Sun shields installed on fronts, sides, and tops of enclosures installed outdoors and subject to direct and extended sun exposure.

H. Cover gaskets for Type 1 enclosures.

I. Terminals for connecting power factor correction capacitors to the load side of overload relays.

J. Spare control wiring terminal blocks, quantity as indicated; unwired.

PART 3 - EXECUTION

3.01 EXAMINATION

A. Examine areas and surfaces to receive enclosed controllers, with Installer present, for compliance with requirements and other conditions affecting performance of the Work.

B. Examine enclosed controllers before installation. Reject enclosed controllers that are wet, moisture damaged, or mold damaged.

C. Proceed with installation only after unsatisfactory conditions have been corrected.

3.02 INSTALLATION

A. Wall-Mounted Controllers: Install enclosed controllers on walls with tops at uniform height unless otherwise indicated, and by bolting units to wall or mounting on lightweight structural-steel channels bolted to wall. For controllers not at walls, provide freestanding racks complying with Division 26 Section "Hangers and Supports for Electrical Systems."

B. Floor-Mounted Controllers: Install enclosed controllers on 4-inch nominal-thickness concrete base. Comply with requirements for concrete base specified in Division 03 Section.

1. Install dowel rods to connect concrete base to concrete floor. Unless otherwise indicated, install dowel rods on 18-inch centers around the full perimeter of concrete base.

2. For supported equipment, install epoxy-coated anchor bolts that extend through concrete base and anchor into structural concrete floor.

3. Place and secure anchorage devices. Use setting drawings, templates, diagrams, instructions, and directions furnished with items to be embedded.

4. Install anchor bolts to elevations required for proper attachment to supported equipment.

C. Temporary Lifting Provisions: Remove temporary lifting eyes, channels, and brackets and temporary blocking of moving parts from enclosures and components.

D. Install fuses in each fusible-switch enclosed controller.

E. Install fuses in control circuits if not factory installed. Comply with requirements in Division 26 Section "Fuses."

F. Install heaters in thermal overload relays. Select heaters based on actual nameplate full-load amperes after motors have been installed.

G. Install, connect, and fuse thermal-protector monitoring relays furnished with motor-driven equipment.

H. Install power factor correction capacitors. Connect to the line/load side of overload relays. If connected to the load side of overload relays, adjust overload heater sizes to accommodate the reduced motor full-load currents.

I. Comply with NECA 1.

3.03 IDENTIFICATION

A. Identify enclosed controllers, components, and control wiring. Comply with requirements for identification specified in Division 26 Section "Identification for Electrical Systems."

1. Identify field-installed conductors, interconnecting wiring, and components; provide warning signs.

2. Label each enclosure with engraved nameplate.

3. Label each enclosure-mounted control and pilot device.

3.04 CONTROL WIRING INSTALLATION

A. Install wiring between enclosed controllers and remote devices. Comply with requirements in Division 26 Section "Control-Voltage Electrical Power Cables."

B. Bundle, train, and support wiring in enclosures. Use ‘Panduit’ where possible.

C. Connect selector switches and other automatic-control selection devices where applicable.

1. Connect selector switches to bypass only those manual- and automatic-control devices that have no safety functions when switch is in manual-control position.

2. Connect selector switches with enclosed-controller circuit in both manual and automatic positions for safety-type control devices such as low- and high-pressure cutouts, high-temperature cutouts, and motor overload protectors.

3.05 FIELD QUALITY CONTROL

A. Perform tests and inspections.

1. Manufacturer's Field Service: Engage a factory-authorized service representative to inspect components, assemblies, and equipment installations, including connections, and to assist in testing.

B. Acceptance Testing Preparation:

1. Test insulation resistance for each enclosed controller, component, connecting supply, feeder, and control circuit.

2. Test continuity of each circuit.

C. Tests and Inspections:

1. Inspect controllers, wiring, components, connections, and equipment installation. Test and adjust controllers, components, and equipment.

2. Test insulation resistance for each enclosed-controller element, component, connecting motor supply, feeder, and control circuits.

3. Test continuity of each circuit.

4. Verify that voltages at controller locations are within plus or minus 10 percent of motor nameplate rated voltages. If outside this range for any motor, notify Owner before starting the motor(s).

5. Test each motor for proper phase rotation.

6. Perform each electrical test and visual and mechanical inspection stated in NETA Acceptance Testing Specification. Certify compliance with test parameters.

7. Correct malfunctioning units on-site, where possible, and retest to demonstrate compliance; otherwise, replace with new units and retest.

8. Perform the following infrared (thermo graphic) scan tests and inspections and prepare reports:

a. Initial Infrared Scanning: After Substantial Completion, but not more than 60 days after Final Acceptance, perform an infrared scan of each multi-pole enclosed controller. Remove front panels so joints and connections are accessible to portable scanner.

b. Follow-up Infrared Scanning: Perform an additional follow-up infrared scan of each multi-pole enclosed controller 11 months after date of Substantial Completion.

c. Instruments and Equipment: Use an infrared scanning device designed to measure temperature or to detect significant deviations from normal values. Provide calibration record for device.

9. Test and adjust controls, remote monitoring, and safeties. Replace damaged and malfunctioning controls and equipment.

D. Enclosed controllers will be considered defective if they do not pass tests and inspections.

E. Prepare test and inspection reports including a certified report that identifies enclosed controllers and that describes scanning results. Include notation of deficiencies detected, remedial action taken, and observations after remedial action.

3.06 ADJUSTING

A. Set field-adjustable switches, auxiliary relays, time-delay relays, timers, and overload-relay pickup and trip ranges.

B. Adjust overload-relay heaters or settings if power factor correction capacitors are connected to the load side of the overload relays.

C. Adjust the trip settings of MCPs and thermal-magnetic circuit breakers with adjustable instantaneous trip elements. Initially adjust to six times the motor nameplate full-load ampere ratings and attempt to start motors several times, allowing for motor cool-down between starts. If tripping occurs on motor inrush, adjust settings in increments until motors start without tripping. Do not exceed eight times the motor full-load amperes (or 11 times for NEMA Premium Efficient motors if required). Where these maximum settings do not allow starting of a motor, notify Engineer before increasing settings.

D. Set field-adjustable switches and program microprocessors for required start and stop sequences in reduced-voltage solid-state controllers.

3.07 PROTECTION

A. Temporary Heating: Apply temporary heat to maintain temperature according to manufacturer's written instructions until enclosed controllers are ready to be energized and placed into service.

B. Replace controllers whose interiors have been exposed to water or other liquids prior to Substantial Completion.

3.08 DEMONSTRATION

A. Engage a factory-authorized service representative to train Owner's maintenance personnel to adjust, operate, and maintain enclosed controllers.

END OF SECTION 26 29 13

THIS PAGE WAS LEFT BLANK INTENTIONALLY

26 32 13

ENGINE GENERATORS

PART 1 - GENERAL

1.01 RELATED DOCUMENTS

A. Drawings and general provisions of the Contract, including General and Supplementary Conditions and Division 01 Specification Sections, apply to this Section.

1.02 SUMMARY

A. This Section includes packaged engine-generator sets for emergency power supply with the following features:

1. Gas engine.

2. Unit-mounted cooling system.

3. Unit-mounted and Remote-mounting control and monitoring.

4. Performance requirements for sensitive loads.

5. Outdoor enclosure.

B. Related Sections include the following:

1. Division 26 Section "Transfer Switches" for transfer switches including sensors and relays to initiate automatic-starting and -stopping signals for engine-generator sets.

1.03 DEFINITIONS

A. Retain abbreviation and terms that remain after this Section has been edited.

B. Operational Bandwidth: The total variation from the lowest to highest value of a parameter over the range of conditions indicated, expressed as a percentage of the nominal value of the parameter.

C. LP: Liquid petroleum.

1.04 SUBMITTALS

A. Product Data: For each type of packaged engine generator indicated. Include rated capacities, operating characteristics, and furnished specialties and accessories. In addition, include the following:

1. Thermal damage curve for generator.

2. Time-current characteristic curves for generator protective device.

B. Coordination Drawings: Provide coordination drawings as described in 26 05 00 paragraph 1.03(C).

C. Shop Drawings: Detail equipment assemblies and indicate dimensions, weights, loads, required clearances, method of field assembly, components, and location and size of each field connection.

1. Dimensioned outline plan and elevation drawings of engine-generator set and other components specified.

1. Design Calculations: Signed and sealed by a qualified professional engineer. Calculate requirements for selecting vibration isolators and seismic restraints and for designing vibration isolation bases.

2. Vibration Isolation Base Details: Signed and sealed by a qualified professional engineer. Detail fabrication, including anchorages and attachments to structure and to supported equipment. Include base weights.

3. Wiring Diagrams: Power, signal, and control wiring.

D. Manufacturer Seismic Qualification Certification: Submit certification that engine-generator set, batteries, battery racks, accessories, and components will withstand seismic forces defined in Division 26 Section "Vibration and Seismic Controls for Electrical Systems." Include the following:

1. Basis for Certification: Indicate whether withstand certification is based on actual test of assembled components or on calculation.

a. The term "withstand" means "the unit will remain in place without separation of any parts from the device when subjected to the seismic forces specified and the unit will be fully operational after the seismic event."

2. Dimensioned Outline Drawings of Equipment Unit: Identify center of gravity and locate and describe mounting and anchorage provisions.

3. Detailed description of equipment anchorage devices on which the certification is based and their installation requirements.

E. Qualification Data: For manufacturer.

F. Source quality-control test reports.

1. Certified summary of prototype-unit test report.

1. Certified Test Reports: For components and accessories that are equivalent, but not identical, to those tested on prototype unit.

2. Certified Summary of Performance Tests: Certify compliance with specified requirement to meet performance criteria for sensitive loads.

3. Report of factory test on units to be shipped for this Project, showing evidence of compliance with specified requirements.

4. Report of sound generation.

5. Report of exhaust emissions showing compliance with applicable regulations.

6. Certified Torsional Vibration Compatibility: Comply with NFPA 110.

G. Field quality-control test reports.

H. Operation and Maintenance Data: For packaged engine generators to include in emergency, operation, and maintenance manuals. In addition to items specified in Division 01 Section "Operation and Maintenance Data," include the following:

1. List of tools and replacement items recommended to be stored at Project for ready access. Include part and drawing numbers, current unit prices, and source of supply.

I. Warranty: Special warranty specified in this Section.

1.05 QUALITY ASSURANCE

A. Installer Qualifications: Manufacturer's authorized representative who is trained and approved for installation of units required for this Project.

1. Maintenance Proximity: Not more than four hours' normal travel time from Installer's place of business to Project site.

2. Engineering Responsibility: Preparation of data for vibration isolators and seismic restraints of engine skid mounts, including Shop Drawings, based on testing and engineering analysis of manufacturer's standard units in assemblies similar to those indicated for this Project.

B. Manufacturer Qualifications: A qualified manufacturer. Maintain, within 200 miles of Project site, a service center capable of providing training, parts, and emergency maintenance repairs.

C. Testing Agency Qualifications: An independent agency, with the experience and capability to conduct the testing indicated, that is a member company of the International Electrical Testing Association or is a nationally recognized testing laboratory (NRTL), and that is acceptable to authorities having jurisdiction.

1. Testing Agency's Field Supervisor: Person currently certified by the International Electrical Testing Association or the National Institute for Certification in Engineering Technologies to supervise on-site testing specified in Part 3.

D. Source Limitations: Obtain packaged generator sets and auxiliary components through one source from a single manufacturer.

E. Electrical Components, Devices, and Accessories: Listed and labeled as defined in NFPA 70, Article 100, by a testing agency acceptable to authorities having jurisdiction, and marked for intended use.

F. Comply with ASME B15.1.

G. Comply with NFPA 37.

H. Comply with NFPA 70.

I. Comply with NFPA 99.

J. Comply with NFPA 110 requirements for Level 1 emergency power supply system.

K. Comply with UL 2200.

L. Engine Exhaust Emissions: Comply with applicable state and local government requirements.

M. Noise Emission: Comply with applicable state and local government requirements for maximum noise level at adjacent property boundaries due to sound emitted by generator set including engine, engine exhaust, engine cooling-air intake and discharge, and other components of installation.

1.06 PROJECT CONDITIONS

A. Interruption of Existing Electrical Service: Do not interrupt electrical service to facilities occupied by Owner or others unless permitted under the following conditions and then only after arranging to provide temporary electrical service according to requirements indicated:

1. Notify Owner no fewer than two days in advance of proposed interruption of electrical service.

2. Do not proceed with interruption of electrical service without Owner's written permission.

B. Environmental Conditions: Engine-generator system shall withstand the following environmental conditions without mechanical or electrical damage or degradation of performance capability:

1. Ambient Temperature: 5 to 40 deg C.

2. Relative Humidity: 0 to 95 percent.

3. Altitude: Sea level to 1000 feet.

2.02 COORDINATION

A. Coordinate size and location of concrete bases for package engine generators. Cast anchor-bolt inserts into bases. Concrete, reinforcement, and formwork requirements are specified in Division 03.

B. Coordinate size and location of roof curbs, equipment supports, and roof penetrations for remote radiators. These items are specified in Division 07 Section "Roof Accessories."

2.03 WARRANTY

A. Special Warranty: Manufacturer's standard form in which manufacturer agrees to repair or replace components of packaged engine generators and associated auxiliary components that fail in materials or workmanship within specified warranty period.

Warranty Period: 5 years from date of Substantial Completion.

2.04 MAINTENANCE SERVICE

A. Initial Maintenance Service: Beginning at Substantial Completion, provide 12 months' full maintenance by skilled employees of manufacturer's designated service organization. Include quarterly exercising to check for proper starting, load transfer, and running under load. Include routine preventive maintenance as recommended by manufacturer and adjusting as required for proper operation. Provide parts and supplies same as those used in the manufacture and installation of original equipment.

2.05 EXTRA MATERIALS

A. Furnish extra materials described below that match products installed and that are packaged with protective covering for storage and identified with labels describing contents.

1. Fuses: One for every 10 of each type and rating, but no fewer than one of each.

2. Indicator Lamps: Two for every six of each type used, but no fewer than two of each.

3. Filters: One set each of lubricating oil, fuel, and combustion-air filters.

PART 3 - PRODUCTS

3.01 MANUFACTURERS

A. Available Manufacturers: Subject to compliance with requirements, manufacturers offering products that may be incorporated into the Work include, are limited to the following:

1. Cummins

2. Caterpillar

3. Kohler

3.02 ENGINE-GENERATOR SET

A. Factory-assembled and -tested, engine-generator set.

B. Mounting Frame: Maintain alignment of mounted components without depending on concrete foundation; and have lifting attachments.

1. Rigging Diagram: Inscribed on metal plate permanently attached to mounting frame to indicate location and lifting capacity of each lifting attachment and generator-set center of gravity.

C. Capacities and Characteristics:

1. Power Output Ratings: Nominal ratings as indicated.

1. Output Connections: Three-phase, four wire.

2. Nameplates: For each major system component to identify manufacturer's name and address, and model and serial number of component.

3. Generators shall be designed with a 72 hour running capacity.

D. Generator-Set Performance:

1. Steady-State Voltage Operational Bandwidth: 3 percent of rated output voltage from no load to full load.

1. Transient Voltage Performance: Not more than 20 percent variation for 50 percent step-load increase or decrease. Voltage shall recover and remain within the steady-state operating band within three seconds.

2. Steady-State Frequency Operational Bandwidth: 0.5 percent of rated frequency from no load to full load.

3. Steady-State Frequency Stability: When system is operating at any constant load within the rated load, there shall be no random speed variations outside the steady-state operational band and no hunting or surging of speed.

4. Transient Frequency Performance: Less than 5 percent variation for 50 percent step-load increase or decrease. Frequency shall recover and remain within the steady-state operating band within five seconds.

5. Output Waveform: At no load, harmonic content measured line to line or line to neutral shall not exceed 5 percent total and 3 percent for single harmonics. Telephone influence factor, determined according to NEMA MG 1, shall not exceed 50 percent.

6. Sustained Short-Circuit Current: For a 3-phase, bolted short circuit at system output terminals, system shall supply a minimum of 250 percent of rated full-load current for not less than 10 seconds and then clear the fault automatically, without damage to generator system components.

7. Start Time: Comply with NFPA 110, Type 10, system requirements.

E. Generator-Set Performance for Sensitive Loads:

1. Oversizing generator compared with the rated power output of the engine is permissible to meet specified performance.

   a. Nameplate Data for Oversized Generator: Show ratings required by the Contract Documents rather than ratings that would normally be applied to generator size installed.

2. Steady-State Voltage Operational Bandwidth: 1 percent of rated output voltage from no load to full load.

3. Transient Voltage Performance: Not more than 10 percent variation for 50 percent step-load increase or decrease. Voltage shall recover and remain within the steady-state operating band within 0.5 second.

4. Steady-State Frequency Operational Bandwidth: Plus or minus 0.25 percent of rated frequency from no load to full load.

5. Steady-State Frequency Stability: When system is operating at any constant load within the rated load, there shall be no random speed variations outside the steady-state operational band and no hunting or surging of speed.

6. Transient Frequency Performance: Less than 2-Hz variation for 50 percent step-load increase or decrease. Frequency shall recover and remain within the steady-state operating band within three seconds.

7. Output Waveform: At no load, harmonic content measured line to neutral shall not exceed 2 percent total with no slot ripple. Telephone influence factor, determined according to NEMA MG 1, shall not exceed 50 percent.

8. Sustained Short-Circuit Current: For a 3-phase, bolted short circuit at system output terminals, system shall supply a minimum of 300 percent of rated full-load current for not less than 10 seconds and then clear the fault automatically, without damage to winding insulation or other generator system components.

9. Excitation System: Performance shall be unaffected by voltage distortion caused by nonlinear load.

   a. Provide permanent magnet excitation for power source to voltage regulator.

10. Start Time: Comply with NFPA 110, Type 10, system requirements.

3.03 ENGINE

A. Depending on NFPA 110 class and local codes, LP-gas standby may not be required for natural gas-fueled systems. Verify requirements with authorities having jurisdiction.

B. Fuel: Natural gas with automatic LP-gas standby.

C. Rated Engine Speed: 1800 rpm.

D. Maximum Piston Speed for Four-Cycle Engines: 2250 fpm.

E. Lubrication System: The following items are mounted on engine or skid:

1. Filter and Strainer: Rated to remove 90 percent of particles 5 micrometers and smaller while passing full flow.

2. Thermostatic Control Valve: Control flow in system to maintain optimum oil temperature. Unit shall be capable of full flow and is designed to be fail-safe.

3. Crankcase Drain: Arranged for complete gravity drainage to an easily removable container with no disassembly and without use of pumps, siphons, special tools, or appliances.

F. Engine Fuel System:

1. Main Fuel Pump: Mounted on engine. Pump ensures adequate primary fuel flow under starting and load conditions.

1. Relief-Bypass Valve: Automatically regulates pressure in fuel line and returns excess fuel to source.

2. Dual Natural Gas with LP-Gas Backup (Vapor-Withdrawal) System:

a. Carburetor.

b. Secondary Gas Regulators: One for each fuel type.

c. Fuel-Shutoff Solenoid Valves: One for each fuel source.

d. Flexible Fuel Connectors: One for each fuel source.

G. Coolant Jacket Heater: Electric-immersion type, factory installed in coolant jacket system. Comply with NFPA 110 requirements for Level 1 equipment for heater capacity.

H. Governor: Adjustable isochronous, with speed sensing.

I. Cooling System: Closed loop, liquid cooled, with radiator factory mounted on engine-generator-set mounting frame and integral engine-driven coolant pump.

1. Coolant: Solution of 50 percent ethylene-glycol-based antifreeze and 50 percent water, with anticorrosion additives as recommended by engine manufacturer.

1. Size of Radiator: Adequate to contain expansion of total system coolant from cold start to 110 percent load condition.

2. Expansion Tank: Constructed of welded steel plate and rated to withstand maximum closed-loop coolant system pressure for engine used. Equip with gage glass and petcock.

3. Temperature Control: Self-contained, thermostatic-control valve modulates coolant flow automatically to maintain optimum constant coolant temperature as recommended by engine manufacturer.

4. Coolant Hose: Flexible assembly with inside surface of nonporous rubber and outer covering of aging-, ultraviolet-, and abrasion-resistant fabric.

   a. Rating: 50-psig maximum working pressure with coolant at 180 deg F, and non-collapsible under vacuum.

   b. End Fittings: Flanges or steel pipe nipples with clamps to suit piping and equipment connections.

J. Cooling System: Closed loop, liquid cooled, with remote radiator and integral engine-driven coolant pump.

1. Configuration: Vertical air discharge.

1. Radiator Core Tubes: Aluminum.

2. Size of Radiator: Adequate to contain expansion of total system coolant from cold start to 110 percent load condition.

3. Expansion Tank: Constructed of welded steel plate and rated to withstand maximum closed-loop coolant system pressure for engine used. Equip with gage glass and petcock.

4. Fan: Driven by totally enclosed electric motor with sealed bearings.

5. Coolant: Solution of 50 percent ethylene-glycol-based antifreeze and 50 percent water, with anticorrosion additives as recommended by engine manufacturer.

6. Temperature Control: Self-contained, thermostatic-control valve modulates coolant flow automatically to maintain optimum constant coolant temperature as recommended by engine manufacturer.

K. Muffler/Silencer: Critical type, sized as recommended by engine manufacturer and selected with exhaust piping system to not exceed engine manufacturer's engine backpressure requirements.

1. Minimum sound attenuation of 25 dB at 500 Hz.

1. Sound level measured at a distance of 10 feet from exhaust discharge after installation is complete shall be 85 dBA or less.

L. Air-Intake Filter: Standard-duty, engine-mounted air cleaner with replaceable dry-filter element and "blocked filter" indicator.

M. Select first option in paragraph below for smaller engine-generator sets. Retain second option for units 175 kW and larger.

N. Starting System: 24-V electric, with negative ground.

1. Components: Sized so they will not be damaged during a full engine-cranking cycle with ambient temperature at maximum specified in Part 1 "Project Conditions" Article.

1. Cranking Motor: Heavy-duty unit that automatically engages and releases from engine flywheel without binding.

2. Cranking Cycle: As required by NFPA 110 for system level specified.

3. Battery: Adequate capacity within ambient temperature range specified in Part 1 "Project Conditions" Article to provide specified cranking cycle at least twice without recharging.

4. Battery Cable: Size as recommended by engine manufacturer for cable length indicated. Include required interconnecting conductors and connection accessories.

5. Battery Compartment: Factory fabricated of metal with acid-resistant finish and thermal insulation. Thermostatically controlled heater shall be arranged to maintain battery above 10 deg C regardless of external ambient temperature within range specified in Part 1 "Project Conditions" Article. Include accessories required to support and fasten batteries in place.

6. Battery-Charging Alternator: Factory mounted on engine with solid-state voltage regulation and 35-A minimum continuous rating.

7. Battery Charger: Current-limiting, automatic-equalizing and float-charging type. Unit shall comply with UL 1236 and include the following features:

   a. Operation: Equalizing-charging rate of 10 A shall be initiated automatically after battery has lost charge until an adjustable equalizing voltage is achieved at battery terminals. Unit shall then be automatically switched to a lower float-charging mode and shall continue to operate in that mode until battery is discharged again.

   b. Automatic Temperature Compensation: Adjust float and equalize voltages for variations in ambient temperature from minus 40 deg C to plus 60 deg C to prevent overcharging at high temperatures and undercharging at low temperatures.

   c. Automatic Voltage Regulation: Maintain constant output voltage regardless of input voltage variations up to plus or minus 10 percent.

   d. Ammeter and Voltmeter: Flush mounted in door. Meters shall indicate charging rates.

   e. Safety Functions: Sense abnormally low battery voltage and close contacts providing low battery voltage indication on control and monitoring panel. Sense high battery voltage and loss of ac input or dc output of battery charger. Either condition shall close contacts that provide a battery-charger malfunction indication at system control and monitoring panel.

   f. Enclosure and Mounting: NEMA 250, Type 1, wall-mounted cabinet.

3.04 CONTROL AND MONITORING

A. This Article specifies the subsystem that monitors, protects, and controls the engine generator. See Editing Instruction No. 8 in the Evaluations.

B. Retain first paragraph below for automatically starting systems; retain second paragraph for manually starting systems.

C. Automatic Starting System Sequence of Operation: When mode-selector switch on the control and monitoring panel is in the automatic position, remote-control contacts in one or more separate automatic transfer switches initiate starting and stopping of generator set. When mode-selector switch is switched to the on position, generator set starts. The off position of same switch initiates generator-set shutdown. When generator set is running, specified system or equipment failures or derangements automatically shut down generator set and initiate alarms. Operation of a remote emergency-stop switch also shuts down generator set.

D. Manual Starting System Sequence of Operation: Switching on-off switch on the generator control panel to the on position starts generator set. The off position of same switch initiates generator-set shutdown. When generator set is running, specified system or equipment failures or derangements automatically shut down generator set and initiate alarms. Operation of a remote emergency-stop switch also shuts down generator set.

E. Retain one of three paragraphs below to describe control and monitoring unit configuration. Coordinate retained paragraph with Drawings. Retain first paragraph unless special requirements justify significant extra cost of one of the other two configurations. See Evaluations.

F. Configuration: Operating and safety indications, protective devices, basic system controls, and engine gages shall be grouped in a common control and monitoring panel mounted on the generator set. Mounting method shall isolate the control panel from generator-set vibration.

G. Configuration: Operating and safety indications, protective devices, basic system controls, and engine gages shall be grouped in a common wall-mounted control and monitoring panel.

H. Configuration: Operating and safety indications, protective devices, basic system controls, engine gages, instrument transformers, generator disconnect switch or circuit breaker, and other indicated components shall be grouped in a combination control and power panel. Control and monitoring section of panel shall be isolated from power sections by steel barriers. Panel features shall include the following:

1. Wall-Mounting Cabinet Construction: Rigid, self-supporting steel unit complying with NEMA ICS 6. Power bus shall be copper. Bus, bus supports, control wiring, and temperature rise shall comply with UL 891.

2. Switchboard Construction: Freestanding unit complying with Division 26 Section "Switchboards."

3. Switchgear Construction: Freestanding unit complying with Division 26 Section "Low-Voltage Switchgear."

4. Current and Potential Transformers: Instrument accuracy class.

5. Indicating and Protective Devices and Controls: As required by NFPA 110 for Level 1 system, and the following:

AC voltmeter.

6. AC ammeter.

7. AC frequency meter.

8. DC voltmeter (alternator battery charging).

9. Engine-coolant temperature gage.

10. Engine lubricating-oil pressure gage.

11. Running-time meter.

12. Ammeter-voltmeter, phase-selector switch(es).

13. Generator-voltage adjusting rheostat.

14. Fuel tank derangement alarm.

15. Fuel tank high-level shutdown of fuel supply alarm.

16. Generator overload.

I. Indicating and Protective Devices and Controls:

1. AC voltmeter.

1. AC ammeter.

2. AC frequency meter.

3. DC voltmeter (alternator battery charging).

4. Engine-coolant temperature gage.

5. Engine lubricating-oil pressure gage.

6. Running-time meter.

7. Ammeter-voltmeter, phase-selector switch(es).

8. Generator-voltage adjusting rheostat.

9. Coordinate five subparagraphs below with Drawings. See Evaluations for typical local and remote alarm indications and shutdowns.

10. Start-stop switch.

11. Overspeed shutdown device.

12. Coolant high-temperature shutdown device.

13. Coolant low-level shutdown device.

14. Oil low-pressure shutdown device.

15. Two subparagraphs below are optional devices.

16. Fuel tank derangement alarm.

17. Fuel tank high-level shutdown of fuel supply alarm.

18. Generator overload.

J. Supporting Items: Include sensors, transducers, terminals, relays, and other devices and include wiring required to support specified items. Locate sensors and other supporting items on engine or generator, unless otherwise indicated.

K. Connection to Data Link: A separate terminal block, factory wired to Form C dry contacts, for each alarm and status indication is reserved for connections for data-link transmission of indications to remote data terminals. Data system connections to terminals are covered in Division 26 Section "Electrical Power Monitoring and Control."

L. Common Remote Audible Alarm: Comply with NFPA 110 requirements for Level 1 systems. Include necessary contacts and terminals in control and monitoring panel.

1. Overcrank shutdown.

1. Coolant low-temperature alarm.

2. Control switch not in auto position.

3. Battery-charger malfunction alarm.

4. Battery low-voltage alarm.

M. Common Remote Audible Alarm: Signal the occurrence of any events listed below without differentiating between event types. Connect so that after an alarm is silenced, clearing of initiating condition will reactivate alarm until silencing switch is reset.

1. Engine high-temperature shutdown.

1. Lube-oil, low-pressure shutdown.

2. Overspeed shutdown.

3. Remote emergency-stop shutdown.

4. Engine high-temperature pre-alarm.

5. Lube-oil, low-pressure pre-alarm.

6. Fuel tank, low-fuel level.

7. Low coolant level.

N. Remote Alarm Annunciator: Comply with NFPA 99. An LED labeled with proper alarm conditions shall identify each alarm event and a common audible signal shall sound for each alarm condition. Silencing switch in face of panel shall silence signal without altering visual indication. Connect so that after an alarm is silenced, clearing of initiating condition will reactivate alarm until silencing switch is reset. Cabinet and faceplate are surface- or flush-mounting type to suit mounting conditions indicated.

O. Remote Emergency-Stop Switch: Flush; wall mounted, unless otherwise indicated; and labeled. Push button shall be protected from accidental operation.

3.05 GENERATOR OVERCURRENT AND FAULT PROTECTION

A. Generator Circuit Breaker: Insulated-case, electronic-trip type; 100 percent rated; complying with UL 489.

1. Tripping Characteristics: Adjustable long-time and short-time delay and instantaneous.

1. Trip Settings: Selected to coordinate with generator thermal damage curve.

2. Shunt Trip: Connected to trip breaker when generator set is shut down by other protective devices.

3. Mounting: Adjacent to or integrated with control and monitoring panel.

B. Generator Disconnect Switch: Molded-case type, 100 percent rated.

1. Rating: Matched to generator output rating.

1. Shunt Trip: Connected to trip switch when signaled by generator protector or by other protective devices.

C. Generator Protector: Microprocessor-based unit shall continuously monitor current level in each phase of generator output, integrate generator heating effect over time, and predict when thermal damage of alternator will occur. When signaled by generator protector or other generator-set protective devices, a shunt-trip device in the generator disconnect switch shall open the switch to disconnect the generator from load circuits. Protector shall perform the following functions:

1. Initiates a generator overload alarm when generator has operated at an overload equivalent to 110 percent of full-rated load for 60 seconds. Indication for this alarm is integrated with other generator-set malfunction alarms.

1. Under single or three-phase fault conditions, regulates generator to 300 percent of rated full-load current for up to 10 seconds.

2. As overcurrent heating effect on the generator approaches the thermal damage point of the unit, protector switches the excitation system off, opens the generator disconnect device, and shuts down the generator set.

3. Senses clearing of a fault by other overcurrent devices and controls recovery of rated voltage to avoid overshoot.

D. Ground-Fault Indication: Comply with NFPA 70, "Emergency System" signals for ground-fault. Integrate ground-fault alarm indication with other generator-set alarm indications.

3.06 GENERATOR, EXCITER, AND VOLTAGE REGULATOR

A. Comply with NEMA MG 1.

B. Drive: Generator shaft shall be directly connected to engine shaft. Exciter shall be rotated integrally with generator rotor.

C. Electrical Insulation: Class H or Class F.

D. Stator-Winding Leads: Brought out to terminal box to permit future reconnection for other voltages if required.

E. Construction shall prevent mechanical, electrical, and thermal damage due to vibration, overspeed up to 125 percent of rating, and heat during operation at 110 percent of rated capacity.

F. Enclosure: Drip proof.

G. Delete first paragraph below if instrument transformers are housed in control and power panel.

H. Instrument Transformers: Mounted within generator enclosure.

I. Voltage Regulator: Solid-state type, separate from exciter, providing performance as specified.

1. Adjusting rheostat on control and monitoring panel shall provide plus or minus 5 percent adjustment of output-voltage operating band.

J. Strip Heater: Thermostatically controlled unit arranged to maintain stator windings above dew point.

K. Windings: Two-thirds pitch stator winding and fully linked amortisseur winding.

L. Subtransient Reactance: 12 percent, maximum.

3.07 OUTDOOR GENERATOR-SET ENCLOSURE

A. Description: Level II sound resistant, Vandal-resistant, weatherproof steel housing, wind resistant up to 139 mph. Multiple panels shall be lockable and provide adequate access to components requiring maintenance. Panels shall be removable by one person without tools. Instruments and control shall be mounted within enclosure.

B. Description: Prefabricated or pre-engineered walk-in enclosure with the following features:

1. Construction: Galvanized-steel, metal-clad, integral structural-steel-framed building erected on concrete foundation.

2. Structural Design and Anchorage: Comply with ASCE 7 for wind loads.

3. Space Heater: Thermostatically controlled and sized to prevent condensation.

4. Louvers: Equipped with bird screen and filter arranged to permit air circulation when engine is not running while excluding exterior dust, birds, and rodents.

5. Hinged Doors: With padlocking provisions.

6. Ventilation: Louvers equipped with bird screen and filter arranged to permit air circulation while excluding exterior dust, birds, and rodents.

7. Thermal Insulation: Manufacturer's standard materials and thickness selected in coordination with space heater to maintain winter interior temperature within operating limits required by engine-generator-set components.

8. Muffler Location: Within enclosure.

C. Engine Cooling Airflow through Enclosure: Maintain temperature rise of system components within required limits when unit operates at 110 percent of rated load for 2 hours with ambient temperature at top of range specified in system service conditions.

1. Louvers: Fixed-engine, cooling-air inlet and discharge. Storm-proof and drainable louvers prevent entry of rain and snow.

1. Automatic Dampers: At engine cooling-air inlet and discharge. Dampers shall be closed to reduce enclosure heat loss in cold weather when unit is not operating.

D. Interior Lights with Switch: Factory-wired, vaporproof-type fixtures within housing; arranged to illuminate controls and accessible interior. Arrange for external electrical connection.

1. AC lighting system and connection point for operation when remote source is available.

1. DC lighting system for operation when remote source and generator are both unavailable.

E. Convenience Outlets: Factory wired, GFCI. Arrange for external electrical connection.

3.08 MOTORS

A. General requirements for motors are specified in Division 23 Section "Common Motor Requirements for HVAC Equipment."

1. Motor Sizes: Minimum size as indicated. If not indicated, large enough so driven load will not require motor to operate in service factor range above 1.0.

2. Controllers, Electrical Devices, and Wiring: Electrical devices and connections are specified in Division 26 Sections.

3.09 VIBRATION ISOLATION DEVICES

A. Elastomeric Isolator Pads: Oil- and water-resistant elastomer or natural rubber, arranged in single or multiple layers, molded with a nonslip pattern and galvanized-steel baseplates of sufficient stiffness for uniform loading over pad area, and factory cut to sizes that match requirements of supported equipment.

1. Material: Standard neoprene.

B. Restrained Spring Isolators: Freestanding, steel, open-spring isolators with seismic restraint.

1. Housing: Steel with resilient vertical-limit stops to prevent spring extension due to wind loads or if weight is removed; factory-drilled baseplate bonded to 1/4-inch thick, elastomeric isolator pad attached to baseplate underside; and adjustable equipment mounting and leveling bolt that acts as blocking during installation.

1. Outside Spring Diameter: Not less than 80 percent of compressed height of the spring at rated load.

2. Minimum Additional Travel: 50 percent of required deflection at rated load.

3. Lateral Stiffness: More than 80 percent of rated vertical stiffness.

4. Overload Capacity: Support 200 percent of rated load, fully compressed, without deformation or failure.

3.10 FINISHES

A. Indoor and Outdoor Enclosures and Components: Manufacturer's standard finish over corrosion-resistant pretreatment and compatible primer.

3.11 SOURCE QUALITY CONTROL

A. Prototype Testing: Factory test engine-generator set using same engine model, constructed of identical or equivalent components and equipped with identical or equivalent accessories.

1. Tests: Comply with NFPA 110, Level 1 Energy Converters and with IEEE 115.

B. Project-Specific Equipment Tests: Before shipment, factory test engine-generator set and other system components and accessories manufactured specifically for this Project. Perform tests at rated load and power factor. Include the following tests:

1. Test components and accessories furnished with installed unit that are not identical to those on tested prototype to demonstrate compatibility and reliability.

1. Full load run.

2. Maximum power.

3. Voltage regulation.

4. Transient and steady-state governing.

5. Single-step load pickup.

6. Safety shutdown.

7. Provide 14 days' advance notice of tests and opportunity for observation of tests by Owner's representative.

8. Report factory test results within 10 days of completion of test.

PART 4 - EXECUTION

4.01 EXAMINATION

A. Examine areas, equipment bases, and conditions, with Installer present, for compliance with requirements for installation and other conditions affecting packaged engine-generator performance.

B. Examine roughing-in of piping systems and electrical connections. Verify actual locations of connections before packaged engine-generator installation.

C. Proceed with installation only after unsatisfactory conditions have been corrected.

4.02 INSTALLATION

A. Comply with packaged engine-generator manufacturers' written installation and alignment instructions and with NFPA 110.

B. Install packaged engine generator to provide access, without removing connections or accessories, for periodic maintenance.

C. Install packaged engine generator with restrained spring isolators having a minimum deflection of 1 inch on 4-inch high concrete base. Secure sets to anchor bolts installed in concrete bases. Concrete base construction is specified in Division 26 Section "Vibration and Seismic Controls for Electrical Systems."

D. Install Schedule 40, black steel piping with welded joints and connect to engine muffler. Install thimble at wall. Piping shall be same diameter as muffler outlet. Flexible connectors and steel piping materials and installation requirements are specified in Division 23 Section "Hydronic Piping."

1. Install condensate drain piping to muffler drain outlet full size of drain connection with a shutoff valve, stainless-steel flexible connector, and Schedule 40, black steel pipe with welded joints. Flexible connectors and piping materials and installation requirements are specified in Division 23 Section "Hydronic Piping."

E. Electrical Wiring: Install electrical devices furnished by equipment manufacturers but not specified to be factory mounted.

F. The location of the emergency power generator shall be away from fresh air intakes and other areas where fumes may enter the building.

4.03 CONNECTIONS

A. Piping installation requirements are specified in Division 23 Sections. Drawings indicate general arrangement of piping and specialties.

B. Connect fuel, cooling-system, and exhaust-system piping adjacent to packaged engine generator to allow service and maintenance.

C. Connect engine exhaust pipe to engine with flexible connector.

D. Connect fuel piping to engines with a gate valve and union and flexible connector.

1. Natural-gas piping, valves, and specialties for gas distribution are specified in Division 23 Section "Facility Natural-Gas Piping."

2. LP-gas piping, valves, and specialties for gas piping are specified in Division 23 Section "Facility Liquefied-Petroleum Gas Piping."

E. Ground equipment according to Division 26 Section "Grounding and Bonding for Electrical Systems."

F. Connect wiring according to Division 26 Section "Low-Voltage Electrical Power Conductors and Cables."

G. The following equipment shall be connected to the generator: fire alarm system, PA system, security system, kitchen freezers and coolers, gym light fixtures, energy management system, server room, A/C for server room, select administrative office receptacles, elevators, auditorium egress lighting, emergency lights, and select light fixtures. One 110v double duplex receptacle and one overhead light in each mechanical room, electrical room, and data closet shall be connected to the generator

4.04 IDENTIFICATION

A. Identify system components according to Division 23 Section "Identification for HVAC Piping and Equipment" and Division 26 Section "Identification for Electrical Systems."

4.05 FIELD QUALITY CONTROL

A. Testing Agency: Engage a qualified testing agency to perform tests and inspections and prepare test reports.

B. Manufacturer's Field Service: Engage a factory-authorized service representative to inspect, test, and adjust components, assemblies, and equipment installations, including connections. Report results in writing.

C. Perform tests and inspections and prepare test reports.

D. Manufacturer's Field Service: Engage a factory-authorized service representative to inspect components, assemblies, and equipment installations, including connections, and to assist in testing.

E. Tests and Inspections:

1. Perform tests recommended by manufacturer and each electrical test and visual and mechanical inspection for "AC Generators and for Emergency Systems" specified in NETA Acceptance Testing Specification. Certify compliance with test parameters.

2. NFPA 110 Acceptance Tests: Perform tests required by NFPA 110 that are additional to those specified here including, but not limited to, single-step full-load pickup test.

3. Battery Tests: Equalize charging of battery cells according to manufacturer's written instructions. Record individual cell voltages.

a. Measure charging voltage and voltages between available battery terminals for full-charging and float-charging conditions. Check electrolyte level and specific gravity under both conditions.

b. Test for contact integrity of all connectors. Perform an integrity load test and a capacity load test for the battery.

c. Verify acceptance of charge for each element of the battery after discharge.

4. Verify that measurements are within manufacturer's specifications.

5. Battery-Charger Tests: Verify specified rates of charge for both equalizing and float-charging conditions.

6. System Integrity Tests: Methodically verify proper installation, connection, and integrity of each element of engine-generator system before and during system operation. Check for air, exhaust, and fluid leaks.

7. Exhaust-System Back-Pressure Test: Use a manometer with a scale exceeding 40-inch wg. Connect to exhaust line close to engine exhaust manifold. Verify that back pressure at full-rated load is within manufacturer's written allowable limits for the engine.

8. Exhaust Emissions Test: Comply with applicable government test criteria.

9. Voltage and Frequency Transient Stability Tests: Use recording oscilloscope to measure voltage and frequency transients for 50 and 100 percent step-load increases and decreases and verify that performance is as specified.

10. Harmonic-Content Tests: Measure harmonic content of output voltage under 25 percent and at 100 percent of rated linear load. Verify that harmonic content is within specified limits.

11. Noise Level Tests: Measure A-weighted level of noise emanating from generator-set installation, including engine exhaust and cooling-air intake and discharge, at four locations on the property line, and compare measured levels with required values.

F. Coordinate tests with tests for transfer switches and run them concurrently.

G. Test instruments shall have been calibrated within the last 12 months, traceable to standards of NIST, and adequate for making positive observation of test results. Make calibration records available for examination on request.

H. Leak Test: After installation, charge system and test for leaks. Repair leaks and retest until no leaks exist.

I. Operational Test: After electrical circuitry has been energized, start units to confirm proper motor rotation and unit operation.

J. Test and adjust controls and safeties. Replace damaged and malfunctioning controls and equipment.

K. Remove and replace malfunctioning units and retest as specified above.

L. Retest: Correct deficiencies identified by tests and observations and retest until specified requirements are met.

M. Report results of tests and inspections in writing. Record adjustable relay settings and measured insulation resistances, time delays, and other values and observations. Attach a label or tag to each tested component indicating satisfactory completion of tests.

N. Infrared Scanning: After Substantial Completion, but not more than 60 days after Final Acceptance, perform an infrared scan of each power wiring termination and each bus connection. Remove all access panels so terminations and connections are accessible to portable scanner.

1. Follow-up Infrared Scanning: Perform an additional follow-up infrared scan 11 months after date of Substantial Completion.

1. Instrument: Use an infrared scanning device designed to measure temperature or to detect significant deviations from normal values. Provide calibration record for device.

2. Record of Infrared Scanning: Prepare a certified report that identifies terminations and connections checked and that describes scanning results. Include notation of deficiencies detected, remedial action taken, and observations after remedial action.

4.06 DEMONSTRATION

A. Engage a factory-authorized service representative to train Owner's maintenance personnel to adjust, operate, and maintain packaged engine generators. Refer to Division 01 Section "Demonstration and Training."

END OF SECTION 26 32 13

26 36 00

TRANSFER SWITCHES

1.01 RELATED DOCUMENTS

A. Drawings and general provisions of the Contract, including General and Supplementary Conditions and Division 01 Specification Sections, apply to this Section.

1.02 SUMMARY

A. This Section includes transfer switches rated 600 V and less, including the following:

1. Automatic transfer switches.

2. Bypass/isolation switches.

3. Remote annunciation systems.

B. Related Sections include the following:

1. Division 21 Section "Electric-Drive, Centrifugal Fire Pumps" for automatic transfer switches for fire pumps.

2. Division 21 Section "Electric-Drive, Vertical-Turbine Fire Pumps" for automatic transfer switches for fire pumps.

1.03 SUBMITTALS

A. Product Data: For each type of product indicated. Include rated capacities, weights, operating characteristics, furnished specialties, and accessories.

B. Coordination Drawings: Provide coordination drawings as described in 26 05 00 paragraph 1.03(C).

C. Shop Drawings: Dimensioned plans, elevations, sections, and details showing minimum clearances, conductor entry provisions, gutter space, installed features and devices, and material lists for each switch specified.

1. Single-Line Diagram: Show connections between transfer switch, bypass/isolation switch, power sources, and load; and show interlocking provisions for each combined transfer switch and bypass/isolation switch.

2. Retain paragraph and subparagraphs below if required by seismic criteria applicable to Project. Coordinate with Division 26 Section "Vibration and Seismic Controls for Electrical Systems."

3. Dimensioned Outline Drawings of Equipment Unit: Identify center of gravity and locate and describe mounting and anchorage provisions.

4. Detailed description of equipment anchorage devices on which the certification is based and their installation requirements.

D. Qualification Data: For manufacturer.

E. Field quality-control test reports.

F. Operation and Maintenance Data: For each type of product to include in emergency, operation, and maintenance manuals. In addition to items specified in Division 01 Section "Operation and Maintenance Data," include the following:

1. Features and operating sequences, both automatic and manual.

2. List of all factory settings of relays; provide relay-setting and calibration instructions, including software, where applicable.

1.04 QUALITY ASSURANCE

A. Manufacturer Qualifications: Maintain a service center capable of providing training, parts, and emergency maintenance repairs within a response period of less than eight hours from time of notification.

B. Testing Agency Qualifications: An independent agency, with the experience and capability to conduct the testing indicated, that is a member company of the InterNational Electrical Testing Association or is a nationally recognized testing laboratory (NRTL) as defined by OSHA in 29 CFR 1910.7, and that is acceptable to authorities having jurisdiction.

1. Testing Agency's Field Supervisor: Person currently certified by the InterNational Electrical Testing Association or the National Institute for Certification in Engineering Technologies to supervise on-site testing specified in Part 3.

C. Source Limitations: Obtain automatic transfer switches through one source from a single manufacturer.

D. Electrical Components, Devices, and Accessories: Listed and labeled as defined in NFPA 70, Article 100, by a testing agency acceptable to authorities having jurisdiction, and marked for intended use.

E. Comply with NEMA ICS 1.

F. Comply with NFPA 70.

G. Comply with NFPA 99.

H. Comply with NFPA 110.

I. Comply with UL 1008 unless requirements of these Specifications are stricter.

1.05 PROJECT CONDITIONS

A. Interruption of Existing Electrical Service: Do not interrupt electrical service to facilities occupied by Owner or others unless permitted under the following conditions and then only after arranging to provide temporary electrical service:

1. Notify Owner no fewer than two days in advance of proposed interruption of electrical service.

2. Do not proceed with interruption of electrical service without Owner's written permission.

1.06 COORDINATION

A. Coordinate size and location of concrete bases. Cast anchor-bolt inserts into bases. Concrete, reinforcement, and formwork requirements are specified in Division 03.

PART 2 - PRODUCTS

2.01 MANUFACTURERS

A. Available Manufacturers: Subject to compliance with requirements, manufacturers offering products that may be incorporated into the Work include, but are not limited to, the following:

B. Manufacturers: Subject to compliance with requirements, provide products by one of the following:

1. Transfer Switches Using Molded-Case Switches or Circuit Breakers:

a. ASCO

b. Caterpillar

c. Cummins Power Generation

d. Kohler

2.02 GENERAL TRANSFER-SWITCH PRODUCT REQUIREMENTS

A. Indicated Current Ratings: Apply as defined in UL 1008 for continuous loading and total system transfer, including tungsten filament lamp loads not exceeding 30 percent of switch ampere rating, unless otherwise indicated.

B. Tested Fault-Current Closing and Withstand Ratings: Adequate for duty imposed by protective devices at installation locations in Project under the fault conditions indicated, based on testing according to UL 1008.

1. Where transfer switch includes internal fault-current protection, rating of switch and trip unit combination shall exceed indicated fault-current value at installation location.

C. Solid-State Controls: Repetitive accuracy of all settings shall be plus or minus 2 percent or better over an operating temperature range of minus 20 to plus 70 deg C.

D. Resistance to Damage by Voltage Transients: Components shall meet or exceed voltage-surge withstand capability requirements when tested according to IEEE C62.41. Components shall meet or exceed voltage-impulse withstand test of NEMA ICS 1.

E. Electrical Operation: Accomplish by a non-fused, momentarily energized solenoid or electric-motor-operated mechanism, mechanically and electrically interlocked in both directions.

F. Switch Characteristics: Designed for continuous-duty repetitive transfer of full-rated current between active power sources.

1. Limitation: Switches using molded-case switches or circuit breakers or insulated-case circuit-breaker components are not acceptable.

2. Switch Action: Double throw; mechanically held in both directions.

3. Contacts: Silver composition or silver alloy for load-current switching. Conventional automatic transfer-switch units, rated 225 A and higher, shall have separate arcing contacts.

G. Neutral Switching. Where four-pole switches are indicated, provide overlapping neutral contacts.

H. Neutral Terminal: Solid and fully rated, unless otherwise indicated.

I. Oversize Neutral: Ampacity and switch rating of neutral path through units indicated for oversize neutral shall be double the nominal rating of circuit in which switch is installed.

J. Heater: Equip switches exposed to outdoor temperatures and humidity, and other units indicated, with an internal heater. Provide thermostat within enclosure to control heater.

K. Battery Charger: For generator starting batteries.

1. Float type rated 10 A.

2. Ammeter to display charging current.

3. Fused ac inputs and dc outputs.

L. Annunciation, Control, and Programming Interface Components: Devices at transfer switches for communicating with remote programming devices, annunciators, or annunciator and control panels shall have communication capability matched with remote device.

M. Factory Wiring: Train and bundle factory wiring and label, consistent with Shop Drawings, either by color-code or by numbered or lettered wire and cable tape markers at terminations. Color-coding and wire and cable tape markers are specified in Division 26 Section "Identification for Electrical Systems."

1. Designated Terminals: Pressure type, suitable for types and sizes of field wiring indicated.

2. Power-Terminal Arrangement and Field-Wiring Space: Suitable for top, side, or bottom entrance of feeder conductors as indicated.

3. Control Wiring: Equipped with lugs suitable for connection to terminal strips.

N. Enclosures: General-purpose NEMA 250, Type 1, complying with NEMA ICS 6 and UL 508, unless otherwise indicated.

2.03 AUTOMATIC TRANSFER SWITCHES

A. Comply with Level 1 equipment according to NFPA 110.

B. Switching Arrangement: Double-throw type, incapable of pauses or intermediate position stops during normal functioning, unless otherwise indicated.

C. Manual Switch Operation: Under load, with door closed and with either or both sources energized. Transfer time is same as for electrical operation. Control circuit automatically disconnects from electrical operator during manual operation.

D. Manual Switch Operation: Unloaded. Control circuit automatically disconnects from electrical operator during manual operation.

E. Signal-Before-Transfer Contacts: A set of normally open/normally closed dry contacts operates in advance of retransfer to normal source. Interval is adjustable from 1 to 30 seconds.

F. Digital Communication Interface: Matched to capability of remote annunciator or annunciator and control panel.

G. Transfer Switches Based on Molded-Case-Switch Components: Comply with NEMA AB 1, UL 489, and UL 869A.

H. Automatic Closed-Transition Transfer Switches: Include the following functions and characteristics:

1. Fully automatic make-before-break operation.

2. Load transfer without interruption, through momentary interconnection of both power sources not exceeding 100 ms.

3. Initiation of No-Interruption Transfer: Controlled by in-phase monitor and sensors confirming both sources are present and acceptable.

a. Initiation occurs without active control of generator.

b. Controls ensure that closed-transition load transfer closure occurs only when the 2 sources are within plus or minus 5 electrical degrees maximum, and plus or minus 5 percent maximum voltage difference.

4. Failure of power source serving load initiates automatic break-before-make transfer.

I. In-Phase Monitor: Factory-wired, internal relay controls transfer so it occurs only when the two sources are synchronized in phase. Relay compares phase relationship and frequency difference between normal and emergency sources and initiates transfer when both sources are within 15 electrical degrees, and only if transfer can be completed within 60 electrical degrees. Transfer is initiated only if both sources are within 2 Hz of nominal frequency and 70 percent or more of nominal voltage.

J. Motor Disconnect and Timing Relay: Controls designate starters so they disconnect motors before transfer and reconnect them selectively at an adjustable time interval after transfer. Control connection to motor starters is through wiring external to automatic transfer switch. Time delay for reconnecting individual motor loads is adjustable between 1 and 60 seconds, and settings are as indicated. Relay contacts handling motor-control circuit inrush and seal currents are rated for actual currents to be encountered.

K. Programmed Neutral Switch Position: Switch operator has a programmed neutral position arranged to provide a midpoint between the two working switch positions, with an intentional, time-controlled pause at midpoint during transfer. Pause is adjustable from 0.5 to 30 seconds minimum and factory set for 0.5 second, unless otherwise indicated. Time delay occurs for both transfer directions. Pause is disabled unless both sources are live.

L. Automatic Transfer-Switch Features:

1. Undervoltage Sensing for Each Phase of Normal Source: Sense low phase-to-ground voltage on each phase. Pickup voltage shall be adjustable from 85 to 100 percent of nominal, and dropout voltage is adjustable from 75 to 98 percent of pickup value. Factory set for pickup at 90 percent and dropout at 85 percent.

2. Adjustable Time Delay: For override of normal-source voltage sensing to delay transfer and engine start signals. Adjustable from zero to six seconds, and factory set for one second.

3. Voltage/Frequency Lockout Relay: Prevent premature transfer to generator. Pickup voltage shall be adjustable from 85 to 100 percent of nominal. Factory set for pickup at 90 percent. Pickup frequency shall be adjustable from 90 to 100 percent of nominal. Factory set for pickup at 95 percent.

4. Time Delay for Retransfer to Normal Source: Adjustable from 0 to 30 minutes, and factory set for 10 minutes to automatically defeat delay on loss of voltage or sustained undervoltage of emergency source, provided normal supply has been restored.

5. Test Switch: Simulate normal-source failure.

6. Switch-Position Pilot Lights: Indicate source to which load is connected.

7. Source-Available Indicating Lights: Supervise sources via transfer-switch normal- and emergency-source sensing circuits.

a. Normal Power Supervision: Green light with nameplate engraved "Normal Source Available."

b. Emergency Power Supervision: Red light with nameplate engraved "Emergency Source Available."

8. Unassigned Auxiliary Contacts: Two normally open, single-pole, double-throw contacts for each switch position, rated 10 A at 240-V ac.

9. Transfer Override Switch: Overrides automatic retransfer control so automatic transfer switch will remain connected to emergency power source regardless of condition of normal source. Pilot light indicates override status.

10. Engine Starting Contacts: One isolated and normally closed, and one isolated and normally open; rated 10 A at 32-V dc minimum.

11. Engine Shutdown Contacts: Instantaneous; shall initiate shutdown sequence at remote engine-generator controls after retransfer of load to normal source.

12. Engine Shutdown Contacts: Time delay adjustable from zero to five minutes, and factory set for five minutes. Contacts shall initiate shutdown at remote engine-generator controls after retransfer of load to normal source.

13. Engine-Generator Exerciser: Solid-state, programmable-time switch starts engine generator and transfers load to it from normal source for a preset time, then retransfers and shuts down engine after a preset cool-down period. Initiates exercise cycle at preset intervals adjustable from 7 to 30 days. Running periods are adjustable from 10 to 30 minutes. Factory settings are for 7-day exercise cycle, 20-minute running period, and 5-minute cool-down period. Exerciser features include the following:

a. Exerciser Transfer Selector Switch: Permits selection of exercise with and without load transfer.

b. Push-button programming control with digital display of settings.

c. Integral battery operation of time switch when normal control power is not available.

2.04 REMOTE ANNUNCIATOR SYSTEM

A. Functional Description: Remote annunciator panel shall annunciate conditions for indicated transfer switches. Annunciation shall include the following:

1. Sources available, as defined by actual pickup and dropout settings of transfer-switch controls.

2. Switch position.

3. Switch in test mode.

4. Failure of communication link.

B. Annunciator Panel: LED-lamp type with audible signal and silencing switch.

1. Indicating Lights: Grouped for each transfer switch monitored.

2. Label each group, indicating transfer switch it monitors, location of switch, and identity of load it serves.

3. Mounting: Flush, modular, steel cabinet, unless otherwise indicated.

4. Lamp Test: Push-to-test or lamp-test switch on front panel.

2.05 SOURCE QUALITY CONTROL

A. Factory test and inspect components, assembled switches, and associated equipment. Ensure proper operation. Check transfer time and voltage, frequency, and time-delay settings for compliance with specified requirements. Perform dielectric strength test complying with NEMA ICS 1.

PART 3 - EXECUTION

3.01 INSTALLATION

A. Design each fastener and support to carry load indicated by seismic requirements and according to seismic-restraint details. See Division 26 Section "Vibration and Seismic Controls for Electrical Systems."

B. Floor-Mounting Switch: Anchor to floor by bolting.

1. Concrete Bases: 4 inches high, reinforced, with chamfered edges. Extend base no more than 4 inches in all directions beyond the maximum dimensions of switch, unless otherwise indicated or unless required for seismic support. Construct concrete bases according to Division 26 Section "Hangers and Supports for Electrical Systems."

C. Annunciator and Control Panel Mounting: Flush in wall, unless otherwise indicated.

D. Identify components according to Division 26 Section "Identification for Electrical Systems."

E. Set field-adjustable intervals and delays, relays, and engine exerciser clock.

3.02 CONNECTIONS

A. Wiring to Remote Components: Match type and number of cables and conductors to control and communication requirements of transfer switches as recommended by manufacturer. Increase raceway sizes at no additional cost to Owner if necessary to accommodate required wiring.

B. Ground equipment according to Division 26 Section "Grounding and Bonding for Electrical Systems."

C. Connect wiring according to Division 26 Section "Low-Voltage Electrical Power Conductors and Cables."

3.03 FIELD QUALITY CONTROL

A. Testing Agency: Engage a qualified independent testing and inspecting agency to perform tests and inspections and prepare test reports.

B. Manufacturer's Field Service: Engage a factory-authorized service representative to inspect, test, and adjust components, assemblies, and equipment installations, including connections. Report results in writing.

C. Perform tests and inspections and prepare test reports.

1. Manufacturer's Field Service: Engage a factory-authorized service representative to inspect components, assemblies, and equipment installation, including connections, and to assist in testing.

2. After installing equipment and after electrical circuitry has been energized, test for compliance with requirements.

3. Perform each visual and mechanical inspection and electrical test stated in NETA Acceptance Testing Specification. Certify compliance with test parameters.

4. Measure insulation resistance phase-to-phase and phase-to-ground with insulation-resistance tester. Include external annunciation and control circuits. Use test voltages and procedure recommended by manufacturer. Comply with manufacturer's specified minimum resistance.

Check for electrical continuity of circuits and for short circuits.

a. Inspect for physical damage, proper installation and connection, and integrity of barriers, covers, and safety features.

b. Verify that manual transfer warnings are properly placed.

c. Perform manual transfer operation.

5. After energizing circuits, demonstrate interlocking sequence and operational function for each switch at least three times.

a. Simulate power failures of normal source to automatic transfer switches and of emergency source with normal source available.

b. Simulate loss of phase-to-ground voltage for each phase of normal source.

c. Verify time-delay settings.

d. Verify pickup and dropout voltages by data readout or inspection of control settings.

e. Test bypass/isolation unit functional modes and related automatic transfer-switch operations.

f. Perform contact-resistance test across main contacts and correct values exceeding 500 microhms and values for 1 pole deviating by more than 50 percent from other poles.

g. Verify proper sequence and correct timing of automatic engine starting, transfer time delay, retransfer time delay on restoration of normal power, and engine cool-down and shutdown.

6. Ground-Fault Tests: Coordinate with testing of ground-fault protective devices for power delivery from both sources.

Verify grounding connections and locations and ratings of sensors.

D. Testing Agency's Tests and Inspections:

1. After installing equipment and after electrical circuitry has been energized, test for compliance with requirements.

2. Perform each visual and mechanical inspection and electrical test stated in NETA Acceptance Testing Specification. Certify compliance with test parameters.

a. Measure insulation resistance phase-to-phase and phase-to-ground with insulation-resistance tester. Include external annunciation and control circuits. Use test voltages and procedure recommended by manufacturer. Comply with manufacturer's specified minimum resistance.

Check for electrical continuity of circuits and for short circuits.

b. Inspect for physical damage, proper installation and connection, and integrity of barriers, covers, and safety features.

c. Verify that manual transfer warnings are properly placed.

d. Perform manual transfer operation.

3. After energizing circuits, demonstrate interlocking sequence and operational function for each switch at least three times.

a. Simulate power failures of normal source to automatic transfer switches and of emergency source with normal source available.

b. Simulate loss of phase-to-ground voltage for each phase of normal source.

c. Verify time-delay settings.

d. Verify pickup and dropout voltages by data readout or inspection of control settings.

e. Test bypass/isolation unit functional modes and related automatic transfer-switch operations.

f. Perform contact-resistance test across main contacts and correct values exceeding 500 microhms and values for 1 pole deviating by more than 50 percent from other poles.

g. Verify proper sequence and correct timing of automatic engine starting, transfer time delay, retransfer time delay on restoration of normal power, and engine cool-down and shutdown.

4. Ground-Fault Tests: Coordinate with testing of ground-fault protective devices for power delivery from both sources.

Verify grounding connections and locations and ratings of sensors.

E. Coordinate tests with tests of generator and run them concurrently.

F. Report results of tests and inspections in writing. Record adjustable relay settings and measured insulation and contact resistances and time delays. Attach a label or tag to each tested component indicating satisfactory completion of tests.

G. Remove and replace malfunctioning units and retest as specified above.

H. Infrared Scanning: After Substantial Completion, but not more than 60 days after Final Acceptance, perform an infrared scan of each switch. Remove all access panels so joints and connections are accessible to portable scanner.

1. Follow-up Infrared Scanning: Perform an additional follow-up infrared scan of each switch 11 months after date of Substantial Completion.

2. Instrument: Use an infrared scanning device designed to measure temperature or to detect significant deviations from normal values. Provide calibration record for device.

3. Record of Infrared Scanning: Prepare a certified report that identifies switches checked and that describes scanning results. Include notation of deficiencies detected, remedial action taken, and observations after remedial action.

3.04 DEMONSTRATION

A. Engage a factory-authorized service representative to train Owner's maintenance personnel to adjust, operate, and maintain transfer switches and related equipment as specified below. Refer to Division 01 Section "Demonstration and Training."

B. Coordinate this training with that for generator equipment.

END OF SECTION 26 36 00

26 41 13

LIGHTNING PROTECTION FOR STRUCTURES

PART 1 - GENERAL

1.01 RELATED DOCUMENTS

A. Drawings and general provisions of the Contract, including General and Supplementary Conditions and Division 01 Specification Sections, apply to this Section.

1.02 SUMMARY

A. Section includes lightning protection for structures.

1.03 SUBMITTALS

A. Shop Drawings: For air terminals and mounting accessories.

1. Layout of the lightning protection system, along with details of the components to be used in the installation.

2. Include indications for use of raceway, data on how concealment requirements will be met, and calculations required by NFPA 780 for bonding of grounded and isolated metal bodies.

B. Qualification Data: For qualified Installer and manufacturer. Include data on listing or certification by UL.

C. Certification, signed by Contractor, that roof adhesive is approved by manufacturer of roofing material.

D. Field quality-control reports.

E. The qualified installer must provide a system which measures no more than 2 ohms resistance.

F. Comply with recommendations in NFPA 780, Annex D, "Inspection and Maintenance of Lightning Protection Systems," for maintenance of the lightning protection system.

G. Other Informational Submittals: Plans showing dimensioned as-built locations of grounding features, including the following:

1. Ground rods.

2. Ground loop conductor.

1.04 QUALITY ASSURANCE

A. Installer Qualifications: Certified by UL as a Master Installer/Designer, trained and approved for installation of units required for this Project.

B. System Certificate:

1. UL Master Label.

C. Electrical Components, Devices, and Accessories: Listed and labeled as defined in NFPA 780, "Definitions" Article.

1.05 COORDINATION

A. Coordinate installation of lightning protection with installation of other building systems and components, including electrical wiring, supporting structures and building materials, metal bodies requiring bonding to lightning protection components, and building finishes.

B. Coordinate installation of air terminals attached to roof systems with roofing manufacturer and Installer.

1. Flashings of through-roof assemblies shall comply with roofing manufacturers' specifications.

PART 2 - PRODUCTS

2.01 LIGHTNING PROTECTION SYSTEM COMPONENTS

A. Comply with UL 96 and NFPA 780.

B. Roof-Mounted Air Terminals: NFPA 780, Class I copper.

1. Manufacturers: Subject to compliance with requirements, available manufacturers offering products that may be incorporated into the Work include the following:

a. Advanced Lightning Technology

b. Bonded Lightning Protection Systems

c. Thompson Lightning Protection

2. Air Terminals More than 24 Inches Long: With brace attached to the terminal at not less than half the height of the terminal.

3. Single-Membrane, Roof-Mounted Air Terminals: Designed specifically for single-membrane roof system materials. Comply with requirements in Division 07 roofing Sections.

C. Main and Bonding Conductors: #2/0 Copper

D. Ground Loop Conductor: #2/0 Copper

1. Ground Rods: Copper-clad steel; 3/4 inch in diameter by 10 feet long.

PART 3 - EXECUTION

3.01 INSTALLATION

A. Install lightning protection components and systems according to UL 96A and NFPA 780.

B. Install conductors with direct paths from air terminals to ground connections. Avoid sharp bends.

C. Conceal the following conductors:

1. System conductors.

2. Down conductors.

3. Interior conductors.

D. Cable Connections: Use crimped or bolted connections for all conductor splices and connections between conductors and other components. Use exothermic-welded connections in underground portions of the system.

E. Cable Connections: Use exothermic-welded connections for all conductor splices and connections between conductors and other components.

F. Bond extremities of vertical metal bodies exceeding 60 feet in length to lightning protection components.

G. Ground Loop: Install ground-level, potential equalization #2/0 copper conductor and extend around the perimeter of structure.

1. Bury ground ring not less than 24 inches from building foundation.

2. Bond ground terminals to the ground loop.

3. Bond grounded building systems to the ground loop conductor within 12 feet of grade level.

H. Bond lightning protection components with intermediate-level interconnection loop conductors to grounded metal bodies of building at 60-foot intervals.

3.02 CORROSION PROTECTION

A. Do not combine materials that can form an electrolytic couple that will accelerate corrosion in the presence of moisture unless moisture is permanently excluded from junction of such materials.

B. Use conductors with protective coatings where conditions cause deterioration or corrosion of conductors.

3.03 FIELD QUALITY CONTROL

A. Notify Architect at least 48 hours in advance of inspection before concealing lightning protection components.

B. UL Inspection: Meet requirements to obtain a UL Master Label for system.

C. LPI System Inspection: Meet requirements to obtain an LPI System Certificate.

D. Provide and record and submit the testing reports once installation has been completed and certified.

END OF SECTION 26 41 13

26 43 13

SURGE PROTECTION FOR LOW-VOLTAGE ELECTRICAL POWER CIRCUITS

PART 1 - GENERAL

1.01 RELATED DOCUMENTS

A. Drawings and general provisions of the Contract, including General and Supplementary Conditions and Division 01 Specification Sections, apply to this Section.

1.02 SUMMARY

A. Section includes field-mounted SPD’s for low-voltage (120 to 600 V) power distribution and control equipment.

B. Related Sections:

1. Division 26 Section "Switchboards" for factory-installed SPD’s.

2. Division 26 Section "Panelboards" for factory-installed SPD’s.

3. Division 26 Section "Wiring Devices" for devices with integral SPD’s.

1.03 DEFINITIONS

A. ATS: Acceptance Testing Specifications.

B. SVR: Suppressed voltage rating.

C. SPD: Surge Protective Device(s), both singular and plural.

1.04 SUBMITTALS

A. Product Data: For each type of product indicated. Include rated capacities, operating weights, electrical characteristics, furnished specialties, and accessories.

B. Qualification Data: For qualified testing agency- (NRTL) National Recognized Testing Laboratory

C. Product Certificates: For SPD devices, from manufacturer.

D. Field quality-control reports.

E. Operation and Maintenance Data: For SPD devices to include in emergency, operation, and maintenance manuals.

F. Warranties: Sample of special warranties.

1.05 QUALITY ASSURANCE

A. Testing Agency Qualifications: Member company of NETA or an NRTL.

1. Testing Agency's Field Supervisor: Currently certified by NETA or the equipment manufacturer to supervise on-site testing.

B. Electrical Components, Devices, and Accessories: Listed and labeled as defined in NFPA 70, by a testing agency, and marked for intended location and application.

C. Comply with IEEE C62.41.2 and test devices according to IEEE C62.45.

D. Comply with UL 1283 and UL 1449 (current edition).

E. The SPD installation complies with NFPA 70.

1.06 PROJECT CONDITIONS

A. Interruption of Existing Electrical Service: Do not interrupt electrical service to facilities occupied by Owner or others unless permitted under the following conditions and then only after arranging to provide temporary electrical service according to requirements indicated:

1. Notify Owner no fewer than four days in advance of proposed electrical service interruptions.

2. Do not proceed with interruption of electrical service without Owner's written permission.

1.07 COORDINATION

A. Coordinate location of field-mounted SPD devices to allow adequate clearances for maintenance.

B. Coordinate SPD devices with Division 26 Section "Electrical Power Monitoring and Control."

1.08 WARRANTY

A. Special Warranty: Manufacturer's standard form in which manufacturer agrees to repair or replace components of surge suppressors that fail in materials or workmanship within specified warranty period.

1. Warranty Period: Five (5) years from date of Substantial Completion.

1.09 EXTRA MATERIALS

A. Furnish extra materials that match products installed and that are packaged with protective covering for storage and identified with labels describing contents.

1. Where equipment design uses replaceable protection modules: One (1) of each size and type installed.

PART 2 - PRODUCTS

2.01 SERVICE ENTRANCE SUPPRESSORS

A. Manufacturers: Subject to compliance with requirements, provide products by one of the following:

1. Square D.

2. GE.

3. Eaton/ Cutler-Hammer.

4. Liebert

5. Current Technology Inc.; Danaher Power Solutions.

6. Leviton

B. Surge Protection Devices:

1. Comply with UL 1449 (current edition).

2. Modular design.

3. Fuses, rated at 200-kA interrupting capacity.

4. Fabrication using bolted compression lugs for internal wiring.

5. Integral disconnect switch or circuit breaker.

6. Redundant suppression circuits.

7. Arrangement with copper bus bars and for bolted connections to phase buses, neutral bus, and ground bus.

8. Arrangement with wire connections to phase buses, neutral bus, and ground bus.

9. LED indicator lights for power and protection status.

10. Audible alarm, with silencing switch, to indicate when protection has failed.

11. Form-C contacts rated at 1 A and 250-V ac, one normally open and one normally closed, for remote monitoring of protection status. Contacts shall reverse on failure of any surge diversion module or on opening of any current-limiting device. Coordinate with building power monitoring and control system.

12. Six-digit transient-event counter set to totalize transient surges.

C. Surge Current Capacity – The minimum surge current capacity the device is capable of withstanding shall be as shown in the following table:

Minimum surge current capacity based on ANSI / IEEE C62.41 location category			
Category	Application	Per Phase	Per Mode
C	Service Entrance Locations (Switchboards, Switchgear, MCC, Main Entrance)	250 kA	125 kA
B	High Exposure Roof Top Locations (Distribution Panelboards)	160 kA	80 kA
A	Branch Locations (Panelboards, MCCs, Busway)	120 kA	60 kA

D. Protection modes and UL 1449 VPR for grounded wye circuits with 480Y/277 V and 208Y/120 V, 3-phase, 4-wire circuits shall be as follows:

1. Line to Neutral:1200 V for 480Y/277 V, 700 V for 208Y/120 V.
2. Line to Ground: 2000 V for 480Y/277 V, 1200 V for 208Y/120 V.
3. Neutral to Ground: 1200 V for 480Y/277 V, 700 V for 208Y/120 V.

2.02 PANELBOARD SUPPRESSORS

A. Manufacturers: Subject to compliance with requirements, provide products by one of the following:

1. Square D.
2. GE.
3. Eaton/ Cutler Hammer.
4. Advanced Protection Technologies Inc. (APT).
5. Current Technology Inc.

B. Surge Protection Devices:

1. Non-modular.
2. LED indicator lights for power and protection status.
3. Audible alarm, with silencing switch, to indicate when protection has failed.
4. Form-C contacts rated at 1 A and 250-V ac, one normally open and one normally closed, for remote monitoring of protection status. Contacts shall reverse on failure of any surge diversion module or on opening of any current-limiting device. Coordinate with building power monitoring and control system.

C. Surge Current Capacity – The minimum surge current capacity the device is capable of withstanding shall be as shown in the following table:

Minimum surge current capacity based on ANSI / IEEE C62.41 location category			
Category	Application	Per Phase	Per Mode
C	Service Entrance Locations (Switchboards, Switchgear, MCC, Main Entrance)	250 kA	125 kA
B	High Exposure Roof Top Locations (Distribution Panelboards)	160 kA	80 kA
A	Branch Locations (Panelboards, MCCs, Busway)	120 kA	60 kA

D. Protection modes and UL 1449 VPR for grounded wye circuits with 480Y/277 V, 208Y/120 V, 3-phase, 4-wire circuits shall be as follows:

1. Line to Neutral: 1200 V for 480Y/277 V, 700 V for 208Y/120 V.

2. Line to Ground: 2000 V for 480Y/277 V, 1200 V for 208Y/120 V.

3. Neutral to Ground: 1200 V for 480Y/277 V, 700 V for 208Y/120 V.

2.03 ENCLOSURES

A. Indoor Enclosures: NEMA 250 Type 1.

B. Outdoor Enclosures: NEMA 250 Type 3R.

PART 3 - EXECUTION

3.01 INSTALLATION

A. Install SPD devices at service entrance on load side, with ground lead bonded to service entrance ground.

B. Install SPD devices for panelboards and auxiliary panels with conductors or buses between suppressor and points of attachment as short and straight as possible. Do not exceed manufacturer's recommended lead length. Do not bond neutral and ground at the SPD. Ground only at NEC required locations.

1. Provide manufacturer’s approved circuit breaker as applicable as a dedicated disconnecting means for SPD unless otherwise indicated.

3.02 FIELD QUALITY CONTROL

A. Manufacturer's Field Service: Engage a factory-authorized service representative to inspect, test, and adjust components, assemblies, and equipment installations, including connections.

1. Verify that electrical wiring installation complies with manufacturer's written installation requirements.

B. Tests and Inspections:

1. Perform each visual and mechanical inspection and electrical test stated in NETA ATS, "Surge Arresters, Low-Voltage Surge Protection Devices" Section. Certify compliance with test parameters.

2. After installing SPD devices but before electrical circuitry has been energized, test for compliance with requirements.

3. Complete startup checks according to manufacturer's written instructions.

C. SPD device will be considered defective if it does not pass tests and inspections.

D. Prepare test and inspection reports.

3.03 STARTUP SERVICE

A. Do not energize or connect service entrance equipment, panelboards, control terminals or data terminals to their sources until SPD devices are installed and connected.

B. Do not perform insulation resistance tests of the distribution wiring equipment with the SPD installed. Disconnect before conducting insulation resistance tests and reconnect immediately after the testing is over.

3.04 DEMONSTRATION

A. Engage a factory-authorized service representative to train. Owner's maintenance personnel to maintain SPD devices.

END OF SECTION 26 43 13

this page left blank intentionally

26 51 00

INTERIOR LIGHTING

PART 1 - GENERAL

1.01 RELATED DOCUMENTS

A. Drawings and general provisions of the Contract, including General and Supplementary Conditions and Division 01 Specification Sections, apply to this Section.

1.02 SUMMARY

A. This Section includes the following:

1. Interior lighting fixtures and drivers.

2. Emergency lighting units.

3. Exit signs LED lighted

4. Lighting fixture supports.

B. Related Sections include the following:

1. Division 26 Section "Lighting Control Devices" for automatic control of lighting, including time switches, photoelectric relays, occupancy sensors, and multiple lighting relays and contactors.

2. Division 26 Section "Wiring Devices" for manual wall-box dimmers for incandescent lamps.

3. Division 26 Section "Theatrical Lighting" for theatrical lighting fixtures and their controls.

C. Submittals:

1. Provide cut-sheets and summary all types of fixtures for review.

1.03 DEFINITIONS

A. BF: Ballast factor.

B. CRI: Color-rendering index.

C. CU: Coefficient of utilization.

D. LER: Luminaire efficacy rating.

E. Luminaire: Complete lighting fixture, including ballast housing if provided.

F. RCR: Room cavity ratio.

G. LED Light Emitted Diode

1.04 SUBMITTALS

A. Product Data: For each type of lighting fixture, arranged in order of fixture designation. Include data on features, accessories, finishes, and the following:

1. Physical description of lighting fixture including dimensions.

2. Emergency lighting units including battery and charger.

3. Ballast.

4. Energy-efficiency data.

5. Air and Thermal Performance Data: For air-handling lighting fixtures. Furnish data required in "Submittals" Article in Division 23 Section "Diffusers, Registers, and Grilles."

6. Sound Performance Data: For air-handling lighting fixtures. Indicate sound power level and sound transmission class in test reports certified according to standards specified in Division 23 Section "Diffusers, Registers, and Grilles."

7. Life, output, and energy-efficiency data for lamps.

8. Photometric data, in IESNA format, based on laboratory tests of each lighting fixture type, outfitted with lamps, ballasts, and accessories identical to those indicated for the lighting fixture as applied in this Project.

a. For indicated fixtures, photometric data shall be certified by a qualified independent testing agency. Photometric data for remaining fixtures shall be certified by the manufacturer.

b. Photometric data shall be certified by a manufacturer's laboratory with a current accreditation under the National Voluntary Laboratory Accreditation Program (NVLAP) for Energy Efficient Lighting Products.

B. Shop Drawings: Show details of nonstandard or custom lighting fixtures. Indicate dimensions, weights, methods of field assembly, components, features, and accessories.

1. Wiring Diagrams: Power and control wiring.

C. Samples for Verification: Interior lighting fixtures designated for sample submission in Interior Lighting Fixture Schedule. Each sample shall include the following:

1. Lamps: Specified units installed.

2. Accessories: Cords and plugs.

D. Product Certificates: For each type of ballast for bi-level and dimmer-controlled fixtures, signed by product manufacturer.

E. Qualification Data: For agencies providing photometric data for lighting fixtures.

F. Field quality-control test reports.

G. Operation and Maintenance Data: For lighting equipment and fixtures to include in emergency, operation, and maintenance manuals.

H. Warranties: Special warranties specified in this Section.

1.05 QUALITY ASSURANCE

A. Luminaire Photometric Data Testing Laboratory Qualifications: Provided by manufacturers' laboratories that are accredited under the National Volunteer Laboratory Accreditation Program for Energy Efficient Lighting Products.

B. Luminaire Photometric Data Testing Laboratory Qualifications: Provided by an independent agency, with the experience and capability to conduct the testing indicated, that is an NRTL as defined by OSHA in 29 CFR 1910.7.

C. Electrical Components, Devices, and Accessories: Listed and labeled as defined in NFPA 70, Article 100, by a testing agency acceptable to authorities having jurisdiction, and marked for intended use.

D. Comply with NFPA 70.

E. FMG Compliance: Lighting fixtures for hazardous locations shall be listed and labeled for indicated class and division of hazard by FMG.

F. Mockups: Provide interior lighting fixtures for room or module mock-ups, complete with power and control connections.

1. Obtain Architect's approval of fixtures for mockups before starting installations.

2. Maintain mockups during construction in an undisturbed condition as a standard for judging the completed Work.

3. Approved fixtures in mockups may become part of the completed Work if undisturbed at time of Substantial Completion.

1.06 COORDINATION

A. Coordinate layout and installation of lighting fixtures and suspension system with other construction that penetrates ceilings or is supported by them, including HVAC equipment, fire-suppression system, and partition assemblies.

1.07 WARRANTY

A. Special Warranty for Emergency Lighting Batteries: Manufacturer's standard form in which manufacturer of battery-powered emergency lighting unit agrees to repair or replace components of rechargeable batteries that fail in materials or workmanship within specified warranty period.

1. Warranty Period for Emergency Lighting Unit Batteries: 5 years from date of Substantial Completion. Full warranty shall apply for first year, and prorated warranty for the remaining nine years.

2. Warranty Period for Emergency Fluorescent Ballast Batteries: 5 years from date of Substantial Completion. Full warranty shall apply for first year, and prorated warranty for the remaining six years.

B. Special Warranty for Ballasts: Manufacturer's standard form in which ballast manufacturer agrees to repair or replace ballasts that fail in materials or workmanship within specified warranty period.

1. Warranty Period for Electronic Ballasts: Five years from date of Substantial Completion.

2. Warranty Period for Electromagnetic Ballasts: Three years from date of Substantial Completion.

C. Special Warranty for T5 and T8 Fluorescent Lamps: Manufacturer's standard form, made out to Owner and signed by lamp manufacturer agreeing to replace lamps that fail in materials or workmanship, f.o.b. the nearest shipping point to Project site, within specified warranty period indicated below.

1. Warranty Period: Two (2) year(s) from date of Substantial Completion.

1.08 EXTRA MATERIALS

A. Furnish extra materials described below that match products installed and that are packaged with protective covering for storage and identified with labels describing contents.

1. Lamps: 10 for every 100 of each type and rating installed. Furnish at least one of each type.

2. Plastic Diffusers and Lenses: 1 for every 100 of each type and rating installed. Furnish at least one of each type.

3. Battery and Charger Data: One for each emergency lighting unit.

4. Ballasts: 1 for every 100 of each type and rating installed. Furnish at least one of each type.

5. Globes and Guards: 1 for every 20 of each type and rating installed. Furnish at least one of each type.

PART 2 - PRODUCTS

2.01 MANUFACTURERS

A. In other Part 2 articles where titles below introduce lists, the following requirements apply to product selection:

B. In Interior Lighting Fixture Schedule where titles below are column or row headings that introduce lists, the following requirements apply to product selection:

1. Available Manufacturers: Subject to compliance with requirements, manufacturers offering products that may be incorporated into the Work include, but are not limited to, manufacturers specified.

C. Luminaires, Acceptable Manufacturers:

1.

2. Philips

3. Hubbell

4. Kenall

5. Lithonia

6. Cooper

2.02 LIGHTING FIXTURES AND COMPONENTS, GENERAL REQUIREMENTS

A. Recessed Fixtures: Comply with NEMA LE 4 for ceiling compatibility for recessed fixtures.

B. Incandescent Fixtures: Comply with UL 1598. Where LER is specified, test according to NEMA LE 5A.

C. Fluorescent Fixtures: Comply with UL 1598. Where LER is specified, test according to NEMA LE 5 and NEMA LE 5A as applicable.

D. Metal Parts: Free of burrs and sharp corners and edges.

E. Sheet Metal Components: Steel, unless otherwise indicated. Form and support to prevent warping and sagging.

F. Doors, Frames, and Other Internal Access: Smooth operating, free of light leakage under operating conditions, and designed to permit re-lamping without use of tools. Designed to prevent doors, frames, lenses, diffusers, and other components from falling accidentally during re-lamping and when secured in operating position.

G. Reflecting surfaces shall have minimum reflectance as follows, unless otherwise indicated:

1. White Surfaces: 85 percent.

2. Specular Surfaces: 83 percent.

3. Diffusing Specular Surfaces: 75 percent.

4. Laminated Silver Metalized Film: 90 percent.

H. Plastic Diffusers, Covers, and Globes:

1. Acrylic Lighting Diffusers: 100 percent virgin acrylic plastic. High resistance to yellowing and other changes due to aging, exposure to heat, and UV radiation.

a. Lens Thickness: At least 0.125 inch minimum unless different thickness is indicated.

b. UV stabilized.

2. Glass: Annealed crystal glass, unless otherwise indicated.

I. Electromagnetic-Interference Filters: Factory installed to suppress conducted electromagnetic-interference as required by MIL-STD-461E. Fabricate lighting fixtures, indicated to require a filter, with one filter per ballast.

J. Air-Handling Fluorescent Fixtures: For use with plenum ceiling for air return and heat extraction and for attaching an air-diffuser-boot assembly specified in Division 23 Section "Diffusers, Registers, and Grilles."

1. Air Supply Units: Slots in one or both side trims join with air-diffuser-boot assemblies.

2. Heat Removal Units: Air path leads through lamp cavity.

3. Combination Heat Removal and Air Supply Unit: Heat is removed through lamp cavity at both ends of the fixture door with air supply same as for air supply units.

4. Dampers: Operable from outside fixture for control of return-air volume.

5. Static Fixture: Air supply slots are blanked off, and fixture appearance matches active units.

2.03 BALLASTS FOR LINEAR FLUORESCENT LAMPS

A. Electronic Ballasts: Comply with ANSI C82.11; instant-start type, unless otherwise indicated, and designed for type and quantity of lamps served. Ballasts shall be designed for full light output unless dimmer or bi-level control is indicated.

1. Sound Rating: A.

2. Total Harmonic Distortion Rating: Less than 10 percent.

3. Transient Voltage Protection: IEEE C62.41, Category A or better.

4. Operating Frequency: 20 kHz or higher.

5. Lamp Current Crest Factor: 1.7 or less.

6. BF: 0.88 or higher.

7. Power Factor: 0.95 or higher.

8. Parallel Lamp Circuits: Multiple lamp ballasts shall comply with ANSI C 82.11 and shall be connected to maintain full light output on surviving lamps if one or more lamps fail.

B. Electronic Programmed-Start Ballasts for T5 Lamps: Comply with ANSI C82.11 and the following:

1. Lamp end-of-life detection and shutdown circuit for T5 diameter lamps.

2. Automatic lamp starting after lamp replacement.

3. Sound Rating: A.

4. Total Harmonic Distortion Rating: Less than 20 percent.

5. Transient Voltage Protection: IEEE C62.41, Category A or better.

6. Operating Frequency: 20 kHz or higher.

7. Lamp Current Crest Factor: 1.7 or less.

8. BF: 0.95 or higher, unless otherwise indicated.

9. Power Factor: 0.95 or higher.

C. Electromagnetic Ballasts: Comply with ANSI C82.1; energy saving, high-power factor, Class P, and having automatic-reset thermal protection.

1. Ballast Manufacturer Certification: Indicated by label.

D. Ballasts for Low-Temperature Environments:

1. Temperatures 0 Deg F and Higher: Electronic or electromagnetic type rated for 0 deg F starting and operating temperature with indicated lamp types.

E. Ballasts for Low Electromagnetic-Interference Environments: Comply with 47 CFR, Chapter 1, Part 18, Subpart C, for limitations on electromagnetic and radio-frequency interference for consumer equipment.

F. Ballasts for Dimmer-Controlled Lighting Fixtures: Electronic type.

1. Dimming Range: 100 to 5 percent of rated lamp lumens.

2. Ballast Input Watts: Can be reduced to 20 percent of normal.

3. Compatibility: Certified by manufacturer for use with specific dimming control system and lamp type indicated.

G. Ballasts for Bi-Level Controlled Lighting Fixtures: Electronic type.

1. Operating Modes: Ballast circuit and leads provide for remote control of the light output of the associated lamp between high- and low-level and off.

a. High-Level Operation: 100 percent of rated lamp lumens.

b. Low-Level Operation: 30 percent of rated lamp lumens.

2. Ballast shall provide equal current to each lamp in each operating mode.

3. Compatibility: Certified by manufacturer for use with specific bi-level control system and lamp type indicated.

2.04 BALLASTS FOR COMPACT FLUORESCENT LAMPS

A. Description: Electronic programmed rapid-start type, complying with ANSI C 82.11, designed for type and quantity of lamps indicated. Ballast shall be designed for full light output unless dimmer or bi-level control is indicated:

1. Lamp end-of-life detection and shutdown circuit.

2. Automatic lamp starting after lamp replacement.

3. Sound Rating: A.

4. Total Harmonic Distortion Rating: Less than 20 percent.

5. Transient Voltage Protection: IEEE C62.41, Category A or better.

6. Operating Frequency: 20 kHz or higher.

7. Lamp Current Crest Factor: 1.7 or less.

8. BF: 0.95 or higher, unless otherwise indicated.

9. Power Factor: 0.95 or higher.

10. Interference: Comply with 47 CFR, Chapter 1, Part 18, Subpart C, for limitations on electromagnetic and radio-frequency interference for non-consumer equipment.

11. Ballast Case Temperature: 75 deg C, maximum.

B. Ballasts for Dimmer-Controlled Lighting Fixtures: Electronic type.

1. Dimming Range: 100 to 5 percent of rated lamp lumens.

2. Ballast Input Watts: Can be reduced to 20 percent of normal.

3. Compatibility: Certified by manufacturer for use with specific dimming control system and lamp type indicated.

2.05 EMERGENCY FLUORESCENT POWER UNIT

A. Internal Type: Self-contained, modular, battery-inverter unit, factory mounted within lighting fixture body and compatible with ballast. Comply with UL 924.

1. Emergency Connection: Operate 1 fluorescent lamp(s) continuously at an output of 1100 lumens each. Connect un-switched circuit to battery-inverter unit and switched circuit to fixture ballast.

2. Night-Light Connection: Operate one fluorescent lamp continuously.

3. Test Push Button and Indicator Light: Visible and accessible without opening fixture or entering ceiling space.

a. Push Button: Push-to-test type, in unit housing, simulates loss of normal power and demonstrates unit operability.

b. Indicator Light: LED indicates normal power on. Normal glow indicates trickle charge; bright glow indicates charging at end of discharge cycle.

4. Battery: Sealed, maintenance-free, nickel-cadmium type.

5. Charger: Fully automatic, solid-state, constant-current type with sealed power transfer relay.

6. Remote Test: Switch in hand-held remote device aimed in direction of tested unit initiates coded infrared signal. Signal reception by factory-installed infrared receiver in tested unit triggers simulation of loss of its normal power supply, providing visual confirmation of either proper or failed emergency response.

7. Integral Self-Test: Factory-installed electronic device automatically initiates code-required test of unit emergency operation at required intervals. Test failure is annunciated by an integral audible alarm and flashing red LED.

2.06 BALLASTS FOR HID LAMPS

A. Electromagnetic Ballast for Metal-Halide Lamps: Comply with ANSI C82.4 and UL 1029. Include the following features, unless otherwise indicated:

1. Ballast Circuit: Constant-wattage autotransformer or regulating high-power-factor type.

2. Minimum Starting Temperature: Minus 22 deg F for single-lamp ballasts.

3. Normal Ambient Operating Temperature: 104 deg F.

4. Open-circuit operation that will not reduce average life.

5. Low-Noise Ballasts: Manufacturers' standard epoxy-encapsulated models designed to minimize audible fixture noise.

B. Electronic Ballast for Metal-Halide Lamps: Include the following features unless otherwise indicated:

1. Lamp end-of-life detection and shutdown circuit.

2. Sound Rating: A.

3. Total Harmonic Distortion Rating: Less than 15 percent.

4. Transient Voltage Protection: IEEE C62.41, Category A or better.

5. Lamp Current Crest Factor: 1.5 or less.

6. Power Factor: .90 or higher.

7. Interference: Comply with 47 CFR, Chapter 1, Part 18, Subpart C, for limitations on electromagnetic and radio-frequency interference for non-consumer equipment.

8. Protection: Class P thermal cutout.

9. Retain subparagraph and associated subparagraphs below for bi-level ballasts.

10. Bi-Level Dimming Ballast: Ballast circuit and leads provide for remote control of the light output of the associated fixture between high- and low-level and off.

    a. High-Level Operation: 100 percent of rated lamp lumens.

    b. Low-Level Operation: 35 percent of rated lamp lumens.

    c. Compatibility: Certified by ballast manufacturer for use with specific bi-level control system and lamp type indicated. Certified by lamp manufacturer that ballast operating modes are free from negative effect on lamp life and color-rendering capability.

11. Continuous Dimming Ballast: Dimming range shall be from 100 to 35 percent of rated lamp lumens without flicker.

    a. Ballast Input Watts: Reduced to a maximum of 50 percent of normal at lowest dimming setting.

    b. Compatibility: Certified by manufacturer for use with specific dimming control system and lamp type indicated. Certified by lamp manufacturer that ballast operating modes are free from negative effect on lamp life and color-rendering capability.

C. Auxiliary Instant-On Quartz System: Factory-installed feature automatically switches quartz lamp on when fixture is initially energized and when power outages occur. System automatically turns quartz lamp off when HID lamp reaches approximately 60 percent light output.

D. High-Pressure Sodium Ballasts: Electromagnetic type, with solid-state igniter/starter. Igniter-starter shall have an average life in pulsing mode of 10,000 hours at an igniter/starter-case temperature of 90 deg C.

1. Instant Re-strike Device: Integral with ballast, or solid-state potted module, factory installed within fixture and compatible with lamps, ballasts, and mogul sockets up to 150 W.

a. Re-strike Range: 105- to 130-V ac.

b. Maximum Voltage: 250-V peak or 150-V ac RMS.

2. Minimum Starting Temperature: Minus 40 deg F.

3. Open-circuit operation shall not reduce average lamp life.

2.07 EXIT SIGNS LED LIGHTED

A. Description: Comply with UL 924; for sign colors, visibility, luminance, and lettering size, comply with authorities having jurisdiction.

B. Internally Lighted Signs:

1. Lamps for AC Operation: Fluorescent, 2 for each fixture, 20,000 hours of rated lamp life.

2. Lamps for AC Operation: LEDs, 70,000 hours minimum rated lamp life.

3. Self-Powered Exit Signs (Battery Type): Integral automatic charger in a self-contained power pack.

a. Battery: Sealed, maintenance-free, nickel-cadmium type.

b. Charger: Fully automatic, solid-state type with sealed transfer relay.

c. Operation: Relay automatically energizes lamp from battery when circuit voltage drops to 80 percent of nominal voltage or below. When normal voltage is restored, relay disconnects lamps from battery, and battery is automatically recharged and floated on charger.

d. Test Push Button: Push-to-test type, in unit housing, simulates loss of normal power and demonstrates unit operability.

e. LED Indicator Light: Indicates normal power on. Normal glow indicates trickle charge; bright glow indicates charging at end of discharge cycle.

f. Remote Test: Switch in hand-held remote device aimed in direction of tested unit initiates coded infrared signal. Signal reception by factory-installed infrared receiver in tested unit triggers simulation of loss of its normal power supply, providing visual confirmation of either proper or failed emergency response.

g. Integral Self-Test: Factory-installed electronic device automatically initiates code-required test of unit emergency operation at required intervals. Test failure is annunciated by an integral audible alarm and flashing red LED.

4. Master/Remote Sign Configurations:

a. Master Unit: Comply with requirements above for self-powered exit signs, and provide additional capacity in LED power supply for power connection to remote unit.

b. Remote Unit: Comply with requirements above for self-powered exit signs, except omit power supply, battery and test features. Arrange to receive full power requirements from master unit. Connect for testing concurrently with master unit as a unified system.

2.08 EMERGENCY LIGHTING UNITS

A. Description: Self-contained units complying with UL 924.

1. Battery: Sealed, maintenance-free, lead-acid type.

2. Charger: Fully automatic, solid-state type with sealed transfer relay.

3. Operation: Relay automatically turns lamp on when power supply circuit voltage drops to 80 percent of nominal voltage or below. Lamp automatically disconnects from battery when voltage approaches deep-discharge level. When normal voltage is restored, relay disconnects lamps from battery, and battery is automatically recharged and floated on charger.

4. Test Push Button: Push-to-test type, in unit housing, simulates loss of normal power and demonstrates unit operability.

5. LED Indicator Light: Indicates normal power on. Normal glow indicates trickle charge; bright glow indicates charging at end of discharge cycle.

6. Wire Guard: Heavy-chrome-plated wire guard protects lamp heads or fixtures.

7. Integral Time-Delay Relay: Holds unit on for fixed interval of 5 minutes when power is restored after an outage.

8. Remote Test: Switch in hand-held remote device aimed in direction of tested unit initiates coded infrared signal. Signal reception by factory-installed infrared receiver in tested unit triggers simulation of loss of its normal power supply, providing visual confirmation of either proper or failed emergency response.

9. Integral Self-Test: Factory-installed electronic device automatically initiates code-required test of unit emergency operation at required intervals. Test failure is annunciated by an integral audible alarm and flashing red LED.

2.09 LIGHTING FIXTURE SUPPORT COMPONENTS

A. Comply with Division 26 Section "Hangers and Supports for Electrical Systems" for channel- and angle-iron supports and nonmetallic channel and angle supports.

B. Single-Stem Hangers: 1/2-inch steel tubing with swivel ball fittings and ceiling canopy. Finish same as fixture.

C. Twin-Stem Hangers: Two, 1/2-inch steel tubes with single canopy designed to mount a single fixture. Finish same as fixture.

D. Wires: ASTM A 641/A 641M, Class 3, soft temper, zinc-coated steel, 12 gage.

E. Wires for Humid Spaces: ASTM A 580/A 580M, Composition 302 or 304, annealed stainless steel, 12 gage.

F. Rod Hangers: 3/16-inch minimum diameter, cadmium-plated, threaded steel rod.

G. Hook Hangers: Integrated assembly matched to fixture and line voltage and equipped with threaded attachment, cord, and locking-type plug.

PART 3 - EXECUTION

3.01 INSTALLATION

A. Lighting fixtures: Set level, plumb, and square with ceilings and walls. Install lamps in each fixture.

B. Support for Lighting Fixtures in or on Grid-Type Suspended Ceilings: Use grid as a support element.

1. Install a minimum of four ceiling support system rods or wires for each fixture. Locate not more than 6 inches from lighting fixture corners.

2. Support Clips: Fasten to lighting fixtures and to ceiling grid members at or near each fixture corner with clips that are UL listed for the application.

3. Fixtures of Sizes Less Than Ceiling Grid: Install as indicated on reflected ceiling plans or center in acoustical panel, and support fixtures independently with at least two 3/4-inch metal channels spanning and secured to ceiling tees.

4. Install at least four independent support rod or wire from BUILDING structure to a tab on lighting fixture. Wire or rod shall have breaking strength of the weight of fixture at a safety factor of 3.

C. Suspended Lighting Fixture Support:

1. Pendants and Rods: Where longer than 48 inches, brace to limit swinging.

2. Stem-Mounted, Single-Unit Fixtures: Suspend with twin-stem hangers.

3. Continuous Rows: Use tubing or stem for wiring at one point and tubing or rod for suspension for each unit length of fixture chassis, including one at each end.

D. Air-Handling Lighting Fixtures: Install with dampers closed and ready for adjustment.

E. Adjust aim-able lighting fixtures to provide required light intensities.

F. Connect wiring according to Division 26 Section "Low-Voltage Electrical Power Conductors and Cables."

3.02 FIELD QUALITY CONTROL

A. Test for Emergency Lighting: Interrupt power supply to demonstrate proper operation. Verify transfer from normal power to battery and retransfer to normal.

B. Prepare a written report of tests, inspections, observations, and verifications indicating and interpreting results. If adjustments are made to lighting system, retest to demonstrate compliance with standards.

3.03 CLEANING

A. Clean the diffuser or lenses before installing to the fixture.

END OF SECTION 26 51 00

26 90 20

ELECTRICAL CONTROLS

PART 1 - GENERAL

1.01 RELATED DOCUMENTS

A. Requirements of Division 26 "COMMON WORK RESULTS FOR ELECTRICAL" apply to this Section.

1.02 SECTION INCLUDES

A. Cabinets.

B. Relays/Contactors.

C. Photo cells.

D. Time clocks.

E. Power supplies.

F. Terminal blocks.

G. Plastic wiring troughs.

H. Miscellaneous.

1.03 SUBMITTALS: SUBMIT THE FOLLOWING IN ACCORDANCE WITH SECTION 260500.

A. Shop Drawings: Provide complete point to point wiring diagrams inside low voltage panels and from panels to control/switching sources. Provide shop drawings indicating all conduit sizes and locations required for switching system.

B. Product Data: Provide for each device specified. Indicate coil and contact ratings, dimensions, cabinets and accessory items.

C. Provide category and UL file number for products.

D. Warranties.

E. Submittals for this section shall be signed by the subcontractor responsible for Division 13 controls, also.

PART 2 - PRODUCTS

2.01 CABINETS

A. Factory mount relays, time clocks, power supplies, terminal blocks, wiring troughs and accessories in a NEMA 1 cabinet conforming to Section 260533 RACEWAY AND BOXES FOR ELECTRICAL SYSTEMS by a UL 508 listed manufacturer unless otherwise directed.

B. Contactors/relays shall be individually identified with name tags. All wiring within cabinets shall be pre wired through plastic wiring troughs and brought to terminal blocks for field connections. Wires at terminal blocks and contactors/relays shall be identified by contactor/relay and pole number.

C. Low voltage control wiring shall conform to Section 260519 LOW-VOLTAGE ELECTRICAL POWER CONDUCTORS AND CABLES 600V wires and cables.

D. Provide 1/4" minimum spacing between non-power limited wiring and power limited wiring.

E. Cabinet and components shall be suitable for installation and operation in an unconditioned space.

F. Relay cabinet power shall be 120 volts or as otherwise indicated.

G. Cabinets shall be lockable, keyed alike. Furnish two (2) keys for each cabinet.

H. Provide wire bending space, clearances, construction, etc. in accordance with NEC-312.

2.02 RELAYS/CONTACTORS

A. Provide mechanically held SPST Class A150 contacts of required number, voltage, and current rating conforming to NEMA ICS 2 and UL 508 "industrial control equipment." Contacts shall be fully field convertible from N.O. to N.C.

1. Magnetic Control Relay: Class A300.

2. Time Delay Relay: Class A600.

B. Control coil shall be Class 2 power limited with solid state control accessories as required.

C. Line and low voltage terminals shall be screw type.

D. Relays shall be ASCO 917 with 47, 48 or 49 Series control modules as required or equal by General Electric, Square D, Westinghouse/Cutler-Hammer, Siemens/ITE

2.03 PHOTO CELLS

A. Photocell switch manufactured to NEMA ICS 2 and UL 773A "Non-industrial Photoelectric Switches for Lighting Control."

B. Provide voltage, NEMA rating, contact rating and contact configuration as required.

C. Sensitivity two (2) footcandles to 50 footcandles, adjustable.

D. Provide photo cells manufactured by Intermatic, Dayton, Paragon or Tork.

2.04 TIME CLOCKS

A. Provide 24 hour clock timer manufactured to NEMA ICS 2 and UL 917 "Clock Operated Switches" with two (2) astronomic time setting and 12 hour spring wound reserve power carry over.

B. Manufacturers: Intermatic, Dayton, Paragon, Tork.

2.05 POWER SUPPLY

A. Provide low voltage power supply in conformance with NEC Article 725 Class 2 and UL 1585 "Class 2 and Class 3 Transformers."

B. Provide transformer size, primary, secondary fusing and accessories as required.

C. Manufacturers: General Electric, Square D, Westinghouse, Dormeyer, White Rodgers.

2.06 TERMINAL BLOCKS

A. Conform to NEMA ICS 4 and UL 486A "Wire Connectors and Soldering Lugs for use with Copper Conductors."

B. Provide phenolic, channel mount, screw type terminals.

C. Manufacturers: General Electric, Square D, Westinghouse, Cutler/Hammer, Buchanan, Allen-Bradley, Entrelec, Pass & Seymour/Legrand, Thomas and Betts, Marathon, Ilsco.

D. Provide UL listed copper ground terminal.

2.07 PLASTIC WIRING TROUGHS

A. Provide open slot vinyl wiring duct with snap on cover conforming to NEMA ICS 6 of width and height as required.

B. Manufacturers: Gould Shawmut, Panduit, Rob Roy, Tyton, Electrovert, Pass & Seymour/Legrand, Leviton.

2.08 MISCELLANEOUS

A. Provide miscellaneous items (diodes, solid state relays, logic chips, fuse holders, etc.) as required for a complete operating system.

PART 3 - EXECUTION

3.01 INSTALLATION

A. Furnish all labor, materials, tools, equipment, and services for interface with HVAC controls, lighting controls, and other control systems as indicated and required by contract documents. Relays, conduit, wiring and accessories required shall be provided and installed.

B. Completely coordinate with work of all other trades.

C. Although such work is not specifically indicated, furnish and install all supplementary or miscellaneous items, appurtenances and devices incidental to or necessary for a sound, secure and complete installation.

D. Mount control panels where indicated on drawings and provide proper NEC working clearance assuming panel will require examination while energized.

E. Use manufacturer's recommended cable size for length of run and relays served.

F. Provide conduit and wire between control panels, power panels, relays and low voltage switches as required to achieve the sequence of operation indicated.

G. Inside relay cabinets, provide 1/4" minimum spacing between non-power limited wiring and power limited wiring. Otherwise, power limited wiring shall be in separate enclosures from non-power limited wiring.

3.02 DEMONSTRATION

A. Provide system demonstration under provisions of contract closeout.

END OF SECTION 26 90 20

26 95 00

FIELD ELECTRICAL TESTING

PART 1 - GENERAL

1.01 RELATED DOCUMENTS

A. Requirements of Division 26 "COMMON WORK RESULTS FOR ELECTRICAL" apply to this Section.

1.02 SECTION INCLUDES

A. Testing by Installing Contractor

B. Testing by Independent Certified Testing Contractor

C. All testing shall be witness with the Owner, Commissioning Agent, Engineer or Architect.

1.03 SUBMITTALS: SUBMIT THE FOLLOWING IN ACCORDANCE WITH SECTION 260500.

A. Contractor shall submit experience and certified of testing firm and individuals who will be performing and evaluating tests before any tests are done.

B. Contractor shall submit in writing at least 24 hours in advance notification of the occurrence of any test described in this section.

C. Contractor shall record all test data and submit three (3) copies for review. In addition to the test data, each record shall include; date of test, ambient temperature, climate conditions, instruments used, names of test personnel and witnesses and identification of items tested.

D. The testing firm shall maintain a written record of all tests and, upon completion of project, shall assemble and certify a final test report.

1.04 QUALITY ASSURANCE: COMPLY WITH THE FOLLOWING.

A. All tests shall be done in accordance with all applicable codes and standards.

B. Qualifications of Testing Firm:

1. The testing firm shall be an independent testing organization which can function as an unbiased testing authority, professionally independent of the manufacturers, suppliers, and installers of equipment or systems evaluated by the testing firm.

2. The testing firm shall be regularly engaged in the testing of electrical equipment devices, installations, and systems.

3. The testing firm shall meet OSHA criteria for accreditation of testing laboratories, Title 29, or be a Full Member company of the International Electrical Testing Association (IETA).

4. The testing firm shall utilize engineers and technicians who are regularly employed by the firm for testing services.

PART 2 - PRODUCTS (NOT USED)

PART 3 - EXECUTION

3.01 DIVISION OF RESPONSIBILITY

A. All tests indicate in this specification section shall be done by the testing firm except the installing contractor shall be responsible for the following:

1. The contractor shall perform routine insulation-resistance, continuity, and rotation tests for all distribution and utilization equipment prior to and in addition to tests performed by the testing firm specified herein.

2. 120 Volt General Purpose Receptacles: All 120 volt general purpose receptacles shall be tested for correct connection using a Hubbell Catalog #5200 or equal receptacle tester.

3. 120 Volt Ground Fault Circuit, Interrupter (GFCI) Receptacles: All 120 volt GFCI receptacles shall be tested for correct connection and rating using Hubbell Catalog #GFT-2G with a range of 2 to 7 milliamps.

4. Enclosed (Disconnect) Switches: Subsequently to completion of installation of electrical disconnect switches, energize circuits and demonstrate capability and compliance with requirements. Except as otherwise indicated, do not test switches by operating them under load. However, demonstrate switch operation through six opening/closing cycles with circuit unloaded. Open each switch enclosure for inspection of interior, mechanical and electrical connections, fuse installation, and for verification of type and rating of fuses installed. Correct deficiencies then retest to demonstrate compliance. Remove and replace defective units with new units and retest.

5. Light Switching: Verify proper connection and operation of switches for lighting fixtures.

6. Lighting Contactors: Demonstrate proper operation of lighting contactors for all items indicated in Division 16.

7. Balancing Loads: After Substantial Completion, but not more than two months after Final Acceptance, conduct load-balancing measurements on panelboards and circuit changes as follows:

   a. Perform measurements during period of normal working load as advised by the Owner.

   b. Perform load-balancing circuit changes outside the normal occupancy/working schedule of the facility. Make special arrangements with Owner to avoid disrupting critical 24-hour services such as fax machines and on-line data processing, computing, transmitting, and receiving equipment.

   c. Recheck loads after circuit changes during normal load period. Record all load readings before and after changes and submit test records.

d. Tolerance: Difference between phase loads exceeding 20 percent at any one panelboard is not acceptable. Rebalance and recheck as required to meet this minimum requirement.

B. The Contractor shall supply a suitable and stable source of electrical power to each test site. The testing firm shall specify the specific power requirements.

C. The Contractor shall notify the testing firm when equipment becomes available for acceptance tests. Work shall be coordinated to expedite project scheduling.

D. Any system, material, or workmanship which is found defective on the basis of acceptance tests shall be reported to the Owner/Engineer's representative replaced or repaired by the Contractor at no cost to the Owner, and retested.

E. An electrical system will not be accepted until tested in its entirety and results reported to the Owner.

3.02 TESTING FIRM

A. The testing firm shall test the following equipment as indicated in each section:

1. 600V Wire and Cables

2. Grounding and Bonding.

3. Dry Type Transformers.

4. Enclosed Motor Controllers

5. Motor Control Center

6. Panelboards

7. Switchboards/Switchgear

3.03 INFRARED BASELINE SCANNING

A. Provide scanning for Switchboards, Transformers, MCC's, Panelboards, Generator connection points, Copper Busses, Circuit Breakers, Terminations and Transfer Switches.

B. After Substantial Completion, but not more than two (2) months after Final Acceptance, perform an infrared IR scan in Section 26-95-00 Part 3, 3.2 of each panelboard, switchboard and pad mounted transformer. Remove fronts to make joints and connections accessible to a portable scanner.

C. Instrument: Use an approved infrared IR scanning device designed to measure temperature or detect significant deviations from normal values. Provide calibration record for device used.

D. Record of Infrared IR Scanning: Prepare a certified report identifying panelboards checked and describing results of scanning. Include notation of deficiencies detected, remedial action taken, and observations after remedial action.

END OF SECTION 26 95 00

This page WAS LEFT BLANK intentionally

SECTION 270000
COMMUNICATIONS

PART 1 - GENERAL

1.1 SUMMARY

A. This Section includes the following:

1. Project overview for the Fort Bend County Information Technology Building and Data Center.
2. Telecommunication Project Management requirements and Quality Assurance Requirements.
3. Telecommunication Documentation requirements.
4. Structured Cabling System testing requirements.
5. Except as modified in this section, General Conditions, Supplementary Conditions, applicable provisions of Division 1, General Requirements, and other provisions and requirements of the contract documents apply to work of Division 27 – Technology Infrastructure.
6. Each section included in Division 27 – Technology Infrastructure incorporates this section by reference and is incomplete without the provisions stated herein.
7. Coordinate work included in other Divisions, which affect the work in this Division

B. Project Overview:

1. Technology Overview
   a) The Telecommunications System for this project will be comprised of several components including the structured cabling system (SCS). These components, as well as other related components, will be discussed individually in the following sections.
   b) The related components of the telecommunication system include grounding / bonding, MEP requirements, architectural requirements, as well as interfacing with other systems such as security and building automation.
   c) The telecommunications system design will be based on the Telecommunications Industries Association (TIA) standards as well as Building Industry Consulting Services, Inc. (BICSI) standards. In addition, the design will comply with Ft Bend County IT standards.
   d) All communications installation shall follow ANSI/TIA and BICSI recommendations and standards.

C. Cable Infrastructure

1. The telecommunications cabling infrastructure will consist of backbone cables, horizontal cables, connectors, raceways and other items as listed below.
2. Backbone Cables:

a) The Telecommunication Backbone System will consist of singlemode fiber optic cable. Singlemode fiber will be used to connect the IT Building to the existing Emergency Operations Center (EOC) as part of a different project.

D. Cable Terminations:

1. Fiber Optic Cables:
   a) All fiber connectors will be LC-type. The 2RU shelves terminate up to 144 strands of fiber using duplex LC fusion-splice connectors. All pigtail, fan out kits and tight buffer slack shall be housed in slack cassettes within. Mechanical splices are not permitted.
2. Horizontal Cables:
   a) All horizontal cabling on this project will be Cat 6 rated, minimum. This project will utilize a VoIP voice system. Therefore, all cables will be considered data cables and terminate in patch panels in the designated IDF/MDF Rooms. Two (2) Cat 6A cables will be installed to each wireless access points (WAP).
3. Horizontal Cable Terminations:
   a) The SCS will utilize Cat 6 or Cat 6A rated patch panels. The patch panels will include 110-style terminations on the rear and RJ-45 ports on the front with space for unique labels to identify each port. All Cat 6A cables will terminate on Cat 6A patch panels and all Cat 6 cables will terminate on cat 6 rated patch panels installed in the equipment racks.
4. Cable Testing:
   a) All backbone fiber optic cables will be tested with power meter and OTDR testing following industry guidelines. All horizontal copper cables will be tested for permanent link test and component test.
5. Cable Warranty:
   a) The SCS will have a minimum warranty of 15+ years which is standard industry practice for high performance cable systems that are installed in compliance with technology guidelines for the performance standards, materials and installation.

E. Cabling Infrastructure Pathways

1. All horizontal and backbone cable routes shall be installed in conduit or cabletray only. Cable hangars will not be allowed. All backbone cable pathway from the MDF to an IDF supporting the IT operations will be installed in redundant pathways.
2. The cabletray for this facility will be wire mesh tray under raised access floors and cable tray in the main corridor spaces. Conduit will route from work area outlet to accessible ceiling. Conduits shall be bonded to the cable tray using compression connectors with bonding fitting and #6 AWG green insolated wire. Conduits shall be no less than 1", however sized appropriately to maintain industry standard fill ratios (40% fill ratio minimum).
3. Conduits shall not extend more than 100 feet in any one continuous run without a pull-box. Communication conduits shall not exceed a total of 180-degrees bend radius without installation of a pull box. Pull box sizing shall be based on conduit sizes and fill ratios. Conduits should enter and exit pull boxes on opposite ends of the box. Pull boxes should not be utilized as 90-degree bends.

4. All conduits shall be marked to identify the type of communications pathway. Markings to occur every 10 feet. Method on how conduits will be identified shall be submitted by the contractor to the Engineer or to Ft Bend for approval. In addition to conduit type markings, each conduit entering an MDF or IDF Room must have a destination label if other than the corridor cabletray system.
5. Conduits shall be EMT or Rigid steel conduit. No plastic or plastic-based materials can be used for interior pathways. Underground pathways will utilize schedule 40 PVC and will be concrete-encased. All communication conduits shall utilize compression fittings, reamed and threaded bushings installed.

1.2 REFERENCES

A. Section 01

B. Section 270000: Communications

C. Section 270526: Telecommunication Grounding and Bonding

D. Section 270528: Interior Communications Pathways

E. Section 270543: Exterior Communication Pathways

F. Section 270553: Testing, Administration, Identification

G. Section 271100: Communication Cabinet and Equipment Rooms

H. Section 271300: Backbone and Riser Media Infrastructure

I. Section 271500: Horizontal Media Infrastructure

J. Section 272100: Data Communication and Network Equipment

K. Section 280500: Electronic Safety and Security

L. Section 281300: Access Control System (ACS)

M. Section 282300: Digital Video Surveillance Systems (DVSS)

N. Telecommunications Industry Association (TIA) 568B- Commercial Building Telecommunications Cabling Standard.

O. National Electrical Manufacturers Association (NEMA).

P. American Society for Testing Materials (ASTM).

Q. National Electric Code (NEC).

R. Institute of Electrical and Electronic Engineers (IEEE).

S. International Standards Organization/International Electromechanical Commission (ISO/IEC) DIS 11801, latest edition.

T. Underwriters Laboratories (UL) Cable Certification and Follow Up Program.

U. Occupational Safety and Health Administration (OSHA) 29 CFR Part 1910, Permit-Required Confined Spaces for General Industry; Final Rule.
Drawings and general provisions of the Contract, including General and Supplementary Conditions, and Division 01 General Requirements Specification Sections, apply to this Section.

1.3 SUBMITTALS

A. Follow Section 013300 – Submittal Procedures and the following:

B. All submittals must contain a table of contents listing all products to be reviewed. All cutsheets must indicate the model number specified by highlighting or arrow or some other method that provides a clear distinction on which model number is chosen.

C. Proposed cable data must be submitted for all copper, fiber, cabinets, cabletrays, grounding and termination equipment. Submitted data shall include, as a minimum:

1. Manufacturer's name.
2. Manufacturer's part numbers, picture, and specifications.
3. Equipment cut sheet.

D. Contractor qualifications: Furnish evidence of meeting the requirements for contractor qualifications specified in this section.

E. Shop drawings indicating the intended cable layout and pulling plan prior to beginning cable pulling.

F. Cable inventory data must be submitted for all copper, fiber, and termination equipment. The contractor is required to submit this data upon initial installation of the new cable plant, prior to the activation of any circuits. The contractor shall maintain an updated cable inventory database of the new cable plant throughout the remaining project duration which shall include the circuit activation data. The contractor shall submit the final active cable inventory at the project close-out. Submit data electronically on data diskettes in "Microsoft Excel 2007" format, listing products furnished, including:

1. Manufacturer's name.
2. Manufacturer's part numbers.
3. Cable numbers utilizing the cable numbering standard.
4. Location and riser assignments.
5. This requirement applies to copper cable, fiber optic cable, and all termination equipment.

G. Record Drawings: Follow Section 017700 – Closeout Procedures, with the exception that a preliminary deliverable will be required as defined above. Furnish CAD drawings of completed work including cable numbers.

1.4 DEFINITIONS AND ABBREVIATIONS

A. Provide: Where the word "provide" is used, the word is understood to mean, "the Contractor shall furnish and install" the equipment, tests, inspections, etc. referenced.

B. Related Work: The sections referenced under the article RELATED SECTIONS are understood to include provisions which directly affect the work being specified in the section where the RELATED SECTIONS article occurs.

C. Concealed: Where the word "concealed" is used in conjunction with raceways, equipment and the like, the word is understood to mean hidden from sight as in chases, furred spaces or suspended ceilings.

D. Exposed: Where the word "exposed" is used, the word is understood to mean open to view.

E. American Wire Gauge – AWG

F. Asynchronous Transfer Mode - ATM

G. Gigabits Per Second – Gbps

H. Main Cross Connect – MC

I. Megabits Per Second - Mbps

J. Polyvinyl Chloride - PVC

K. Structured Cabling System - SCS

L. Telecommunications Room – TR

M. Telecommunication Closet - TC

N. Multimode Fiber Optic Cable – MMF

O. Single-mode Fiber Optic Cable – SMF

P. Intermediate Distribution Frame – IDF

Q. Main Distribution Frame – MDF

R. Not in Contract – NIC

S. Unless Otherwise Noted – UON

T. Refer to: - RE:

U. Typical – TYP

V. Above Finished Grade – AFG

W. With – w/

X. Above Finished Floor – AFF

Y. Telecommunications Main Grounding Busbar – TMGB

Z. Optical Fiber – OF

1.5 ADDITIONAL REQUIREMENTS

A. Integration: Responsibility for overall telecommunications system integration and coordination of work among trades, subcontractors, and suppliers shall rest with Contractor named in construction contract issued by Owner's Representative. Work covered by this division of specifications shall be coordinated with related work indicated on drawings or specified elsewhere under project specifications. Work related to telecommunications system shall be performed under direct supervision of telecommunications system installer in a manner approved by product manufacturer.

B. Coordination of work: Contractor shall be responsible for coordination of work among project specification divisions and contractor/subcontractors involved in this project. This coordination of Work Includes following instructions provided the Construction Manager or General Contractor if project is managed by such. See section 270000 for additional information.

C. General compliance requirements: Provide a complete and operable system in compliance with project drawings, specifications, referenced standards, applicable building codes, and Authority Having Jurisdiction (AHJ) requirements. Scope of this contract includes planning, design, materials, equipment, labor, configuration, programming, testing, startup and commissioning services, and documentation costs for complete and operable system that meets all requirements indicated on drawings or contained in specifications. Comply with all contract documents, specifications, drawings, manufacturer's instructions, and Owner and AHJ requirements. In case of conflict among applicable documents or standards, contractor shall notify owner's representative in writing of apparent conflict, and then comply with most stringent requirements unless otherwise directed in writing from owner's representative. Work Includes all items required for complete system whether or not identified in specification or drawings.

D. Information about general construction and architectural features and finishes shall be derived from structural and architectural drawings and specifications only.

E. Items referred to in singular number in Contract Documents shall be provided in quantities necessary to complete work.

F. Work related to telecommunications system shall be installed by an SCS manufacturers authorized or certified trained installer and supervised an SCS manufacturers authorized or certified SCS Engineer. Owner reserves the right to review and approves any personnel assigned to this project in a supervisory or managerial role.

G. SCS contractor shall have had at least 10 years of comparable experience with telecommunications projects. As part of the proposal, SCS installer shall submit at least three (3) comparable Project reference descriptions with reference contacts. Comparable projects shall equal or exceed size and complexity of work on drawings.

H. Complete and usable work: Refer to and comply with requirements in section 27 00 00 outlined below.

1.6 RELATED DOCUMENTS AND DRAWINGS

A. General: The project drawings and general conditions of Contract shall apply to this section.

B. Drawings are generally diagrammatic and are intended to encompass a system that will not interfere with the structural and architectural design of the building. Coordinate the work to avoid interferences between conduit, equipment, architectural and structural work.

C. Coordinate with architectural features, trim and millwork details, and install equipment in cabinets or other special areas as directed by A/E.

D. Drawings are based on equipment specified as the ‘basis of design’. Make adjustments, modifications or changes required, due to use of other equipment, at no additional compensation.

E. Coordination: Coordinate with work specified in other sections and divisions of specifications.

F. Reference: Codes and standards as referenced in Section 27 00 00 may define additional specifications or requirements not specifically called out within this division. However, contractor shall adhere to most stringent requirements as defined herein, or as defined by reference within section 270000.

G. Architectural and Engineering specifications may have additional conditions or requirements that affect the work defined by this division of specifications. Contractor shall be responsible for the coordination of all conditions and other trade requirements that may impact schedule, scope of work, work progress, or other factors that may affect the overall ability for contractor to execute the requirements of this division of specifications.

1.7 CODES AND STANDARDS

A. General: All work, including but not limited to: cabling, pathways, support structures, wiring, equipment, installation and workmanship shall comply with the latest editions of the requirements of the Authority Having Jurisdiction (AHJ), National Electrical Code, National Electrical Safety Code, all applicable local rules and regulations, equipment manufacturer's instructions, and the National Electrical Contractor's Association (NECA) Standard of

Installation. In case of discrepancy or disagreement between the documents noted above, the Contractor shall satisfy the most stringent requirements.

B. Other sections of this document contain References to Codes and Standards that are applicable to the section.

C. Codes

1. Insulated Cable Engineers Association (ICEA)
    a) ANSI/ICEA S-80-576-2002, Category 1 & 2 Individually Unshielded Twisted-Pair Indoor Cables for Use in Communications Wiring Systems, (latest revision)
    b) ANSI/ICEA S-84-608-2002, Telecommunications Cable, Filled Polyolefin Insulated Copper Conductor, (latest revision).
    c) ICEA S-102-700-2004, ICEA Standard for Category 6 Individually Unshielded Twisted-Pair Indoor Cables for Use in LAN Communication Wiring Systems Technical Requirements, (latest revision)
    d) ANSI/ICEA S-90-661, Category 3, 5, & 5e Individually Unshielded Twisted-Pair Indoor Cable for Use in General Purpose and LAN Communication Wiring Systems, Latest Revision

2. National Fire Protection Association (NFPA)
    a) NFPA 70, National Electrical Code® (NEC®), (latest revision)
    b) NFPA 70E, Standard for Electrical Safety Requirements for Employee Workplaces, (latest revision)
    c) NFPA 72, National Fire Alarm Code®, (latest revision)
    d) NFPA 75, Standard for the Protection of Electronic Computer/Data Processing Equipment, (latest revision)
    e) NFPA 76, Recommended Practice for the Fire Protection of Telecommunications Facilities, (latest revision)
    f) NFPA 90A, Standard for the Installation of Air Conditioning and Ventilating Systems, (latest revision)
    g) NFPA 101, Life Safety Code®, 2006
    h) NFPA 255, Standard Method of Test of Surface Burning Characteristics of Building Materials, (latest revision)
    i) NFPA 262, Standard Method of Test for Flame Travel and Smoke of Wires and Cables for Use in Air-Handling Spaces, (latest revision)
    j) NFPA 780, Standard for the Installation of Lightning Protection Systems, (latest edition)
    k) NFPA 5000™, Building Construction and Safety Code, (latest revision)

3. Institute of Electrical and Electronics Engineers (IEEE)
    a) I IEEE C2 - National Electrical Safety Code, (latest revision)

D. Reference Standards

1. Institute of Electrical and Electronics Engineers (IEEE)
    a) IEEE/ANSI 142 communication Wiring Systems, (latest revision)
    b) ANSI J-STD-607, Commercial Building. Grounding/Bounding Requirements-Joint Standard for Commercial Building Grounding (Earthing) and Bonding Requirements for Telecommunications, (latest revision).
    c) IEEE 1100, Recommend `ed Practice for Powering and Grounding Sensitive Electronic Equipment (latest revision).
    d) UL 467 Electrical Grounding and Bonding Equipment, (latest revision)
    e) IEEE 802.1 - High-Level Interface, (latest revision)
    f) IEEE 802.2 - Logical Link Control, (latest revision)
    g) IEEE 802.3 - Carrier Sense Multiple Access with Collision Detection, (latest revision)
    h) IEEE 802.8 - Fiber Optics, (latest revision)
    i) EEE 802.9 - Integrated Services LAN, (latest revision)
    j) IEEE C2 - National Electrical Safety Code, (latest revision)

2. Telecommunications Industry Association (TIA):
    a) TIA TSB-125, Guidelines for Maintaining Optical Fiber Polarity Through Reverse-Pair Positioning, (latest version)
    b) TIA TSB-140, Additional Guidelines for Field-Testing Length, Loss and Polarity of Optical Fiber Cabling Systems (latest version)
    c) TIA-526-7, Measurement of Optical Power Loss of Installed Single-Mode Fiber Cable Plant – OFSTP-7, (latest revision)
    d) TIA-526-14 (OFSTP-14), Optical Power Loss Measurements of Installed Multimode Fiber Cable Plant (latest revision)
    e) ANSI/TIA-250 Electrical Performance for Television Transmission Systems, (latest revision)
    f) TIA-568.0, Generic Telecommunications Cabling for Customer Premises, (latest revision)
    g) TIA-568.1, Commercial Building Telecommunications Cabling Standard Part 1: General Requirements, (latest revision)
    h) TIA-568.2, Commercial Building Telecommunications Cabling Standard—Part 2: Balanced Twisted Pair Cabling Components, (latest revision)
    i) TIA-568.3, Optical Fiber Cabling Components Standard, (latest revision)
    j) ANSI/TIA-568.4–2011, Broadband Coaxial Cabling and Components Standard, (latest revision)
    k) TIA-569, Commercial Building Standards for Telecommunications Pathways and Spaces, (latest revision.)
    l) ANSI/TIA-598, Optical Fiber Cable Color Coding, ((latest revision)
    m) ANSI/TIA-604, Fiber Optic Connector Intermateability Standard, (latest version)
    n) TIA-606, Administration Standard for Commercial Telecommunications Infrastructures, (latest revision)
    o) ANSI/TIA-570, Residential Telecommunications Infrastructure Standard, (latest version)
    p) ANSI/TIA-758, Customer-owned Outside Plant Telecommunications Infrastructure Standard, (latest version)
    q) ANSI/TIA-854, A Full Duplex Ethernet Specification for 1000 Mb/s (1000BASE-TX) Operating over Category 6 Balanced Twisted-Pair Cabling, (latest version)

r) TIA-862, Building Automation Systems Cabling for Commercial Buildings, (latest version)
s) TIA-942, Telecommunications Infrastructure Standard for Data Centers, (latest version).
t) Category TSB-155, Guidelines for the Assessment and Mitigation of Installed 6 Cabling to Support 10GBASE-T, (latest version)
u) ANSI/TIA-1005, Telecommunications Infrastructure Standard for Industrial Premises (latest version)
v) ANSI/TIA-1152, Requirements for Field Test Instruments and Measurements for Balanced Twisted-Pair Cabling, (latest version)
w) TIA 72 Centralized Optical Fiber Cabling Guidelines
x) ANSI/TIA-1179, Healthcare Facility Telecommunications Infrastructure Standard, (latest revision)
y) ANSI/TIA-1183, Test Fixtures for Balun-Less Measurements of Balanced Components and Systems (latest revision)

3. American National Standards Institute (ANSI):
a) ANSI C80.1 - Rigid Steel Conduit, Zinc Coated.
b) ANSI J-STD-607, Commercial Building Grounding (Earthing) and Bonding Requirements for Telecommunications, (latest version)
c) ANSI X3T9.5, Requirements for UTP at 100 Mbps, (latest revision)
d) ANSI/NECA/BICSI 568-2006, Standard for Installing Telecommunications Systems, (latest version)

4. Other DIS 11801Reference Materials
a) ANSI/NECA/GICSI-568, Standard, Installing Commercial Building Telecommunications Cabling, (latest revision)
b) BICSI Outside Plant Design Reference Manual (COOSP), (latest revision)
c) BICSI Electronic Safety and Security Reference Manual (ESSDRM), current edition
d) BICSI Information Transport Systems Installation Methods Manual (ITSIM), (current edition)
e) BICSI Network Design Reference Manual (NDRM), (current edition)
f) BICSI Telecommunications Distribution Methods Manual (TDMM), current edition
g) BICSI Wireless Design Reference Manual (WDRM), (current edition)
h) Institute of Electrical and Electronic Engineers (IEEE), (current edition)
i) National Electrical Manufacturers Association (NEMA), (current edition)
j) Underwriters Laboratories (UL) Cable Certification and Follow Up Program, (current edition)
k) ANSI/BICSI 002-2011, Data Center Design and Implementation Best Practice, (latest revision)
l) ANSI/BICSI 002-2011, Data Center Design and Implementation Best Practice, (latest revision)

A. American Society for Testing and Materials:

1. ASTM A48 - Standard Specification for Gray Iron Castings, (current edition)
2. ASTM A48M - Standard Specification for Gray Iron Castings (Metric), (current edition)
3. ASTM C857 - Standard Practice for Minimum Structural Design Loading for Underground Precast Concrete Utility Structures, (current edition)
4. ASTM C858 - Standard Specification for Underground Precast Concrete Utility Structures, (current edition)
5. ASTM C891 - Standard Practice for Installation of Underground Precast Concrete Utility Structures, (current edition)
6. ASTM C1037 - Standard Practice for Inspection of Underground Precast Concrete Utility Structures, (current revision)
7. ASTM B633 – specification for Electro-deposit Coating of Zinc on iron and Steel, (current revision)
8. ASTM A653 – Specification for Steel Sheet, Zinc-Coated by the Hot-Dip Process, (current revision)
9. ASTM A123 - Specification for Zinc (Hot-Galvanized) Coatings on Products Fabricated from Rolled, Pressed, and Forged Steel Shapes, Plates, Bars, and Strip, (current revision)
10. ASTM A1011 - Specification for Steel, Sheet and Strip, Hot-Rolled, Carbon, Structural, High-Strength Low-Alloy and High Strength Low Alloy with Improved Formability (Formerly ASTM A570 &A607), (current revision)
11. ASTM A1008 – Specification for Steel, Sheet, Cold-Rolled, Carbon, Structural, High-Strength Low-Alloy and High-Strength Low-Alloy with Improved Formability (Formerly ASTM A611, (current revision))

B. National Electrical Manufacturers Association:

1. NEMA FB 1 - Fittings, Cast Metal Boxes, and Conduit Bodies for Conduit and Cable Assemblies, (latest revision)
2. NEMA TC 2 - Electrical Polyvinyl Chloride (PVC) Tubing and Conduit, (latest revision)
3. NEMA TC 3 - PVC Fittings for Use with Rigid PVC Conduit and Tubing, (latest revision)
4. NEMA TC 6 - PVC and ABS Plastic Utilities Duct for Underground Installation, (latest revision)
5. NEMA TC 9 - Fittings for ABS and PVC Plastic Utilities Duct for Underground Installation, (latest revision)
6. NEMA TC 10 - PVC and ABS Plastic Communications Duct for Underground Installation, (latest revision)
7. NEMA TC 14 - Filament Wound Reinforced Thermosetting Resin Conduit and Fittings, (latest revision)
8. NEMA VE 1 - Metal Cable Tray System, (latest revision).
9. NEMA VE 2 - Cable Tray Installation Guidelines, (latest revision)

C. ITU-T - International Telecommunications Union - Telecom

1. X.25 (ISO 8208) Packet-Switching Network Interface, (latest revision)
2. X.200 (ISO 7498) OSI Reference Model, (latest revision)
3. X.700 (ISO 9595) Common Management Information Protocol (CMIP), (latest revision)

D. Physical Security Interoperability Alliance (PSIA), (latest revision)

1. Physical Security Interoperability Alliance (PSIA) Ver. 1.0, (latest revision)

E. Open Network Video Interface Forum (ONVIF), (latest revision)

1. Open Network Video Interface Forum (ONVIF) Ver. 2.10, (latest revision)

F. Underwriters Laboratories Inc., (latest revision)

1. UL 651 - Type EB and A Rigid PVC Conduit and HDPE Conduit, (latest revision)

1.8 ABBREVIATIONS, ACRONYMS AND DEFINITIONS

A. Abbreviations and Acronyms

a)	ACD	Automatic Call Distribution
b)	AFF	Above Finished Floor
c)	ANSI	American National Standards Institute
d)	ATM	Asynchronous Transfer Mode
e)	AWG	American Wire Gauge
f)	BD	Building Distributor
g)	BICSI	Building Industry Consulting Services International
h)	CAT5	Category 5 Copper Cable
i)	CAT5e	Category 5e Copper Cable
j)	CAT6	Category 6 Copper Cable
k)	CAT6A	Category 6A Copper Cable
l)	CDDI	Copper Distributed Data Interface
m)	CMP	Communications Multipurpose Plenum: cable rating
n)	CMR	Communications Multipurpose Riser: cable rating
o)	ELFEXT	Equal-Level Far-End Crosstalk
p)	FD	Floor Distributors
q)	FEXT	Far End Crosstalk
r)	Gbps	Gigabits per second
s)	HVAC	Heating, Ventilation, and Air Conditioning
t)	IDF	Intermediate Distribution Frame - Termination frames, relay racks, and cable management
u)	IEEE	The Institute of Electrical and Electronics Engineers
v)	IM	Information Management
w)	ISDN	Integrated Services Digital Network
x)	ISO	International Organization for Standardization
y)	LAN	Local Area Network
z)	Mbps	Megabits per second
aa)	MDF	Main Distribution Frame, consisting of carrier entrance rooms and head-end
bb)	MMF	Multi-mode fiber optics, 50 or 62.5 micron laser optimized core
cc)	MIMO	Multiple-In and Multiple-Out
dd)	Multi-path	The possible multiple routes of a single source of RF energy due to reflection, refraction, or diffraction.

ee)	MUTOA	Multi-User Telecommunications Outlet Assembly
ff)	NEC	National Electrical Code
gg)	NEMA	National Electrical Manufacturing Association
hh)	NEXT	Near End Cross Talk
ii)	NRTL	Nationally Recognized Testing Laboratories
jj)	OSHA	Occupational Safety and Health Act
kk)	PBX	Private Branch Exchange: telephone switch
ll)	PDS	Premises Distribution Systems (See SCS.)
mm)	PoE	Power over Ethernet (IEEE 802.3af)
nn)	POP	Point of Presence
oo)	PSACR	Power Sum Attenuation-to-Crosstalk Ratio
pp)	PSAFEXT	Power Sum Alien Far-End Crosstalk
qq)	PSAELFEXT	Power Sum Alien Equal Level Far-End Crosstalk
rr)	PSANEXT	Power Sum Alien Near-End Crosstalk
ss)	PSELFEXT	Power Sum Equal Level Far-End Crosstalk
tt)	PSNEXT	Power Sum Near-End Crosstalk
uu)	RF	Radio Frequency: Signal generated by a radio transmitter and sent out through an antenna. The frequency of the transmission is described in terms of the number of cycles per second or Hertz (Hz).
vv)	SCC	Security Command Center
ww)	SCS	Structured Cabling System, or Structure Connectivity System; a complete cabling system
xx)	SFF	Small Form Factor
yy)	SFP	Small Form-Factor Pluggable – Hot-pluggable transceiver used for both telecommunication and data communication applications. Comes in both copper and fiber.
zz)	SMF	Single-mode fiber optics, 8.3 micron core
aaa)	SNMP	Simple Network Management Protocol
bbb)	TC	Telecommunications Closet
ccc)	TE	Telecommunications Enclosure
ddd)	TEF	Telecommunications Entrance Facility
eee)	TIA	Telecommunications Industry Association
fff)	TR	Telecommunications Room
ggg)	TO	Telecommunications Outlet
hhh)	TWC	Time Warner Cable - Owner
iii)	UPS	Uninterruptible Power Supply
jjj)	UTP	Unshielded Twisted Pair
kkk)	VoIP	Voice over Internet Protocol
lll)	WAO	Work Area Outlet
mmm)	WAN	Wide Area Network
nnn)	WAP	Wireless Application Protocol
ooo)	WPA/WPA2	WiFi Protected Access / WiFi Protected Access II – IEEE 802.11i-2004

1.9 DEFINITIONS

A. Access Floor - A floor system that has removable floor panels.

B. Building Backbone Cabling – Cabling used to connect Floor Distributors (FD) or other local collection points to the Building Distributor (BD). Building backbone cabling typically carries aggregate traffic and, as such, impacts multiple network devices and users. Building backbone cabling may include either fiber optic or copper cabling or both.

C. Building Distributor (BD) – Termination point from which all building backbone cabling emanates and interconnection point for the network backbone. Commonly referred to as BDF in Americas, Main Comms Room in EMEA and Communication Room, IT Lab or IT Room in AsiaPac. Referred to as BD in international and European industry standards and Intermediate Cross-connect (IC) in American industry standards. There is one BD for each building and it feeds all FD's in the same building. The BD should be located so that all FD's served are within 300 cable meters (984 cable feet). All BD's are linked to the

D. Campus Backbone Cabling – Cabling used to connect Building Distributors (BD) or other key network segments to the Campus Distributor (CD). With rare exceptions, campus backbone cabling carries aggregate traffic and typically impacts entire buildings worth of network devices and users and, as such, link redundancy with diverse routing is highly recommended. Campus backbone cabling almost exclusively consists of fiber optic cabling. Copper cabling may be used in short-distance (< 90m) applications. In such cases, lightning protection will usually be required by code.

E. Campus Distributor (CD) – Termination point from which all campus backbone cabling emanates and highest-level interconnection point for the network backbone. Commonly referred to as NOC in Americas and Main Comms Room in EMEA. Referred to as CD in international and European industry standards and Main Cross-connect (MC) in American industry standards. On smaller campuses, there is one CD for the campus. On larger campuses there might be several CD's with each CD serving several buildings. Besides linking to each of the BD's it serves, the CD is also the network interconnection point for data center links and links to service providers.

F. Category 3 (Cat 3) – A category of transmission performance, defined in TIA standards, that specifies electrical properties up to 10 MHz. Cat 3 is the minimum performance grade permissible and is used typically for analog voice distribution.

G. Category 5e (Cat 5e) / Class D – A category/class of transmission performance that specifies electrical properties up to 155.5 MHz. Capable of supporting copper-based, four-pair Gigabit Ethernet (IEEE 802.3ab 1000BASE-T) applications. Category 5e is defined in TIA 568B.2 standard. Class D is defined in the ISO 11801 standard.

H. Category 6 (Cat 6) / Class E – A category/class of transmission performance that specifies electrical properties up to 250 MHz. Refer to the TIA 568B family of standards for more information on Category 6 and ISO/IEC 11801 for more information on Class E requirements. Also refer to CENELEC EN50173.

I. Category 6A (Cat 6) / Class EA– A category/class of transmission performance that specifies electrical properties up to 500 MHz and capable of supporting data applications operating at

10Gbps. Refer to the TIA 568B family of standards for more information on Category 6 and ISO/IEC 11801 for more information on Class EA requirements.

J. Certification – The testing and documentation of the transmission performance (e.g., Category 5e / Class D) of a permanent link or channel, based on sweep frequency (where applicable) testing of numerous parameters with results compared to a range of acceptable values. This project requires 100% certification (with documentation) of all permanent link cabling at the time of installation. Channel certification is optional and is the responsibility of the group using the channel.

K. Channel – The entire physical pathway between active equipment ports, inclusive of all patch cords, patch panels, jacks and cabling segments.

L. Class C – A category of transmission performance, defined in ISO and EN standards, that specifies electrical properties up to 16 MHz

M. Conduit - A raceway of circular cross-section.

N. Entrance Facility (EF) – Termination point of service provider cables that have entered the building and location of service demarcation point (MPOE) and interconnection point to the network. Commonly referred to as Telco Room in Americas, POP Room in EMEA and Building Entrance in AsiaPac. Referred to as Building Entrance Facility in international and European industry standards and Entrance Facility (EF) in American industry standards. The EF is linked to the CD, where present, or to the BD.

O. Floor Distributor (FD) – Termination point for horizontal cabling and interconnection point for network access. Commonly referred to as IDF in Americas and AsiaPac and as Sub Comms Room in EMEA. Referred to as Floor Distributor (FD) in international and European industry standards and Horizontal Cross-connect (HC) - FD quantities and locations are determined by building size and geometry so that all points served are within 90 cable meters (295 cable feet) of an FD. The FD feeds all Telecommunications Outlets (TO’s) in its service zone. All FD’s in a building are linked to the building’s Building Distributor (BD) via backbone cabling.

P. Horizontal Cabling – Cabling used to connect individual work area outlets to local Floor Distributors (FD) or other collection points. Unlike backbone cabling, horizontal cabling does not typically carry aggregate traffic and, as such, impacts only single network devices or users. In buildings, horizontal cabling almost exclusively consists of copper cabling. Fiber optic cabling may be used where situations dictate but, unlike horizontal copper cabling, horizontal fiber optic cabling is not installed in advance as default building facilities. At this writing, horizontal copper cabling in many networks is capable of supporting Gigabit (1Gb/s) Ethernet applications as well as other applications of similar bandwidth.

Q. Permanent Link – A stationary cabling segment, consisting of the permanently installed cable and the permanently affixed jack at both ends (typically at the outlet faceplate and closet patch panel, or on a patch panel on both ends). The concept is based on the assumption that, while patch cords might be disconnected or moved over time, the permanent cable and jacks will not be disturbed, and the electrical characteristics of the permanent link will remain unaltered.

R. Plenum - A space within the building designed for the movement of environmental air; i.e., a space above a suspended ceiling or below an access floor.

S. Raceway - Any channel designed for holding wires or cables; i.e. conduit, electrical metal tubing, busways, wireways, ventilated flexible cableway.

T. Spine – also called a backbone, the main communications cables in an IDF.

1.10 CONTRACT DRAWINGS

A. Drawings are generally diagrammatic and are intended to encompass a system that will not interfere with the structural and architectural design of the building. Coordinate the work to avoid interferences between conduit, equipment, architectural and structural work.

B. Coordinate with architectural features, trim and millwork details, and install equipment in cabinets or other special areas as directed by A/E.

C. Drawings are based on equipment specified as the 'basis of design'. Make adjustments, modifications or changes required, due to use of other equipment, at no additional compensation.

1.11 PROJECT DRAWINGS

A. General Drawing Specifications: Detail and elevation drawings shall be D size (24" x 36") with a minimum scale of 1/4" = 1'0" or larger. ER, TR and other enlarged detail floor plan drawings shall be D size (24" x 36") with a minimum scale of 1/4" = 1'0" or larger. Building composite floor plan drawings shall be D size (24" x 36") with a minimum scale of 1/8" = 1' 0".

B. Building composite floor plans: Provide building floor plans showing outlet locations and jack configuration, types of jacks, run distance for each jack cable, and cable routing/locations. Identify TO's that, according to location and available pathway systems, require cable length greater than allowed by standards. Recommend alternatives for Owners Representative's consideration.

C. Telecommunications space plans/elevations: Include enlarged floor plans of TRs indicating layout of equipment and devices, including receptacles and grounding provisions. Submit detailed plan views and elevations of telecommunications spaces showing racks, termination blocks, and cable paths.

D. Logical Drawings: Provide logical riser or schematic drawings for all systems. Include schematic symbol key.

1.12 SUBSTITUTIONS

A. Substitution requests: Substitution requests will be considered only if submitted to Owner's Representative not less than 7 working days prior to project bid date. Acceptance or rejection of proposed substitution is at Owner's Representatives sole discretion. No exceptions. Requests for substitutions shall be considered not approved unless approval is issued in writing by Owner's Representative.

B. Rejection: For equipment, cabling, wiring, materials, and all other products indicated or specified as no substitutions or no alternates, Owner does not expect nor desire requests for substitutions and alternate products other than those specified. Owner reserves right for Owner's Representative to reject proposed substitution requests and submissions of alternates without review or justification.

1.13 PRE-INSTALLATION MEETING

A. General: After award, convene a pre-installation meeting at least 14 calendar days prior to commencing SCS and related work. The meeting must be scheduled at least 14 days in advance. Require attendance of parties directly affecting work of this section, including other trades and utilities if necessary. Review conditions of operations, procedures and coordination with related work.

B. Agenda: Comply with following agenda specifications:

1. Tour, inspect, and discuss building conditions relating to telecommunications system cabling and equipment, coordination with Telephone Utility Company, Owner's telecommunications system requirements, and coordination with existing conditions and other work in contract.
2. Review exact location of each item within building construction, casework, and fixtures, and their requirements.
3. Review required submittals, both completed and yet to be completed.
4. Review drawings and specifications.
5. Review proposed equipment, cabling, and related work.
6. Review and finalize construction schedule related to telecommunications system and verify availability of materials, personnel, equipment, and facilities needed to make progress and avoid delays.
7. Review required inspections and testing.
8. Review cable routing and support provisions.

1.14 SAFETY

A. The contractor shall follow the safety procedures.

B. The contractors shall be responsible for training all personnel under their employ in areas concerning safe work habits and construction safety. The contractor shall continually inform personnel on hazards particular to this project and update the information as the project progresses.

1.15 QUALITY ASSURANCE

A. Follow Part 3 EXECUTION of Specifications:

1. Section 01
2. Section 263353: Telecommunications Uninterruptible Power Supply (UPS)
3. Section 270000: Communications
4. Section 270526: Telecommunication Grounding and Bonding
5. Section 270528: Interior Communications Pathways
6. Section 270543: Exterior Communication Pathways
7. Section 270553: Identification and Labeling of Communication Infrastructure
8. Section 271100: Communication Room Fittings
9. Section 271300: Backbone and Riser Media Infrastructure
10. Section 271500: Horizontal Media Infrastructure
11. Section 272100: Data Communication Network Equipment
12. Section 280500: Electronic Safety and Security
13. Section 281300: Access Control System (ACS)
14. Section 282300: Digital Video Surveillance System (DVSS)

B. Follow Section 014000 – Quality Requirements and the following.

C. Perform work in accordance with the latest editions, revisions, amendments or supplements of applicable statutes, ordinances, codes or regulations of Federal, State and Local Authorities having jurisdiction in effect on the date bids are received. .

D. Where approval standards have been established by OSHA, Underwriter's Laboratories, ASME, AGA, AMCA, ANSI, ARI, NFPA 70, State Fire Insurance Regulatory Body, and FM, these standards shall be followed whether or not indicated on the Contract Drawings and Specifications. Include the cost of all work required to comply with the requirements of these authorities in the original proposal. Comply with ANSI C2 where applicable.

E. Comply in every way with the requirements of local laws and ordinances, the National Board of Fire Underwriters, and the National Electrical Code. Anything in the plans or specifications that does not strictly comply with the above laws, ordinances, and rules must be referred to the attention of the Engineer for a decision before proceeding. No change in the plans or specifications shall be made without full consent in writing of the Engineer.

F. Monitor and maintain quality control over manufacturers, suppliers, subcontractors, work force, site conditions, products, and services to ensure Work is of specified quality.

G. All communications work shall be performed under the direct on-site supervision of a Building Industry Consulting Service International, Inc. (BICSI) Certified Registered Communications Distribution Designer (RCDD). Submit resumes and RCDD registration to the Architect as proof. Paperwork must be approved by the Architect in writing prior to construction. The RCDD must be at the job site during construction. The RCDD shall be present during all cable testing, pulling and termination procedures.

H. Provide all materials, equipment, and installation in compliance with the latest applicable standards from ANSI, FCC, ASTM, TIA, IEEE, NEC, NFPA, NEMA, REA, and UL.

I. Requirements in reference specifications and standards are minimum for all equipment, material and work. In instances where capacities, size or other features of equipment, devices or materials exceed these minimums, meet listed or shown capacities.

J. Resolve any code violation discovered in contract documents with the A/E prior to award of the contract. After award of the contract, make any correction or addition necessary for compliance with applicable codes at no additional compensation.

1. Arrange with local and state authorities and utility companies for permits, fees and service connections, verifying locations and arrangement, and pay all charges including inspections.

K. Contractor Qualifications:

1. Must be a certified and currently registered company capable of issuing a numbered registration certificate for the entire cable system from the installed cable/connector manufacturer. Certification must be in effect throughout the duration of the communication system installation, testing, documentation and acceptance.
2. Must be supervised on-site by a BICSI RCDD. Must demonstrate knowledge and compliance with all BICSI, ANSI, TIA, UL, NEBS and NEC standards and codes.
3. All members of the installation team must be certified by the manufacturer as having completed the necessary training to complete their part of the installation. Resumes of the entire team should be provided along with documentation of completed training courses.
4. The Installation Supplier shall demonstrate that they have a documented program for qualifying an installer on specific work activities and systems related to the skill level requirements indicated in this section.
5. The Installation Supplier shall use the installers years of experience in a specific system(s)/environment(s) and their demonstrated ability to perform work operations/job functions associated with equipment installation or removal activities and formal education in a related accredited curriculum in assigning skill levels.
6. In this section a "certificate of completion" from a training facility or "appropriate curriculum" are considered specific training for a piece of equipment or a procedure. The Installation Supplier shall have documented records for each installer identifying training successfully completed. As a minimum, the following training: AC/DC theory, equipment grounding, generic central office installation, BICSI installation training, power fundamentals, safety, required federal state and local standards and OSHA requirements are recommended subjects.
7. Five (5) years experience in the installation of fiber optic cables, including splicing, terminating and testing. Testing on fiber optic cable shall include single and multimode.
8. Three (3) years experience in the installation of Category 3 and Category 5 or greater Unshielded Twisted Pair copper cables for voice and data distribution systems, including splicing, terminating and testing. Testing on Category 3 and Category 5 copper cable shall include complete verification with TIA cable standards.
9. Five (5) references for project of equivalent scope, type and complexity of work completed within the last five (5) years. The Contractor shall submit as proof, supporting documents and the names, addresses and telephone numbers of the operating personnel who can be contacted regarding the installation system.

L. All components shall be produced by manufacturers who have been regularly engaged in the production of telecommunications cabling components of the types to be installed in this project for a period of five years.

M. All data contractor installation personnel must be BICSI Certified Installer Level I or higher. The onsite supervisor of the data contractor must be a BICSI Certified Technician. The data contractor must have on staff a BICSI Certified RCDD. All certifications must be current. Proof of certification must be presented at the pre-installation meeting.

N. Assure that the "as installed" system is correct and complete per construction documents: including engineering drawings, manuals, and operational procedures in such a manner as to support maintenance and future expansion of the system.

O. Owner/Architect/Engineer retains the right to access and inspect all work during the entire duration of the project and any items that do not adhere to the standards, reference, contract, bid, or project documents will be corrected immediately at the expense of the contractor.

P. UL Compliance: Provide products that are UL-classified and labeled.

Q. Verification: The Owner will maintain inspection personnel on the job site. It is incumbent upon the Contractor to verify that the installation and material used has been inspected before it is enclosed within building features, or otherwise hidden from view. The Contractor shall bear costs associated with uncovering or exposing installations or features that have not been inspected.

R. Equipment Qualifications: The Contractor is to use equipment and rigs designed for pulling, placement and termination of multipair copper cable; including reel trucks, mechanical mules, sheaves, shoes, anchors etc., and equipment for drilling masonry, installing anchors, etc., to install support and cable management hardware.

S. Materials and equipment:

1. Equipment shall be rated for continuous operation under the ambient environmental temperature, humidity, and vibration conditions encountered at the installed location. The equipment shall meet the following requirements:
    a) Interior controlled environment: 60 to 100 degrees F dry bulb and 20 to 90 percent relative humidity, non-condensing.
    b) Interior uncontrolled environment: 0 to 130 degrees F dry bulb and 10 to 95 percent relative humidity, non-condensing.
    c) Exterior environments: Minus 30 degrees to 130 degrees F dry bulb, and 10 to 100 percent relative humidity, condensing.
    d) Hazardous environment: All system components located in areas where fire or explosion hazards may exist because of flammable gas or vapors, flammable liquids, combustible dust, or ignitable fibers or flyings, shall be rated and installed according to Chapter 5 of the NFPA 70 and as shown.

T. Standard products:

1. Equipment and materials shall be standard products of a manufacturer regularly engaged in the manufacture of telecommunications cabling products and shall be the manufacturer’s latest standard design in satisfactory use for at least one year prior to bid opening.
    a) Items of the same classification shall be identical. This requirement includes equipment, modules, assemblies, parts, and components.

U. Perform work in accordance with the latest editions, revisions, amendments or supplements of applicable statutes, ordinances, codes or regulations of Federal, State and Local Authorities having jurisdiction in effect on the date bids are received.

V. Where approval standards have been established by OSHA, Underwriter's Laboratories, ASME, AGA, AMCA, ANSI, ARI, NFPA 70, State Fire Insurance Regulatory Body, and FM, these standards shall be followed whether or not indicated on the Contract Drawings and Specifications. Include the cost of all work required to comply with the requirements of these authorities in the original proposal. Comply with ANSI C2 where applicable.

W. Comply in every way with the requirements of local laws and ordinances, the National Board of Fire Underwriters, and the National Electrical Code. Anything in the plans or specifications that does not strictly comply with the above laws, ordinances, and rules must be referred to the attention of the Engineer for a decision before proceeding. No change in the plans or specifications shall be made without full consent in writing of the Engineer.

X. Monitor and maintain quality control over manufacturers, suppliers, subcontractors, work force, site conditions, products, and services to ensure Work is of specified quality.

Y. All communications work shall be performed under the direct on-site supervision of a Building Industry Consulting Service International, Inc. (BICSI) Certified Registered Communications Distribution Designer (RCDD). Submit resumes and RCDD registration to the Architect as proof. Paperwork must be approved by the Architect in writing prior to construction. The RCDD must be at the job site during construction. The RCDD shall be present during all cable testing, pulling and termination procedures.

Z. Provide all materials, equipment, and installation in compliance with the latest applicable standards from ANSI, FCC, ASTM, TIA, IEEE, NEC, NFPA, NEMA, REA, and UL.

AA. Requirements in reference specifications and standards are minimum for all equipment, material and work. In instances where capacities, size or other features of equipment, devices or materials exceed these minimums, meet listed or shown capacities.

BB. Resolve any code violation discovered in contract documents with the A/E prior to award of the contract. After award of the contract, make any correction or addition necessary for compliance with applicable codes at no additional compensation.

CC. Arrange with local and state authorities and utility companies for permits, fees and service connections, verifying locations and arrangement, and pay all charges including inspections.

DD. Client retains the right to inspect all work during the entire duration of the project and any items that do not adhere to the reference, contract, bid, or project documents will be corrected immediately at the expense of the contractor.

EE. Tests for Insulated Cable: Pass vertical tray flame test following IEEE 383-2.5.

1.16 MATERIALS AND WORKMANSHIP

A. Provide new materials and equipment of a domestic manufacturer by those regularly engaged in the production and manufacture of specified materials and equipment. Where Underwriter's Laboratories or other agency has established standards for materials, provide materials, which are listed and labeled accordingly. The commercially standard items of equipment and the specific names mentioned herein are intended to identify standards of quality and performance necessary for the proper functioning of the work.

B. Perform work by workmen skilled in the trade required for the work. Install all materials and equipment to present a neat appearance when completed and in accordance with the approved recommendations of the manufacturer and the best practices of the trade and in conformance with the Contract Documents.

C. Provide all labor, materials, apparatus, and appliances essential to the complete functioning of the systems described or indicated herein, or which may be reasonably implied as essential whether mentioned in the Contract Documents or not.

D. In cases of doubt as to the Work intended or in the event of need for explanation thereof, make written request for supplementary instructions to A/E.

E. Since manufacturing methods vary, reasonable minor variations are expected; however, performance and material requirements are the minimum standards acceptable. The right to judge the quality of equipment that deviates from the Contract Documents remains solely with A/E.

F. Exterior and interior raceway systems may be installed by a licensed electrical contractor.

G. Cable terminations and testing shall be performed only by the channel solution manufacturers Certified Contractor.

H. If a part number shown in this document has been discontinued or is no longer in production, then the manufacturer's replacement part number shall be used. If there is no replacement part number, then the contractor shall notify the engineer in writing requesting instructions for an approval replacement part number.

1.17 PRODUCT DELIVERY, STORAGE AND HANDLING

A. Follow the manufacturer's directions completely in the delivery, storage, and handling of equipment and materials.

B. Store equipment in a clean, dry place, protected from other construction. While stored, maintain factory wrappings or tightly cover and protect equipment against dirt, water, construction debris, chemical, physical or weather damage, traffic and theft.

C. Adequately brace and package equipment to prevent breakage and distortion while in transit.

1.18 OPERATING INSTRUCTIONS

A. Provide the services of competent representatives of the manufacturer capable of certifying that the equipment is installed according to the manufacturer's recommendations, is operating properly, and to instruct the Owner's operating personnel during start-up and operating tests of the complete telecommunication system. Prove the operation of equipment to the satisfaction of A/E. Give at least seven days' notice to A/E prior to beginning equipment start-up.

B. Certify that these services have been performed by including a properly executed invoice for these services or a letter from the manufacturer.

C. Perform all tests outlined in Division 27.

1.19 SERVICE

A. Remove all excess material and debris. Place all telecommunication systems in complete working order before request for final review. Broom clean all areas.

B. Clean and polish all fixtures, equipment, and materials thoroughly, and return to "as new" condition.

1.20 PROJECT RECORD DOCUMENTS

A. Comply with Section 017700 - Closeout Procedures and the following.

B. Maintain a set of prints of the Contract Documents at the job site for the purpose of recording the final size, location and interrelation of all work under this Division in accordance with Section 017839 – Project Record Documents. Mark-up this set of drawings as the job progresses to indicate "as-built" location of all equipment, including concealed conduit, equipment and the like.

C. Clearly and accurately delineate the work by dimensions on the record drawings as installed, with equipment locations identified by at least two dimensions to permanent structures.

D. The final record drawings shall be marked "AS-BUILT," and signed and dated by a certified representative of the Contractor.

E. At the conclusion of project, provide certified "AS-BUILT" drawings which shall consist of the following:

1. All drawings shall be provided on disk in a form compatible with the agreed upon revision of AutoCad and Revit. A complete set of project plans will be provided to the Contractor on disk. The Contractor will modify the drawings by placing the cable information on a separate layer. All of the requested drawings will be placed on these plans so that all cable routes are to scale and provide accurate information for use in the future when changes are made and the exact location of cables are required to avoid service interruptions.
2. A complete diagram of all terminations in the Telecommunications Closets.
3. A complete diagram of all copper and fiber, interior and inter-building cables.
4. A complete diagram of all cable tray, conduits and conduit sleeves.

5. A complete diagram of all manholes including section views detailing which cable is in which manhole duct

F. In addition to the AS-BUILT drawings, documentation of the cable plant shall be furnished as noted below:

1. All cable inventory data documentation will be submitted in designated Microsoft Excel 2007 format or later.
2. Documentation on horizontal cable will include cable number and length of cable.
3. Documentation on riser cable and interbuilding cable will include cable number, source and destination, type of cable, length of cable and number of pairs or fibers.
4. Complete cross connect documentation is required. This information will include detailed documentation of all four pairs of each horizontal cable and every pair of all copper riser and inter-building cable and every fiber of fiber optic cable.
5. Submit cable test results following this Section.
6. Submit warranty information following this Section.

1.21 FINAL REVIEW

A. Comply with Section 017700 – Closeout Procedures and the following.

B. Prior to requesting final payment, submit final approved operation and maintenance manuals including approved submittals, test reports and "AS-BUILT" drawings. Delivery of operation and maintenance manuals is a condition of final acceptance.

1.22 SUBMITTALS

A. All submittals for installation, substitutions, or modifications shall be made to the Owner for approval prior to start of work.

B. The Design Consultant and Owner must both approve all product data prior to procurement for all Telecommunications and Security equipment referenced in Division 26, 27, and 28.

C. Other City Departments may have specific needs in addition to the specification listed within. It is the design consultant responsibility to ensure other City departments get a chance to review the Division 26, 27, and 28 specifications referenced in this specification.

D. Requirements: Provide Shop Drawings and Equipment Submittals for all equipment shown on drawing or as specified herein. In addition, provide the following information complete, and in the manner described herein:

E. Shop Drawings: Indicate dimensions, reinforcement, size and locations of openings, and accessory locations for precast manholes.

F. Product Data: Submit for all products.

G. Manufacturer's Installation Instructions: Submit application conditions and limitations of use stipulated by Product testing agency specified under Regulatory Requirements. Include instructions for storage, handling, protection, examination, preparation, and installation of Product.

H. The Contractor shall submit a cable pulling plan for all fiber optic and multipair copper cables with a pair count of 25 pairs or greater, that includes, but is not limited to, the following:

1. Each cable run and route.
2. Date and duration of the pull.
3. Pulling methodology and equipment setups.
4. Pulling tension calculations for each pull in the run.
5. Safety issues and precautions to be taken.

I. Qualifications: Demonstrate compliance with requirements of above Paragraph 1.13.B, Contractor Qualifications.

J. Submit Technical Implementation Plans in accordance with all pertinent specifications.

K. Submit manufacturer’s technical data for each product provided.

L. Submit technical and operations manuals.

M. Manuals shall describe function, operation, and programmable parameters for each card and port for each device to be installed. Manuals shall include required maintenance to be performed.

N. Manuals shall be suitable for the training of future personnel by the Client, and for use as a reference by Operations personnel in performing work assignments.

O. As-built documentation. Notes shall be kept during initial installation and shall be made a permanent part of the installation manual pages as required.

P. For each active device installed, provide a printed configuration including a printout of the device as displayed on the network management system. Printed configuration parameters for each port on the device shall accompany the written report.

Q. Other information in support of the design, fabrication, and installation of the system.

R. An implementation schedule listing dates for required equipment installations for approval by the Design Consultant and Owner representative. The dates of equipment installation shall be in accordance with dates for installation of the various special systems and users. It is incumbent upon the implementers to include the dates for special system and user installations into the schedule.

S. Installation and Operations Manual (IOM) consisting of approved product data sheets, manufacture installation manuals, manufacturer operator manuals, start-up and shut-down procedures, troubleshooting guide, as-built drawings in AutoCAD format (printed 11x17, and electronic in native format), equipment schedules with part number, serial number, warranty expiration dates, certificates of warranty’s, contact information for installer and manufacturer. Neatly bind all information with index and tabs. The IOM shall be submitted and approved prior to final payment.

1.23 WARRANTY

A. A twenty-five (25) year Extended Product Warranty and System Assurance Warranty for this Structured Cabling system shall be provided.

1. Extended Product Warranty
   a) The Extended Product Warranty shall ensure against product defects, that all approved cabling components exceed the specifications of TIA 568, latest edition, and ISO/IEC IS 11801, exceed the attenuation and NEXT requirements of TIA TSB 67 and ISO/IEC IS 11801 for cabling links/channels, that the installation will exceed the loss and bandwidth requirements of TIA TSB 67 and ISO/IEC IS 11801 for fiber links/channels, for a twenty-five (25) year period. The warranty shall apply to all passive SCS components.
2. System Assurance
   a) The System Assurance shall cover the failure of the wiring system to support the application which it was designed to support, as well as additional application(s) introduced in the future by recognized standards or user forums that use the TIA 568, latest edition, or ISO/IEC IS 11801 component and link/channel specifications for cabling, for a twenty-five (25) year period.
3. Extended Product Warranty
   a) The Extended Product Warranty and the System Assurance shall cover the replacement or repair of defective product(s) and labor for the replacement or repair of such defective product(s).
4. Special Warranty
   a) The work of this section shall include a special warranty for a minimum of five (5) years signed by either the manufacturer of the materials herein and their authorized installer, or by the fabricator and their installer, without monetary limitation, agreeing to repair or replace components that fail in materials or workmanship within specified warranty period.
   b) System Certification
   c) Upon successful completion of the installation and subsequent inspection, the customer shall be provided with a numbered certificate, from the manufacturing company, registering the installation.

1.24 COMPLETENESS OF WORK

A. Complete and usable work: The contractor is responsible for providing complete and usable work according to contract documents. All materials and equipment shall be provided with all accessories and additional work required for field conditions, as well as additional work and accessories required for complete, usable, and fully functional construction and systems, even if not explicitly specified or indicated. Telecommunications system in this Contract shall be provided as complete and operable systems in full compliance with requirements on drawings and specification requirements. Drawings are diagrammatic and specifications are performance-based, and Contractor shall provide all work required to comply with drawings and specifications, even if not explicitly indicated or specified. Contractor shall be responsible for coordinating installation of electrical systems with all field conditions and work of other trades. Minimum clearances and work required for compliance with NFPA 70, *National Electrical Code*® (*NEC*®), and manufacturer's instructions shall be provided. Comply with additional requirements indicated for access and clearances. Contractor shall verify all field conditions and dimensions that affect selection and provision of materials and equipment, and shall provide any disassembly, reassembly, relocation, demolition, cutting and patching required to provide work specified or indicated, including relocation and reinstallation of existing wiring and equipment. Contractor shall protect from damage resulting from Contractor's operations existing facility, equipment, and wiring. Extra charges for completion and contract time extension will not be allowed because of field conditions or additional work required for complete and usable construction and systems. Comply with additional requirements indicated for access and clearances.

1. Drawings and specifications form complementary requirements; provide work specified and not shown, and work shown and not specified as though explicitly required by both. Except where explicitly modified by a specific notation to contrary, it shall be understood that indication or description of any item, in drawings or specifications or both, carries with it instruction to furnish and install item, provided complete.
2. Terms: As used in this specification, provide means furnish and install. Furnish means "to purchase and deliver to project site complete with every necessary appurtenance and support," and install means "to unload at delivery point at site and perform every operation necessary to establish secure mounting and correct operation at proper location in project."
3. Authority approvals: Give notices, file plans, obtain permits and licenses, pay fees, and obtain necessary approvals from authorities that have jurisdiction as required to perform work according to all legal requirements and with Specifications, Drawings, Addenda and Change Orders, all of which are part of Contract Documents.
4. Supplementary items: Provide supplementary or miscellaneous items, appurtenances, devices and materials necessary for a sound, secure and complete installation. Examine project drawings and other Sections of specifications for requirements that affect work of this section. Completely coordinate work of this section with work of other Sections and provide a complete and fully functional installation. Refer to all other drawings and other specifications sections that indicate types of construction in which work shall be installed and work of other sections with which work of this section must be coordinated
5. Quantities: Items referred to in singular number in Contract Documents shall be provided in quantities necessary to complete work.

1.25 SAFETY

A. The contractor shall follow the safety procedures.

1. The contractors shall be responsible for training all personnel under their employ in areas concerning safe work habits and construction safety. The contractor shall continually inform personnel on hazards particular to this project and update the information as the project progresses.

1.26 PROJECT / SITE CONDITIONS

A. Site Visitation: Visit the site of the proposed construction to thoroughly become familiar with all details of the work and working conditions, verify all dimensions in the field, and advise A/E of any discrepancy before performing any work.

B. Space Requirements:

1. Consider space limitations imposed by contiguous work in selection and location of equipment and material. Do not provide equipment or material that is not suitable in this respect.
2. Make changes in equipment location of up to 5 feet, to allow for field conditions prior to actual installation, at no additional compensation, as directed by A/E.
3. Install all equipment requiring service so that it is easily accessible.
4. Compare the equipment sizes with the space allotted for installation before installation and make written notice of possible conflict. Disassemble large equipment to permit installation through normal room openings when required. Should written notice not be made in a timely manner, make adjustments and modifications necessary without additional compensation.
5. Timely place all equipment too large to fit through finished openings, stairways, etc.

C. Cutting and Patching

1. Comply with Division 01 – Cutting and Patching.
2. Submit a written request to A/E in advance of cutting or alterations.
3. Execute cutting and demolition by methods, which will prevent damages to other work and will provide proper surfaces to receive installation of repairs.
4. Restore work which has been cut or removed; install new products complying with specified products, functions, tolerances and finishes as stated in the contract documents. Provide heavy chrome-plated or nickel-plated escutcheon plates of approved pattern for penetrations of finished surface. Approved escutcheon plates are B&C No. 10 with concealed hinges.
5. Fit work airtight to conduit, sleeves and other penetrations through surfaces. For fire-rated penetrations, provide in accordance with UL 1479 and ASTM E-814 assemblies utilizing products and materials equal to the rating of all surfaces penetrated.

D. Outages: All outages to existing on-line systems shall be coordinated and approved in writing by the owner prior to outage.

E. The contractor may have to perform some work after hours such as new cable pulls through active manhole systems, outage of existing services and such.

F. The contractor shall provide and install all cross-connect cabling, connectors, coupling panels. Couplers and any other materials necessary for a complete system installation when working in existing areas to extend active circuits.

G. Field verification: Carefully verify location, use and status of all material, equipment, and utilities that are specified, indicated, or deemed necessary for removal. Verify that all materials, equipment, and utilities to be removed are completely inactive and will not be required or in use after completion of project. Replace with equivalent any material, equipment and utilities that were removed by Contractor that are required to be left in place.

H. Existing utilities: As applicable, do not interrupt utilities serving facilities occupied by Owner or others unless permitted under following conditions and then only after arranging to provide temporary utility services according to requirements indicated:

1. Notify owner in writing at least 14 days in advance of proposed utility interruptions. Do not proceed with utility interruptions without Owner's written permission.
2. Equipment installation:
   a) Determine suitable path for moving unit substation into place; consider Project conditions.
   b) Verify clearance requirements and locate equipment to meet installation tolerances.

1.1 REVISE LOCATIONS AND ELEVATIONS FROM THOSE INDICATED TO THOSE REQUIRED TO SUIT PROJECT. IDENTIFICATION

A. Labeling

1. Label all backbone, horizontal and ground cables, innerducts, fiber strands, patch panels, patch panel termination positions, distribution frames, jacks, and cover plates.
2. Wire and fiber labels shall be white vinyl adhesive tape with black lettering. Text shall be typed with minimum 12 point font.
3. All wire labels should fully wrap the cable jacket and have repetitive lettering.
4. Label shall be attached to each copper cable at each end and in all boxes.
5. Provide front adhesive label for individual patch panel positions. Label patch panels consecutively from bottom to top. Label shall be typed with minimum font size of 12 point.
6. Label shall be attached to fiber cable at each end and to each individual fiber at each end prior to termination.
7. Cable labels shall be placed in the following locations: on jack face plates, on cable inside back boxes, junction boxes, access points, and manholes/handholds, on cable above the terminations in the IDF and MDF, on patch panels, and every 50 feet when not in conduit.
8. Provide conduit labels. Locate conduit labels at each end of conduit. The label shall be permanently affixed to the conduit at the conduit bushing and/or terminator and shall include the conduit destination.

B. Nameplates

1. Nameplates: Provide engraved three-layer laminated plastic nameplates with white letters on a black background.
2. Provide nameplates for the following:
   a. Equipment Racks and cabinets.
   b. Telecommunication Grounding Busbars.
   c. Equipment enclosures.
3. Nameplate font shall be minimum 24 point, bold, all caps.

C. Telecommunications Administration

1. Coverplate labels shall be typed with minimum font size of 12 point.
2. Labeling and color coding shall follow the following standards:

a. Label Codes

1) MDF SCS Labeling

IDF13–R2–F5-XX Y

(a) Letter if using same outlet box (A, B, C, D)
(b) Pull No. to Outlet Box
(c) Rack Termination Shelf Position ID
(d) Rack ID
(e) IDF Room Name

D. Color Codes

1. Voice Outlets: Color shall match coverplate color (White).
2. Data Outlets: Provide blue jack.
3. Security Outlet: Provide red jack.
4. Blanks: Color shall match coverplate color.

E. Cable Jacket Colors

1. Voice cables: Provide yellow jacket.
2. Data cables: Provide blue jacket.
3. Singlemode fiber optic cable and associated patch cord: Provide yellow jacket.
4. Multimode fiber optic cable and associated patch cord: Provide orange jacket.
5. Laser Optimized 50 micron multimode fiber optic cable and patch cords: Provide aqua jacket.
6. Security Cables: Provide red jacket.
7. Surveillance Cables: Provide green jacket
8. Audio/Visual Cables: Refer to Audio Visual Specifications.

F. Copper Cable 110 Wiring Blocks: Floor-standing frames and wall or cabinet-mounted 110 wiring blocks, 100- or 300- pair.

1. Wire punched down on 110 wiring block shall be labeled on 110 wiring blocks as individual pairs.
2. Label 110 wiring block pair count using Excel spreadsheet template, along with color transparent plastic strip (EFM) for color-coding.
3. Voice and data 110 wiring block labels will be distinguished by the following acronyms: Data Frame Example: Voice Frame Example:

   DT = Data Campus Cable VT = Voice Campus
   Cable DM = Data Backbone Cable VM = Voice Backbone
   Cable DL= Data Network Cable VP = Voice ISDN
   Power Cable DU = Data Horizontal Cable VU = Voice
   Horizontal Cable
4. Skip 25th position on each strip of 110 wiring block when wiring 4-pair cable.

5. Provide floor-standing frame labels assuming twelve 300-pair 110 wiring blocks. Group of blocks are to be designated as backbone cables, power cables, network cables, and horizontal voice or data cables.
6. Install nameplate on each floor-standing frame.
7.
8. Label network equipment 110 wiring blocks with equipment number, slot, and port number.
9. Insert EFM color-coded plastic slides over 110 block labels.

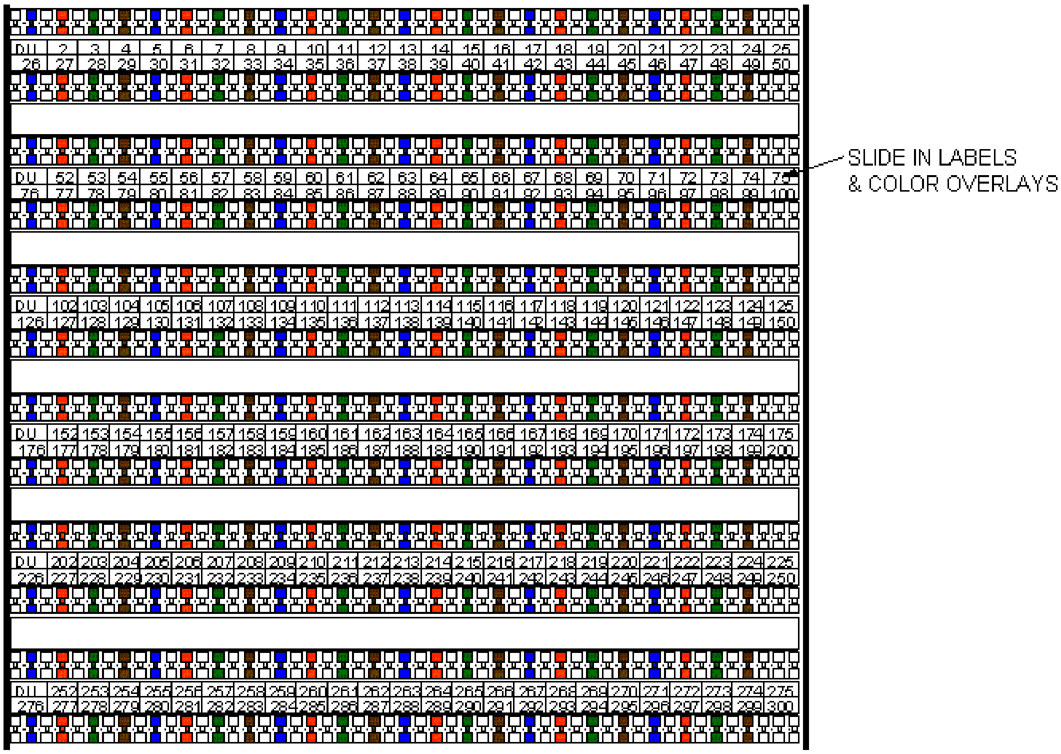

G. Lightguide Interconnection Unit (LIU)

1. Attach nameplate to door of LIU. LIU label shall have building number, IDF number, and numeric sequence.
2. List cable(s) and room number on LIU along with LIU name.
3. Provide continuous numbering sequence for individual fibers. Number individual fiber strands in LIU from 1 through 24, for cables with 24 fiber strands or less.
4. Use multiple LIUs for cables with greater than 24 fiber strands, and label sequentially according to number of fiber strands.

H. Telecommunication Cabinet: Floor-standing cabinet and wall-mounted cabinet.

1. Floor-standing cabinet nameplate shall have building number, color designation for classification of network, IDF number, and sequential character.
2. Center label at top of front door of cabinet.

I. Lightguide Termination Shelf

1. Label cable designation(s) on outside door of termination shelf.
2. Single shelf may hold more than one campus, backbone or horizontal cable. Do not split a single cable between shelves. Start numbering sequence from 1 within the shelf, and continue to last fiber strand within that cable, for cable larger than 4 fibers.
3. Label each individual coupler on coupler plate with appropriate sequential number for terminating shelves.
4. Each shelf shall contain either single-mode or multi-mode, not both.
5. Install multiple shelves for cables greater than 72 optical fibers. Label sequentially according to number of optical fibers.
6. Label 4-fiber user cables according to number of couplers in the shelf.

J. Optical Data Telecommunication Outlet:

1. Follow Section 1.16C for labeling scheme.
2. Attach label to outlet cover for appropriate outlet.

K. Telecommunication Outlet: Voice/Data

1. Follow Section 1.14C for labeling scheme.
2. Attach label with preassigned numeric value to outlet cover for appropriate outlet.

L. Backbone Conduit Pullbox: Install nameplate to cover of pullbox

M. Conduit: Label conduits with appropriate color-coded tape.

1. Install tie wrap label tag on each conduit end point that terminates in IDF, MDF, or stubbed through floor, ceiling or wall without pullbox.
2. Use only typed permanent black smear-proof lettering, in block type letters with clear, legible letters.
3. Match label information to information in nearest J-Box label that conduit leads to.
4. Provide all conduits greater than 1” with a label which includes the TO/FROM destination. Label to be located on each end of conduit and at 100’ intervals. Label shall be white with black letters. Face label downward where visible and clear from below. Label to consists of the following font sizes:
5. 1.25” – 2”conduit: ¼” Block letters with max 2 rows of text
6. 2.25’ – 3” conduit: ½” Block letters with max 2 rows of text
7. Over 3” conduit: ¾” Block letters with max 2 rows of text

N. Flexible Innerduct:

1. Every fabric multi-celled innerduct shall have a brass or plastic tag that contains the origin and destination of each end. Locate tags at each end and in every pullbox, handhole or manhole along pathway. The tags must be securely fastened. Label example: 1. RR21 to Server RM. 2. SR01W to RR03W

1.2 TESTING COPPER AND FIBER OPTICS

A. Copper Cable Testing:

1. General Requirements
   b. Every cabling link in the installation shall be tested for:
      1) Wire Map
      2) Length
      3)
      4) Insertion Loss
      5) NEXT Loss
      6) PS NEXT Loss
      7) ACR-F Loss
      8) PS ACR-F Loss
      9) Return Loss
      10) Propagation Delay
      11) Delay Skew
      12) in accordance with the field test specifications defined in ANSI/TIA-568, latest edition, “Commercial Balanced Twisted-Pair Telecommunications Cabling and Components Standard”, latest edition. This document will be referred to as the “Category 6 Standard.”
   b. In addition to testing the “In-link” performance parameters detailed in A.1 above, Alien Crosstalk testing or “Between-link’ testing shall be carried out in accordance with Annex A of the TIA TSB-155-A Document. Alien crosstalk testing includes the PS ANEXT and PS AACR-F (Power sum alien attenuation-to-crosstalk ratio from the far end) performance parameters as well as Alien Crosstalk Margin Computation (ACMC). The TIA TSB-155-A Document refers to the link-under-test for Alien Crosstalk as the disturbed link.
   c. ACMC shall meet or exceed the limits defined in Annex D of the TIA TSB-155-A Document.
      1) Selection of disturbed links: 1% of the links in the cabling installation or 5 links, whichever is more, with the highest insertion loss in the installation shall be selected as disturbed links.
      2) Selection of disturber links. Select all of the links that are in the same cable bundle or the most consistently positioned relative to the disturbed link as disturbing links.
   d. When the ACMC has reached 5 dB for the longest length links, further alien crosstalk testing can be discontinued when the number of measured disturbed links is at least 3.
   e. The installed twisted-pair horizontal links shall be tested from the IDF in the telecommunications room to the telecommunication wall outlet in the work area for compliance with the “Permanent Link” performance specification as defined in the Category 6 Standard.
   f. One hundred percent of the installed cabling links must pass the requirements of the Category 6 Standard mentioned in A.1 above and as further detailed in Section B. Any failing link must be diagnosed and corrected. The corrective action shall be followed with a new test to prove that the corrected link meets the performance

requirements. The final and passing result of the tests for all links shall be provided in the test results documentation in accordance with Section C below.

g. Trained technicians who have successfully attended an appropriate training program and have obtained a certificate as proof thereof shall execute the tests. Appropriate training programs include but are not limited to installation certification programs provided by BICSI or the ACP (Association of Cabling Professionals).

h. The test equipment (tester) shall comply with the accuracy requirements for level III field testers as defined in ANSI/TIA-1152. The tester including the appropriate interface adapter must meet the specified accuracy requirements. The accuracy requirements for the permanent link test configuration (baseline accuracy plus adapter contribution) are specified in Table 3 of ANSI/TIA-1152 (Table 3 in this

i.

j. TIA document also specifies the accuracy requirements for the Channel configuration).

k. The RJ45 test plug shall fall within the values specified in ANSI/TIA-568, latest edition, Annex C for NEXT, FEXT and Return Loss.

l. The tester shall be within the calibration period recommended by the vendor in order to achieve the vendor-specified measurement accuracy.

m. The tester interface adapters must be of high quality and the cable shall not show any twisting or kinking resulting from coiling and storing of the tester interface adapters. In order to deliver optimum accuracy, preference is given to a permanent link interface adapter for the tester that can be calibrated to extend the reference plane of the Return Loss measurement to the permanent link interface. The contractor shall provide proof that the interface has been calibrated within the period recommended by the vendor. To ensure that normal handling on the job does not cause measurable Return Loss change, the adapter cord cable shall not be of twisted-pair construction.

n. The Pass or Fail condition for the link-under-test is determined by the results of the required individual tests (detailed in Section 4.2.2 of ANSI/TIA-1152). Any Fail result yields a Fail for the link-under-test. In order to achieve an overall Pass condition, the results for each individual test parameter must Pass.

o. A Pass or Fail result for each parameter is determined by comparing the measured values with the specified test limits for that parameter. The test result of a parameter shall be marked with an asterisk (*) when the result is closer to the test limit than the accuracy of the field tester. The field tester manufacturer must provide documentation as an aid to interpret results marked with asterisks. To which extent '*' results shall determine approval or disapproval of the element under test shall be defined in the relevant detail specification, or agreed on as a part of a contractual specification.

p. A representative of the owner shall be invited to witness field testing. The representative shall be notified of the start date of the testing phase five business days before testing commences.

q. A representative of the owner will select a random sample of 5% of the installed links. The representative (or his authorized delegate) shall test these randomly selected links and the results are to be stored in accordance with the prescriptions in Section I.C. The results obtained shall be compared to the data provided by the installation contractor. If more than 2% of the sample results differ in terms of the pass/fail determination, the installation contractor under supervision of the end-user representative shall repeat 100% testing and the cost shall be borne by the installation contractor.

2. Performance Test Parameters
   a. The test parameters are defined in the Category 6 Standard. The test of each link shall contain all of the following parameters as detailed below. In order to pass the test, all measurements (at each frequency in the range from 1 MHz through 250 MHz) must meet or exceed the limit value determined in the above-mentioned standard. Additional tests shall be performed from 250 MHz to 500 MHz and must meet or exceed the limit valve determined by the cable or connector manufacturer.
      1) Wire Map
         a) Shall report Pass if the wiring of each wire-pair from end to end is determined to be correct.

      2) Length
         a) The field tester shall be capable of measuring length of all pairs of a basic link or channel based on the propagation delay measurement and the average value for NVP (1). The physical length of the link shall be calculated using the pair with the shortest electrical delay. This length figure shall be reported and shall be used for making the Pass/Fail decision. The Pass/Fail criteria are based on the maximum length allowed for the Permanent Link configuration (90 meters – 295 feet) plus 10% to allow for the variation and uncertainty of NVP.
      3) Insertion Loss (Attenuation)
         a) Insertion Loss is a measure of signal loss in the permanent link or channel. The term "Attenuation" has been used to designate "Insertion Loss." Insertion Loss shall be tested from 1 MHz through 250 MHz and 250 MHz to 500 MHz in maximum step size of 1 MHz. It is preferred to measure insertion loss at the same frequency intervals as NEXT Loss in order to provide a more accurate calculation of the Attenuation-to-Crosstalk ratio (ACR) parameter. Minimum test results documentation (summary results): Identify the worst wire pair (1 of 4 possible). The test results for the worst wire pair must show the highest attenuation value measured (worst case), the frequency at which this worst case value occurs, and the test limit value at this frequency.
      4) NEXT Loss
         a) Pair-to-pair near-end crosstalk loss (abbreviated as NEXT Loss) shall be tested for each wire pair combination from each end of the link (a total of 12 pair combinations). This parameter is to be measured from 1 through 250 MHz and 250 MHz to 500 MHz. NEXT Loss measures the crosstalk disturbance on a wire pair at the end from which the disturbance signal is transmitted (near-end) on the disturbing pair. The maximum step size for NEXT Loss measurements shall not exceed the maximum step size defined in the Category 6 Standard. Minimum test results documentation (summary results): Identify the wire pair combination that exhibits the worst case NEXT margin (2) and the wire pair combination that exhibits the worst value of NEXT (worst case). NEXT is to be measured from each end of the link-under-test. These wire pair combinations must be identified for the tests performed from

each end. Each reported case should include the frequency at which it occurs as well as the test limit value at this frequency.

Table 1 – Maximum frequency step size as define in ANSI/TIA-1152

Frequency Range (MHz)	Maximum Step size (MHz)
1 – 31.25	0.15
31.26 – 100	0.25
100 – 250	0.50
250 – 500	1.00
1 – 31.25	0.15

5) PS NEXT Loss

a) Power Sum NEXT Loss shall be evaluated and reported for each wire pair from both ends of the link under-test (a total of eight results). PS NEXT Loss captures the combined near-end crosstalk effect (statistical) on a wire pair when all other pairs actively transmit signals. Like NEXT this test parameter must be evaluated from 1 through 250 MHz and 250 MHz to 500 MHz and the step size may not exceed the maximum step size defined in the Category 6 Standard. Minimum test results documentation (summary results): Identify the wire pair that exhibits the worst-case margin and the wire pair that exhibits the worst value for PS NEXT. These wire pairs must be identified for the tests performed from each end. Each reported case should include the frequency at which it occurs as well as the test limit value at this frequency.

6) ACR-F Loss, pair-to-pair

a) Attenuation Crosstalk Ratio Far-end is calculated from the pair-to-pair FEXT Loss. It shall be measured for each wire-pair combination from both ends of the link under-test. FEXT Loss measures the crosstalk disturbance on a wire pair at the opposite end (far-end) from which the transmitter emits the disturbing signal on the disturbing pair. FEXT is measured to compute ACR-F Loss that must be evaluated and reported in the test results. ACR-F measures the relative strength of the far-end crosstalk disturbance relative to the attenuated signal that arrives at the end of the link. This test yields 24 wire pair combinations. ACR-F is to be measured from 1 through 250 MHz and 250 MHz to 500 MHz and the maximum step size for FEXT Loss measurements shall not exceed the maximum step size defined in the standard. Minimum test results documentation (summary results): Identify the wire pair combination that exhibits the worst-case margin and the wire pair combination that exhibits the worst value for ACR-F. These wire pairs must be identified for the tests performed from each end. Each reported case should include the frequency at which it occurs as well as the test limit value at this frequency.

7) PS ACR-F Loss
   a) Power Sum Attenuation Crosstalk Ratio Far-end is a calculated parameter that combines the effect of the FEXT disturbance from three wire pairs on the fourth one. This test yields eight wire-pair combinations. Each wire-pair is evaluated from 1 through 250 MHz and 250 MHz to 500 MHz in frequency increments that do not exceed the maximum step size defined in the standard. Minimum test results documentation (summary results): Identify the wire pair that exhibits the worst pair combinations must be identified for the tests performed from each end. Each reported case should include the frequency at which it occurs as well as the test limit value at this frequency.
8) Return Loss.

   a) Return Loss (RL) measures the total energy reflected on each wire pair. Return Loss is to be measured from both ends of the link-under-test for each wire pair. This parameter is also to be measured form 1 through 250 MHz in frequency increments that do not exceed the maximum step size defined in the Category 6,.Minimum test results documentation (summary results): Identify the wire pair that exhibits the worst-case margin and the wire pair that exhibits the worst value for Return Loss. These wire pairs must be identified for the tests performed from each end. Each reported case should include the frequency at which it occurs as well as the test limit value at this frequency.
9) Propagation Delay
   a) Propagation delay is the time required for the signal to travel fromone of the link to the other. This measurement is to be performed for each of the four wire pairs. Minimum test results documentation (summary results): Identify the wire pair with the worst-case propagation delay. The report shall include the propagation delay value measured as well as the test limit value.
10) Delay Skew [as defined in the Category 6 Standard; Section 6.2.19].
   a) This parameter shows the difference in propagation delay between the four wire pairs. The pair with the shortest propagation delay is the reference pair with a delay skew value of zero. Minimum test results documentation (summary results): Identify the wire pair with the worst-case propagation delay (the longest propagation delay). The report shall include the delay skew value measured as well as the test limit value.
11) PS ANEXT
   a) Pair-to-pair Alien NEXT (ANEXT) contributions is measured by applying the stimulus signal at the near end to one wire pair of a disturbing link and measuring the coupled signal at the near end of a wire pair in a disturbed link. This process is repeated for every wire pair in a disturbing link. The PS ANEXT for each wire pair in a disturbed link is obtained by the power sum addition of all the pair-to-pair ANEXT results to that wire pair from all wire pairs in disturbing links. All the links that are bundles with the disturbed link need to be

included as disturbing links. In addition, links that are terminated in adjacent positions in a patch panel or interconnect panel may also need to be included as disturbing links in this test.

b) Minimum test results documentation (summary results): Identify the wire pair that exhibits the worst-case margin and the wire pair that exhibits the worst value for PS ANEXT. These wire pairs must be identified for the tests performed from each end. Each reported case should include the frequency at which it occurs as well as the test limit value at this frequency.

12) PS AACR-F

a) The pair-to-pair Alien Far End crosstalk (AFEXT) contributions is measured by applying the signal at the near end to one wire pair of a disturbing channel or permanent link and measuring the coupled signal at the far end of a wire pair in a disturbed channel or permanent link.

This process is repeated for every wire pair in a disturbing link and for all links in close proximity. A normalization, which is dependent on the relative length of disturbing and disturbed link, is applied to each pair-to-pair alien FEXT measurement. Then the PS Alien Attenuation- to-Crosstalk Ratio from the Far end (PS AACR-F) for each wire pair in a disturbed channel or permanent link is obtained by the power sum addition of all the normalized pair-to-pair far end alien crosstalk results to that wire pair from all wire pairs in disturbing links in close proximity.

b) Minimum test results documentation (summary results): Identify the wire pair that exhibits the worst-case margin and the wire pair that exhibits the worst value for PS AACR-F. if the link or channel connects two patch panels (data center), these wire pairs must be identified for the tests performed from both ends. Each reported case should include the frequency at which it occurs as well as the test limit value at this frequency.

3. Test Result Documentation

a. The test results/measurements shall be transferred into a Windows™-based database utility that allows for the maintenance, inspection and archiving of these test records. A guarantee must be made that the measurement results are transferred to the PC unaltered, i.e., “as saved in the tester” at the end of each test and that these results cannot be modified at a later time.

b. The database for the completed job shall be stored and delivered on CD- ROM or DVD including the software tools required to view, inspect, and print any selection of test reports.

c. A paper copy of the test results shall be provided that lists all the links that have been tested with the following summary information

1) The identification of the link in accordance with the naming convention defined in the overall system documentation

2) The overall Pass/Fail evaluation of the link-under-test including the NEXT Headroom (overall worst case) number

3) The date and time the test results were saved in the memory of the tester.
4) General Information to be provided in the electronic data base with the test results information for each link:
   a) The identification of the customer site as specified by the end-user
   b) The identification of the link in accordance with the naming convention defined in the overall system documentation
   c) The overall Pass/Fail evaluation of the link-under-test
   d) The name of the test limit selected to execute the stored test results
   e) The cable type and the value of NVP used for length calculations
   f) The date and time the test results were saved in the memory of the tester
   g) The brand name, model and serial number of the tester
   h) The identification of the tester interface
   i) The revision of the tester software and the revision of the test limits database in the tester

d. The test results information must contain information on each of the required test parameters that are listed in Section B and as further detailed below under paragraph C5.

e. In-link (In-Channel) detailed test results. The detailed test results data to be provided in the electronic database for must contain the following information:
1) For each of the frequency-dependent test parameters, the value measured at every frequency during the test is stored. The PC-resident database program must be able to process the stored results to display and print a color graph of the measured parameters. The PC-resident software must also provide a summary numeric format in which some critical information is provided numerically as defined by the summary results (minimum numeric test results documentation) as outlined above for each of the test parameters.
   a) Length: Identify the wire-pair with the shortest electrical length, the value of the length rounded to the nearest 0.1 m (1) and the test limit value
   b) Propagation delay: Identify the pair with the shortest propagation delay, the value measured in nanoseconds (ns) and the test limit value
   c) Delay Skew: Identify the pair with the largest value for delay skew, the value calculated in nanoseconds (ns) and the test limit value
   d) Insertion Loss (Attenuation): Minimum test results documentation as explained in Section B for the worst pair
   e) Return Loss: Minimum test results documentation as explained in Section B for the worst pair as measured from each end of the link
   f) NEXT, ACR-F: Minimum test results documentation as explained in Section B for the worst pair combination as measured from each end of the link
   g) PS NEXT and PS ACR-F: Minimum test results documentation as explained in Section B for the worst pair as measured from each end of the link.
2) Between-Link (Between-Channel) Test Results Data. A test report shall be provided for each disturbed link included in the Alien Crosstalk sample test. This test report must contain:

a) PS ANEXT results at each frequency (See Table 1) for each wire pair in a victim link as well as the PS ANEXT results for the average of these four wire pairs. The worst case margin and the worst values shall be provided for each wire pair and the average of the four wire pairs. PS ANEXT shall be measured and tested from the end of the link or channel where all cables are terminated at a distribution panel. In case the cabling runs from panel to panel (data center) where the worst case PS ANEXT margin is less than 2 dB, the PS ANEXT test results for each disturbed link shall be collected and saved from both ends (both panels) of the disturbed link.

b) PS AACR-F results at each frequency tested (See Table 1) for each wire pair in a disturbed link as well as the PS AACR-F results for the average of the four wire pairs. The worst case margin and the worst values shall be provided for each wire pair and the average of the four wire pairs. PS AACRF only needs to be measured and tested from one end of the link or channel. Connect the main DTX-1800 unit (measurement of PS AACR-F disturbance) to the disturbed link or

c)

d) channel at the end where all cabling links are terminated at a distribution panel. Select End 1 in the AxTalk Analyzer Software.

e) ACMC or alien crosstalk margin computation is used to further characterize the alien crosstalk coupling between channels. The alien crosstalk margin computation is used in the event that the PS ANEXT/PS AACR-F limits are not met. If the ACMC passes, then the user shall ignore any PS ANEXT/PS AACR-F failures. The alien crosstalk margin computation ensures the total combined PS AFEXT and PS ANEXT coupled into a channel is limited in order to maintain the 10GBASE-T minimum signal to noise ratio. The alien crosstalk margin is specified for each of the individual 4-pairs as well as the average "across the 4-pairs". It is unique to the TSB-155-A Document and does NOT apply to Category 6A links.

B. Fiber Testing

1. Optical Fiber Cable Testing w/ OTDR
   a. The Contractor shall test all fiber optic cable prior to the installation of the cable. The Contractor shall assume all liability for the replacement of the cable should it be found defective at a later date.
   b. All fiber testing shall be performed on all fibers in the completed end to end system. Testing shall consist of a bidirectional end to end OTDR trace performed per TIA 455-61. The system loss measurements shall be provided at 850 and 1300 nanometers for multimode fibers and 1310 and 1550 nano-meters for single mode fibers.
   c. Fiber links shall have a maximum loss of:
   d. (allowable cable loss per km)(km of fiber in link) + (.4dB)(number of mated connectors) + (.2db)(number of splices) = maximum allowable loss
   e. Loss numbers for the installed link shall be calculated by taking the sum of the bidirectional measurements and dividing that sum by two.

f. Any link not meeting the requirements of the standard shall be brought into compliance by the contractor, at no charge to the Owner.

g. Documentation shall be provided in both hard copy and 3 1/2 inch diskette to the point of contact.

2. Optical Fiber Cable Testing w/ Power Meter
   a. Multimode Horizontal Link Segments should be tested in one direction at the 850-nm or 1300-nm wavelength.
   b. Multimode Backbone and Composite Link Segments should be tested in one direction at both 850-nm and 1300-nm wavelengths.
   c. Singlemode Horizontal Link Segments should be tested in one direction at the 1310-nm or 1550-nm wavelength.
   d. Singlemode Backbone and Composite Link Segments should be tested in one direction at both 1310-nm and 1550-nm wavelengths.
   e. Note: The minor attenuation differences due to test direction are on par with the accuracy and repeatability of the test method. Therefore, testing in only one direction is warranted. Horizontal Link Segments are limited to 90 meters. Therefore, attenuation differences caused by wavelength are insignificant, and as a result, single wavelength testing is sufficient.
3. In compliance with TIA-526-14A “Optical Power Loss Measurements of Installed Multimode Fiber Cable Plant” and TIA-526-7 “Measurement of Optical Power
4. Loss of Installed Single-Mode Fiber Cable Plant”, the following information should be recorded during the test procedure:
   a. Names of personnel conducting the test.
   b. Type of test equipment used (manufacturer, model, serial number).
   c. Date test is being performed.
   d. Optical source wavelength, spectral width, and for multimode, the coupled power ratio (CPR).
   e. Fiber identification.
   f. End point locations.
   g. Test direction.
   h. Reference power measurement (when not using a power meter with a Relative Power Measurement Mode).
   i. Measured attenuation of the link segment.
   j. Acceptable link attenuation.

      Note: Horizontal Link Segments are limited to 90 meters, therefore, the acceptable link attenuation can be based on the longest installed link without introducing a significant error.
5. Acceptable Attenuation Values
   a. The general attenuation equation for any link segment is as follows: Acceptable Link Attn. = Cable Attn. + Connection Attn. + Splice Attn. + CPR Adj.

      Note: A connection is defined as the joint made by mating two fibers terminated with remateable connectors (e.g. LC).
   b. Multimode Attenuation Coefficients
      1) Cable Attn. = Cable Length (km) □ (3.40 dB/km@850nm or 1.3 dB/km@1300nm)
      2) Connection Attn. (Fiber ST or SC connectors) = (Mated Connections □ 0.4 dB)
      3) Connection Attn. (LC connectors) = (Mated Connections □ 0.2 dB)

4) Splice Attn. (CSL or Fusion) = Splices □ 0.30 dB
5) CPR Adj. = See table below

Multimode Light Source CPR Adjustment					
	Cat-1	Cat-2	Cat-3	Cat-4	Cat-5
Links with ST or SC Connections	+ 0.50	0.00	□ 0.25	□ 0.50	□ 0.75
Links with LC Connections	+ 0.25	0.00	□ 0.10	□ 0.20	□ 0.30

c. Coupled Power Ratio Measurement

1) Note: The Coupled Power Ratio of a light source is a measure of the modal power distribution launched into a multimode fiber. A light source that launches a higher percentage of its power into the higher order modes of a multimode fiber produces a more over-filled condition and is classified as a lower category than a light source that launches more of its power into just the lower order modes producing an under-filled condition. Under- filled conditions result in lower link attenuation, while over-filled conditions produce higher attenuation. Therefore, adjusting the acceptable

link attenuation equation to compensate for a light source's launch characteristics increases the accuracy of the test procedure.

d. Procedure:

1) CPR Test Jumper-1 shall be multimode, 1 - 5 meters long with connectors compatible with the light source and power meter and have the same fiber construction as the link segment being tested.
2) CPR Test Jumper-2 shall be singlemode, 1 - 5 meters long with connectors compatible with the light source and power meter.
3) Clean the test jumper connectors and the test coupling per manufacturer's instructions.
4) Follow the test equipment manufacturer's initial adjustment instructions.
5) Connect multimode test jumper-1 between the light source and the power meter. Avoid placing bends in the jumper that are less than 100 mm (4 inches) in diameter. See Figure 1.

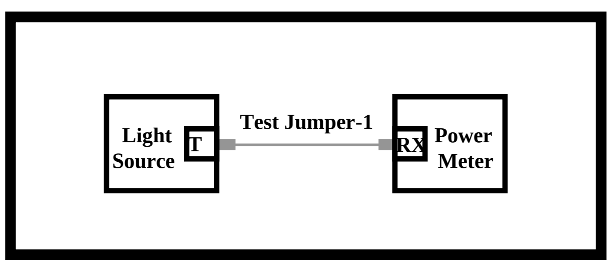

Figure 1

6) If the power meter has a Relative Power Measurement Mode, select it. If it does not, record the Reference Power Measurement (Pref). Note: If the meter can display power levels in dBm, select this unit of measurement to simplify subsequent calculations.

7) Disconnect test jumper-1 from the power meter. Do NOT disconnect the test jumper from the light source.

8) Connect jumper-2 between the power meter and test jumper-1 using the test coupling. The singlemode jumper should include a high order mode filter. This can be accomplished by wrapping the jumper three times around a 30 mm (1.2 inches) diameter mandrel. See Figure 2.

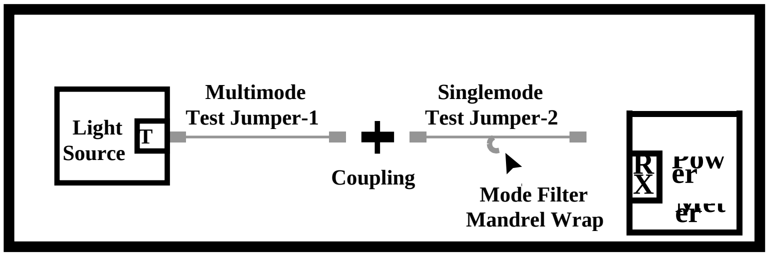

Figure 2

a) Record the Power Measurement (P_{sum}). If the power meter is in Relative Power Measurement Mode, the meter reading represents the CPR value. If the meter does not have a Relative Power Measurement Mode, perform the following calculation:

If P_{sum} and P_{ref} are in the same logarithmic units (dBm, dBu, etc): CPR (dB) = | P_{sum} □ P_{ref} |

If P_{sum} and P_{ref} are in watts:

CPR (dB) = | 10 □ $\log_{10}$ [P_{sum}/P_{ref}] |

1.27 DELIVERY STORAGE AND HANDLING

A. General: Contractor shall be responsible for the deliveries, storing and handling of all materials relative to the SCS systems, including materials supplied by others that are part of the SCS installation contract. Material shall be stored and protected according to manufacturer's instructions. Contractor shall be responsible for the security of all material during installation. For all material provided by contractor, or delivered to contractor on site, contractor assumes full responsibility and liability for any material shortages, damage or loss due to storage and handling methods.

1.28 PERMITS AND INSPECTIONS

A. General: All telecommunications systems shall meet or exceed the latest requirements of all national, state, county, municipal, and other authorities exercising jurisdiction over the telecommunications systems and the Project.

B. Contractor shall obtain and pay for all licenses, permits, and inspection fees required by local agencies and/or other agencies having jurisdiction.

C. Contractor agrees to furnish any additional labor or material required to comply with all local and other agencies having jurisdiction at no additional cost.

D. Contractor shall obtain certificates of inspection and approval from all authorities having jurisdiction, and forward copies of same to Owner's Representative prior to request for Project acceptance inspections, final completion inspections, substantial completion inspections, and acceptance testing/demonstrations.

E. All required permits and inspection certificates shall be made available at the completion of the telecommunications system installation and commissioning.

F. Any portion of the telecommunications work which is not subject to the requirements of an electric code published by a specific AHJ shall be governed by the National Electrical Code and other applicable sections of the National Fire Code, as published by the National Fire Protection Association (NFPA).

G. Installation procedures, methods and conditions shall comply with the latest requirements of the Federal Occupational Safety and Health Administration (OSHA).

1.29 - EXAMINATION

A. General: Prior to submitting a proposal, Contractor shall examine site, review Project drawings and specifications, and determine exact extent of work required. Contractor shall include in their proposals all materials, labor, and equipment required to complete required work indicated. Work that is necessary to obtain complete and usable Project as specified herein shall be included in Contractor's proposal, even if not indicated or specified.

B. Bidders' questions: Should bidders have questions as to intent of drawings and specifications, quality of materials to be used, and work to be performed, questions shall be submitted in writing to Owner's Representative in manner dictated by Owner's Representative. All answers and clarifications to drawings and specifications will be issued in writing.

C. Extra payment will not be allowed for claims for due to unfamiliarity with work to be performed by other trades, existing conditions at job site, local or state laws and codes, and alterations due to field conditions.

1.30 - ADDITIONAL COSTS

A. General: Project acceptance inspections, final completion inspections, substantial completion inspections, and acceptance testing/demonstrations shall be conducted after verification of system operation and completeness by Contractor.

B. Inspections and testing: For Project acceptance inspections, final completion inspections, substantial completion inspections, and/or testing/demonstrations that require more than one site visit by Owner's Representative or Architect/Engineer to verify Project compliance for same material or equipment, Owner reserves right to obtain compensation from Contractor to defray cost of additional site visits that result from Project construction or testing deficiencies/incompleteness, incorrect information, or non-compliance with Project provisions. Owner's Representative will notify Contractor of hourly rates and travel expenses for additional site visits and will issue an invoice to Contractor for additional site visits. Payment of additional site visit costs by Contractor is required within 30 days of invoicing. Owner reserves right to deduct additional costs defined herein that are indicated on past due invoices from Project amount due Contractor.

C. Exclusions: Contractor shall not be eligible for extensions of Project schedule or additional charges resulting from additional site visits that result from Project construction or testing deficiencies/incompleteness, incorrect information, or non-compliance with Project provisions.

PART 2 – PRODUCTS

2.1 NOT USED

PART 3 - EXECUTION

3.1 GENERAL REQUIREMENTS

A. General: Sequence, coordinate, and integrate various elements of telecommunications system, materials, and equipment. Comply with following requirements as a minimum.

B. Coordinate systems, equipment, and materials installation with other building components.

C. Verify all dimensions by field measurements.

D. Arrange for chases, slots, and openings in other building components during progress of construction, to allow for wiring, cabling, and equipment installations.

E. Coordinate installation of required supporting devices and sleeves to be set in poured-in-place concrete and other structural components, as they are constructed.

F. Sequence, coordinate, and integrate installations of materials and equipment for efficient flow of Work. Give particular attention to large equipment requiring positioning prior to closing in building.

G. Where mounting heights are not detailed or dimensioned, install systems, materials, and equipment to provide maximum headroom and access for service and maintenance as possible.

H. Coordinate connection of materials, equipment, and systems with exterior underground and overhead utilities and services. Comply with requirements of governing regulations, franchised service companies, and controlling agencies. Provide required connection for each service.

I. Install systems, materials, and equipment to conform with approved submittal data, including coordination drawings, to greatest extent possible. Conform to arrangements indicated by Contract Documents, recognizing that portions of Work are shown only in diagrammatic form. In case of conflict among individual system requirements, request direction in writing from Owner's Representative.

J. Install systems, materials, and equipment level and plumb, parallel and perpendicular to other building systems and components, where installed in both exposed and un-exposed spaces.

K. Install cabling, wiring, and equipment to facilitate servicing, maintenance, and repair or replacement of equipment components. As much as practical, connect equipment for ease of disconnecting, with minimum of interference with other installations.

L. Provide access panel or doors where units are concealed behind finished surfaces.

M. Install systems, materials, and equipment giving right-of-way priority to systems required to be installed at a specified slope.

N. Comply with all requirements and work indicated on drawings.

O. Avoid interference with structure and with work or other trades, preserving adequate headroom and clearing doors and passageways to satisfaction of Owner and according to code requirements.

P. Install equipment and cabling/wiring so as to properly distribute equipment loads on building structural members provided for equipment support under other Sections. Roof-mounted equipment shall be installed and supported on structural steel or roof curbs as appropriate.

Q. Provide suspended platforms, strap hangers, brackets, shelves, stands or legs as necessary for floor, wall and ceiling mounting of equipment as required.

R. Provide steel supports and hardware for proper installation of hangers, anchors, guides, and other support hardware.

S. Obtain and analyze catalog data, weights, and other pertinent data required for proper coordination of equipment support provisions and installation.

T. Structural steel and hardware shall conform to ASTM standard specifications. Use of steel and hardware shall conform to requirements of AISC Code of Practice: Section Five.

U. Verify site conditions and dimensions of equipment to ensure access for proper installation of equipment without disassembly that would void warranty.

3.2 EQUIPMENT INSTALLATION

A. General: Install equipment according to manufacturer's written instructions. Install equipment level and plumb. Install wiring and cabling between equipment and all related devices.

B. Mounting: If neither the Owner's Instructions nor the individual section call out the required hardware mounting, use the following.

1. For equipment at walls, bolt units to wall or mount on structural steel channel strut bolted to wall.
2. For equipment not at walls, provide freestanding racks fabricated of structural steel members and slotted structural steel channel strut.
3. Use feet consisting of 0.25 inch thick steel plates, 6 square inches, bolted to floor.
4. Use feet for welded attachment of vertical posts not over 3 feet on center.
5. Connect posts with horizontal U channel steel strut and bolt control equipment to channels.

C. Cleaning: Remove paint splatters and other spots, dirt, and debris. Touch up scratches and mars of finish to match original finish. Clean devices internally using methods and materials as recommended by manufacturer.

D. Connections: Tighten wiring connectors, terminals, bus joints, and mountings, to include lugs, screws and bolts according to equipment manufacturer's published torque tightening values for equipment connectors. In absence of published connection or terminal torque values, comply with torque values specified in UL 486A and UL 486B.

3.3 CUTTING AND PATCHING ADDITIONAL REQUIREMENTS.

A. General: Perform cutting and patching according to contract general requirements above in section 18 C. In addition, following requirements apply:

1. Perform cutting, fitting, and patching of electrical equipment and materials required to uncover existing infrastructure in order to provide access for correction of improperly installed existing or new Work.
2. Remove and replace defective Work.
3. Remove and replace Work not conforming to requirements of Contract Documents.
4. Remove samples of installed Work as specified for testing.
5. Install equipment and materials in existing structures.

B. Demolition and removal: Cut, remove, and legally dispose of selected equipment, components, and materials as indicated, including but not limited to removal of material, equipment, devices, and other items indicated to be removed and items made obsolete by new Work. Provide and maintain temporary partitions or dust barriers adequate to prevent spread of dust and dirt to adjacent areas.

C. Protection of work: Protect structure, furnishings, finishes, and adjacent materials not indicated or scheduled to be removed. During cutting and patching operations, protect adjacent installations. Patch finished surfaces and building components using new materials specified for original installation and experienced Installers.

3.4 PENETRATIONS AND SLEEVES

A. General: Coordinate work with other sections. SCS Installation Contractor shall be responsible for the provision of cabling sleeves and conduits unless specifically provided by the Electrical Contractor. SCS Installation Contractor shall coordinate with Electrical Contractor to determine exact requirements.

B. When required, set sleeves in forms before concrete is poured. Provide core drilling as necessary if walls are poured or otherwise constructed without sleeves and wall penetration is required. Do not penetrate structural members. Provide sleeves and packing materials at all penetrations of foundations, walls, slabs (except on-grade), partitions, and floors. Sleeves shall meet requirements of pertinent specifications. Lay out penetration and sleeve openings in advance, to permit provision in work. Set sleeves and conduit in forms before concrete is poured. Provide remedial work where sleeves and conduits are omitted or improperly placed.

C. Sleeve fill: Sleeves that penetrate outside walls, basement slabs, footings, and beams shall be waterproof.

1. Fill slots, sleeves and other openings in floors or walls if not used.
2. Fill spaces in openings after installation of conduit or cable.
3. Fill for floor penetrations shall prevent passage of water, smoke, fire, and fumes.
4. Fill shall be fire resistant in fire floors and walls, and shall prevent passage of air, smoke and fumes. See section 27 05 32 - Firestopping for Telecommunications Systems.
5. Sleeves through floors shall be watertight and shall extend 2 inches above floor surface.
6. Where raceways passing through openings are exposed in finished rooms, finishes of filling materials shall match and be flush with adjoining floor, ceiling, and wall finishes.

D. Conduit sleeves:

1. Annular space between conduit and sleeve shall be at least 1/4 inch.
2. Sleeves shall not be provided for slabs-on-grade unless specified or indicated otherwise.
3. For sleeves through rated fire walls and smoke partitions, comply with requirements for firestopping. See section 27 05 32 - Firestopping for Telecommunications Systems.

E. Supports: Do not support piping risers or conduit on sleeves.

F. Future use: Identify unused sleeves and slots for future installation.

3.5 CORE DRILLING

A. General: Core drilling shall be avoided where possible. Where core drilling is unavoidable, locate all required openings prior to coring.

B. Coordinate openings with other trades and utilities and prevent damage to structural reinforcement.

C. Thoroughly investigate existing conditions in vicinity of required opening prior to coring.

D. Set sleeves prior to installation of structure for passage of pipes, conduit, ducts, etc. Protect all areas from damage.

3.6 CLEANING

A. Contractor is responsible for cleanup of debris on a daily basis. Cost of cleanup is the responsibility of the Contractor.

B. During progress of work, remove equipment and unused material. Put building and premises in neat and clean condition. Perform cleaning and washing required to provide acceptable appearance and operation of equipment to satisfaction of Owner's Representative.

C. After completion of Project, clean exterior surface of all equipment, including concrete residue, dirt, and paint residue. Final cleaning shall be performed prior to Project acceptance by Owner's Representative.

3.7 ACCESS AND ACCESS PANELS

A. General: Provide access to materials and equipment that require inspection, replacement, repair or service. Provide access panels and/or doors as required to allow service of all equipment components. Provide access panels where items installed require access and are concealed in floor, wall, furred space or above ceiling. Ceilings consisting of lay-in or removable splined tiles do not require access panels. Locations of equipment requiring access shall be noted on record drawings. Access panels shall have same fire rating classification as surface penetrated.

B. Coordination: Coordinate and prepare a location, size, and function schedule of access panels required to fully service equipment and deliver to Owner.

C. Construction: Panels shall be at least 12 inches by 12 inches and located to provide optimum access to equipment for maintenance and servicing. Verify access panel locations and construction with Owner's Representative.

3.8 STARTUP AND OPERATIONAL TESTING

A. General: Owner maintains right to have access to entire project site to prepare facility for occupancy and operation. Completion of startup and field testing shall be accomplished as a prerequisite for substantial completion. Operate and maintain systems and equipment until final acceptance by Owner. All guarantees and warranties shall not begin until final acceptance of systems and equipment by Owner. Acceptance requires, at a minimum, complete systems startup and testing.

3.9 SPECIAL RESPONSIBILITIES AND INFORMATION

A. Coordination of information: Cooperate and coordinate with work of other sections in executing work of this section. Perform work such that progress of entire project, including work of other sections, shall not be interfered with or delayed. Provide information as requested on items furnished under this section, which shall be installed under other sections. Obtain detailed installation information from manufacturers of equipment provided under this section.

B. Information gathering: Obtain final rough-in dimensions or other information as needed for complete installation of items furnished under other sections or by Owner. Keep fully informed as to shape, size and position of openings required for material or equipment to be provided under this and other sections. Give full information so that openings required by work of this section may be coordinated with other work and other openings and may be provided for in advance. In case of failure to provide sufficient information in proper time, provide cutting and patching or have same done, at no expense to Owner.

C. Housekeeping pads: Provide information as requested as to sizes, number and locations of concrete housekeeping pads necessary for floor mounted equipment

D. Maintenance of equipment and systems: Maintain equipment and systems until Final Acceptance. Ensure adequate protection of equipment and material during delivery, storage, installation and shutdown and during delays pending final test of systems and equipment because of seasonal conditions.

E. Use of premises: Use of premises shall be restricted as directed by Owner's Representative and as required below:

F. Cleaning and rubbish removal: Remove and dispose of dirt and debris and keep premises clean. During progress of work, remove equipment and unused material. Put building and premises in neat and clean condition and do cleaning and washing required to provide acceptable appearance and operation of equipment, to satisfaction of Owner's Representative.

G. Rubbish Removal: Provide for the removal from the site of all spoils, debris, boxes, packaging, crates, and trash generated from the work.

H. Storage: Store materials maintaining an orderly, clean appearance. If stored on site in open or unprotected areas, all equipment and material shall be kept off ground by means of pallets or racks and covered with tarpaulins.

I. Protection of fireproofing:

1. Clips, hangers, clamps, supports and other attachments to surfaces to be fireproofed shall be installed, if possible, prior to start of spray fire proofing work.
2. Conduits and other items that would interfere with proper application of fireproofing shall be installed after completion of spray fire proofing work.
3. Patching and repairing of fireproofing due to cutting or damaging to fireproofing during course of work specified under this section shall be performed by installer of fireproofing and paid for by section responsible for damage and shall not constitute grounds for an extra to Owner.

J. Temporary utilities: Refer to contract general requirements regarding requirements.

K. Movement of materials: Unload materials and equipment delivered to site. Pay costs for rigging, hoisting, lowering and moving equipment on and around site, in building or on roof.

3.10 DIVISION OF WORK

A. Contractor holding contract with Owner is responsible for coordinating work of all subcontractors to provide a complete and usable Project complying with contract provisions of Project documents.

B. Failure to coordinate work by subcontractors and suppliers will not be considered justification for additional compensation or extension of schedule.

END of SECTION 270000

SECTION 270526
TELECOMMUNICATION GROUNDING AND BONDING

PART 1 - GENERAL

1.1 PROJECT SCOPE SUMMARY

A. This Section specifies the requirements for the Communications Grounding and Bonding..

1.2 REFERENCES

A. Related Sections:

1. Section 01
2. Section 263353: Telecommunications Uninterruptible Power Supply (UPS)
3. Section 270000: Communications
4. Section 270526: Telecommunication Grounding and Bonding
5. Section 270528: Interior Communications Pathways
6. Section 270543: Exterior Communication Pathways
7. Section 270553: Identification and Labeling of Communication Infrastructure
8. Section 271100: Communication Room Fittings
9. Section 271300: Backbone and Riser Media Infrastructure
10. Section 271500: Horizontal Media Infrastructure
11. Section 272100: Data Communication Network Equipment
12. Section 280500: Electronic Safety and Security
13. Section 281300: Access Control System (ACS)
14. Section 282300: Digital Video Surveillance System (DVSS)

1.3 REFERENCES AND STANDARDS

Section 270000 in its entirety shall be included as part of this specification.

1.4 DEFINITIONS AND ABBREVIATIONS

A. Section 270000

B. TMGB - Telecommunications Main Grounding Busbar: The dedicated extension of the building grounding electrode system for the telecommunications infrastructure. The central attachment point for the TBB's and equipment typically located in the MDF, also known as the Main Cross-connect (MC).

C. TGB - Telecommunications Grounding Busbar: The grounding connection point for telecommunications systems and equipment in the area typically served by a Telecommunications Room other than the MDF.

D. TBB - Telecommunications Bonding Backbone: A bonding conductor that interconnects telecommunications main grounding busbar (TMGB) to the telecommunications grounding busbar (TGB).

E. BCT - Bonding Conductor for Telecommunications that bonds the TMGB to the electrical power ground.

F. GE - Grounding Equalizer: A conductor that interconnects elements of telecommunications grounding infrastructure.

G. Exothermic Weld: A method of permanently bonding two metals together by controlled heat reaction resulting in a molecular bond.

1.5 SUMMARY

A. Telecommunications Main Grounding Bus Bar Connection to the Electrical Ground must be an exothermic weld. When making exothermic welds, wire brush or file the point of contact to a bare metal surface. Use exothermic welding cartridges and molds in accordance with the manufacturer's recommendations. After welds have been made and cooled, brush slag from the weld area and thoroughly cleaned the joint area. Notify the Resident Engineer prior to backfilling any ground connections.

B. Provide ground lug for each 19” rack. Racks shall be grounded to wall mounted ground bus bar using #6 AWG stranded, green jacketed, insulated copper conductor. Furnish all required bonding material and hardware, and bond to building grounding electrode subsystem TMGB in MC. If crimp connectors are used to bond the #6 AWG wire, follow NEC bonding procedures/specifications.

C. Ground all telecommunication hardware such as cable ladder, conduit, equipment racks, protection units and shielded cabling with #6AWG ground wire.

D. An inert dielectric material shall separate dissimilar metals apt to corrode through electrolysis under the environmental operating conditions specified.

E. Telecommunications Grounding Bus Bars and grounding wires connecting to main building grounding electrode system provided by Electrical Contractor.

PART 2 - PRODUCTS

2.1 TELECOMMUNICATIONS BUSBARS

A. Material: Copper, 1/4” thick (aluminum not permitted).

B. Pre-drilled

1. 3/8" Diameter.
2. Hole spacing per ANSI Joint Standard J-STD-607-A.
3. Hole pattern shall accommodate two-hole lugs.

C. Busbars shall be listed by a nationally recognized testing laboratory.

D. Telecommunications Main Grounding Busbar (TMGB)

1. Chatsworth #10622-020 ground busbar with Chatsworth #10622-000 busbar insulators or equivalent, 20"x4" minimum.

E. Telecommunications Grounding Busbar (TGB)

1. Chatsworth #10622-012 ground busbar with Chatsworth #10622-000 busbar insulators or equivalent, 12"x4" minimum.

2.2 GROUNDING JOINTS/SPLICES

A. Grounding conductor joints/splices shall be mechanical type, copper alloy, with a minimum of two bolts and a separate section for each conductor equal to Burndy "QPX", OZ/Gedney "XTP" or "PMX" or Penn-Union "VX" or copper compression type with two (2) indents equal to Burndy, T&B or Blackburn.

B. Grounding conductor terminations (lugs) shall be single barrel, mechanical screw type, copper alloy with machined contact surfaces equal to OZ type "SL", T&B, or Burndy or copper compression type with two (2) indents equal to Burndy, T&B or Blackburn.

2.3 BONDING CONDUCTORS

A. Material: Stranded copper (aluminum not permitted).

B. Cable Tray Bonding Conductor: Green #8 AWG insulated bonding jumper (12" max) with appropriate lugs or manufactured braided copper grounding jumper equal to B-Line #CAM-GJ, T&B #BD12, OZ/Gedney type "FB" or Mono-Systems.

C. Equipment Frame Bonding Conductor; Panduit #TRGK672 Telecommunications Rack Grounding Kit.

D. Bonding Conductor (BC): Green insulated copper bonding conductor, size as required by NEC.

E. The BC shall be, as a minimum, the same size as the TBB.

F. Telecommunications Bonding Backbone (TBB): Green insulated copper conductor, minimum size of No. 6 AWG.

G. The TBB shall be sized as indicated on drawings. Where not indicated size at 2 kcmil per linear foot of conductor length up to a maximum size of 3/0 AWG. Insulation shall meet fire ratings of its pathway.

Table 1	
Sizing of the TBB	
TBB length (ft)	TBB Size (AWG)
Less than 13	6
14-20	4
21-26	3
27-33	2
34-41	1
42-52	1/0
53-66	2/0
Greater than 66	3/0

H. Exothermic Connector Manufacturers:

1. Erico Products (Cadweld)
2. Burndy Corporation (Therm-O-Weld)
3. OZ Gedney
4. Owner approved equal

PART 3 - EXECUTION

3.1 EXAMINATION

A. Install products in accordance with manufacturer’s instructions.

B. Provide the required elements and associated hardware necessary to provide a complete Telecommunications Grounding Infrastructure as specified.

C. TMGB

1. Locate the TMGB at 7’ AFF fastened to the plywood backboard near the outside plant entrance conduits in the “MDF”.
2. TMGB shall be installed so that the BC for telecommunications is as short and straight as possible.
3. Conductor shall be installed in continuous 1 conduit.

D. TGB

1. Locate the TGB at 7' AFF fastened to the plywood backboard near the copper riser termination in each "IDF".
2. TGB shall be installed so that the TBB for telecommunications is as short and straight as possible.

E. TBB

1. Install non insulated copper grounding conductor in 1" conduit TMGB to each TGB.

F. Grounding Conductor Joints/Splices

1. Install mechanical type, copper alloy, with a minimum of two bolts and a separate section for each conductor or copper compression type with two (2) indents.
2. Install manufactured insulating cover or heavy tape insulation over joints/splices.

G. Grounding Conductor Joints/Splices

1. Install Green #8 AWG bonding jumper (12" max) with appropriate lugs at each cable tray joint or install manufactured braided copper grounding jumper equal to B-Line #CAM-GJ, T&B #BD12, OZ/Gedney type "FB" or Mono-Systems.
2. Install Green #8 AWG grounding conductor with appropriate lugs from side of cable tray down to TMGB or TGB. Drill and tap side of cable tray (for appropriate size bolt, 1/4" x 20 min.), making sure that bolt does not extend into wire management part of tray.

H. Grounding of Equipment Frame

1. Install manufactured insulating cover or heavy tape insulation over joints/splices.

I. ANSI J-STD-607-A, Commercial Building. Grounding/Bounding Requirements-Joint Standard for Commercial Building Grounding (Earthing) and Bonding Requirements for Telecommunications, 2002*.

J. Follow IEEE 1100, IEEE Recommended Practice for Powering and Grounding Sensitive Electronic Equipment.

K. Follow NEC, NFPA 780.

L. Bonding connections should be made by using:

1. Double crimp connectors only for all horizontal runs (cabinets trays etc.). Use listed hardware that has been laboratory tested. For double crimp connectors use 2-hole type connector.
2. Exothermic welding (per NEC) within the ground electrode system, for parts of a grounding system that are subject to corrosion or that must carry high currents reliably, or for locations that require minimum maintenance. Exothermic weld to be

used on the Telecommunications Bonding Backbone (TBB) conductor for all connections.

3.2 QUALITY CONTROL

A. Inspect grounding and bonding system connections and conductors for proper installation and tightness.

3.3 DOCUMENTATION

A. Provide documentation of actual locations of grounding electrodes, busbars and backbone grounding conductors.

END OF SECTION 270526

SECTION 270528
INTERIOR COMMUNICATIONS PATHWAYS

PART 1 - GENERAL

1.1 SUMMARY

A. This section includes specifications for the installation of interior communications pathways.

B. Related Documents: Drawings and general provisions of the Contract, including General and Supplementary Conditions and Division - 1 Specification Sections, apply to the work of this Section.

C. Interior Communication Pathways are defined to include, but are not limited to inner duct, conduit, pull boxes, cable hooks, cable trays, supports, accessories, associated hardware and fire stopping materials.

1.2 REFERENCES

Section 270000 in its entirety shall be included as part of this specification.

A. Related Sections:

1. Section 01
2. Section 263353: Telecommunications Uninterruptible Power Supply (UPS)
3. Section 270000: Communications
4. Section 270526: Telecommunication Grounding and Bonding
5. Section 270528: Interior Communications Pathways
6. Section 270543: Exterior Communication Pathways
7. Section 270553: Identification and Labeling of Communication Infrastructure
8. Section 271100: Communication Room Fittings
9. Section 271300: Backbone and Riser Media Infrastructure
10. Section 271500: Horizontal Media Infrastructure
11. Section 272100: Data Communication Network Equipment
12. Section 280500: Electronic Safety and Security
13. Section 281300: Access Control System (ACS)
14. Section 282300: Digital Video Surveillance System (DVSS)

B. Conflicts:

1. Between referenced requirements: Comply with the one establishing the more stringent requirements.

2. Between reference requirements and contract documents: Comply with the one establishing the more stringent requirements.

1.3 QUALITY ASSURANCE

A. Verify conduit, raceway, cable tray, and cable hook runs do not interfere with existing or new systems within each facility.

B. Fire stopping: Manufacturer trained and approved installer to perform fire stopping work who has specialized in the installation of work similar to that required for this project.

C. Communication Pathway minimum Clearances:

1. Motors or transformers: 4 feet
2. Power cables and conduits: 12 inches parallel, 3 inches crossover
3. Fluorescent lights: 5 inches
4. Above ceiling tiles: 3 inches
5. Access above cable tray: 12 inches
6. Hot Flues, Steam pipes, Hot water pipes and other hot surfaces: at least 6”

D. Furnish products of latest proven design, new and in current production. Do not use obsolete components or out-of-production products.

E. Assure that the "as installed" system is correctly and completely documented including engineering drawings, manuals, and operational procedures in such a manner as to support maintenance and future expansion of the system.

F. All installed materials and accessories shall be new from the manufacturer. No used components will be accepted by the customer.

G. All Documentation submittals shall be reviewed by the supervising RCDD and stamped prior to submittal.

H. Contractor Qualifications:

1. The Contractor shall submit references and other related evidence of installation experience for a period of three years prior to the issue date of this Specification.
2. ALL work shall be supervised on-site by a BICSI RCDD. Must demonstrate knowledge and compliance with all BICSI, ANSI/TIA, UL, and NEC standards and codes. Contractor shall submit proof of RCDD designation.

I. The customer retains the right to have access and inspect all work during the entire duration of the project and any items that do not adhere to the standards, reference, contract, bid, or project documents will be corrected immediately at NO cost to OWNER.

PART 2 - PRODUCTS

2.1 GENERAL

A. Where conduit, pull boxes, cable tray and other raceway sizes are not specifically shown on contract drawings. All communication pathways shall be sized in accordance with the requirements of BICSI and the NEC.

B. All raceways shall be rigid metal conduit. Raceways installed in stud walls or above suspended ceilings shall be Electrical Metallic Tubing.

C. All backbone and riser conduits installed shall be populated with MaxCell flexible innerduct. Cable fill ratio not to exceed 40%.

2.2 INTERIOR COMMUNICATIONS CONDUIT

A. MANUFACTURES:

1. Allied
2. Triangle
3. Wheatland
4. Owner approved equal

B. Rigid Steel Conduit shall pass all bending, ductility, and thickness of zinc coating in ANSI C80.1 and UL 6. Conduit shall be galvanized have threaded end with 1” minimum size and 4” maximum size. Fittings shall be cast iron or alloy steel, threaded and galvanized.

C. Intermediate Metal Conduit (IMC) shall be manufactured in accordance with UL 1242. Conduit shall be low carbon, hot-dipped galvanized inside and out, with threaded ends, 1” minimum size, and 4-inch maximum size. Fittings shall be cast iron or alloy steel, threaded and galvanized.

D. Electrical Metallic Tubing (EMT) shall be manufactured in accordance with UL 797 and ANSI C80.3. EMT shall be high-strength, zinc-coated, 1-inch minimum size. EMT may be used for sizes greater than 2" where physically protected. EMT shall not be utilized for service entrance conductors. Fittings shall be of same finish and material as tubing. Fittings shall be compression type with insulated throat.

E. Expansion Joint Fittings: OZ type AX or Appleton type XJB, watertight, permitting two-way movement up to 4 inches, equipped with bonding jumpers around or through each fitting.

F. Thruwall Sealing Fittings: Type WSK by O-Z Gedney Company.

G. Fire-Seal Fittings: Type CFSI by O-Z Gedney Company.

H. Sealing Material for Sealing Fittings: Chico X Fiberdam, and Chico A sealing compound, or Chico A-P interpak by Crouse-Hinds or Apelco sealing cement and fiber filler by Appleton.

I. Insulated Bushings: Type B or SBT, as applicable, by O-Z Gedney or series B1900, series BU500 or series TC700, as applicable, by Steel City.

J. Provide a measured pull tape in each empty conduit, empty innerduct for backbone and riser pathways.

K. Provide a pull string for all horizontal conduits with a minimum pulling tension of 200 pounds.

L. Thread lubricant/sealant shall be Crouse-Hinds type STL or T & B Kopr-Shield except, when required on joints for heat producing elements such as lighting fixtures; it shall be Crouse-Hinds type HTL.

M. PVC Conduit shall not be used in intercommunication pathways. Except when encased in concrete.

2.3 FLEXIBLE MULTI-CELL INNERDUCT

A. Manufacturers:

1. MaxCell
2. Or Owner approved equivalent

B. Flexible Innerduct

1. Flexible innerduct is the OWNER standard for multi-path applications within conduit.
2. All riser/backbone fiber shall be installed in flexible innerduct.
3. Flexible Innerduct shall be UL Listed with Flame Propagation compliant with UL 2024A.
4. All flexible innerduct shall be installed per manufacture requirements.
5. Only manufacturer’s fittings, transition adapters, terminators, accessories, and installation kits shall be used.
6. All flexible innerduct will be populated with a measured pull tape.
7. All interior flexible innerduct shall be plenum rated.
8. Flexible innerduct shall only be used when installed in conduit and shall consist of a different color for the Maxcell.

9.

MaxCell 4” 3 Cell

Min Conduit ID	Suggested Product	Max # of Packs	Max # of Cables	Maximum Cable Diameter per Cell	Rec. Pull Length*	Max Pull Length*
3"	MaxCell 4" 3 Cell	1	3	1.34"	1500'	2000'
4"	MaxCell 4" 3 Cell	2	6	1.34"	1500'	2500"
5"	MaxCell 4" 3 Cell	3	9	1.34"	1500'	2500'
6"	MaxCell 4" 3 Cell	4	12	1.34"	1500'	2500'

*Use of Optical Fiber Nonconductive Riser (OFNR) cable may result in reduced pulling lengths

MaxCell 3” 3 Cell

Min Conduit ID	Suggested Product	Max # of Packs	Max # of Cables	Maximum Cable Diameter per Cell	Rec. Pull Length*	Max Pull Length*
3"	MaxCell 3" 3 Cell	2	6	1.03"	1200'	2000'
4"	MaxCell 3" 3 Cell	3	9	1.03"	1500'	2500"
5"	MaxCell 3" 3 Cell	4	12	1.03"	1500'	2500'
6"	MaxCell 3" 3 Cell	5	15	1.03"	1500'	2500'

*Use of Optical Fiber Nonconductive Riser (OFNR) cable may result in reduced pulling lengths

MaxCell 2” 3 Cell

Min Conduit ID	Suggested Product	Max # of Packs	Max # of Cables	Maximum Cable Diameter per Cell	Rec. Pull Length*	Max Pull Length*
2"	MaxCell 2" 3 Cell	1	3	.70"	800'	1500'

*Use of Optical Fiber Nonconductive Riser (OFNR) cable may result in reduced pulling lengths

2.4 INNERDUCT

A. Manufacturers:

1. Carlon
2. Pyramid
3. Or OWNER approved equivalent

B. Innerduct

1. All fiber placed in cable tray shall be installed in corrugated innerduct.
2. One-inch corrugated non-metallic innerduct.

3. Innerduct shall be UL Listed with Flame Propagation compliant with UL 2024.
4. Only manufacturer's fittings, transition adapters, terminators, and fixed bends shall be used.
5. All empty innerducts will be populated with a measured pull tape.
6. Where more than one innerduct is routed in a conduit, each innerduct shall consist of a different color from end to end (ex. Orange, Blue, Black, and White). Do not couple innerducts of different colors without OWNER approval.
7. All interior innerduct shall be plenum rated, unless installed in conduit.

2.5 CABLE TRAYS

A. Subject to compliance with requirements, provide products by one of the following:

1. Cooper B-Line, Inc.
2. Cope, T. J., Inc.; a subsidiary of Allied Tube & Conduit.
3. GS Metals Corp.; GLOBETRAY Products.
4. MONO-SYSTEMS, Inc.
5. PW Industries

B. Cable Trays

1. Except as otherwise indicated, provide metal cable trays, of types, classes and sizes indicated; with splice plates, bolts, nuts and washers for connecting units. Construct units with rounded edges and smooth surfaces; in compliance with applicable standards; and with the following additional construction features.
2. Materials and Finish: Material and finish specifications for each tray type are as follows:
   a. Aluminum: Straight section and fitting side rails and rungs shall be extruded from Aluminum Association Alloy 6063. All fabricated parts shall be made from Aluminum Association Alloy 5052.
   b. Pre-galvanized Steel: Straight sections, fitting side rails, rungs, and covers shall be made from steel meeting the minimum mechanical properties in accordance with ASTM A653 SS.
   c. Hot-dip Galvanized Steel: Straight section and fitting side rails and rungs shall be made from steel meeting the minimum mechanical properties of ASTM A1011 SS, Grade 33 for 14 gauge and heavier, ASTM A1008, Grade 33, Type 2 for 16 gauge and lighter, and shall be hot-dip galvanized after fabrication in accordance with ASTM A123. All covers and splice plates must also be hot-dip galvanized after fabrication; mill galvanized covers are not acceptable for hot-dipped galvanized cable tray.
   d. Stainless Steel: Straight section and fitting side rails and rungs shall be made of AISI Type 304 or Type 316 stainless steel. Transverse members (rungs) or corrugated bottoms shall be welded to the side rails with Type 316 stainless steel welding wire.

2.6 TYPE OF TRAY SYSTEMS

A. Ladder type trays shall consist of two longitudinal members (side rails) with transverse members (rungs) welded to the side rails. Rungs shall be spaced 6 or 12 inches on center. Rungs shall have a minimum cable-bearing surface of 7/8 inch with radiused edges. No portion of the rungs shall protrude below the bottom plane of the side rails. Each rung must be capable of supporting the maximum cable load, with a safety factor of 1.5 and pass all tests in accordance with NEMA VE-1, section 5.4.

B. Ventilated trough type trays shall consist of two longitudinal members (side rails) with a corrugated bottom welded to the side rails. The peaks of the corrugated bottom shall have a minimum flat cable-bearing surface of 2-3/4 inches and shall be spaced 6 inches on center. To provide ventilation in the tray, the valleys of the corrugated bottom shall have 2-1/4 inch by 4 inch rectangular holes punched along the width of the bottom.

C. All tray sizes and types shall have a minimum of 2 inch usable load depth.

D. All straight sections shall be supplied in standard 10 foot length, except where shorter lengths are permitted to facilitate tray assembly lengths as shown on drawings.3000

E. Tray widths shall be 12, 18, 24, or 36 inches as indicated on the drawings.

F. All fittings must have a minimum radius of 12, 24, 36 or 48 inches as indicated on the drawings.

G. Splice plates shall be the bolted type made as indicated below for each tray type. The resistance of fixed splice connections between adjacent sections of tray shall not exceed .00033 ohms. Splice plate construction shall be such that a splice may be located anywhere within the support span without diminishing rated loading capacity of the cable tray.

1. Aluminum Tray - Splice plates shall be made of 6063-T6 aluminum, using four square neck carriage bolts and serrated flange locknuts. Hardware shall be zinc plated in accordance with ASTM B633, SC1.
2. Steel (including Pre-galvanized and Hot-dip galvanized) - Splice plates shall be manufactured of high strength steel, meeting the minimum mechanical properties of ASTM A1011 HSLAS, Grade 50, Class 1. Hardware shall be zinc plated in accordance with ASTM B633 SC1 for pre-galvanized cable trays, or Chromium Zinc in accordance with ASTM F-1136-88 for hot-dip galvanized cable trays.

H. Cable Tray Support shall be placed so that the support spans do not exceed maximum span indicated on drawings or by the manufacturer. Supports shall be Trapeze style support. Cable trays installed adjacent to walls shall be supported on wall mounted brackets as specified by the manufacturer.

I. Trapeze hangers shall be supported by 3/8 inch (minimum) diameter all thread rods.

J. Accessories shall be furnished as required to protect, support, and install a cable tray system. Accessories shall consist of but are not limited to; section splice plates, expansion plates, blind-end plates, specially designed ladder dropouts, barriers, etc.

K. All cable tray components and accessories will be from the same manufacturer. Parts from different manufacturer will not be intermixed.

2.7 WIRE BASKET CABLE TRAY

A. General

1. Provide tray of sufficient size and load rating to support the cabling per the National Electrical Code (current edition) requirements for cable fill.
2. Tray must be UL listed for use as an equipment ground conductor.
3. All cabletray and accessories shall be from the same manufacturer.

B. Use in Data Center and Office Space.

C. Tray widths shall be 12, 18, 24, or 36 inches as indicated on the drawings.

1. Provide steel (ASTM A510) mesh cable tray with black powder coat finish.
2. All cuts and turns must be made using manufacturers recommended process and tools.
3. All cuts must be smooth. There shall be no sharp edges or mesh steel on any portion of the tray.
4. Provide tray with solid bottom insert for full length of tray. Insert size to match tray size and be of the same manufacturer. Leave gap in solid bottom insert panels where cables will drop out of tray to termination location.
5. Install waterfall inserts (same color as cabletray) at all cable drop-out locations.
6. Maintain load capacities per the cable tray manufacturers' recommendations.
7. Provide tray size as shown on the contract documents. All sizes shown are nominal interior dimensions. All tray sizes and types shall have a minimum of 4 inch usable load depth unless otherwise noted on the contract drawings.
8. Ground tray as recommended by the manufacturer. Remove tray finish at ground connectors if required to provide UL Listed ground. Use manufacturer's recommended quantity of splices to connect sections and at places where tray is cut.
9. Splice plates shall be the bolted type made as indicated below for each tray type. The resistance of fixed splice connections between adjacent sections of tray shall not exceed 00033 ohms. Splice plate construction shall be such that a splice may be located anywhere within the support span without diminishing rated loading capacity of the cable tray.
10. Use manufacturers recommended materials and installation methods. Use only radius turns. Where interior bend is 90 degrees due to nature of mesh tray, provide additional manufacturer components as required to maintain a smooth radius (radius shield, cable rollers, etc).

B. Products

1. CPI's GlobalTrac Wire Mesh Cable Tray System
2. Include required accessories for a complete cable runway inside Data Center and Office Spaces.

2.8 CABLE LADDER

A. Use in MDF and IDF

B. Specifications

1. UL Classified for suitability (as an equipment grounding conductor only)
2. Minimum 12" wide
3. Support at 5' intervals
4. Install at 7' AFF
5. Secure to equipment racks with approved hardware
6. Crossmembers at 9" intervals
7. 10-foot sections
8. Bond to TMGB/TGB as required with a #6 AWG bonding conductor

C. Products

1. Universal Cable Runway Section
2. Chatworth 1275-X12 or OWNER approved equal
3. Include required accessories for a complete cable runway inside MDF and IDF

2.9 CABLE HOOK SYSTEMS

A. Cable hooks shall have a flat bottom and provide a minimum of 1-5/8 inch cable bearing surface.

B. Cable hooks shall have 90-degree radiused edges to prevent damage while installing cables.

C. Cable hooks shall be designed so the mounting hardware is recessed to prevent cable damage.

D. Cable hooks shall have a cable latch retainer to provide containment of cables within the hook. The retainer shall be removable and reusable.

E. Cable hooks shall be factory assembled for direct attachment to walls, hanger rods, beam flanges, purlins, strut, floor posts, etc. to meet job conditions.

F. Cable hooks for non-corrosive areas shall be pre-galvanized steel, ASTM A653. Where additional strength is required, cable hooks shall be spring steel with a zinc-plated finish, ASTM B633, SC3.

G. Cable hooks for corrosive areas shall be stainless steel, AISI Type 304.

H. All Cable Hook shall be supported with minimum ¼" all thread with the appropriate fasteners.

2.10 FIRESTOPPING MATERIALS

A. Manufacturers:

1. Johns Manyille
2. Hilti
3. 3M

B. Description:

1. Performance requirements: Provide firestopping systems that are produced and installed to resist spread of fire according to requirement indicated, resist passage of smoke and other gases, and maintain fire resistance rating of assembly.
   a. F- Rated Systems: in accordance with ASTM E 814
   b. T- Rated Systems: in accordance with ASTM E 814
2. Fire stopping flame spread performance requirements: Provide products with flame-spread ratings of less than 25 and smoke development ratings of less than 50 as determined in accordance with ASTM E 84.
3. Fire Stopping UL performance requirements: Provide products with UL ratings specified for assembly indicated as determined in accordance with UL listings.

2.11 JUNCTION BOXES/PULL BOXES

A. All pull boxes shall be constructed with a minimum of 14-gauge galvanized steel with an ANSI 61 grey polyester powder finish inside and out over phosphatized surfaces or galvanizes steel unless otherwise specified.

B. All pull boxes shall have flat, removable covers fastened with plated steel screws with unique keyhole screw slots in the cover to permit removal of the cover without extracting screws unless otherwise specified.

1. All removable box covers shall be connected to box with a safety strap or chain.

C. All pull boxes shall provide the appropriate provisioning for grounding.

D. All pull boxes shall be NEMA Type 1 and sized according to the table below unless otherwise specified.

Maximum Trade Size of Conduit (inches)	Minimum Box Size (inches)			For Each Additional Conduit Increase Width (Inches)
	Width	Length	Depth	
1	4	16	3	2
1.25	6	20	3	3
1.5	8	27	4	4
2	8	36	4	5
2.5	10	42	5	6
3	12	48	5	6
3.5	12	54	6	6
4	15	60	8	8

2.12 CONDUIT PULL LINE

A. Description

1. Minimum pulling tension greater than 200 lb (900 N).
2. Ready-to-use cable pull line,
3. Use directly from the container.
4. Resists tangling when dispensing.
5. Rot and mildew resistant.
6. Handy reusable plastic dispenser pail with handle keeps the line dry.
7. Greenlee 430 or approved equivalent.

PART 3 - EXECUTION

3.1 GENERAL

A. Raceways shall be mechanically and electrically connected to all boxes and fittings and shall be properly grounded per NEC.

B. The routing and location of all conduits, cable tray, cable hooks and other raceways shall be coordinated with other trades prior to and during building construction to avoid delays and conflicts.

C. Where raceways pass through walls, partitions and floors, seal penetrations to provide a neat installation that will maintain the integrity of the waterproofing or fireproofing, as applicable, of the structure. Coordinate installation requirements with roofing installer where conduits pass through the roof.

D. All Raceways shall be run at least 6-inches from hot flues, steam pipes, hot water pipes and other hot surfaces.

E. All raceways entering a building from underground shall be sealed to prevent water, moisture, gas, or any other foreign matter from entering the building. Service conduits shall be sealed in accordance with NEC 230-8.

F. Contractor's on-site RCDD supervisor shall review, approve and stamp all shop drawings, coordination drawings and records drawings.

G. Do NOT route communication pathways under HVAC condensing units.

H. Expansion Fittings:

1. Raceways shall be provided with expansion fitting where necessary to compensate for thermal expansion and contraction.
2. Use expansion-deflection fittings on conduit crossing structural expansion joints and on exposed conduit funs where necessary. Provide bonding jumpers across fittings in metal raceways systems

3.2 CONDUIT INSTALLATION

A. Conduit shall be installed with threaded fittings and couplings.

B. All metallic couplings, connectors and fittings shall be malleable iron or steel and finished with zinc plating or by galvanizing.

C. All conduits shall be plugged immediately upon installation to prevent the entrance of construction dirt and debris. All conduits shall be swabbed and cleaned before wires are pulled.

D. All open conduits must be provided with a pull rope with a minimum pull tension of 200+ pounds.

E. Expansion fittings shall be utilized in all cases where conduits pass through building expansion joints. Fittings shall be of an approved weatherproof telescopic type permitting a movement of up to four inches and shall be provided with approved bonding jumpers around or through the fitting.

F. Connection of Conduit to pull / junction Boxes and Enclosures:

1. Connection to NEMA 1 type boxes and enclosures:
   a. Rigid conduit: Install insulated bushings and double locknuts.
   b. EMT: Install compression box connectors with insulated throats.
2. Connection to NEMA 3R, 4, 4X, and 12 type boxes: Install insulated bushings and sealing locknuts or hubs.

3. When conduits enter floor mounted enclosures from below and there is no sheet metal to which to attach; install grounding bushings on the conduit. Bond bushings to ground bus using a conductor the same size as required for an equipment grounding conductor sized for the given circuit.
4. Install sealing bushing within all conduits which have entered a building from outside, whether from above or below grade.

G. Each Conduit route shall be installed with the least amount bends as possible. No section of conduit shall be longer than 30m (100 ft) or contain more than two 90 degrees bends (offset is considered to be a 90 degree bend) between pull points, pull boxes or reverse bends.

H. The inside radius of bends in conduit shall be:

1. 6 times the internal diameter for 2-inches or less.
2. 10 times the internal diameter for greater than 2-inches.

I. A measured pull tape shall be placed in all installed conduit.

J. Any single conduit run extending from a Telecommunication Room (TR) shall not serve more than one outlets.

K. All communications conduits shall be identified with color coded orange tape marked "Communications" every 50 feet. Tag conduit termination points (to include J-box locations) with the origination and destination location.

L. Conduit shall be reamed to eliminate sharp edges and terminated with an insulated bushing.

M. Conduit protruding through the floor shall be terminated at a minimum of 3 inches above the floor surface.

N. All stubbed conduit ends shall be provided with a ground bushing.

O. All conduit penetrations shall be provided with the proper conduit sleeves.

1. Sleeves shall extend three inches AFF or four inches below finished ceiling, with a bushing.
2. Sleeves shall be installed in the communications room floor or ceiling a minimum of two to four inches on center from the wall.
3. Conduit floor sleeves shall be spaced to allow space for ground bushing and insulated bushing for cable protection.
4. Shall be installed in a single tier or row from left to right horizontally. If two tiers or rows are required the conduits shall be staggered minimum of 2 inches between tiers.
5. Cable support anchors shall be installed 18 to 24 inches above the sleeves.

P. All cable (horizontal, riser or backbone) wall or ceiling penetrations shall be provided with the proper conduit sleeves.

1. Sleeves shall extend three inches AFF or four inches below finished ceiling, with a bushing.
2. Sleeves shall be installed in the floor or ceiling a minimum of two to four inches on center from the wall.
3. Sleeves shall be installed in the walls at a minimum of two inches extended on each side of the wall.
4. Cable floor, ceiling and wall sleeves shall be spaced to allow space for ground bushing and insulated bushing for cable protection.
5. Shall be installed in a single tier or row from left to right horizontally.
6. If two tiers or rows are required the conduits shall be staggered minimum of 2 inches between tiers.
7. Cable support anchors shall be installed 18 to 24 inches above the sleeves.

Q. All conduit and cabinet entrances shall be sealed with an approved, re-enter able sealant material to prevent ingress of water, dust or other foreign materials.

R. Conduit shall not be embedded in the required fire protective covering of a structural member that is to be individually encased in accordance with BOCA.

S. Install all exposed conduit parallel or perpendicular to lines of existing construction and grouped together where possible, without interfering with use of premises or working areas. Prevent safety hazards and interference with operating and maintenance procedures.

T. Conduit Sizing and supports:

1. Support conduit 2 inches and larger at 10 feet on center maximum, and conduit 1½ inch and smaller at eight feet on center maximum.
2. Fasten 1½ inch and smaller conduit to concrete, masonry or steel with either one-hole malleable iron conduit straps, or "Korn" clamps, or U-bolts; for larger diameters, use two-hole straps. Use "clamp backs" for strapping conduits to planar surfaces.
3. Multiple runs shall be supported on channel adequately secured to walls or hung from structure above with conduits fastened to channel with clamps designed for the purpose.
4. Cable fill rates shall not exceed 40 percent of the cross-sectional area of the installed conduit unless greater fill is approved by Engineer. Contractor shall submit request for approval for installing cables with greater than 40 percent conduit fill. Request will be approved on a case-by-case basis.

U. Horizontal Conduit Routes:

1. Horizontal (station) conduit is defined as the conduit run between the communications outlet and the cable tray or communications room as indicated on Drawings.

2. Each horizontal conduit run shall be a one-inch metallic conduit and shall be home run from each communications outlet box to the equipment room, terminating equipment or cable tray, as indicated in Drawings.
3. Each route shall be installed with the least amount of conduit bends. Each single horizontal conduit run shall be provided with a junction or pull box every 30m (100 ft) or contain more than two 90 degrees bends (offset is considered to be a 90 degree bend).
4. Each dual horizontal conduit run shall be provided with a junction or pull box every 30m (100 ft) or contain more than two 90 degrees bends (offset is considered to be a 90 degree bend). The quantity of conduits entering the junction or pull box shall equal the number of conduits exiting the junction or pull box.
5. Each terminating (outlet end) conduit connection shall be provided with the proper connecting insulated bushing or fitting.
6. Each originating end (communications room end) shall be provided with the proper connecting insulated ground bushing and properly bonded to ground.

V. Horizontal conduit entrance in communications rooms – wall entry

1. Horizontal conduits shall enter the communications room wall 12 to 18 inches above the top of the cable tray. Maintain cable bend radius with supporting device as required.
2. Conduit wall stubs shall be spaced in increments equal to the conduit outside diameter (OD) from each other.
3. All conduit wall stubs shall be extended to the terminating equipment, electronics, or cable tray, as noted in Drawings.
4. Conduit crossovers are not permitted.

W. Horizontal conduit entrance in communications rooms – ceiling entry

1. Horizontal conduits shall enter or be extended from the equipment room ceiling 12 to 18 inches above the top of the cable tray.
2. Ceiling conduit stubs shall be spaced in increments equal to the conduit OD from each other.
3. All ceiling conduit stubs shall be extended to the terminating equipment, electronics, or cable tray, as noted in Drawings.
4. Conduit crossovers are not permitted.

X. Horizontal conduit entrance in communications rooms – floor entry

1. Horizontal conduits shall enter the communications room floor two inches to four inches on center from the wall and shall be stubbed 3 inches AFF.
2. Conduit floor stubs shall be spaced in increments equal to the conduit OD from each other.
3. Conduit crossovers are not permitted.
4. Provide vertical ladder rack or d-hooks properly secured to wall to transverse cable to cable tray over-head.

Y. Horizontal conduit to cable tray

1. Non-communications conduit shall NOT be attached to the cable tray in any fashion.
2. Conduit terminating end shall be attached to cable tray side rail with "conduit-to-cable tray" clamps. No other form of attachment shall be permitted.
3. Top or bottom cable tray conduit feeds and attachments are not permitted.

Z. Horizontal Junction/Outlet Boxes

1. Each horizontal conduit shall be terminated into an outlet box.
2. Each outlet box shall be a deep four-inch square junction box with a minimum of two one-inch knockouts on each of the sides.
3. Each conduit home run shall be provided with a deep 4-inch square junction box (w/cover) at 100-foot intervals and six inches above each ceiling and wall intersection.

AA. Riser conduit entrance in communications rooms – wall entry

1. Riser conduits shall enter the communications room wall a minimum of 24 inches above the top of the cable tray.
2. Conduit wall stubs shall be spaced in increments to equal the conduit OD from each other.
3. Riser conduits shall be installed in a single tier or row from left to right horizontally.
   a. If two tiers or rows are required, the conduits shall be staggered between tiers.
   b. No more than two tiers or rows are permitted.
4. All conduit wall stubs shall be extended to and over the cable tray to access cable tray pathway.
5. All riser conduit stubs shall be provided with the proper universal drop-out/ waterfall cable exit runway, which shall be supported by and mounted to channel strut.
6. Conduit crossovers are not permitted.

BB. Riser conduit entrance in communications rooms – floor entry

1. Riser conduits shall enter the communications room floor two inches to four inches on center from the wall and shall stub up six inches AFF.
2. Conduit floor stubs shall be spaced in increments to equal the conduit OD from each other.
3. Riser conduits shall be installed in a single tier or row from left to right horizontally.
   a. If two tiers or rows are required, the conduits shall be staggered between tiers.
   b. No more than two tiers or rows are permitted.
4. Exiting cable shall be extended to the bottom of the cable tray and be provided with cable support anchors and secured with supporting hardware every six inches above the conduit bushings.

5. Conduit floor stubs shall be extended 2 to 4 inches from wall on center and 3 inches above AFF.
6. The riser cable shall be extended in the cable tray to the terminating equipment, as noted in the Drawings.
7. Conduit crossovers are not permitted.

3.3 CABLE TRAY INSTALLATION

A. Cable tray shall be supported as follows:

1. Where tray is suspended above equipment cabinets it shall be supported by a Trapeze type hanger and per manufacture instructions. In all other applications, the tray shall be supported by uni-strut trapeze type hangers affixed to the structure above via minimum 3/8-inch threaded rod.
2. Threaded rod shall be fitted with a 6-inch long tube where it resides in cable tray to protect cables.
3. Minimum of 12 inches of vertical clearance above all cable tray.

B. Installation shall be in accordance with equipment manufacturer's instructions, and with recognized industry practices to ensure that cable tray equipment comply with requirements of NEC and applicable portions of NFPA 70B. Reference NEMA-VE2 for general cable tray installation guidelines.

C. Provide sufficient space encompassing cable trays to permit access for installing and maintaining cables.

D. Cable tray fitting supports shall be located such that they meet the strength requirements of straight sections. Install fitting supports per NEMA VE-2 guidelines, or in accordance with manufacturer's instructions.

E. A support must be place within 24 inches on each side of a connection or fitting.

F. Maintain a minimum of 12 inches of clearance above cable tray for cable installation. Maintain a minimum of 3 inches between ceiling tile and cable tray support.

G. Cable tray installation will be completed in one continuous run with no separations between sections.

H. Vertical cable or ladder racks shall be used to route cable up and down the wall.

I. Dropout/Water Fall of the same make and size of the cable tray shall be used to route cables in or out of the tray.

J. Matted “T” and elbows shall be used of the same make and size for all interchanges and directional changes

3.4 JUNCTION BOX/PULL BOX INSTALLATION

A. Pull boxes shall be installed in sections of conduit every 100 feet in length, that contain more than two 90-degree bends, or that contain bends that are 180 degrees or more in the aggregate.

B. A pull box shall NOT be used in lieu of a conduit bends.

C. All pull boxes shall be installed in an easily accessible location with unobstructed entry to the pull box access panel.

D. Pull boxes shall be supported on all four corners in such a manner that the pull box is not supported by the cable running through or conduit attached to the pull box.

E. Horizontal Junction/Outlet Boxes

1. Each horizontal conduit shall be terminated into an outlet box.
2. Each outlet box shall be a deep four-inch square junction box with a minimum of two one-inch knockouts on bottom and each of the sides.
3. Each conduit home run shall be provided with a deep 4-inch square junction box (w/cover) at 100-foot intervals and six inches above each ceiling and wall intersection.

3.5 CABLE HOOK INSTALLATION

A. Installation and configuration shall conform to the requirements of the ANSI/TIA Standards 568A & 569, NFPA 70 (National Electrical Code), and applicable local codes.

B. Cable hooks shall be capable of supporting a minimum of 30 pounds with a safety factor of 3.

C. Cable Hook spacing maximum 5 feet on center.

D. Maintain maximum cable sag between cable hooks of 12 inches.

E. Cable shall not touch ceiling tile or light fixtures. Provide minimum 3” vertical separation above ceiling tiles.

F. Do not fill cable hook greater than manufactures recommended guidelines, maximum 40% fill.

3.6 FIRESTOPPING MATERIAL INSTALLATION

A. Comply with manufacturer’s product data, including product technical bulletins, product catalog installation instruction, and product carton instruction for installation.

B. Verify substrate conditions are acceptable for product installation in accordance with manufacturer’s instructions.

C. Install fire stopping to comply with performance requirements specified herein.

1. Install fire stopping to comply with listed fire rated assemblies in accordance with ASTM and UL requirements
2. Installer shall be trained and approved by the manufacturer

D. Protect installed products from damage during construction operations until final completion.

E. Inspection: Code official or building inspectors to review proper installation using manufacturer guidelines.

END OF SECTION 270528

SECTION 270543
EXTERIOR COMMUNICATIONS PATHWAY

PART 1 - GENERAL

1.1 PROJECT SCOPE SUMMARY

A. Subject to the General and Special Conditions, this section shall specify underground ducts, and utility holes designated as maintenance holes, and hand holes.

B. Section Includes:

1. Rigid steel conduit.
2. Plastic conduit.
3. Plastic duct.
4. Utility holes, maintenance holes (MH), hand holes (HH)
5. Underground duct markers.

C. Division 31 – Trenching & Backfilling: Execution requirements for trenching, backfill and compaction required by this section.

1.2 REFERENCES

Section 270000 in its entirety shall be included as part of this specification.

A. Related Sections:

1. Section 01
2. Section 270000: Communications
3. Section 270526: Telecommunication Grounding and Bonding
4. Section 270528: Interior Communications Pathways
5. Section 270543: Exterior Communication Pathways
6. Section 270553: Testing Administration Identification
7. Section 271100: Communication Room Fittings
8. Section 271300: Backbone and Riser Media Infrastructure
9. Section 271500: Horizontal Media Infrastructure
10. Section 272100: Data Communication Network Equipment
11. Section 274100: Audio Video System
12. Section 280500: Electronic Safety and Security
13. Section 281300: Access Control System (ACS)
14. Section 282300: Digital Video Surveillance System (DVSS)

1.3 DESCRIPTION

A. Interconnected system of encased conduits, ducts, MH, and HH to distribute medium-voltage power, low-voltage power, data communications, and video.

B. Conduit and duct routing and utility hole locations are shown in approximate locations unless dimensions are indicated. Field route and locate to complete duct bank system.

C. Underground Ducts:

1. Medium-voltage: Use rigid plastic underground conduit.
2. Low-voltage: Use rigid plastic underground conduit.
3. Data communication: Use rigid plastic underground conduit.

D. Above ground conduit shall be rigid, hot-dipped galvanized steel manufactured according to UL and ANSI No. C80.1, threaded before galvanizing. Install according to NEC and AISI Handbook for Steel Electrical Raceways.

E. Conduit size shall be as indicated on the Drawings.

1.4 COORDINATION

A. Refer to General or Special Conditions.

B. Refer to Division 26, Electrical Work

C. Coordinate Work with existing underground utilities and structures.

1.5 QUALITY ASSURANCE

A. Verify duct banks do not interfere with existing or new underground facilities.

B. Assure that the "as installed" system is correct and complete per construction documents: including engineering drawings, manuals, and operational procedures in such a manner as to support maintenance and future expansion of the system.

C. Owner/Architect/Engineer retains the right to access and inspect all work during the entire duration of the project and any items that do not adhere to the standards, reference, contract, bid, or project documents will be corrected immediately at the expense of the contractor.

D. UL Compliance: Provide products that are UL-classified and labeled.

PART 2 - PRODUCTS

2.1 RIGID STEEL CONDUIT

A. Rigid Steel Conduit: ANSI C80.1.

B. Fittings: NEMA FB 1, steel.

2.2 PLASTIC CONDUIT AND DUCTS

A. Rigid Plastic Conduit: NEMA TC 2, Schedule 40 PVC, with fittings and conduit bodies to NEMA TC 3.

2.3 MAINTENANCE HOLE (MH)

A. Nominal Inside Dimensions : 3'H x 3'W x 3'L

1. Oldcastle polymer 3636 or approved equal.

B. Maintenance Hole shall include the following:

1. Description: Pre-cast concrete utility hole with standard duct entrance configuration or multi-knockout panels.
2. Minimum ANSI Tier 22 rating
3. Furnish cover marked "COMM" for communications.
4. Repair chipped knockouts with grout.
5. Seal all unused knockouts and spare ducts with duct plugs
6. Segmented Thin Wall Knockouts
7. Flush Solid Cover
8. Penta Head Bolt
9. Penta Coil Thread Bolt
10. Captive Bolt Retainer
11. EMS Marker (E)
12. Mouseholes/Knockouts
13. Rack Mount
14. Cable Racks/Cable Arms
15. Unistrut
16. Pulling Eye - 1,000 lb and 3,000 lb
17. Ground Buss (F)
18. Dividers
19. Racking Provision
20. Lid Gaskets*
21. Solid Bottom
22. Custom Marking Plate (Polymer)

2.4 HAND HOLE (HH)

A. Nominal Inside Dimensions: 2'x3'x3'

1. Oldcastle polymer 2436-36 or approved equal.

B. Handhole Hole shall include the following:

1. Description: Pre-cast concrete utility hole with standard duct entrance configuration or multi-knockout panels.
2. Minimum ANSI Tier 22 rating
3. Furnish cover marked “COMM” for communications.
4. Repair chipped knockouts with grout.
5. Seal all unused knockouts and spare ducts with duct plugs
6. Segmented Thin Wall Knockouts
7. Flush Solid Cover
8. Penta Head Bolt
9. Penta Coil Thread Bolt
10. Captive Bolt Retainer
11. EMS Marker (E)
12. Mouseholes/Knockouts
13. Rack Mount
14. Cable Racks/Cable Arms
15. Unistrut
16. Pulling Eye - 1,000 lb and 3,000 lb

2.5 UNDERGROUND DUCT MARKERS

A. Underground Warning Tape: 4-inch wide detectable plastic tape (6 mil thickness min.) with warning label stating, “CAUTION: BURIED COMMUNICATIONS LINE.”

1. Follow NESC411E, and NEC300.50
2. Metallic tape or metallic strip for above ground detection
3. Orange tape for Communications line

2.6 MANUFACTURERS

A. Conduit Measuring Tape:

1. Neptco
2. Greenlee
3. Garvin Industries

B. Caution Tape:

1. Reef Industries
2. Repnet
3. Panduit

C. Maintenance/Hand Hole Covers

1. Oldcastle
2. Locke Solutions
3. Neehan Foundry
4. Dabico Inc.
5. Inland Foundry

2.7 FLEXIBLE MULTI-CELL INNERDUCT

A. Manufacturers:

1. MaxCell
2. Or HCCS approved equivalent

B. Flexible Innerduct

1. Flexible innerduct is the HCCS standard for multi-path applications within conduit.
2. All riser/backbone fiber shall be installed in flexible innerduct.
3. Flexible Innerduct shall be UL Listed with Flame Propagation compliant with UL 2024A.
4. All flexible innerduct shall be installed per manufacture requirements.
5. Only manufacturer's fittings, transition adapters, terminators, accessories, and installation kits shall be used.
6. All flexible innerduct will be populated with a measured pull tape.
7. All interior flexible innerduct shall be plenum rated.
8. Flexible innerduct shall only be used when installed in conduit and shall consist of a different color for the Maxcell.

C. MaxCell 4” 3 Cell

Min Conduit ID	Suggested Product	Max # of Packs	Max # of Cables	Maximum Cable Diameter per Cell	Rec. Pull Length*	Max Pull Length*
3"	MaxCell 4" 3 Cell	1	3	1.34"	1500'	2000'
4"	MaxCell 4" 3 Cell	2	6	1.34"	1500'	2500"
5"	MaxCell 4" 3 Cell	3	9	1.34"	1500'	2500'
6"	MaxCell 4" 3 Cell	4	12	1.34"	1500'	2500'

*Use of Optical Fiber Nonconductive Riser (OFNR) cable may result in reduced pulling lengths

D. MaxCell 3” 3 Cell

Min Conduit ID	Suggested Product	Max # of Packs	Max # of Cables	Maximum Cable Diameter per Cell	Rec. Pull Length*	Max Pull Length*
3"	MaxCell 3" 3 Cell	2	6	1.03"	1200'	2000'
4"	MaxCell 3" 3 Cell	3	9	1.03"	1500'	2500"
5"	MaxCell 3" 3 Cell	4	12	1.03"	1500'	2500'
6"	MaxCell 3" 3 Cell	5	15	1.03"	1500'	2500'

*Use of Optical Fiber Nonconductive Riser (OFNR) cable may result in reduced pulling lengths

MaxCell 2” 3 Cell

Min Conduit ID	Suggested Product	Max # of Packs	Max # of Cables	Maximum Cable Diameter per Cell	Rec. Pull Length*	Max Pull Length*
2"	MaxCell 2" 3 Cell	1	3	.70"	800'	1500'

*Use of Optical Fiber Nonconductive Riser (OFNR) cable may result in reduced pulling lengths

2.8 INNERDUCT

A. Manufacturers:

1. Carlon
2. Pyramid
3. Or HCCS approved equivalent

B. Innerduct

1. All fiber placed in cable tray shall be installed in corrugated innerduct.
2. One-inch corrugated non-metallic innerduct.
3. Innerduct shall be UL Listed with Flame Propagation compliant with UL 2024.
4. Only manufacturer's fittings, transition adapters, terminators, and fixed bends shall be used.
5. All empty innerduct will be populated with a measured pull tape.
6. Where more than one innerduct is routed in a conduit, each innerduct shall consist of a different color from end to end (ex. Orange, Blue, Black, and White). Do not couple innerduct of different colors without HCCS approval.
7. All interior innerduct shall be plenum rated, unless installed in conduit.

2.9 CONDUIT PULL LINE

A. Description

1. Minimum pulling tension greater than 200 lb (900 N).
2. Ready-to-use cable pull line,
3. Use directly from the container.
4. Resists tangling when dispensing.
5. Rot and mildew resistant.
6. Handy reusable plastic dispenser pail with handle keeps the line dry.
7. Greenlee 430 or approved equivalent.

PART 3 - EXECUTION

3.1 EXAMINATION

A. Refer to General Conditions regarding verification of existing conditions before starting work.

B. Verify routing and termination locations of duct bank prior to excavation for rough-in.

C. Verify locations of utility holes prior to excavating for installation.

3.2 PREPARATION

A. Verify materials are on site in proper condition and of sufficient quantity.

B. Minimum electrical/communications underground cable separation:

1. 12 inches

C. Before encasement, verify ducts are free of debris and properly installed in support and spacer system, are properly fitted together and hold-down hardware is properly installed.

3.3 INSTALLATION

A. Install all work following drawings, manufacturer's instructions and approved submittal data.

B. Install watertight penetrations through foundation, HH and MH walls. Wherever a hand hole is used to simply pass through, the conduit entrances and exits will be situated at opposite ends of the hand hole instead of 90 degree angles.

C. Provide reinforcement at the point where ductbanks enter manhole or building walls as required to sustain shear forces that may be exerted on the ductbank by soil settlement or heaving.

D. Reinforcement may consist of PVC-coated or tape-wrapped galvanized rigid steel (GRS) or heavy-wall fiberglass-reinforced (FRE) conduits 10 feet out from the inside face of the manhole, tunnel, or building wall.

E. Specify end bells manufactured of GRS or heavy-wall fiberglass at the points of penetration/termination.

F. Assemble duct banks with non-magnetic saddles, spacers and separators. Position separators for 2-inch minimum concrete separation between outer surfaces of adjacent ducts.

1. Make uniform required bends with a minimum of a 24 inch radius for conduits less than 3 inch diameter, and a 48 inch radius for conduits 3 inches and larger.
2. Maintain vertical or horizontal separations of 12 inches of well-packed topsoil from any electrical service conduit run parallel to Communications conduits.

G. Extend below grade conduits to 4 inches above the finished floor inside a building.

H. Duct shall be encased in concrete (3500 PSI @ 28 days) unless noted otherwise.

I. Install conduit and duct with minimum slope of 4 inches per 100 feet (0.33 percent). Slope conduit and duct toward manholes and away from building entrances.

J. Cut conduit and duct square using saw or pipe cutter; de-burr cut ends.

K. Insert conduit and duct to shoulder of fittings; fasten securely.

L. Join nonmetallic conduit and duct using adhesive as recommended by manufacturer.

M. Wipe nonmetallic conduit and duct dry and clean before joining. Apply full even coat of adhesive to entire area inserted in fitting. Allow joint to cure for 20 minutes, minimum.

N. Install no more than equivalent of three 90-degree bends between pull points for electrical conduits and two (2) 90-degree bends for communications conduits.

O. Install fittings to accommodate expansion and deflection.

P. Terminate conduit and duct at manhole entries using end bell.

Q. Stagger conduit and duct joints vertically in concrete encasement six (6) inches minimum.

R. Use suitable separators and chairs installed not greater than 4 feet on centers. Secure separators and chairs to trench bottom prior to concrete pour.

S. Band conduits and ducts together before backfilling or placing concrete.

T. Securely anchor conduit and duct to prevent movement during concrete placement.

U. Place concrete in accordance with Section 03 3000.

V. Install ducts with minimum 3 inch concrete cover at bottom, top, and sides.

W. Reinforcing steel:

X. Reinforcing steel shall have a minimum yield strength of 60,000 psi for No. 4 bars and smaller, and 60,000 psi for No. 5 bars and larger.

Y. The reinforcing steel shall run parallel in the underground duct bank with one No. 4 (0.5 inch diameter) bar at each corner of the duct bank, lapped 24 diameters at splices.

Z. Install two No. 4 steel reinforcing bars in top of bank under paved areas.

AA. Connect to manhole wall using dowels.

BB. Provide suitable pull string in each empty duct except sleeves and nipples.

CC. Swab duct. Use suitable caps to protect installed duct against entrance of dirt and moisture.

DD. Backfill trenches in accordance with Division 31.

EE. Interface installation of underground duct markers with backfilling specified in Division 31.

3.4 PRE-CAST UTILITY HOLE

A. All pull boxes, hand-holes, man-holes, and utility holes shall be dedicated for either electrical or communications. Under no circumstances shall electrical cables and communication__ cables be installed in the same box.

B. Install and seal precast sections in accordance with ASTM C891.

C. Install utility holes plumb.

D. Size hand-hole in accordance with NEC unless noted otherwise on drawings.

E. Backfill utility hole excavation

END OF SECTION 270543

SECTION 270553
TESTING ADMINISTRATION, IDENTIFICATION

PART 1 - GENERAL

1.1 SECTION INCLUDES

A. This Section includes the following:

1. Testing requirements for the telecommunications structured cabling system, identification and administration.

1.2 RELATED SECTIONS

A. Related Sections:

1. Section 01
2. Section 263353: Telecommunications Uninterruptible Power Supply (UPS)
3. Section 270000: Communications
4. Section 270526: Telecommunication Grounding and Bonding
5. Section 270528: Interior Communications Pathways
6. Section 270543: Exterior Communication Pathways
7. Section 270553: Identification and Labeling of Communication Infrastructure
8. Section 271100: Communication Room Fittings
9. Section 271300: Backbone and Riser Media Infrastructure
10. Section 271500: Horizontal Media Infrastructure
11. Section 272100: Data Communication Network Equipment
12. Section 280500: Electronic Safety and Security
13. Section 281300: Access Control System (ACS)
14. Section 282300: Digital Video Surveillance System (DVSS)

1.3 REFERENCES

Section 270000 in its entirety shall be included as part of this specification.

1.4 QUALITY ASSURANCE

A. Procedures: Provide the following, prior to beginning Work.

1. Written, detailed procedures including techniques for securing, protecting, and dressing transitions from OF and unshielded twisted pair (UTP) cable to conductor to connector.
2. Written, detailed termination procedures for OF and UTP conductors.

PART 2 - PRODUCTS

2.1 NOT USED

PART 3 - EXECUTION

3.1 TESTING PREPARATION

A. Furnish proposed test procedures, recording forms, list of personnel and test equipment for Architect review.

B. Follow recommended procedures for testing as published by test equipment manufacturer.

3.2 TESTING COPPER AND FIBER OPTICS

A. Manufacturer's Testing

1. Copper Cable testing
   a. All copper testing shall be based on a channel performance test.
   b. Testing of all copper wiring shall be performed prior to system cutover. 100 percent of the horizontal and riser wiring pairs shall be tested for opens, shorts, polarity reversals, transposition and presence of AC voltage. Voice and data horizontal wiring pairs shall be tested from the telecommunications outlet to the TC. The Category 3 riser cable runs shall be tested for conformance to the specifications of TIA 568B Category.
   c. All voice and data Category 6 test results are to be documented on a HITS approved testing sheet, along with Category 6 tester generated test results sheets. All testing must include confirmation of continuity and proper pair terminations and that pairs are free of shorts, crosses, opens and polarity reversals.
   d. The Category 6 cable runs shall be tested for conformance to the specifications of TIA 568B Category 6. Testing shall be done with a TIA TSB-67 UL Certified Level 2 test set at a minimum. Near end crosstalk measurements shall be done at both the information outlet and the cross connect. Both ends shall pass TSB-67 requirements. Any pairs not meeting the requirements of the standard shall be brought into compliance by the contractor at no charge to the City. Complete end to end test results must be submitted to the City.
   e. Line Mapping (End-to-End Connectivity). Check 4-pair wiring for proper wiring configuration, open conductors, shorted conductors, crossed pairs, and reversed pairs.

f. Loop Resistance (DC-Steady State). Connect OHM meter across one end of cable pair with shoring terminator across the other end of cable pair.
   a) Measure steady-state DC resistance and compare to cable manufacturer's standard values.
   b) Values greater than allowed resistance are considered to have failed, and values smaller than allowed resistance are considered to have passed.
   c) Attenuation: Transmit several signals at increasing frequencies across each conductor.
   d) Measure signal loss in units of decibels (dB).
   e) Test frequencies and permitted dB loss values at each test frequencies.
   f) Loss values are specified in TIA 568B for Category 6, UTP cable (pending).

g. Cable Length: Record cable length from either length markings on cable jacket, or from hand-held multi-function test equipment incorporating time-domain reflectometer (TDR) circuitry.

h. Capacitance: Test each twisted pair with capacitance meter.
   a) Test opposite end of twisted pair for open circuit.
   b) Pass test results must yield capacitance within 2 percent of cable manufacturer's specification.

i. Near-End Crosstalk (NEXT): Measure both outlet and distribution end of link.
   a) Worst pair of cable with near-end crosstalk must be measured in dB.
   b) Test frequencies and permitted worst pair dB crosstalk values at each test frequencies are specified in TIA 568B for Category X, UTP cable (pending).
   c) Repair or replace, and retest failed cables until passing results are achieved.
   d) At a minimum, an Owner inspector or their designated representative shall randomly perform unannounced, on-site reviews during the installation. In addition, this person shall perform a final inspection and a complete review of the test results before the installation is accepted.

2. Optical Fiber Cable Testing w/ OTDR

   a) The Contractor shall test all lightguide cable prior to the installation of the cable. The Contractor shall assume all liability for the replacement of the cable should it be found defective at a later date.

   b) All fiber testing shall be performed on all fibers in the completed end to end system. Testing shall consist of a bidirectional end to end OTDR trace performed per TIA 455-61. The system loss measurements shall be provided at 850 and 1310 nanometers for multimode fibers and 1310 and 1550 for single mode fibers.

   c) Optical Loss Test Set (OLTS) testing shall be conducted for all installed multimode fibers to measure end-to-end attenuation, and installed length. Testing for multimode fiber shall be conducted bi-directionally at 850 nm and 1300 nm. Certified test records of all OLTS test results shall be provided as documentation and will become part of the "as-built" record.

   d) Fiber links shall have a maximum loss of: (allowable cable loss per km)(km of fiber in link) + (.4dB)(number of mated connectors) = maximum allowable loss

   e) Loss numbers for the installed link shall be calculated by taking the sum of the bidirectional measurements and dividing that sum by two.

f) Any link not meeting the requirements of the standard shall be brought into compliance by the contractor, at no charge to the City.

g) Documentation shall be provided in both hard copy and Compact Disk (CD) to the point of contact.

3. Optical Fiber Cable Testing w/ Power Meter

a) Multimode Horizontal Link Segments should be tested in one direction at the 850-nm or 1300-nm wavelength.

b) Multimode Backbone and Composite Link Segments should be tested in one direction at both 850-nm and 1300-nm wavelengths.

c) Singlemode Horizontal Link Segments should be tested in one direction at the 1310-nm or 1550-nm wavelength.

d) Singlemode Backbone and Composite Link Segments should be tested in one direction at both 1310-nm and 1550-nm wavelengths.

e) Note: The minor attenuation differences due to test direction are on par with the accuracy and repeatability of the test method. Therefore, testing in only one direction is warranted. Horizontal Link Segments are limited to 90 meters. Therefore, attenuation differences caused by wavelength are insignificant, and as a result, single wavelength testing is sufficient.

4. In compliance with TIA-526-14A "Optical Power Loss Measurements of Installed Multimode Fiber Cable Plant" and TIA-526-7 "Measurement of Optical Power Loss of Installed Single-Mode Fiber Cable Plant", the following information should be recorded during the test procedure:

a) Names of personnel conducting the test.

b) Type of test equipment used (manufacturer, model, serial number).

c) Date test is being performed.

d) Optical source wavelength, spectral width, and for multimode, the coupled power ratio (CPR).

e) Fiber identification.

f) End point locations.

g) Test direction.

h) Reference power measurement (when not using a power meter with a Relative Power Measurement Mode).

i) Measured attenuation of the link segment.

j) Acceptable link attenuation.

k) Note: Horizontal Link Segments are limited to 90 meters, therefore, the acceptable link attenuation can be based on the longest installed link without introducing a significant error.

5. Acceptable Attenuation Values

a) The general attenuation equation for any link segment is as follows:

b) Acceptable Link Attn. = Cable Attn. + Connection Attn. + Splice Attn. + CPR Adj.

c) Note: A connection is defined as the joint made by mating two fibers terminated with remateable connectors (e.g. ST, SC, SFF).

d) 62.5 µm Multimode Attenuation Coefficients

Cable Attn. = Cable Length (km) × (3.40 dB/km@850nm or 1.00 dB/km@1300nm)
Connection Attn. (ST or SC connectors) = (Mated Connections × 0.4 dB)
Connection Attn. (SFF connectors) = (Mated Connections × 0.14 dB)
Splice Attn. (CSL or Fusion) = Splices × 0.30 dB

e) CPR Adj. = See table below

MULTIMODE LIGHT SOURCE CPR ADJUSTMENT					
	CAT-1	CAT-2	CAT-3	CAT-4	CAT-5
LINKS WITH ST OR SC CONNECTIONS	+ 0.50	0.00	– 0.25	– 0.50	– 0.75
LINKS WITH LC CONNECTIONS	+ 0.25	0.00	– 0.10	– 0.20	– 0.30

f) Coupled Power Ratio Measurement.

Note: The Coupled Power Ratio of a light source is a measure of the modal power distribution launched into a multimode fiber. A light source that launches a higher percentage of its power into the higher order modes of a multimode fiber produces a more over-filled condition and is classified as a lower category than a light source that launches more of its power into just the lower order modes producing an under-filled condition. Under-filled conditions result in lower link attenuation, while over-filled conditions produce higher attenuation. Therefore, adjusting the acceptable link attenuation equation to compensate for a light source's launch characteristics increases the accuracy of the test procedure.

6. Procedure:

a) CPR Test Jumper-1 shall be multimode, 1 - 5 meters long with connectors compatible with the light source and power meter and have the same fiber construction as the link segment being tested.

b) CPR Test Jumper-2 shall be singlemode, 1 - 5 meters long with connectors compatible with the light source and power meter.

c) Clean the test jumper connectors and the test coupling per manufacturer's instructions.

d) Follow the test equipment manufacturer's initial adjustment instructions.

e) Connect multimode test jumper-1 between the light source and the power meter. Avoid placing bends in the jumper that are less than 100 mm (4 inches) in diameter. See Figure 1.

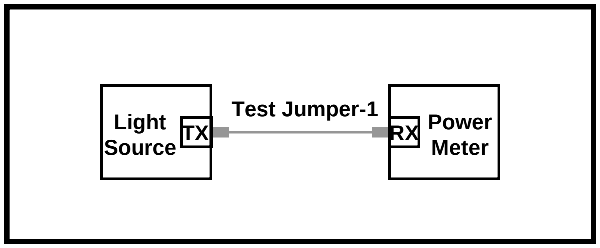

Figure 1

f) If the power meter has a Relative Power Measurement Mode, select it. If it does not, record the Reference Power Measurement (Pref). Note: If the meter can display power levels in dBm, select this unit of measurement to simplify subsequent calculations.

g) Disconnect test jumper-1 from the power meter. Do NOT disconnect the test jumper from the light source.

h) Connect jumper-2 between the power meter and test jumper-1 using the test coupling. The singlemode jumper should include a high order mode filter. This can be accomplished by wrapping the jumper three times around a 30 mm (1.2 inches) diameter mandrel. See Figure 2.

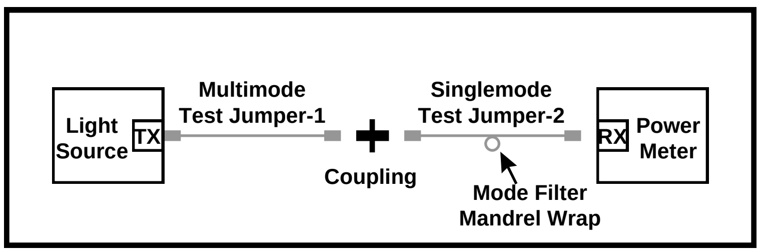

Figure 2

i) Record the Power Measurement (Psum). If the power meter is in Relative Power Measurement Mode, the meter reading represents the CPR value. If the meter does not have a Relative Power Measurement Mode, perform the following calculation:
If Psum and Pref are in the same logarithmic units (dBm, dBu, etc):
CPR (dB) = | Psum – Pref |
If Psum and Pref are in watts:
CPR (dB) = | 10 × log10 [Psum/Pref] |

3.3 IDENTIFICATION

A. Labeling

1. Label all cable, fiber strands, patch panels, patch panel termination positions, distribution frames, jacks, and cover plates.

2. Wire and fiber labels shall be clear vinyl with acrylic adhesive tape. Text shall be typed with minimum 8 point font.
3. Distribution cabinet labels shall follow Section 16195 - Electrical Identification.
4. All other labels shall be white polyester with acrylic adhesive tape. Text shall be typed with minimum 10 point font.
5. Label shall be attached to each copper cable at each end.
6. Label all conduit stubs.
7. Label all conduits and innerducts passing through IDF Rooms.
8. Provide front adhesive label for individual patch panel positions. Label patch panels consecutively from bottom to top. Label shall be typed with minimum font size of 8 point.
9. Label shall be attached to fiber cable at each end and to each individual fiber at each end prior to termination.
10. Cable labels shall be placed in the following locations: on jack face plates, on cable inside back boxes, junction boxes, access points, and manholes/handholds, on cable above the terminations in the IDF and MDF, on patch panels, and every 50 feet when not in conduit. Conduits shall be labeled “communications” every 50 feet and at the origination and destination.

B. Nameplates

1. Nameplates: Provide engraved three-layer laminated plastic nameplates with white letters on a black background.
2. Provide nameplates for the following:
   a) Equipment Racks and cabinets.
   b) Telephone Backboards.
   c) Telecommunication Grounding Busbars.

C. Labeling Schema

1. Submit labeling plan for approval prior to installation.
2. Reference “T” Series drawings for labeling schema example.

D. Color Codes

1. Voice Outlets: Color shall match cover plate color.
2. Data Outlets: Provide red for Cat 5E, provide green jack for CAT 6.
3. Blanks: Color shall match cover plate color.

E. Cable Jacket Colors

1. Voice cables: Provide white jacket.
2. Data cables: Provide blue jacket.
3. Singlemode fiber optic cable: Provide yellow jacket.
4. Multimode fiber optic cable: Provide orange jacket.

F. Copper Cable 110 Wiring Blocks: Floor-standing frames and wall or cabinet-mounted 110 wiring blocks, 100- or 300- pair.

1. Wire punched down on 110 wiring block shall be labeled on 110 wiring blocks as individual pairs.
2. Label 110 wiring block pair count using Excel spreadsheet template, along with color transparent plastic strip (EFM) for color-coding.
3. Voice and data 110 wiring block labels will be distinguished by the following acronyms:

Data Frame Example:	Voice Frame Example:
DT = Data Campus Cable	VT = Voice Campus Cable
DM = Data Backbone Cable	VM = Voice Backbone Cable
DL= Data Network Cable	VP = Voice ISDN Power Cable
DU = Data Horizontal Cable	VU = Voice Horizontal Cable

4. Skip 25th position on each strip of 110 wiring block when wiring 4-pair cable.
5. Provide floor-standing frame labels assuming twelve 300-pair 110 wiring blocks. Group of blocks are to be designated as backbone cables, power cables, network cables, and horizontal voice or data cables.
6. Install nameplate on each floor-standing frame.
7. Label network equipment 110 wiring blocks with equipment number, slot, and port number.
8. Insert EFM color-coded plastic slides over 110 block labels.

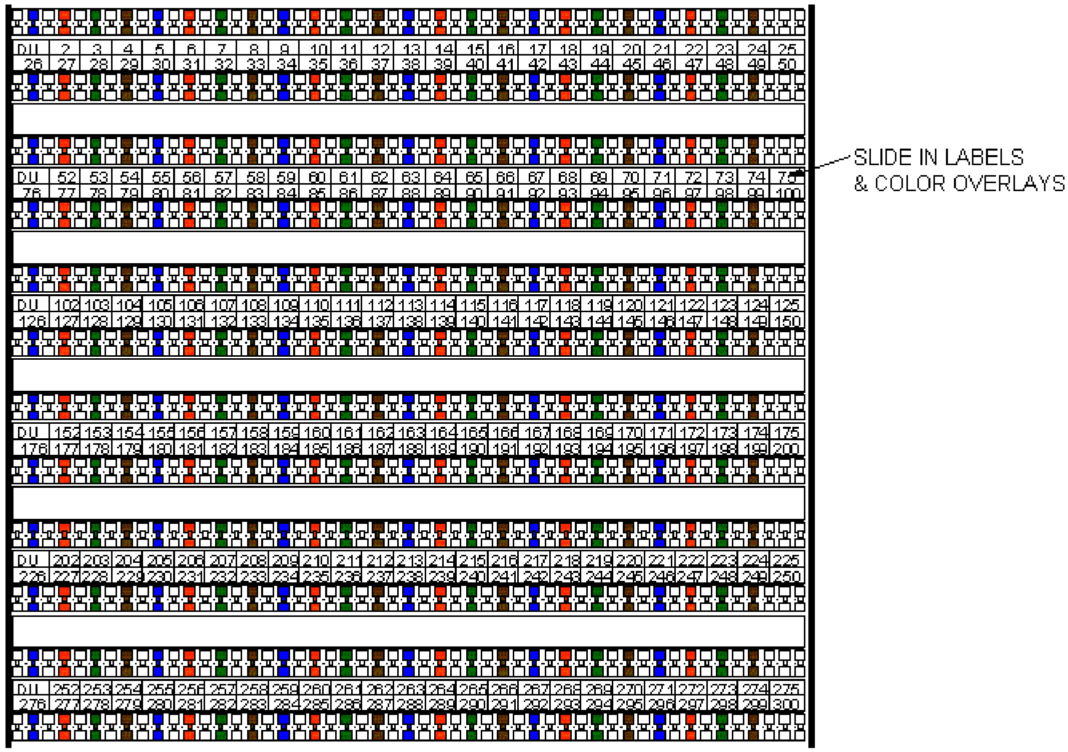

G. Lightguide Interconnection Unit (LIU)

1. Attach engraved label to door of LIU. LIU label shall have building number, IDF number, and numeric sequence.
2. List cable(s) and room number on LIU along with LIU name.
3. Provide continuous numbering sequence for individual fibers. Number individual fiber strands in LIU from 1 through 24, for cables with 24 fiber strands or less.
4. Use multiple LIUs for cables with greater than 24 fiber strands, and label sequentially according to number of fiber strands.

H. Telecommunication Cabinet: Floor-standing cabinet and wall-mounted cabinet.

1. Floor-standing cabinet label shall have building number, color designation for classification of network, IDF number, and sequential character.
2. Center label at top of front door of cabinet.

I. Lightguide Termination Shelf

1. Label cable designation(s) on outside door of termination shelf.

2. Single shelf may hold more than one campus, backbone or horizontal cable. Do not split a single cable between shelves. Start numbering sequence from 1 within the shelf, and continue to last fiber strand within that cable, for cable larger than 4 fibers.
3. Label each individual coupler on coupler plate with appropriate sequential number for terminating shelves.
4. Each shelf shall contain either single-mode or multi-mode, not both.
5. Install multiple shelves for cables greater than 72 optical fibers. Label sequentially according to number of optical fibers.
6. Label 4-fiber user cables according to number of couplers in the shelf.

J. Optical Data Telecommunication Outlet:

1. Follow Section 3.3D for labeling scheme.
2. Attach label to outlet cover for appropriate outlet.

K. Telecommunication Outlet: Voice/Data

1. Follow Section 3.3D for labeling scheme.
2. Attach label with preassigned numeric value to outlet cover for appropriate outlet.

L. Backbone Conduit Pullbox: Install engraved plastic label to cover of pullbox.

M. Conduit: Label conduits with appropriate color-coded tape.

1. Install tie wrap label tag on each conduit end point that terminates in IDF, MDF, or stubbed through floor, ceiling or wall without pullbox.
2. Hand-letter with permanent black ink, in block type letters with clear, legible letters.
3. Match label information to information in nearest J-Box label that conduit leads to.

3.4 ADMINISTRATION

A. Upon completion of the installation, Contractor will prepare as built documentation of the entire SCS. This documentation should include:

1. Drawings

a) All drawings shall be provided on disk in a form compatible with AutoCAD 2010. A complete set of project plans will be provided to the Contractor on disk. The Contractor will modify the drawings by placing the cable information on a separate layer. All of the requested drawings will be placed on these plans so that all cable routes are to scale and provide accurate information for use in the future when changes are made and the exact location of cables are required to avoid service interruptions.

b) A complete diagram of all terminations in the Telecommunication Rooms and Closets

c) A complete diagram of all copper, fiber, and coax riser cable.

d) A complete diagram of all copper, fiber, and coax inter-building cable.

e) Floor plans showing exact cable routings with each outlet clearly marked with cable number.

f) A complete diagram of all cable tray, conduits and conduit sleeves.

2. Documentation

a) All cable inventory data documentation will be submitted in designated Microsoft Excel 2010format.

b) Documentation on horizontal cable will include cable number and length of cable.

c) Documentation on riser cable and interbuilding cable will include cable number, source and destination, type of cable, length of cable and number of pairs or fibers.

d) Complete cross connect documentation is required. This information will include detailed documentation of all four pairs of each horizontal cable and every pair of all copper riser and inter-building cable and every fiber of fiber optic cable.

3. Final Reports - Category 6 UTP Cables and Optical Fiber: Final reports which confirm that cabling has been tested per shall be delivered within two weeks after completion of installation.

a) Submit one hard copy and one diskette copy of final reports to A/E and provide one hard copy of cabling charts only in each IDF/MDF.

b) Each report shall include the following:

c) Completed outlet test forms bound in 3-ring notebook by order of room number for each IDF divided by Tenant.

d) Copies of UTP and optical test equipment calibration/certification certificates.

e) Copies of training certificates for test personnel.

f) Written statement ensuring UTP and optical fiber performance of the entire installation for minimum period of 20 years from the day of acceptance.

END OF SECTION 270553

SECTION 271100
COMMUNICATIONS CABINETS AND EQUIPMENT ROOMS

PART 1 - GENERAL

1.1 PROJECT SCOPE SUMMARY

A. Subject to the General and Special Conditions, this section shall specify Communications Cabinets and Equipment Rooms

B. Section Includes:

1. Requirements for new Communication Equipment Rooms and IDF Enclosures
2. Materials and installation of telecommunications equipment in Intermediate Distribution Rooms (IDF's).
3. Install equipment as described in Statement of Work in its entirety.
4. Drawings shall delineate locations and types of equipment in IDF's including rack frame and cabinet locations.
5. Raceway and cabling routing shown on Drawings are not intended to show all support or mounting hardware, or raceway bends, kicks, offsets, and couplings.

1.2 DESCRIPTION

A. This Section specifies the requirements for the Communications Equipment Room Fittings for FBC.

1. The new communications service entrance facility will be located in the first floor MDFs in the buildings. IDFs will be located on the first floor, ground floors of each building. Refer to the Telecom riser diagram for details. The minimum number of 4-inch sleeves that must be used is based on the total feet that the sleeves support.
   a) Up to 25,000 square feet = two 4-inch sleeves
   b) 25,000 square feet to 50,000 square feet = three 4-inch sleeves
   c) 50,000 to 100,000 square feet = four 4-inch sleeves
   d) 100,000 to 300,000 square feet = five to eight 4-inch sleeves

2. Space for new outside plant copper and fiber cable and terminating hardware will be provided in the MDF. The new MDF and IDFs will be located on each floor in the three new buildings as indicated on the T drawings.

3. Minimum size MDF based on the size of the area it's serving.
   a) Minimum = 16'x 10'
   b) Reference drawings for dimensions.

4. Minimum size IDF based on the size of the area it's serving.
   a) 5000 square feet or less = 10'x 8'
   b) 5000-8000 square feet = 10'x 10'

c) 8000-10000 square feet = 10'x 12'
d) Reference drawings for dimensions.

5. Environmental
a) 24/7 environmental controls - 18 °C to 24 °C (64 °F to 75 °F). The humidity range shall be 30% to 55% relative humidity.
b) Ceiling height a minimum of 9 ft. above finished floor (AFF).
c) No false ceilings.
d) Lighting in MDF / IDF, must have a uniform intensity of 70 Foot Candles when measured 30 inches from the finished floor on all sides of equipment racks
e) All light fixtures must be mounted a minimum of 8 feet, 6 inches above the finished floor.
f) Dedicated Telecom Room power panels fed from UPS distribution, if available.
g) Minimum electrical in IDF:
1) A minimum of two dedicated 120Vor 208V AC electrical outlets on separate 20 or 30-ampere rated branch circuits per rack installed.
2) Each circuit should have appropriate twist lock receptable (L5-20, L5-30, L6-20, L6-30)
3) Separate duplex 120V AC convenience outlets with NEMA 5-20R (for tools, test sets, vacuums, etc.) installed at least 18 inches above the finished floor at 6-foot intervals around perimeter walls.
4)
h) ¾ "void-free" exterior grade AC plywood on each wall, 8 ft high, painted on all sides with at least two coats of light gray fire-retardant paint.
i) Fire suppression systems.
j) A floor rating greater than 4.8 kPa (100 lbf/ft2) distributed loading.
k) A floor rating greater than 8.8 kilonewton (kN) (2000 lbf) concentrated loading.
l) Fully-opening, secured, lockable doors that are at least 4 ft wide and 6.7 ft [80 in]) tall.
m) A Telecommunications Main Grounding Bus Bar (TMGB) in the MDF and Telecommunications Grounding Bus Bar (TGB) in the IDF and a Bonding Conductor for Telecommunications (BCT) that bonds the TMGB to the electrical power ground compliant with ANSI J STD-607 A Standards.
n) Equipment racks and overhead basket tray system as indicated on the T Drawings.

1.3 REFERENCES

Section 270000 in its entirety shall be included as part of this specification.

A. Related Sections:
1. Section 01
2. Section 270000: Communications
3. Section 270526: Telecommunication Grounding and Bonding
4. Section 270528: Interior Communications Pathways
5. Section 270543: Exterior Communication Pathways

6. Section 270553: Testing Administration Identification
7. Section 271100: Communication Room Fittings
8. Section 271300: Backbone and Riser Media Infrastructure
9. Section 271500: Horizontal Media Infrastructure
10. Section 272100: Data Communication Network Equipment
11. Section 274100: Audio Video System
12. Section 280500: Electronic Safety and Security
13. Section 281300: Access Control System (ACS)
14. Section 282300: Digital Video Surveillance System (DVSS)

1.4 COORDINATION

A. Refer to General or Special Conditions.

B. Refer to Division 26, Electrical Work

1.5 QUALITY ASSURANCE

A. Assure that the "as installed" system is correct and complete per construction documents: including engineering drawings, manuals, and operational procedures in such a manner as to support maintenance and future expansion of the system.

B. Owner/Architect/Engineer retains the right to access and inspect all work during the entire duration of the project and any items that do not adhere to the standards, reference, contract, bid, or project documents will be corrected immediately at the expense of the contractor.

C. UL Compliance: Provide products that are UL-classified and labeled.

D. Follow Section 17080 and the following:

E. Material and installation shall meet requirements of NFPA 70.

F. Material, when applicable, shall be approved by a Nationally Recognized Testing Laboratory (NRTL).

G. Monitor and maintain quality control over manufacturers, suppliers, subcontractors, work force, site conditions, products, and services to ensure Work is of specified quality.

H. Workmanship: Install material and equipment in neat and workmanlike manner, in accordance with NEC Section 800-6. Specified requirements represent minimum acceptable quality for Work. Comply with industry standards except when more stringent requirements are specified herein, and tolerances indicate higher standards or more precise workmanship.

I. All communications work shall be performed under the direct on-site supervision of a Building Industry Consulting Service International, Inc. (BICSI) Certified Registered Communications Distribution Designer (RCDD). Submit resumes and RCDD registration to the Architect as proof. Paperwork must be approved by the Architect in writing prior to construction. The RCDD must be at the job site during construction. The RCDD shall be present during all cable testing, pulling and termination procedures.

J. Provide all materials, equipment, and installation in compliance with the latest applicable standards from ANSI, FCC, ASTM, EIA/TIA, IEEE, NEC, NFPA, NEMA, REA, and UL.

K. Installer Qualifications:

1. Knowledge of BICSI installation standards.
2. Knowledge of NEC standards.
3. Knowledge of EIA/TIA standards.
4. Five (5) years experience in the installation of fiber optic cables, including splicing, terminating and testing. Testing on fiber optic cable shall include single and multimode.
5. Three (3) years experience in the installation of Category 3 and Category 5 Unshielded Twisted Pair copper cables for voice and data distribution systems, including splicing, terminating and testing. Testing on Category 3 and Category 5 copper cable shall include complete verification with EIA/TIA cable standards.
6. Ten (10) references for project of equivalent scope, type and complexity of work completed within the last five (5) years. The Contractor shall submit as proof, supporting documents and the names, addresses and telephone numbers of the operating personnel who can be contacted regarding the installation system.
7. Must be a certified installer of the termination equipment manufacturer.

L. Install products only by qualified technicians certified by manufacturers.

M. Provide all electronic equipment with the UL label when applicable.

N. Comply in every way with the requirements of local laws and ordinances, the National Board of Fire Underwriters, and the National Electrical Code. Anything in the plans or specifications that does not strictly comply with the above laws, ordinances, and rules must be referred to the attention of the Engineer for a decision before proceeding. No change in the plans or specifications shall be made without full consent in writing of the Engineer.

1.6 DELIVERY, STORAGE, AND HANDLING

A. Provide equipment necessary to handle, transport, and deliver materials, including EFM, from storage site to work area.

B. Store components in original wrappings, and protect from dirt, weather and construction work traffic.

C. Thoroughly inspect materials for damage before taking custody.

1.7 WARRANTY

A. If items supplied as part of Project have warranties longer than one year from date of final acceptance, Contractor shall supply longer warranty.

PART 2 - PRODUCTS

2.1 RELAY RACKS

A. Approved Manufacturers:

1. Chatsworth

B. Performance:

1. Constructed of painted aluminum
2. 84" in height
3. Black finish
4. Supplied with #6 AWG ground lug kit
5. Supplied with spare screws (minimum 50)
6. Mounting holes shall be drilled and tapped each side at 5/8"-5/8"-1/2" patterns compatible with EIA 1-1/4"-5/8" alternating patterns.
7. Include base flanges with mounting holes securing the rack to the floor. Each mounting hole must be at least 5/8" in diameter.

C. Where the rack is to be mounted to VCT flooring or bare concrete, an insulating pad must be used, and care must be taken that anchors, used to secure the rack to the floor, do not come in contact with any reinforcing steel embedded in the concrete slab.

D. Requirements

1. For 2 post racks – a minimum of 6-inch wide vertical wire management will be used.
2. For 4 post racks – a minimum of 8-inch wide vertical wire management will be used.
3. For 2 and 4 post racks, 4U horizontal wire management will be used unless otherwise specified.
4. For wall mount racks – 2U horizontal wire management will be used unless otherwise specified.

E. PDU Power Strips:

1. Include with each Relay Rack
   a) Horizontal PDU: QTY (2) CPI EA-6275-CE, basic PDU, Nema L5-30P input, (12) Nema 5-20R outlets.
      1) Include Redundancy Pack which includes 2 PDUs in Black and Glacier White for easy identification of the primary and secondary unit.

2.2 CABLE MANAGEMENT

A. Approved Manufacturers:

1. Chatsworth CPI
2. Panduit

B. Vertical Cable Management:

1. Double-sided cable routing
2. 6" or wider depending upon application requirements
3. Lockable latching sections with protective edge guards

4. Space slots at 1 RU intervals
5. Black finish
6. Horizontal management shall be 2X number of 48 port Cat6 flat patch panels 568B
7. All UTP data cables must be terminated on 24 or 48 fixed-port high-density Cat 5e patch panels (no 96 port) which are to mount on wall racks, in a free-standing equipment rack, or an enclosed data cabinet.

C. Horizontal Cable Management:

1. Capable of attachment to a 19" rack
2. 2 U, maximum 4" deep
3. Heavy-duty aluminum rings with rounded edges
4. Incorporate cable routing guides and supports on rear panel
5. Black finish

2.3 CABLE TRAY

1. Use in Data Center, MDF and IDF
2. Specifications
   a) UL Classified for suitability (as an equipment grounding conductor only)
   b) Minimum 16" wide; 4" height
   c) Support at 5' intervals
   d) Install at 8' AFF
   e) Secure to equipment racks and ceiling with approved hardware
   f) 10-foot sections
   g) Include all accessories for transitions and cable dropouts for every cabinet and rack, 2 per cabinet/rack.
   h) Painted black powder coat
   i) Bond to TMGB/TGB as required with a #6 AWG bonding conductor
3. Products
   a) Globaltrac Wire Mesh Cable Tray
   b) Chatworth 84821-716 or approved equal
   c) Include required accessories for a complete cable runway inside Datacenter, MDF and IDF

2.4 FIBER RUNNER

A. Specifications:

1. The 4x4 routing system shall be a system of channel, fittings, and brackets designed to segregate, route, and protect fiber optic and high performance copper cabling.
2. Channel and fittings shall be assembled using pre-assembled couplers.
3. A selection of spillout options shall be available that easily attach using the vertical tee.
4. Fittings maintain a minimum 2" bend radius to protect against signal loss due to excessive cable bends.

5. Available system colors shall be yellow and black. A full complement of brackets shall be available for attaching system components to ladder rack, threaded rod, auxiliary framing, strut, equipment racks, cabinets, and raised floor pedestals.

B. Approved Manufacturers:

1. Panduit Fiber Runner 4x4 Routing System
2. Comscope FiberGuide

2.5 TELEPHONE BACKBOARDS

A. All telephone backboards shall be minimum 8’ x 4’ x ¾” fire treated plywood unless noted otherwise.

B. Paint all backboards with a minimum of 2 coats of fire-retardant paint on all sides and edges.

C. For all new IDF or MDF Rooms, provide all walls with 8’ high x ¾” plywood backboard covering full length or as noted on the contract documents.

D. Paint plywood backboard white.

2.6 FREESTANDING VERTICAL EQUIPMENT CABINETS

A. Manufacturer: Chatsworth ZetaFrame cabinets or submitted and owner-approved equivalent.

B. General

1. The work covered here consists of the furnishing of all necessary labor, supervision, materials, accessories, parts, equipment, and services to provide and install a complete freestanding equipment cabinet.
2. The standard freestanding equipment cabinets are defined to include, but not limited to, cabinet frames, cabinet front and rear doors, top and side panels.
3. All internal cabinetry hardware shall be 19-inch rack mountable.
4. Provide and install freestanding vertical cabinets, with hinge placement as indicated in the Drawings.
5. Provide vertical and horizontal wire management for all cabinets

C. PDU Power Strips:

1. Include with each Data Center Server Cabinets
   a) Vertical PDU: QTY (2) CPI EA-6026-CE, switched pro eConnect vertical PDU, L21-30P input, (18) C13 + (6) C19 + (3) 5-20 outlets, 8.6KW.
      1) Include Redundancy Pack includes which 2 PDUs in Black and Glacier White for easy identification of the primary and secondary unit.
   b) Horizontal PDU: QTY (2) CPI 12816-706, basic PDU, Nema 5-20P input, (8) Nema 5-20R outlets.

D. Data Center Server Cabinet:

1. Cabinets shall be fully assembled by the manufacturer with the components listed below.
    a) Chatsworth 45RU; 800mm W; 1200mm D; Zetaframe
        1) Doors: single perforated front/double perforated rear
        2) Top Panel: brush sealed
        3) Side Panel: (2) 2-piece side panels
        4) Bottom Panel: solid
        5) Thermal Management:
            a) air dam kit
            b) cabinet to floor seals kit
        6) Color: black
        7) Shipping: standard pallet, fully assembled at factory
        8) Snap-In Filler Pannels: include fully populated with cabinet
        9) Cable Management:
            a) (4) Short finger vertical cable manager with hinged cover
            b) (2) 4.5" wide cable lashing panel
        10) Power Management: (2) full height PDU brackets
        11) Installation products:
            a) leveling feet adjustment tool
            b) click-nut hardware kit, cage nuts, M6 screws, 25 pack, zinc.
        12) Air Detector Installed
    b) RFID Electronic Lock Kit:
        1) Factory installed on front door of each cabinet.
        2) Integration with existing access control system to use same access cards.
        3) 3 door sensors, 2 wiring harnesses, 2 mechanical override keys
        4) CPI 14668-001
    c) PDU Power Strips:
    d) Vertical PDU: QTY (2) CPI EA-6026-CE, switched pro eConnect vertical PDU, L21-30P input, (18) C13 + (6) C19 + (3) 5-20 outlets, 8.6KW.
        1) Include Redundancy Pack includes which 2 PDUs in Black and Glacier White for easy identification of the primary and secondary unit.
    e) Horizontal PDU: QTY (2) CPI EA-6275-CE, basic PDU, Nema L5-30P input, (12) Nema 5-20R outlets.
        1) Include Redundancy Pack which includes 2 PDUs in Black and Glacier White for easy identification of the primary and secondary unit.
2. Copper Patch Panels: All Server cabinets to have (2) 24 patch panels installed. See Specification 271500
3. Grounding Bus Bar:
    a) Provide Rack-Mounted Ground Bar. See Specification 270526

E. Grounding

1. Provide grounding in accordance with the TIA/EIA-607 guidelines.
2. Provide a grounding busbar at each MDF and IDF Room. The busbar shall be a minimum 4"w x 24"L (MDF), 4"w x 12"L (IDF) x ¼" thick copper with stand-off insulators.

3. A telecommunications backbone bonding conductor (TBB) shall be routed from the Telephone main grounding busbar (TMGB) to the farthest IDF Room telecommunications grounding busbar (TGB). The bonding conductor shall be a minimum 2/0 AWG solid copper insulated conductor. The TBB shall be bonded at each end.
4. Each IDF Room TGB shall be bonded to the building steel or building ground with a #6 AWG conductor (larger conductor is over fifty feet).
5. All backbone cabling with metallic sheath shall be bonded at each sheath opening.
6. Grounding and bonding conductors shall be #6 AWG. They shall be routed with a minimum number of bends. The bends shall be sweeping.
7. Make all bonding connection with listed bolts, crimp jumper pressure connector, clamps, or lugs with a similar metal to prevent oxidation. Dissimilar metals may be used with matching gel. Exothermic welding may be used.
8. Ground and bond all equipment racks.
9. Ground cable tray with bonded jumper on both ends. Cable tray sections shall be bonded in accordance with manufacture's guidelines. Keep bonding jumper on one side of the tray throughout.

PART 3 - EXECUTION

3.1 GENERAL

A. Telecommunications rooms are generally considered a zone serving facility. These rooms may be equipped with fiber and copper cables, wall mounted termination blocks/patch panels, rack mounted copper and fiber patch panel terminations, vertical and horizontal cable management systems and equipment racks. Cable Contractor shall provide proper identifications/labeling scheme for all structured cabling components installed in these rooms.

B. Follow manufacturer's recommended installation and termination practices.

C. Cabling within racks and enclosures: provide adequate length of cabling. Train conductors to termination terminal points that follow manufacturer's installation procedures for maintaining cable performance specifications. Provide lacing/mounting bars to restrain cables, to prevent straining connections, and to stop bending cables to smaller radii than minimums recommended by manufacturer.

D. Equipment Racks: Provide 19" wide x 7'-0" tall racks with number of vertical rack sections as required to allow space for termination of all fiber and data/voice cabling plus mounting space for multi-port concentrators (Hub/Switches) required to cross-connect all data jacks.

E. Locate/space racks and enclosures (cabinet) according to EIA/TIA guidelines for front and around access.

F. Vertical wire management: double-sided vertical rack cabling sections shall be a minimum width of 6 inches or wider. Reference T. Drawings

G. Entrance: Arrange and coordinate locations of distribution frames, patch panels, cross-connections (furnished by others) in communication rooms and racks to optimize space requirements of any service provider requirements, telephone system and LAN equipment.

H. Provide cable runway in equipment room above all racks and up to cross-connects/runway/conduits/sleeve's entering room from corridors. Form a complete runway system by ringing the room and connecting all hardware installations. Route the cables within the room by taking the longest available path through the perimeter cable tray. Attach grounding lugs to each rack/cable raceway, conduit, etc. Refer to 'T' drawings for details.

I. The MDF contains cross-connect facilities for terminating cables and for connecting the horizontal and riser segments and telecommunications equipment. The MDF may also support other building information systems such as CATV, alarms, security, audio, and other telecommunications systems.

J. Coordinate runway locations with lighting, air-handling systems, and fire extinguishing systems so that fully loaded trays will not obstruct or impede their operation. In the United States, NEC Article 392 provides requirements for cable trays.

K. Provide horizontal cable runways. Equip each 19” rack with overhead ladder style cable runway installed between the wall and horizontal/equipment racks. Refer to COMMUNICATIONS “T” drawings for proposed locations and sizing of each runway.

L. Securely attach to wall studs with support brackets (and racks if applicable), in accordance with manufacturers written instructions.

M. Provide ground lug for each 19” rack. Racks shall be grounded to wall mounted ground bus bar using #6 AWG stranded, green jacketed, insulated copper conductor. Furnish all required bonding material and hardware, and bond to building grounding electrode subsystem TMGB in MDF. If crimp connectors are used to bond the #6 AWG wire, follow NEC bonding procedures/specifications.

N. An inert dielectric material shall separate dissimilar metals apt to corrode through electrolysis under the environmental operating conditions specified.

3.2 EXAMINATION

A. Verify conduit, raceways, boxes, fittings and bodies are properly installed as specified in Division 16.

B. Verify grounding and bonding following Section 270526 and this section.

C. Verify supporting devices are properly installed following Section 270526.

D. Verify conduit has a minimum 1-inch diameter for Category 6 home runs.

E. Verify 4 inch or 6 inch conduits are used for building entrance cables or cables going between closets or buildings.

F. Verify liquid-carrying pipes are not installed in or above voice and data system equipment rooms.

G. All electrical circuits used for the connection of technology equipment should be dedicated single fused 208/120 volt 20 or 30 amp circuit. These outlets should be served from dedicated panels within the nearest electrical room. All of these outlets should be on an emergency backup power system to provide continuous uninterrupted power to the equipment.

H. All 120-volt circuits should be clearly marked and dedicated for technology.

I. All telecommunications rooms, MDF's and IDF's should not be located adjacent to any space that contains sources of Electromagnetic Interference (EMI). Transformers shall not be placed in any telecommunications closet and should be located at least 4 feet away from any communication cable or termination equipment.

J. All protected telecommunication terminations require bonding, grounding and a Busbar.

K. Flooring in Telecommunication Rooms shall be anti-static vinyl tile with vinyl baseboard as specified in Division 09.

L. Telecommunication rooms will have open ceilings at a minimum height of 9' with all exposed concrete sealed to prevent dust.

3.3 PREPARATION

A. Heating, ventilation, and air conditioning sensors and control equipment must maintain the room temperature between 64° F and 75° F. Humidity must be 30% to 55%.

3.4 INSTALLATION

A. General

1. Install work following drawings, manufacturer's instructions and approved submittal data. The number of cables per run, outlet configuration and other pertinent data will be included on the drawings.
2. All installation shall be done in conformance with TIA/EIA 568B and BICSI standards. The Contractor shall ensure that the maximum pulling tensions of the specified distribution cables are not exceeded and cable bends maintain the proper radius during the placement of the facilities. Failure to follow the appropriate guidelines will require the Contractor to provide in a timely fashion the additional material and labor necessary to properly rectify the situation. This shall also apply to any and all damages sustained to the cables by the Contractor during the implementation.
3. The Structured Cabling System (SCS) installation should meet all applicable national and local codes pertaining to low voltage cable system installations.
4. The contractor will adhere to the installation schedule of the general contractor and should attend all construction meetings scheduled by the general contractor.
5. The contractor will be responsible for the cross connection of the horizontal cable runs to the backbone cable system. The connection to voice and data systems will be performed by the vendors installing and/or maintaining those systems.
6. All components of the cabling system shall be installed in a neat, workmanlike manner. Wiring color codes will be strictly observed and terminations shall be uniform throughout the installation. All cables shall be neatly dressed at the termination points. Final installation shall be subject to the Engineer's approval.

7. Any cable placed in space used as an air return or in any way connected with air-handling plenums or building ventilation shall be low-smoke, fire retarding cable, and must comply with the NEC 725, 760, and 800. No cabling shall be placed in plenums without written approval from the City Engineer.
8. All vertical cables shall be affixed to a permanent structure at each floor in accordance with industry standards to avoid cable pull back.
9. All conduit and cabinet entrances shall be sealed with an approved, re-enterable sealant material to prevent ingress of water, dust, or other foreign materials.
10. The Contractor shall conceal all horizontal distribution wiring within conduit provided in the walls. If it becomes necessary to use an alternative method, the Contractor shall obtain approval from the Owner prior to the use of the alternate method.
11. Install work following drawings, manufacturer's instructions, and approved submittal data.
12. The installation shall meet all applicable national and local codes pertaining to low voltage cable system installations.
13. The contractor will provide service loops (slack) for cables terminating in the main equipment room or the telecommunications closets. A 6- foot service loop will be provided above the access ceiling or cable trays unless specified otherwise. This will allow for future changes or expansion with having to install new cables.
14. The installation will include coordination, testing and problem resolution with the system vendors.
15. Provide any necessary screws, anchors, clamps, tie wraps, distribution rings, miscellaneous grounding and support hardware, etc., necessary to facilitate the installation of the cable plant system.
16. Furnish any special installation equipment or tools necessary to properly complete the installation.
17. Failure to follow the appropriate guidelines may require the installer to provide additional material and labor necessary to properly rectify the situation. This shall also apply to any and all damages sustained to the cables by the installer during the implementation.
18. Plug conduits where cabling has been installed in the main equipment room, backbone and other cable entrance locations with re-enterable duct seal of flame retardant putty.
19. All wiring, materials, and equipment must be listed and labeled by a nationally recognized testing laboratory. Original Equipment Manufacturer (OEM) documentation must be provided to the Owner, which certifies performance characteristics which meet EIA/TIA 568 Standards.
20. All techniques and fixtures must result in ease of maintenance and ready access to all components for testing measurements. No self tapping screws shall be used. All parts shall be made of corrosion resistant material, such as plastic, anodized aluminum or brass.
21. All materials used in installation shall be resistant to fungus growth and moisture deterioration. Dissimilar metals apt to corrode through electrolysis under the environmental operating conditions specified shall be separated by an inert dielectric material.
22. Provide firestop at all fire rated penetrations.

23. Field coordinate exact feeder, tie and riser backbone cabling pathways with other trades prior to construction. All existing pathways shown are suggested routes for the contractor to use as a guideline. The contractor is required to coordinate the exact pathway. In any case where the communication pathway must be removed and re-routed due to conflicts with other trades which were not previously coordinated with all building trades, the contractor is responsible for all costs associated with the removal and relocation.
24. Provide reducer brackets in all 23" cabinets and/or racks full length of rack for installation of 19" equipment.
25. Provide bushings on all conduit ends.

B. DATA RACK RELAY

1. Bolt rack to floor.
2. Mount racks end to end in single continuous row with vertical wire managers located full length of rack between each end and on each row end.
3. Provide horizontal wire managers as follows:
   a) Front/Rear: Between each 24 port copper patch panel.
   b) Front: Between each 24 port network switch.
   c) Locate plug strips in racks with electronics.

C. Horizontal Cable Routing and Support

1. The cable shall be routed un-exposed above the ceiling with 12" of clear space above route whenever possible.
2. Conduit runs shall not exceed two 90-degree bends or 100 feet without a pull box.
3. All conduit located in the ceiling shall protrude 2 inches into the closet. Provide bushing on conduit end. Label all conduit ends and cables inside or passing through MDF and IDF Rooms.

D. Grounding Voice and Data Systems

1. Provide an approved ground at all newly installed distribution frames and protector locations using proper bonding to any existing facility. Ensure ground continuity by properly bonding all appropriate cabling, closures, cabinets, service boxes, and framework. All grounds shall consist of minimum #6 AWG copper wire and shall be supplied from the Telecommunications Main Grounding Busbar or a Telecommunications Grounding Busbar.
2. Bond metallic conduits at one end to proper ground.
3. Provide maximum 1ohm resistance at 0.05 volts at each ground bar.
4. Ground electronic components, equipment cabinets and racks, cable racks and cable trays.
5. Provide ground lead for copper cable in multiples of 25 or more.
6. For overall-shielded cable, bond shield to proper grounding sources at one end. Do not loop ground leads or share with conduit ground leads.

3.5 CLEANING

A. Clean rooms after each installation phase of the Project so that construction debris or installation debris are removed continuously as the Project progresses and new equipment being installed is not contaminated from existing construction dust or debris.

B. Provide final cleaning of room, cabinets, and equipment prior to inspection by Engineer.

END OF SECTION 271100

SECTION 271300
BACKBONE AND RISER MEDIA INFRASTRUCTURE

PART 1 - GENERAL

1.1 SUMMARY

A. Subject to the General and Special Conditions, this section shall specify.

B. Section Includes:

1. This Section includes all the backbone cable specifications for the installation of a Structured Cabling System (SCS) for the purpose of supporting voice and data communications.

C. Some items in this specification may not be required. Determine type and quantity from drawings.

D. The contractor shall install 24 strand single-mode fiber from the MDF to each IDF refer to the Telecom Drawings for details. The contractor shall install 25 pair category 3 copper riser from the MDF to each IDF. All backbone cables interconnecting separate buildings shall utilize fiber optic cable of type single mode Fiber (SMF), OS2 type. HITS may approve multimode (MMF) OM3 type fiber optic cable between buildings on a case-by-case basis. Fiber optic backbone cables should consist of a minimum of 12 strands per span or the number of required strands plus 50%, whichever is greater.

E. Work covered by this Section shall consist of furnishing labor, equipment, supplies, materials, and testing, unless otherwise specified, in performing the following operations recognized as necessary for the installation, termination, and labeling of copper backbone infrastructure as described on the Drawings and/or required by these Specifications.

F. Approved cable manufacturers are Corning Cable and Comscope for Backbone and Riser cable.

G. There shall be no proprietary connectivity parts, each cable manufacturer shall use connectivity parts associated with their respective “partners”. All connectivity be in a nonproprietary “keystone” style footprint. Jacket color shall be black for copper backbone, and blue for copper horizontal cable. Single mode fiber shall be yellow and multimode 50 micron shall be aqua.

1.2 REFERENCES

Section 270000 in its entirety shall be included as part of this specification.

A. Related Sections:

1. Section 01
2. Section 270000: Communications
3. Section 270526: Telecommunication Grounding and Bonding
4. Section 270528: Interior Communications Pathways
5. Section 270543: Exterior Communication Pathways
6. Section 270553: Testing Administration Identification
7. Section 271100: Communication Room Fittings
8. Section 271300: Backbone and Riser Media Infrastructure
9. Section 271500: Horizontal Media Infrastructure
10. Section 272100: Data Communication Network Equipment
11. Section 274100: Audio Video System
12. Section 280500: Electronic Safety and Security
13. Section 281300: Access Control System (ACS)
14. Section 282300: Digital Video Surveillance System (DVSS)

1.3 SUBMITTALS

A. Follow Section 013300 – Submittal Procedures, Section 270500 - Common Work Results for Communications, and the following:

B. Copper Cable and Patch Cords - Submit data on cable including:
1. Manufacturers name.
2. Manufacturers model and part numbers.
3. Cable numbers.
4. Cable specifications including quantity of pairs, material, insulation, performance, attenuation, NEXT, diameter, conductor size, jacket, weight and color.
5. Provide length for patch cords.
6. Provide connector type for patch cords.

C. Fiber Cable and Patch Cords - Submit data on cable including:
1. Manufacturers name.
2. Manufacturers model and part numbers.
3. Cable numbers.
4. Cable specifications including quantity of fibers, material, insulation, jacket, wavelength, attenuation, diameter, bend radius, core, cladding, coating, buffering, weight and color.
5. Provide length for patch cords.
6. Provide connector type for patch cords.

D. Devices - Submit data on fiber connectors,
1. Manufacturers name.
2. Manufacturers model and part numbers.
3. Drawing of each device.

E. Connecting Hardware - Submit data on fiber patch panels and copper termination panels.

1. Manufacturers name.
2. Manufacturers model and part numbers.
3. Equipment specifications including quantity of ports, material, dimensions, mounting, terminating devices and color.

F. Splicing and Terminations - Submit data including:

1. Splicing and terminating tools, materials and method.

1.4 COORDINATION

A. Refer to General or Special Conditions.

B. Refer to Division 26, Electrical Work

1.5 QUALITY ASSURANCE

A. All data contractor installation personnel must be BICSI Certified Installer Level I or higher. The onsite supervisor of the data contractor must be a BICSI Certified Technician. The data contractor must have on staff a BICSI Certified RCDD. All certifications must be current. Proof of certification must be presented at the pre-installation meeting.

B. Assure that the "as installed" system is correct and complete per construction documents: including engineering drawings, manuals, and operational procedures in such a manner as to support maintenance and future expansion of the system.

C. Owner/Architect/Engineer retains the right to access and inspect all work during the entire duration of the project and any items that do not adhere to the standards, reference, contract, bid, or project documents will be corrected immediately at the expense of the contractor.

D. UL Compliance: Provide products that are UL-classified and labeled.

E. Verification: The Owner will maintain inspection personnel on the job site. It is incumbent upon the Contractor to verify that the installation and material used has been inspected before it is enclosed within building features, or otherwise hidden from view. The

Contractor shall bear costs associated with uncovering or exposing installations or features that have not been inspected.

F. Equipment Qualifications: The Contractor is to use equipment and rigs designed for pulling, placement and termination of multipair copper cable; including reel trucks, mechanical mules, sheaves, shoes, anchors etc., and equipment for drilling masonry, installing anchors, etc., to install support and cable management hardware.

G. Backbone Cable Testing

1. Complete end-to-end test results for all copper UTP and fiber optic lines installed is required.
2. All fiber optic cable must be visually inspected and optically tested on the reel upon delivery to the installation site. Using an Optical Time Domain Reflectometer (OTDR), an access jumper with like fiber, a pigtail, and a mechanical splice, all fibers shall be tested for continuity and attenuation. Testing for continuity and attenuation on the reel must confirm factory specifications to ensure that the fiber optic cable was not damaged during shipment. The test results must match the results of the factory-attached tag on the reel, or the fiber shall not be used. Reel data sheet must be provided showing test results.
3. End to end (bi-directional) test measurements shall be provided for singlemode and multimode fibers (2 wavelengths per test is required). Test results must be submitted for review as part of the installation inspection requirements. Test results shall be in paper form and electronic form and must contain the names and signatures of the technicians performing the tests.
4. Testing shall be performed on 100% of the fibers in the completed end-to- end system. ANSI/TIA/EIA-568-A, Annex H, provides the technical criteria and formulae to be used in fiber optic testing. Note however, that all fiber must be tested, rated and guaranteed for Ethernet Giga speed 1000B-X performance. Additionally, all fiber optic cable links must pass all installation and performance tests both recommended and mandated by the cable manufacturer.
5. 100% of all pairs in backbone copper cables shall be tested for continuity and wire-map.

H. FORMAT

1. Test Results must be submitted in 2 formats. First, must be original file(s) downloaded from tester. Second, the file must be cohesively placed in Excel format with the following fields: ER/TR RM # / RM # of drop / Port # / all relevant test information in as many fields as necessary and delivered in electronic format.
2. Care with reference to above format criteria, should be taken when recording the information in the tester, proper consistency with port identification is required.
3. As Built drawings must be submitted with dwg file extensions.

I. DELIVERY, STORAGE, AND HANDLING

J. Provide equipment necessary to handle, transport, and deliver materials, including EFM, from storage site to work area.

K. Store components in original wrappings, and protect from dirt, weather and construction work traffic.

L. Thoroughly inspect materials for damage before taking custody.

1.6 WARRANTY

A. If items supplied as part of Project have warranties longer than one year from date of final acceptance, Contractor shall supply longer warranty.

PART 2 - PRODUCTS

2.1 MANUFACTURERS

A. Copper Cable – Backbone:
1. Belden
2. General Cable
3. Berk-Tek
4. Commscope Systimax/Uniprise Solution
5. Mohawk/CDT

B. Fiber Cable:
1. Commscope Systimax/Uniprise Solution
2. Corning

C. Copper Connectors – UTP:
1. Belden
2. Commscope Systimax/Uniprise Solution
3. Leviton
4. Hubbell
5. Panduit

D. Fiber Connectors:
1. Commscope Systimax/Uniprise Solution
2. Corning

2.2 COPPER WIRE AND CABLES

A. 100 Ohm UTP Wire – General:

1. 24 AWG thermoplastic insulated solid conductors formed into individually twisted pairs and enclosed by a thermoplastic jacket.
2. Diameter: 0.048" maximum for insulated conductor; 0.25" maximum for 4pr UTP cable.
3. Breaking Strength: 90 lb minimum.
4. Bending Radius: Minimum 1" at -20C without jacket or insulation cracking.
5. DC Resistance: Maximum 9.38 ohms at 328 feet and 20 Celsius.
6. DC Resistance Unbalance: The resistance unbalance between the two conductors of any pair shall not exceed 5% when measured at a temperature of 20 Celsius.
7. Capacitance Unbalance: The capacitance unbalance to ground at 1 khz of any pair shall not exceed 330 pF per 328 feet at 20 degrees Celsius.
8. Propagation Delay: The propagation delay of any pair should not exceed 5.7 ns/m at 10 MHz.
9. Propogation Delay Skew shall not exceed 15ns/100m at 10 MHz.
10. Insulation: The copper cable insulation shall be comprised of fluorinated ethylene propylene (FEP).

B. Backbone 100 Ohm UTP - Backbone refers to cables greater than 4 pairs used in backbone distribution. The cable shall conform to the above 100 Ohm UTP Wire Standards and the following:
1. Color Code: Shall follow the industry standard color code composed of 10 distinctive colors to identify 25 pairs (refer to ANSI/ICEA S-80-576 for colors).
2. Core Assembly: When cable sizes larger than 25 pairs are required, the core shall be assembled in units of up to 25 pairs. Each unit shall be identified by a color coded binder. Binder color code integrity shall be maintained whenever cables are spliced.
3. Dielectric Strength: The insulation between each conductor and the core shield shall be capable of withstanding a minimum DC potential of 5KV for 3 seconds.
4. The interior cable shall be provided with a drain wire.
5. Performance: The cable shall meet cat 6 performance requirements for greater than 4 thru 50PR counts and shall meet Cat 3 standards for greater than 50PR counts.
6. Backbone Copper Cable (Interior)
   a. Core of solid copper conductors wrapped in one or more layers of dielectric material to ensure compliance with the dielectric strength requirements.
   b. Jacket: The core shall be enclosed by a uniform, continuous PVC jacket.

C. The multi-pair copper cables shall be in plenum form unless placed in conduit or specified otherwise.

D. The non-shielded, plenum cable shall be conformance tested per Section 270500 – Common Work Results for Communications. The cable shall be UL Listed for Fire Safety and ISO 9001Certified. The non-shielded cable shall be available in pair counts as noted on the contract drawings. If the approved manufacturer does not make the specified pair count, the contractor shall provide the next larger count size and associated additional termination hardware at no additional cost to the contract.

.

E. The non-shielded, nonplenum cable shall be conformance tested per Section 270500 – Common Work Results for Communications. The cable shall be UL� Listed for Fire Safety and ISO 9001 Certified. The non-shielded cable shall be available in pair counts as noted on the contract drawings. If the approved manufacturer does not make the specified pair count, the contractor shall provide the next larger count size and associated additional termination hardware at no additional cost to the contract.

F. Backbone Copper Cable (Exterior)
1. Core of plastic insulated solid copper conductors wrapped in one or more layers of dielectric material, a shield and a steel wrap.
2. Jacket: The core shall be enclosed by a PVC jacket.
3. The cable shall be rated for exterior underground duct and direct burial use. It shall be lightning and wildlife protected.

G. The copper cable shall meet or exceed the following electrical specifications listed below:
1. Maximum Attenuation (dB/100 m [328 ft.])

Frequency	Category 3	Category 6
1.00 MHz	2.6 dB	2.0 dB
4.00 MHz	5.6 dB	4.1 dB
10.00 MHz	9.7 dB	6.5 dB
16.00 MHz	13.1 dB	8.2 dB
20.00 MHz	-	9.3 dB
25.00 MHz	-	10.4 dB
31.25 MHz	-	11.7 dB
62.50 MHz	-	17.0 dB
100.00 MHz	-	22.0 dB

2. Pair-to-Pair NEXT (Worst Pair) dB/100 m [328 ft]

Frequency	Category 3	Category 6
1.0 MHz	39.1 dB	>60
4.0 MHz	32 dB	53.5 dB
10.0 MHz	26 dB	47.0 dB
16.0 MHz	23 dB	43.6 dB
20.0 MHz	-	42.0 dB
25.0 MHz	-	40.3 dB
31.25 MHz	-	38.7 dB
62.5 MHz	-	33.6 dB
100 MHz		30.1 dB

2.3 OPTICAL FIBER AND CABLES

A. Multimode Optical Fibers
1. Fibers must comply with TIA 492 specifications and IS 11801 Standards for OM4.
2. Multimode with a graded index profile capable of operation at 850 nm and 1310 nm.
3. Core: 50 ⍰ 3 micrometers.
4. Cladding: 125 ⍰ 2 micrometers.
5. Coating Diameter: 250 ⍰ 10 microns
6. Cladding non circularity: < 1.5%.
7. Core/Clad Concentricity Error: 1.5 microns
8. Coating/Clad Concentricity Error: 12 microns
9. The fiber shall be manufactured by the outside vapor deposition (OVD) process.
10. The fiber coating shall be mechanically strippable.
11. The supplier shall certify identity of the fiber manufacturer for all fiber used in the specified cable and, upon request, supply fiber ID numbers to ensure traceability.
12. The 50/125 nm Optical Fiber shall perform as shown in the table below:
13.

Wave-length (nm)	Maximum Attenua-tion (dB/Km)	Min Info Trans. Capacity (MHZ-Km)	Max Trans. Dist for 10 GbPS
850	3.0	350 0	550m
130 0	1.0	500	300m

B. Multimode Fiber Cable - Interior (Belden or approved equal)
1. The optical fiber multimode cable construction shall consist of fibers capable of operation at 850 nm and 1300 nm.
2. The indoor cable shall contain non-metallic strength members.
3. The cable shall be plenum rated and shall meet the requirements of NEC for OFNP.
4. The cable shall comply with Bellcore, FDDI, TIA-568, latest edition, IEEE802 and ICEA Standards.
5. The cable shall have a minimum bend radius of ten (10) times the diameter installed and 20 times the outer diameter during installation.
6. The cable shall have a tensile strength of 600 lbs. minimum without changing the fiber characteristics.
7. Assemble cable using 6 or 12 fiber subunits stranded around a central strength member in a RoHS-compliant design. Each subunit shall be uniquely numbered at a minimum of 10' intervals.
8. Sheath: Cover the core by a polyethylene protective sheath. The protective sheath shall consist of an overall polyethylene jacket.

9. The cable shall be air coil type.
10. Each fiber buffer jacket shall be color coded separately. Within unit tubes or sub-bundles, each fiber shall have a distinctly different color coding. Individual fibers shall be enclosed in oversized plastic tubes which are filled with a non-hygroscopic compound, or coated with heavy polymer coating and enclosed in a tight flexible thermoplastic jacket, to provide strength for practical handling, to prevent micro bends and to preserve the individual fibers during installation and long term service.
11. All fiber cable shall be routed in cabletray, innerduct and/or conduit.

C. Multimode Fiber Cable - Exterior (Belden or approved equal)
1. The optical fiber multimode cable construction shall consist fibers capable of operation at 850 nm and 1300 nm.
2. The cable shall contain non-metallic strength members.
3. The cable shall be OSP rated.
4. The cable shall comply with Telcordia GR-20, TIA-568, latest edition, EN 187105 and ANSI/ICEA Standards.
5. The cable shall have a minimum bend radius of ten (10) times the diameter installed and 20 times the outer diameter during installation.
6. The cable shall have a tensile strength of 600 lbs. minimum without changing the fiber characteristics.
7. Assemble cable using 6 or 12 fiber subunits stranded around a central strength member in a RoHS-compliant design. Each subunit shall be uniquely numbered at a minimum of 10' intervals.
8. Sheath: The cable jacket for over 12-strand fiber cable shall consist of a corrugated steel tape armor with MDPE outer jacket. The cable jacket for 12 strand fiber cable and below shall consist of MDPE outer jacket with no corrugated steel tape armor.
9. The cable shall be Gel-Free, Stranded loose tube.
10. Each fiber buffer jacket shall be color coded separately. Within unit tubes or sub-bundles, each fiber shall have a distinctly different color coding. Individual fibers shall be enclosed in oversized plastic tubes which are filled with a non-hygroscopic compound, or coated with heavy polymer coating and enclosed in a tight flexible thermoplastic jacket, to provide strength for practical handling, to prevent micro bends and to preserve the individual fibers during installation and long term service.
11. All fiber cable shall be routed in maxcell duct and/or conduit.

D. Single-Mode Optical Fibers
1. Single-mode optical fibers shall be Zero Water Peak Single-Mode Optical Fibers with and shall comply with ITU-T G.652.D. Fibers must comply with TIA 455 and IEC 793 test methods.
2. Fibers shall be optimized for operation over the entire wavelength range from 1280nm to 1625 nm.
3. Clad Diameter: 125.0 ±0.7 micrometer.
4. Clad Noncircularity: Less than 1%.
5. Core/Clad Concentricity Error: Less than 0.5 micrometers.

6. Coating Diameter (colored): 254 ±0.7 micrometer.
7. Attenuation Uniformity: There shall be no point of discontinuity greater than 0.10 dB at any wavelength.
8. The fiber shall be manufactured by the outside vapor deposition (OVD) process.
9. The supplier shall certify identity of the fiber manufacturer for all fiber used in the specified cable and, upon request, supply fiber ID numbers to ensure traceability.
10. Fiber shall be depressed clad type.

E. Single-Mode Optical Fiber Cable - Exterior (Belden or approved equal)

1. The single-mode fiber optical cable shall consist of fibers separated into color-coded binder groups and surrounded by a water swellable tape and binder.
2. The cable shall have a steel tape armor that envelopes the binder group and has a rip cord with MDPE outer jacket that is UV resistant.
3. The cable shall comply with Telcordia GR-20, EN 187105 and Insulated Cable Engineers Association (ICEA) Standards.
4. The cable shall be rated for exterior underground conduit, direct burial, aerial applications and shall be rodent and lightning resistant.
5. Assemble the groups to form a single compact core.
6. The cable shall be Gel-Free, Stranded loose tube type.
7. The outer sheath jacket shall be comprised of medium-density polyethylene (MDPE).
8. The cable shall have a minimum bend radius of ten (10) times the diameter installed and 20 times the outer diameter during installation.
9. The cable shall have a tensile strength of 600 lbs. minimum without changing the fiber characteristics for trunk cable and 125 lbs. for riser cable.
10. The single-mode transmission parameters are shown below:

Wave-length	Maximum Attenua-tion
1310	0.34 dB
1385	0.31 dB
1490	0.30 dB
1550	0.22 dB

F. Optical fiber conductors shall follow standard color code schemes.
1. Fiber numbers and binders shall correspond to the color code as follows:
   a. Fiber/Binder #1 – Blue
   b. Fiber/Binder #2 – Orange
   c. Fiber/Binder #3 – Green
   d. Fiber/Binder #4 - Brown

e. Fiber/Binder #5 – Slate
f. Fiber/Binder #6 – White
g. Fiber/Binder #7 – Red
h. Fiber/Binder #8 – Black
i. Fiber/Binder #9 – Yellow
j. Fiber/Binder #10 – Violet
k. Fiber/Binder #11- Rose
l. Fiber/Binder #12- Aqua

G. Optical Fiber Patch Cable
1. The optical fiber patch cord shall consist of 1 or 2 fibers (as noted on the contract documents) of the same type as the fiber cabling and shall meet the optical fiber cabling requirements for attenuation and transmission capacity.
2. Cable manufacturer shall be ISO 9000 certified.
3. Cable shall be tight buffered type.
4. Optical Fiber Patch Cord Connectors: Connectors shall be as designated in the Connecting Hardware Section of this specification. The mated connectors shall have a pull strength of
5. 7.5 lbf and a maximum attenuation of 0.4 dB.
6. 5. Splices: Fusion splices shall not exceed a maximum optical attenuation of 0.2 dB.

2.4 CONNECTING HARDWARE

A. General: The connecting devices covered in this section include fiber optic outlets/connectors, and patch panels.
1. Provide connecting devices with a minimum rating equivalent to the wire terminating on the device.
2. All testing for plug and socket type devices shall be tested in a mated state.
3. The patch panel shall be suitable for mounting at the location shown on the drawings.
4. Provide panel with quantity of ports as shown on the drawings. All ports shall be provided with connectors.
5. Label all panels.
6. All terminations shall follow T568B pin-out configuration.

B. 100 Ohm UTP Connectors
1. The connecting hardware shall be of the insulation displacement contact (IDC) type.
2. Data: Terminate the 4-pair copper data cable into the 8 position, non-keyed, modular RJ- 45 jack with the pin/pair assignments wired per T568B. The modular connector shall comply with the Level A reliability requirements of IEC 603-7. The data RJ-45 jackshall match the Category and the data terminating cable rating.
3. Plug insertion life shall be a minimum of 750 insertions.
4. IDC termination life shall be a minimum of 200 terminations.
5. DC Resistance: Maximum 0.3 Ohms.

6. Telephone: Terminate the four telephone to a 8 position, non-keyed, modular RJ-45 jack with the pin/pair assignments wired per T568B. The jack shall match the category rating of the terminating voice cable.
7. The connectors shall be tested to meet the following minimum channel performance parameters:

Category 6 Channel Performance										
Freq (MHz)	Atten (dB)	pr-pr NEXT (dB)	ACR (dB)	PS NEXT (dB)	PS ACR (dB)	pr-pr ELFEXT (dB)	PS ELFEXT (dB)	Return Loss (dB)	Phase Delay (ns)	Delay Skew (ns)
1	2.1	66.3	64.2	66.1	64.0	61.8	59.8	18.0	580	30
4	4.2	56.6	52.4	56.2	52.0	49.8	47.8	18.0	562	30
8	6.0	51.6	45.6	51.2	45.2	43.8	41.8	18.0	557	30
10	6.7	50.0	43.3	49.6	42.9	41.8	39.8	18.0	555	30
16	8.6	46.6	38.0	46.2	37.6	37.8	35.8	18.0	553	30
20	9.6	45.0	35.4	44.6	35.0	35.8	33.8	18.0	552	30
25	10.4	43.4	33.0	42.9	32.5	33.9	31.9	17.0	551	30
31.25	12.2	41.7	29.5	41.2	29.0	31.9	29.9	16.0	550	30

Category 6 Channel Performance										
Freq (MHz)	At-ten (dB)	pr-pr NEXT (dB)	ACR (dB)	PS NEXT (dB)	PS ACR (dB)	pr-pr ELFEXT (dB)	PS ELFEXT (dB)	Re-turn Loss (dB)	Phase De-lay (ns)	De-lay Skew (ns)
62.5	17.6	36.6	19.0	36.1	18.5	25.9	23.9	13.1	549	30
100	22.8	33.1	10.3	32.6	9.8	21.9	19.9	11.0	548	30
125	25.8	31.5	5.7	30.9	5.1	19.9	17.9	10.1	547	30
155.5	29.1	29.8	0.7	29.2	0.1	18.0	16.0	9.1	547	30

C. Optical Fiber Connecting Hardware
1. Connector: The connector shall be duplex LC type for terminating singlemode and multimode fibers.
2. The connector shall be ceramic tip fiber optic connector plug.
3. The connector shall be an aerobic adhesive-style requiring no curing time or proprietary tools.
4. The ferrul shall be zirconia.
5. Identification: The multimode fiber connectors and adapters shall be beige in color. The single mode fiber connectors and adapters shall be blue in color.
6. Pull Strength: The connector shall have an optical axial pull strength of 0.5 lbf.
7. Attenuation: The maximum optical attenuation per each mated LC connector pair shall not exceed 0.4 dB. The total optical attenuation through the cross-connect from any terminated optical fiber to any other terminated optical fiber shall not exceed 0.4 dB.
8. Return Loss: The LC connector return loss shall be greater than or equal to 20 dB for multimode fiber at 23 degrees Celsius.
9. Connector Coupling: Shall have alignment sleeves and shall be Bayonet/Threaded version with locknut. The connector coupling shall accept two (2) connector plugs.
10. Connector Box: The box shall have the ability to secure the optical fiber cable and provide for a minimum of 30 mm bend radius. A minimum of 3.28 feet of two-fiber optical cable or two buffered optical fibers shall be accessible for termination

purposes. The box shall be 4" x 4" with an additional surface mounted box (which mounts to the 4"x4' box), both providing the bend radius, slack storage, and adapter interface.

2.5 PATCH PANELS

A. General:
1. The patch panel shall be suitable for mounting at the location shown on the drawings. Rack mount with the appropriate environmental housing to protect from physical damage and direct exposure to moisture of other corrosive elements.
2. Provide panel with quantity of ports as shown on the drawings. All ports shall be provided with connectors.
3. Label all panels.
4. 100 Ohm UTP Patch Panels:
   a. Provide patch panel with RJ-45 connectors on the front panel and 110 style punch down terminations on the rear of the panel. The RJ-45 connectors shall be of the same rating as the terminating cable.
   b. Keystone type patch panels are not acceptable.
   c. The patch panel shall be minimum 2RU for 24-port or 48-port as indicated on the contract documents and shall include 2 integrated patch cord cable managers and 2 rear cable management bars. Patch panels shall be Belden REVConnect Category 6 Series with termination manager or an approved equal.

B. Fiber Optical Patch Panels:
1. The patch panel shall be suitable for mounting at the location shown on the drawings. Either wall or rack with the appropriate environmental housing to protect from physical damage and direct exposure to moisture of other corrosive elements.
2. Provide panel with quantity of ports as shown on the drawings.
3. Provide fiber patch panels complete with all fiber connectors and couplings on the front and on the rear of the panel.
4. Provide covers for all spare fiber couplings.
5. The fiber patch panel shall include a transparent, hinged and fully removable front and rear door, magnified labels for each port and front and rear sliding fiber tray. The patch panel shall be either 1RU with 72 LC ports of 2RU with 144 LC ports as indicated on the contract documents.
6. Provide with fiber management rings, cable strain relief and patch cord bend radius guides.
7. Patch panels shall be Belden ECX-02U Series fixed shelf using modular cassettes or approved equal. Furnish shelf with connectors to match the fiber type terminating.

C. Telephone Connecting Modules
1. The telephone connecting modules shall be 110 style blocks.
2. The unit shall have the capacity to terminate minimum 25 cable pairs each.
3. Block shall be fire retardant molded plastic.

4. Unit shall have horizontal index strip to secure and organize cables.
5. Unit shall accommodate 22 through 26 gauge wire.
6. Block shall be wall or rack mountable.
7. Block shall be provided with mounting bracket, labels and covers.
8. Provide block pair size as shown on the drawings.
9. Each block shall be labeled.
10. Blocks shall be minimum of the same rating as the terminating horizontal cable.
11. Provide all blocks with legs.

D. Protectors (Outside Plant applications):

Product Number	Description	COM code
331901	Circa 1880NA1/NSC-200: 188-Type, 200-pair protector panel. Input on left side for front of cabinet.	N/A

Product Number	Description	COM code
331902	Circa 1880NA1/NSC-200: 188-Type, 200-pair protector panel. Input on right side for back of cabinet.	N/A
750031	Circa C4B1S: 5-pin solid-state protector module, black shell, 300 volt, sneak current protection and built-in test points.	N/A
4C3S-75	Solid-state protector unit for non-ringing circuits (red)	105 581 086

2.6 COPPER CABLE ROUTES

A. The Contractor shall install copper cable route with a minimum bend radius of six times the diameter of the cable.

B. The Contractor shall conceal all horizontal distribution wiring either above accessible ceilings or in minimum 1" conduit where exposed. If it becomes necessary to use an alternative method, the Contractor shall obtain approval from the Engineer prior to the use of the alternate method.

PART 3 - EXECUTION

3.1 EXAMINATION

A. Verify conduit, raceways, boxes, fittings and bodies are properly installed following Sections 260533 - Raceway and Boxes for Electrical Systems.

B. Verify grounding and bonding following Section 260526 – Grounding and Bonding for Electrical Systems.

C. Verify supporting devices are properly installed following Section 260529 – Hangers and Supports for Electrical Systems.

D. All protected telecommunication terminations require bonding, grounding and a Busbar.

3.2 PREPARATION

A. Maintain temperature of between 65 degrees Fahrenheit and 78 degrees F and between 30 and 50 percent humidity in areas of voice and data system work, following Section 015000 – Temporary Facilities and Controls.

3.3 INSTALLATION

A. Install work following drawings, manufacturer's instructions and approved submittal data. The number of cables per run, outlet configuration and other pertinent data will be included on the drawings.

B. All installation shall be done in conformance with the most current TIA 568 and BICSI standards. The Contractor shall ensure that the maximum pulling tensions of the specified distribution cables are not exceeded and cable bends maintain the proper radius during the placement of the facilities. Failure to follow the appropriate guidelines will require the Contractor to provide in a timely fashion the additional material and labor necessary to properly rectify the situation. This shall also apply to any and all damages sustained to the cables by the Contractor during the implementation.

C. The SCS installation should meet all applicable national and local codes pertaining to low voltage cable system installations.

D. The contractor will adhere to the installation schedule of the general contractor and should attend all construction meetings scheduled by the general contractor.

E. The contractor will provide service loops (slack) for cables terminating in the main equipment room or the telecommunications closets. A 6 foot service loop will be provided above the access ceiling or cable trays unless specified otherwise. This will allow for future changes or expansion with having to install new cables.

F. The installation will include coordination, testing and problem resolution with the system vendors.

G. Label cabling per Section 270500 – Common Works Results for Communications.

3.4 COPPER CABLE

A. Test all cable prior to installation. Upon failure to perform testing, the installer shall accept the cable as good and assume all liability for the replacement of the cable should it be found defective at a later date.

B. All conformance standards must be certified for multipair and individual cable runs.

C. Jacketing and insulation must satisfy the Underwriter's Laboratories (UL) listed fire rated cable insulation requirements in plenum areas.

D. Any pulling compound or lubricant used in cable installation must not deteriorate the conductor or the insulation. Provide 3M type WLC or an approved equal.

E. The Contractor shall install copper cable with a minimum bend radius of six times the diameter of the cable.

F. Install two (2) loops of slack cable (or 30 feet) in every manhole.

G. Install 10 feet of spare copper cable (service loop) in each closet prior to termination. Arrange slack cable on wall. Provide velcro type tie wrap for cable support and organization.

H. All backbone or riser cable shall be rated for plenum use unless routed in conduit.

I. Do not exceed the manufacturers recommended maximum pulling tension for copper backbone cables. The Contractor shall provide a tension meter during the pulling of all cables. If the meter shows that the tension has been exceeded, the Contractor discard the cable and pull new cable.

3.5 FIBER CABLE

A. Install fiber connectors and terminate and label all fiber optic strands. Cure, prime, polish and buff all fibers prior to installing connector.

B. Test all cable prior to installation. Upon failure to perform testing, the installer shall accept the cable as good and assume all liability for the replacement of the cable should it be found defective at a later date. Provide a copy of the test results to the Owner and the Engineer for approval.

C. Jacketing and insulation must satisfy the Underwriter's Laboratories (UL) listed fire rated cable insulation requirements in plenum areas.

D. All fiber cables shall be installed in innerduct.

E. Any pulling compound or lubricant used in cable installation must not deteriorate the conductor or the insulation. Provide 3M type WLC or an approved equal.

F. The maximum pulling tension of fiber trunk cable is 600 lbf. and 125 lbf for riser cable or per the manufacturer recommendation, whichever is less . Provide a tension meter during the pulling of all cable. If the meter shows that the tension rating has been exceeded, the Contractor shall discard the cable and pull new cable.

G. Multi-mode fiber cable shall not exceed 2000 meters. Single-mode fiber cable shall not exceed 3000 meters.

H. The Contractor shall install fiber cable with a minimum bend radius of ten times the diameter of the cable. The bend radius shall be a minimum of twenty times the cable diameter during installation. The minimum bend radius for 2 stand fiber patch cable shall be a minimum of 1 inch.

I. Install 10 feet of spare fiber cable (service loop) in each closet prior to termination.

J. Install two (2) loops of slack cable (or 30 feet) in every manhole.

K. All fiber splices shall be fusion spliced. The contractor must notify the designer prior to any splicing operation. Fiber splices are acceptable only in the cases where the distance is greater than 2 kilometers or unless noted on the drawings.

3.6 DEVICES AND PATCH PANELS

A. The amount of untwisting in a pair when terminating to connecting hardware shall be no greater than 0.5 inches for category 5 cables and above. No greater than 1.0 inches for category 3 cables.

B. Cables should be connected with connecting hardware of the same category or higher. Also, included are patch cables and jumpers.

C. The connecting hardware used for copper cabling shall be installed to provide minimal signal impairment by preserving wire pair twists as closely as possible to the point of termination.

D. The connecting hardware shall be installed to provide a well-organized installation with cable management and termination practices.

E. Strip back only as much jacket as necessary to terminate the cable.

F. Avoid kinking or crimping the cable wire.

G. Patch panels shall be installed in a neat, well organized manner with optical fiber management and sound optical termination practices.

H. Using a proper punch down tool. Punch each termination down tight, right-up to the jacket. Keep the jacket as close to the connector sleeve as possible.

I. Maintain straight through polarity, do not split pairs.

J. Install devices only in electrical boxes which are clean and free from excess building materials, debris, etc.

K. Gang devices installed at one location together under one coverplate.

L. Align the tops of all group mounted devices. Install plumb and aligned in the plane of the wall.

M. Install devices in vertical position unless otherwise noted.

N. Install galvanized steel plates on devices in unfinished areas and nylon thermoplastic plates in finished areas.

O. Install blanks in all ports not terminated.

P. Mounting Heights:
   1. Refer to contract documents.

3.7 TESTING COPPER AND FIBER OPTICS

A. Tests under Section 270500 – Common Work Results for Communications.

3.8 AS BUILT DRAWINGS

A. Provide three (3) copies of E and three (3) copies of C size prints along with CADD files in .dwg formats showing floor plans with room numbers and actual backbone cabling and pathway locations and labeling. The deliverable is required within 5 business days of final cable testing.

   1. Red Line Drawings: Contract must keep one (1) E size set of floor plans on site during work hours with installation progress marked and backbone cable labels noted. Contractor may be asked to produce these drawings for examination during construction meetings or field inspections.

END OF SECTION 271300

SECTION 271500
HORIZONTAL MEDIA INFRASTRUCTURE

PART 1 - GENERAL

1.1 SUMMARY

A. Subject to the General and Special Conditions, this section shall specify the requirements for the Communications Horizontal Cabling.

B. Section includes: twisted pair cable, connectors, faceplates and testing.

C. All voice and data horizontal cables shall consist of plenum rated, Category 6, 4 pair UTP copper cable from the appropriate IDF to each Telecommunications Outlet location as indicated on the Telecommunications Drawings.

D. Installation and termination of voice and data Category 6 as designated on the on the Telecommunications Drawings.

E. Installation and termination of two (2) Category 6 cable at each Wireless Access Point Outlet as indicated on the Telecommunications Drawings.

F. Installation and termination of coaxial cable CATV locations as indicated on the Telecommunications Drawings.

1.2 REFERENCES

Section 270000 in its entirety shall be included as part of this specification.

A. Related Sections:
1. Section 01
2. Section 263353: Telecommunications Uninterruptible Power Supply (UPS)
3. Section 270000: Communications
4. Section 270526: Telecommunication Grounding and Bonding
5. Section 270528: Interior Communications Pathways
6. Section 270543: Exterior Communication Pathways
7. Section 270553: Identification and Labeling of Communication Infrastructure
8. Section 271100: Communication Room Fittings
9. Section 271300: Backbone and Riser Media Infrastructure
10. Section 271500: Horizontal Media Infrastructure
11. Section 272100: Data Communication Network Equipment
12. Section 280500: Electronic Safety and Security
13. Section 281300: Access Control System (ACS)
14. Section 282300: Digital Video Surveillance System (DVSS)

1.3 COORDINATION

A. Refer to General or Special Conditions.

B. Refer to Division 26, Electrical Work

1.4 SUBMITTALS

A. Follow Section 013300 – Submittal Procedures, Section 270500 – Common Work Results for Communications, and the following:
1. Copper Cable and Patch Cords - Submit data on cable including:
   a. Manufacturers name.
   b. Manufacturers model and part numbers.
   c. Cable numbers.
   d. Cable specifications including quantity of pairs, material, insulation, performance, attenuation, NEXT, diameter, conductor size, jacket, weight and color.
   e. Provide length for patch cords.
   f. Provide connector type for patch cords.
2. Devices - Submit data on outlets, cover plates, and fiber connectors,
   a. Manufacturers name.
   b. Manufacturers model and part numbers.
   c. Outlet specifications including category rating, material, wiring, termination type, wire type and color. Also provide associated coverplate.
   d. Drawing of each device.
3. Connecting Hardware - Submit data on copper patch panels, fiber patch panels.
   a. Manufacturers name.
   b. Manufacturers model and part numbers.
   c. Equipment specifications including quantity of ports, material, dimensions, mounting, terminating devices and color.
4. Connectors - Submit product data on RJ45 outlets and fiber connectors.
   a. Manufacturers name.
   b. Manufacturers model and part numbers.
   c. Connector specifications including material, dimensions, attenuation, NEXT connection losses, ratings, and construction.
   d. Drawing of equipment.
5. Splicing and Terminations – Submit data including:
   a. Splicing and terminating tools, materials and methods.
6. Testing – Submit product data including:
   a. Equipment manufacturer, model and serial number.
   b. Graphic diagram representing test procedure including all connectors, light source, origin and destination for each cable tested.

1.5 QUALITY ASSURANCE

A. Assure that the "as installed" system is correct and complete per construction documents: including engineering drawings, manuals, and operational procedures in such a manner as to support maintenance and future expansion of the system.

B. Owner/Architect/Engineer retains the right to access and inspect all work during the entire duration of the project and any items that do not adhere to the standards, reference, contract, bid, or project documents will be corrected immediately at the expense of the contractor.

C. UL Compliance: Provide products that are UL-classified and labeled.

D. Follow Section 17080 and the following:

E. Material and installation shall meet requirements of NFPA 70.

F. Material, when applicable, shall be approved by a Nationally Recognized Testing Laboratory (NRTL).

G. Monitor and maintain quality control over manufacturers, suppliers, subcontractors, work force, site conditions, products, and services to ensure Work is of specified quality.

H. Workmanship: Install material and equipment in neat and workmanlike manner, in accordance with NEC Section 800-6. Specified requirements represent minimum acceptable quality for Work. Comply with industry standards except when more stringent requirements are specified herein, and tolerances indicate higher standards or more precise workmanship.

I. All communications work shall be performed under the direct on-site supervision of a Building Industry Consulting Service International, Inc. (BICSI) Certified Registered Communications Distribution Designer (RCDD). Submit resumes and RCDD registration to the Architect as proof. Paperwork must be approved by the Architect in writing prior to construction. The RCDD must be at the job site during construction. The RCDD shall be present during all cable testing, pulling and termination procedures.

J. Provide all materials, equipment, and installation in compliance with the latest applicable standards from ANSI, FCC, ASTM, EIA/TIA, IEEE, NEC, NFPA, NEMA, REA, and UL.

K. Installer Qualifications:

1. Knowledge of BICSI installation standards.
2. Knowledge of NEC standards.
3. Knowledge of EIA/TIA standards.
4. Five (5) years experience in the installation of fiber optic cables, including splicing, terminating and testing. Testing on fiber optic cable shall include single and multimode.
5. Three (3) years experience in the installation of Category 3 and Category 6 Unshielded Twisted Pair copper cables for voice and data distribution systems, including splicing, terminating and testing. Testing on Category 3 and Category 5 copper cable shall include complete verification with EIA/TIA cable standards.
6. Ten (10) references for project of equivalent scope, type and complexity of work completed within the last five (5) years. The Contractor shall submit as proof, supporting documents and the names, addresses and telephone numbers of the operating personnel who can be contacted regarding the installation system.
7. Must be a certified installer of the termination equipment manufacturer.

L. Install products only by qualified technicians certified by manufacturers.

M. Provide all electronic equipment with the UL label when applicable.

N. Comply in every way with the requirements of local laws and ordinances, the National Board of Fire Underwriters, and the National Electrical Code. Anything in the plans or specifications that does not strictly comply with the above laws, ordinances, and rules must be referred to the attention of the Engineer for a decision before proceeding. No change in the plans or specifications shall be made without full consent in writing of the Engineer.

PART 2 - PRODUCTS

2.1 APPROVED MANUFACTURERS FOR CHANNEL SOLUTION

A. The approved structured cabling solution for this project is Belden Certified Networking System. Substitutions for Belden are not allowed.

B. Belden Premium Performance System Cable (DataTwist 4800) Category 6

2.2 COPPER WIRE AND CABLES

A. Belden Premium Performance System Cable (DataTwist 4800) Category 6

1. Category 6+ Enhanced Premise Horizontal Cable (600MHz), 4 Pair, 23 AWG Solid Bare Copper Conductors, U/UTP, Plenum-CMP, Flamarrest® PVC-LS Jacket
2. Data: 4813 D15xxxx, color blue
3. Camera: 4813 004xxxx, color yellow

B. Belden Premium Performance System Cable (DataTwist 4800) Category 6A

1. 10GX Category 6A Enhanced Premise Horizontal Cable (625MHz), 4 Pair, 23 AWG Solid Bare Copper Conductors, U/UTP, Plenum-CMP, Flamarrest® PVC-LS Jacket
2. Wireless Access Points (WAPS): 10GX13 007100

C. Horizontal 100 Ohm UTP High Performance Cable (Belden #4813) Category 6.
1. The high-performance cable shall consist of 4 pairs, individually twisted.
2. Cables shall be plenum rated unless routed in plenum rated innerduct or conduit.
3. Color code shall be as shown in the table below:

Conductor Identification	Color Code	Abbreviation
Pair 1	White-Blue (Note 1) Blue (Note 2)	(W-BL) (BL)

Pair 2	White-Orange (Note 1) Orange (Note 2)	(W-O) (O)
Pair 3	White-Green (Note 1) Green (Note 2)	(W-G) (G)
Pair 4	White-Brown (Note 1) Brown (Note 2)	(W-BR) (BR)

1. Notes:
   a. The wire insulation is white, and a colored marking is added for identification. For cables with tightly twisted pairs (less than 1.5 inch per twist) the mate conductor may serve as the marking for the white conductor.
   b. A white marking is optional.

D. 100 Ohm UTP Patch Cable - The performance shall be as noted above for 100 Ohm copper UTP cables and as follows:
1. Cables used for patch cords and cross-connect jumpers shall have stranded conductors.
2. Insulated conductor: The insulated conductor diameter should be in the range of .032 inches to .039 inches and shall not exceed .047 inches.
3. Color Code: The color code shall match that used for 100 OHM UTP cable.
4. Transmission: The transmission shall be as shown in the table for 100 Ohm UTP cable except for attenuation. The attenuation for stranded conductors shall be a maximum of 20% greater than the attenuation for copper cables as notes above.
5. Insulation: The insulation shall be comprised of fluorinated ethylene propylene (FEP).
6. Patch cables and cross-connect jumpers shall be 10’-0” long for work area outlets. The cable shall have RJ-45 jack terminated on each end. The jack shall match the rating of the cable and work area outlet.
7. Patch cables and cross-connect jumpers shall be 20’-0” long for closets and equipment rooms. The cable shall have RJ-45 jacks terminated on each end. The jack shall match the cable rating.
8. Label: Label all patch cables on each end with cable identification and category rating.

2.3 CONNECTING HARDWARE

A. General: The connecting devices covered in this section include telecommunications outlets/connectors, patch panels, transition connectors and cross-connect blocks.
1. Provide connecting devices with a minimum rating equivalent to the wire terminating on the device.
2. All testing for plug and socket type devices shall be tested in a mated state.
3. Label all panels and connecting hardware.
4. All terminations shall follow T568B pin-out configuration

B. Coverplates

1. Provide one piece coverplates for all group mounted devices unless otherwise noted on the drawings.
2. Provide nylon thermoplastic coverplate of the same manufacturer as the device. Color shall match color of receptacles.
3. All work area wall plates shall be 4-port, single-gang coverplates with ID window unless otherwise noted on the drawings.
4. For furniture mounted outlets, the Contractor shall coordinate exact mounting and coverplate requirements with the equipment manufacturer.
5. Provide blank coverplate for all pay telephones.
6. For devices mounted in wireways or system furniture, provide device flush in wireway when possible to maintain cable bend radius. Install device and coverplate raised on wireway when bend radius cannot otherwise be maintained. Coordinate with equipment manufacturer for installation instructions.
7. All coverplates shall be flush wall type unless specifically noted otherwise on the drawings.
8. Provide stainless-steel coverplates for devices in unfinished areas.

C. 100 Ohm UTP Connectors
1. The connecting hardware shall be of the insulation displacement contact (IDC) type.
2. Data: Terminate the 4-pair copper data cable into the 8 position, non-keyed, modular RJ-45 jack with the pin/pair assignments wired per T568B. The modular connector shall comply with TIA-568, latest edition. The data RJ-45 jack shall meet or exceed the Category and the terminating data cable rating.
3. Plug insertion life shall be a minimum of 750 insertions.
4. IDC termination life shall be a minimum of 200 terminations.
5. Telephone: Terminate the four telephones to a 8 position, non-keyed, modular RJ-45 jack with the pin/pair assignments wired per T568B. The jack shall meet or exceed the category rating of the terminating voice cable.
6. The connectors shall be tested to meet the following minimum channel performance parameters:

Category 6 Channel Performance								
Freq	Insertion Loss (dB)	pr-pr NEXT (dB)	PS NEXT (dB)	pr-pr ELFEXT (dB)	PS ELFEXT (dB)	Return loss (dB)	ACR	PS ACR
1	1.9	83.0	80.9	75.1	73.8	25.0	81.2	79.1
4	3.7	74.4	72.9	63.1	60.8	29.6	70.7	69.3

Category 6 Channel Performance								
Freq	Insertion Loss (dB)	pr-pr NEXT (dB)	PS NEXT (dB)	pr-pr ELFEXT (dB)	PS ELFEXT (dB)	Return loss (dB)	ACR	PS ACR
8	5.3	72.1	70.7	57.2	54.9	31.8	66.9	65.6
10	5.9	70.3	68.6	55.4	53	37.7	64.4	62.7
16	7.6	65.5	64.0	52.2	49.6	33.4	57.9	56.8
20	8.9	62.1	60.8	51.0	48.1	31.9	53.2	51.9

25	9.9	61.1	59.9	50.0	47	29.9	51.2	50.0
31.25	11.1	63.8	60.7	48.5	46	30.5	53.1	50.1
62.5	15.9	53.8	52.6	43.6	41.4	26.3	37.9	36.9
100	20.4	55.5	53.0	37.4	34.1	27.4	35.2	33.6
250	33.7	45.1	42.7	26.2	24.5	17.5	11.6	9.2
550	52.7	29.6	29.0	15.6	13.9	15.2	-22.9	-23.4
650	60.2	24.0	23.6	8.2	5.2	15.3	-36.2	-36.5

1. DC Resistance: Maximum 0.3 Ohms.

D. Floor Boxes – Refer to Section 260533 – Raceway and Boxes for Electrical Systems.

2.4 PATCH PANELS

A. General:
1. The patch panel shall be suitable for mounting at the location shown on the drawings. Either wall or rack with the appropriate environmental housing to protect from physical damage and direct exposure to moisture of other corrosive elements.
2. Provide panel with quantity of ports as shown on the drawings. All ports shall be provided with connectors.

B. 100 Ohm UTP Patch Panels:
1. Provide modular patch panel with Belden Cat 6/6A rated connectors. The connectors shall be of the same rating as the terminating cable.
2. Keystone type patch panels are not acceptable.
3. The patch panel shall be either 1RU 24-port of 2RU 48-port as indicated on the contract documents and shall include 2 integrated patch cord cable managers and 2 rear cable management bars. Patch panels shall be Belden 10GXAngledPP482U for 48 port or 10GXAngledPP241U for 24 port panel.

C. Telephone Connecting Modules
1. The telephone connecting modules shall be 110 style blocks.
2. The unit shall have the capacity to terminate minimum 25 cable pairs each.
3. Block shall be fire retardant molded plastic.
4. Unit shall have horizontal index strip to secure and organize cables.
5. Unit shall accommodate 22 through 26 gauge wire.
6. Block shall be wall or rack mountable.
7. Block shall be provided with mounting bracket, labels and covers.
8. Provide block pair size as shown on the drawings.
9. Each block shall be labeled.
10. Blocks shall be minimum of the same rating as the terminating horizontal cable.
11. Provide all blocks with legs.

PART 3 - EXECUTION

3.1 EXAMINATION

A. Verify conduit, raceways, boxes, fittings and bodies are properly installed following Sections 260533 – Raceway and Boxes for Electrical Systems.

B. Verify grounding and bonding following Section 260526 – Grounding and Bonding for Electrical Systems and Section 271100 – Communications Equipment Room Fittings.

C. Verify supporting devices are properly installed following Section 260529 – Hangers and Supports for Electrical Systems.

D. Maintain temperature of between 65 degrees Fahrenheit and 78 degrees F and between 30 and 50 percent humidity in areas of voice and data system work, following Section 014000 – Quality Requirements.

3.2 INSTALLATION

A. Install work following drawings, manufacturer's instructions and approved submittal data. The number of cables per run, outlet configuration and other pertinent data will be included on the drawings.

B. All installation shall be done in conformance with TIA 568, latest edition, and BICSI standards. The Contractor shall ensure that the maximum pulling tensions of the specified distribution cables are not exceeded and cable bends maintain the proper radius during the placement of the facilities. Failure to follow the appropriate guidelines will require the Contractor to provide in a timely fashion the additional material and labor necessary to properly rectify the situation. This shall also apply to any and all damages sustained to the cables by the Contractor during the implementation.

C. The SCS installation should meet all applicable national and local codes pertaining to low voltage cable system installations.

D. The contractor will adhere to the installation schedule of the general contractor and should attend all construction meetings scheduled by the general contractor.

E. The contractor will be responsible for the cross connection of the horizontal cable runs to the backbone cable system. The connection to voice and data systems will be performed by the vendors installing and/or maintaining those systems. Coordinate all cross-connects with the owner prior to work.

F. The contractor will provide service loops (slack) for cables terminating in the main equipment room or the telecommunications closets. A 6 foot service loop will be provided above the access ceiling or cable trays unless specified otherwise. This will allow for future changes or expansion with having to install new cables.

G. The installation will include coordination, testing and problem resolution with the system vendors.

3.3 COPPER CABLE

A. Test all cable prior to installation. Upon failure to perform testing, the installer shall accept the cable as good and assume all liability for the replacement of the cable should it be found defective at a later date.

B. All conformance standards must be certified for multipair and individual cable runs.

C. Jacketing and insulation must satisfy the Underwriter's Laboratories (UL) listed fire rated cable insulation requirements in plenum areas.

D. Any pulling compound or lubricant used in cable installation must not deteriorate the conductor or the insulation. Provide 3M type WLC or an approved equal.

E. Copper cable runs shall not exceed 285 feet. All runs shall be continuous. No splicing is allowed.

F. The Contractor shall install copper cable with a minimum bend radius of six times the diameter of the cable.

G. Provide a 10 foot patch cable with RJ-45 connector for each work area outlet insert installed. Provide additional patch cables for the TR rooms as required on the contract drawings. The patch cable rating and connector shall match the horizontal cable/connector rating.

H. Install 10 feet of spare copper cable (service loop) in each closet and at work area prior to termination. Arrange slack cable on wall or above ceiling to structure. Provide velcro type tie wrap for cable support and organization.

I. Install 12 inches of spare copper cable in ceiling plenum prior to dropping down wall to outlet. Support slack to structure with J-Hook and Velcro ties. If there is no plenum, loop shall be located in box prior to termination. Provide box of sufficient size to accommodate spare cable, termination equipment if applicable and maintain bending radius.

J. Install 18" of spare copper cable coiled in box at all pay telephone locations. Cable shall be terminated by pay phone installer.

K. All horizontal cable shall be rated for plenum use.

L. Patch cables shall not cross one another vertically or horizontally when transitioning from cable management to the patch panel of from cable management to the network switch.

M. The maximum pulling tension for 4-pair 24 AWG horizontal UTP cables shall not exceed 25 lbf. The Contractor shall provide a tension meter during the pulling of all cables. If the meter shows that the tension has exceeded 25 lbf, the Contractor discard the cable and pull new cable.

N. All cables shall be installed continuously. No splices are acceptable.

3.4 DEVICES AND PATCH PANELS

A. The amount of untwisting in a pair when terminating to connecting hardware shall be no greater than 0.5 inches for category 5 cables and above. No greater than 1.0 inches for category 3 cables.

B. Cables should be connected with connecting hardware of the same category or higher. Also, included are patch cables and jumpers.

C. The connecting hardware used for copper cabling shall be installed to provide minimal signal impairment by preserving wire pair twists as closely as possible to the point of termination.

D. Provide 'decora' style wall plates if electrical is using 'decora' style receptacles. Otherwise, provide standard wall plates.

E. Coordinate wall plate color with architect. Color shall match electrical receptacle color.

F. Provide stainless steel or galvanized coverplate when mounted in mechanical, electrical, unfinished areas or corrosive environments.

G. The connecting hardware shall be installed to provide a well organized installation with cable management and termination practices.

H. Strip back only as much jacket as necessary to terminate the cable.

I. Avoid kinking or crimping the cable wire.

J. Patch panels shall be installed in a neat, well organized manner with optical fiber management and sound optical termination practices.

K. Using a proper punch down tool. Punch each termination down tight, right-up to the jacket. Keep the jacket as close to the connector sleeve as possible.

L. Maintain straight through polarity, do not split pairs.

M. Install devices only in electrical boxes which are clean and free from excess building materials, debris, etc.

N. Gang devices installed at one location together under one coverplate.

O. Align the tops of all group mounted devices. Install plumb and aligned in the plane of the wall.

P. Install devices in vertical position unless otherwise noted.

Q. Install blanks in all ports not terminated.

R. Mounting Heights:
1. Refer to contract documents.

3.5 COPPER CABLE ROUTES

A. The Contractor shall install copper cable route with a minimum bend radius of six times the diameter of the cable.

B. The Contractor shall conceal all horizontal distribution wiring either above accessible ceilings or in minimum 1" conduit where exposed. If it becomes necessary to use an alternative method, the Contractor shall obtain approval from the Engineer prior to the use of the alternate method.

3.6 LOW VOLTAGE CABLE ROUTING AND SUPPORT

A. General:
1. Refer to Division 27, Division 28, and the following.
2. All horizontal cable routed above the accessible ceiling shall be supported by Category 5 rated J-hooks or cable tray.
3. All main cable runs shall be above the accessible ceiling down main corridors or other pathways shown on the drawings. The cable shall turn 90 degrees from the main run to the drop location.
4. The cable shall be routed concealed above the ceiling with 12" of clear space above route whenever possible.
5. The contractor shall provide minimum 1" conduit for low voltage cables. Size conduit based on TIA 569, latest edition.
6. The cable routing shall meet the following minimum criteria:
   a. Maintain minimum separation of 6" from fluorescent fixtures.
   b. Maintain minimum separation of 12" from electrical conduit and cables rated 110 volts or more.
   c. Maintain minimum separation of 48" from motors and transformers.
   d. Maintain minimum clearance of 3’ above ceiling tiles.
   e. Conduit runs shall not exceed two 90 degree bends.
   f. All conduit located in the ceiling shall protrude 2 inches into the closet. Provide bushing on conduit end.

B. J-Hooks:
1. by the equipment manufacturer, whichever is less.

C. TESTING COPPER AND FIBER OPTICS

1. Tests under Section 270500 –Communications.

3.7 SITE QUALITY CONTROL, TESTING AND INSPECTION

A. Every cabling link in the installation shall be tested in accordance with the field test specifications defined in ANSI/TIA/EIA-58-B.2-1 “Transmission Performance Specifications for 4-pair Category 6 Cabling”.

B. The installed twisted-pair horizontal links shall be tested from the patch panel in the telecommunications room to the telecommunication wall outlet in the work area against the “Permanent Link” performance limits specification as defined in ANSI/TIA/EIA-58- B.2-1.

C. Trained technicians who have successfully attended an appropriate training program and have obtained a certificate as proof thereof shall execute the tests. Appropriate training programs include but are not limited to installation certification programs provided by BICSI or the ACP (Association of Cabling Professionals).

D. The test equipment shall comply with the accuracy requirements for level IV field testers as defined in ANSI/TIA/EIA-58-B.2-1. The tester including the appropriate interface adapter must meet the specified accuracy requirements. The accuracy requirements for the permanent link test configuration (baseline accuracy plus adapter contribution) are specified in Table B.2 of Annex B of ANSI/TIA/EIA-58-B.2-1. (Table B.3 in this document specifies the accuracy requirements for the Channel configuration.)

E. The test plug shall fall within the values specified in E.3.2.2 Modular test plug NEXT loss requirements of ANSI/TIA/EIA-58-B.2-1.

F. The tester shall be within the calibration period recommended by the vendor in order to achieve the vendor-specified measurement accuracy.

G. The tester interface adapters must be of high quality and the cable shall not show any twisting or kinking resulting from coiling and storing of the tester interface adapters. In order to deliver optimum accuracy, preference is given to a permanent link interface adapter for the tester that can be calibrated to extend the reference plane of the Return Loss measurement to the permanent link interface. The Cable Contractor shall provide proof that the interface has been calibrated within the period recommended by the vendor. To ensure that normal handling on the job does not cause measurable Return Loss Change, the adapter cord cable shall not be of twisted-pair construction.

H. One hundred percent of the installed cabling links must be tested and must pass the requirements of the standards in this section. Any failing link must be diagnosed and corrected. The corrective action shall be followed with a new test to prove that the corrected link meets the performance requirements. The final and passing result of the tests for all links shall be provided in the test results documentation in accordance with the Test Result Documentation as listed below.

3.8 SITE TESTING, INSPECTION AND ACCEPTANCE

A. The Pass or Fail condition for the link-under-test is determined by the results of the required individual tests. Any Fail or Fail* result yields a Fail for the link-under-test. In order to achieve an overall Pass condition, the results for each individual test parameter must Pass or Pass*.

B. A Pass or Fail result for each parameter is determined by comparing the measured values with the specified test limits for that parameter. The test result of a parameter shall be marked with an asterisk (*) when the result is closer to the test limit than the accuracy of the field tester. The field tester manufacturer must provide documentation as an aid to interpret results marked with asterisks.

C. A representative of the design team shall be invited to witness field testing. The representative shall be notified of the start date of the testing phase five business days before testing commences.

D. At the conclusion of field testing, at a time scheduled by the Owner's representative, the Owner's representative will select a random sample (up to 10%) of the installed links in each wiring closet. The Cable Contractor, under supervision of the Owner's representative, shall test these randomly selected links and the results are to be stored in accordance with the requirements in Test Result Documentation as listed below.

E. The results obtained shall be compared to the data originally provided by the Cable contractor. If any (one or more) of the sample test reports displays a fail or fail* result, the Cable Contractor shall resolve any conditions causing the failed test and under supervision of the Owner's representative shall repeat 100% of the testing and the cost shall be borne by the Cable Contractor.

3.9 PERFORMANCE TEST PARAMETERS

A. The test parameters for Category 6 are defined in TIA Category 6 standard, which refers to the ANSI/TIA/EIA-58-B.2 standard. The test of each link shall contain all of the following parameters as detailed below. In order to pass the test all measurements (at each frequency in the range from 1 MHz through 100 MHz) must meet or exceed the limit value determined in the above-mentioned standard.

1. Wire Map - Wire Map shall report Pass if the wiring of each wire-pair from end to end is determined to be correct. The Wire Map results shall include the continuity of the shield connection if present.
2. Length - The field tester shall be capable of measuring length of all pairs of a basic link or channel based on the propagation delay measurement and the average value for NVP (1). The physical length of the link shall be calculated using the pair with the shortest electrical delay. This length figure shall be reported and shall be used for making the Pass/Fail decision. The Pass/Fail criteria are based on the maximum length allowed for the Permanent Link configuration (90 meters - 295 feet) plus 10% to allow for the variation and uncertainty of NVP.
3. Insertion Loss (Attenuation) - Insertion Loss is a measure of signal loss in the permanent link or channel. The term “Attenuation” has been used to designate “Insertion Loss.” Insertion Loss shall be tested from 1 MHz through 250 MHz in maximum step size of 1 MHz. It is preferred to measure insertion loss at the same frequency intervals as NEXT Loss in order to provide a more accurate calculation of the Attenuation-to-Crosstalk ratio (ACR) parameter. Minimum test results documentation (summary results): Identify the worst wire pair (1 of 4 possible). The test results for the worst wire pair must show the

highest attenuation value measured (worst case), the frequency at which this worst case value occurs, and the test limit value at this frequency.

4. NEXT Loss - Pair-to-pair near-end crosstalk loss (abbreviated as NEXT Loss) shall be tested for each wire pair combination from each end of the link (a total of 12 pair combinations). This parameter is to be measured from 1 through 250 MHz. NEXT Loss measures the crosstalk disturbance on a wire pair at the end from which the disturbance signal is transmitted (near-end) on the disturbing pair. The maximum step size for NEXT Loss measurements shall not exceed the maximum step size defined in the standard as shown in Table 1, column 2. Minimum test results documentation (summary results): Identify the wire pair combination that exhibits the worst case NEXT margin (2) and the wire pair combination that exhibits the worst value of NEXT (worst case). NEXT is to be measured from each end of the link-under-test. These wire pair combinations must be identified for the tests performed from each end. Each reported case shall include the frequency at which it occurs as well as the test limit value at this frequency.
5. PSNEXT Loss - Power Sum NEXT Loss shall be evaluated and reported for each wire pair from both ends of the link under-test (a total of eight results). PSNEXT Loss captures the combined near-end crosstalk effect (statistical) on a wire pair when all other pairs actively transmit signals. Like NEXT this test parameter must be evaluated from 1 through 250 MHz and the step size may not exceed the maximum step size defined in the standard as shown in Table 1, column 2. Minimum test results documentation (summary results): Identify the wire pair that exhibits the worst-case margin and the wire pair that exhibits the worst value for PSNEXT. These wire pairs must be identified for the tests performed from each end. Each reported case shall include the frequency at which it occurs as well as the test limit value at this frequency.
6. ELFEXT Loss, pair-to-pair - Pair-to-pair FEXT Loss shall be measured for each wire-pair combination from both ends of the link under-test. FEXT Loss measures the crosstalk disturbance on a wire pair at the opposite end (far-end) from which the transmitter emits the disturbing signal on the disturbing pair. FEXT is measured to compute ELFEXT Loss that must be evaluated and reported in the test results. ELFEXT measures the relative strength of the far-end crosstalk disturbance relative to the attenuated signal that arrives at the end of the link. This test yields 24 wire pair combinations. ELFEXT is to be measured from 1 through 250 MHz and the maximum step size for FEXT Loss measurements shall not exceed the maximum step size defined in the standard as in Table 1, column 2. Minimum test results documentation (summary results): Identify the wire pair combination that exhibits the worst-case margin and the wire pair combination that exhibits the worst value for ELFEXT. These wire pairs must be identified for the tests performed from each end. Each reported case shall include the frequency at which it occurs as well as the test limit value at this frequency.
7. PSELFEXT Loss - Power Sum ELFEXT is a calculated parameter that combines the effect of the FEXT disturbance from three wire pairs on the fourth one. This test yields eight wire-pair combinations. Each wire-pair is evaluated from 1 through 250 MHz in frequency increments that do not exceed the maximum step size defined in the standard as shown in Table 1, column 2. Minimum test results documentation (summary results): Identify the wire pair that exhibits the worst pair combinations must be identified for the tests performed from each end. Each reported case shall include the frequency at which it occurs as well as the test limit value at this frequency.

8. Return Loss - Return Loss (RL) measures the total energy reflected on each wire pair. Return Loss is to be measured from both ends of the link-under-test for each wire pair. This parameter is also to be measured from 1 through 250 MHz in frequency increments that do not exceed the maximum step size defined in the standard as shown in Table 1, column 2. Minimum test results documentation (summary results): Identify the wire pair that exhibits the worst-case margin and the wire pair that exhibits the worst value for Return Loss. These wire pairs must be identified for the tests performed from each end. Each reported case shall include the frequency at which it occurs as well as the test limit value at this frequency.
9. ACR (Attenuation to crosstalk ratio) - This parameter is not demanded by the standard but may be required in order to obtain the premise wiring manufacturer's warranty. ACR provides an indication of bandwidth for the two wire-pair network applications. ACR is a computed parameter that is analogous to ELFEXT and expresses the signal to noise ratio for a two wire-pair system. This calculation yields 12 combinations - six from each end of the link. Minimum test results documentation (summary results): Identify the wire pair combination that exhibits the worst-case margin and the wire pair combination that exhibits the worst value for ACR. These wire pair combinations must be identified for the tests performed from each end. Each reported case shall include the frequency at which it occurs as well as the test limit value at this frequency.
10. PSACR - [This parameter is not required by the standard but may be required in order to obtain the premise wiring vendor's warranty]. The Power Sum version of ACR is based on PSNEXT and takes into account the combined NEXT disturbance of all adjacent wire pairs on each individual pair. This calculation yields eight combinations -one for each wire pair from both ends of the link. Minimum test results documentation (summary results): Identify the wire pair that exhibits the worst-case margin and the wire pair that exhibits the worst value for PSACR. These wire pairs must be identified for the tests performed from each end. Each reported case shall include the frequency at which it occurs as well as the test limit value at this frequency.
11. Propagation Delay - Propagation delay is the time required for the signal to travel from one of the link to the other. This measurement is to be performed for each of the four wire pairs. Minimum test results documentation (summary results): Identify the wire pair with the worst-case propagation delay. The report shall include the propagation delay value measured as well as the test limit value.
12. Delay Skew [as defined in TIA/EIA-58-B.1; Section 11.2.4.11] - This parameter shows the difference in propagation delay between the four wire pairs. The pair with the shortest propagation delay is the reference pair with a delay skew value of zero. Minimum test results documentation (summary results): Identify the wire pair with the worst-case propagation delay (the longest propagation delay). The report shall include the delay skew value measured as well as the test limit value.

3.10 TEST RESULT DOCUMENTATION

A. The test results information for each link shall be recorded in the memory of the field tester upon completion of the test.

B. The test results records saved by the tester shall be transferred into a Windows™-based database utility that allows for the maintenance, inspection and archiving of these test records. A guarantee must be made that the measurement results are transferred to the PC unaltered, i.e., “as saved in the tester” at the end of each test and that these results cannot be modified at a later time. Superior protection in this regard is offered by testers that transfer the numeric measurement data from the tester to the PC in a non-printable format.

C. The database for the completed job shall be stored and delivered on CD-ROM including the software tools required to view, inspect, and print any selection of test reports.

D. The test results shall be provided on CD-ROM listing the links that have been tested with the following summary information:

1. The identification of the link in accordance with the naming convention defined in the overall system documentation.
2. The overall Pass/Fail evaluation of the link-under-test including the NEXT Headroom (overall worst case) number.
3. The date and time the test results were saved in the memory of the tester.

E. General Information to be provided in the electronic data base with the test results information for each link:

1. The identification of the customer site as specified by the end-user.
2. The identification of the link in accordance with the naming convention defined in the overall system documentation.
3. The overall Pass/Fail evaluation of the link-under-test.
4. The name of the standard selected to execute the stored test results.
5. The cable type and the value of NVP used for length calculations.
6. The date and time the test results were saved in the memory of the tester.
7. The brand name, model and serial number of the tester.
8. The identification of the tester interface.
9. The revision of the tester software and the revision of the test standards database in the tester.
10. The test results information must contain information on each of the required test parameters.
11. The name of the person performing the test.

F. The detailed test results data to be provided in the electronic database for each tested link must contain the following information:

G. For each of the frequency-dependent test parameters, the value measured at every frequency during the test is stored. In this case, the PC-resident database program must be able to process the stored results to display and print a color graph of the measured parameters. The PC-resident software must also provide a summary numeric format in which some critical information is provided numerically as defined by the summary results (minimum numeric test results documentation) as outlined above for each of the test parameters.

1. Length: Identify the wire-pair with the shortest electrical length, the value of the length rounded to the nearest 0.1 m (1) and the test limit value.

2. Propagation delay: Identify the pair with the shortest propagation delay, the value measured in nanoseconds (ns) and the test limit value.
3. Delay Skew: Identify the pair with the largest value for delay skew, the value calculated in nanoseconds (ns) and the test limit value.
4. Attenuation: Minimum test results for the worst pair.
5. Return Loss: Minimum test results for the worst pair as measured from each end of the link.
6. NEXT, ELFEXT, ACR: Minimum test results documentation for the worst pair combination as measured from each end of the link.
7. PSNEXT, PSELFEXT, and PSACR: Minimum test results documentation for the worst pair as measured from each end of the link.

END OF SECTION 271500

SECTION 272100
DATA COMMS AND NETWORK EQUIPMENT

PART 1 - GENERAL

1.1 PROJECT SCOPE SUMMARY

A. Subject to the General and Special Conditions, this section shall specify…

B. Section Includes:

1. Core switch in MDF
2. Access Switch in IDF
3. Wireless Access Point (WAP)
4. Rack UPS
5. Integrated Service Router

C. The Contractor shall provide, install and test a complete network system of switch components. The Contractor shall be responsible for the compatibility of all equipment in the network and configuration of the equipment. The network shall consist of a 1000Base-FX fiber optic backbone and 10/100/1000 BASE-TX Ethernet to the workstation and peripheral equipment. All system components shall be VLAN tagging compatible (IEEE802.1Q).

1.2 DEFINITIONS

A. Definitions

B. Abbreviations

1.	ANSI	American National Standards Institute
2.	ATM	Asynchronous Transfer Mode
3.	EIA	Electronics Industries Alliance
4.	Gbps	Gigabits per second
5.	IEEE	Institute of Electrical and Electronic Engineers
6.	ISO	International Organization for Standardization
7.	Mbps	Megabits Per Second
8.	MIMO	Multiple-In and Multiple-Out
9.	Multi-path	The possible multiple routes of a single source of RF energy due to reflection, refraction, or diffraction.
10.	NEC	National Electrical Code
11.	NEMA	National Electrical Manufacturing Association
12.	RF	Radio Frequency: Signal generated by a radio transmitter and sent out through an antenna. The frequency of the transmission

is described in terms of the number of cycles per second or Hertz (Hz).

13. SFP Small Form-Factor Pluggable – Hot-pluggable transceiver used for both telecommunication and data communication applications. Comes in both copper and fiber.
14. SNMP Simple Network Management Protocol
15. TIA Telecommunications Industry Association
16. TR Telecommunications Room
17. UL Underwriter's Laboratories
18. VoIP Voice over Internet Protocol
19. WAP Wireless Application Protocol
20. WPA/WPA2 WiFi Protected Access / WiFi Protected Access II – IEEE 802.11i-2004

1.3 REFERENCES

A. Section 01

B. Section 270000: Communications

C. Section 270526: Telecommunication Grounding and Bonding

D. Section 270528: Interior Communications Pathways

E. Section 270543: Exterior Communication Pathways

F. Section 270553: Testing, Administration, Identification

G. Section 271100: Communication Cabinet and Equipment Rooms

H. Section 271300: Backbone and Riser Media Infrastructure

I. Section 271500: Horizontal Media Infrastructure

J. Section 272100: Data Communication and Network Equipment

K. Section 274100: Audio Video System

L. Section 280500: Electronic Safety and Security

M. Section 281300: Access Control System (ACS)

N. Section 282300: Digital Video Surveillance Systems (DVSS)

O. Telecommunications Industry Association (TIA) 568B- Commercial Building Telecommunications Cabling Standard.

P. National Electrical Manufacturers Association (NEMA).

Q. American Society for Testing Materials (ASTM).

R. National Electric Code (NEC).

S. Institute of Electrical and Electronic Engineers (IEEE).

T. International Standards Organization/International Electromechanical Commission (ISO/IEC) DIS 11801, latest edition.

U. Underwriters Laboratories (UL) Cable Certification and Follow Up Program.

V. Occupational Safety and Health Administration (OSHA) 29 CFR Part 1910, Permit-Required Confined Spaces for General Industry; Final Rule.Drawings and general provisions of the Contract, including General and Supplementary Conditions, and Division 01 General Requirements Specification Sections, apply to this Section.

1.4 COORDINATION

A. Refer to General or Special Conditions.

B. HCCS for configuration and integration into the overall LAN

1.5 QUALITY ASSURANCE

A. Assure that the "as installed" system is correct and complete per construction documents: including engineering drawings, manuals, and operational procedures in such a manner as to support maintenance and future expansion of the system.

B. Owner/Architect/Engineer retains the right to access and inspect all work during the entire duration of the project and any items that do not adhere to the standards, reference, contract, bid, or project documents will be corrected immediately at the expense of the contractor.

C. UL Compliance: Provide products that are UL-classified and labeled.

D. Installer Qualifications

1. Installer shall have a minimum certification of Cisco CCNA.
2. Knowledge of NEC standards.
3. Knowledge of EIA/TIA standards.
4. Five (5) years experience in the installation of local and wide area network hardware and software including hubs, routers, switchers, terminating and testing.
5. Five (5) years experience in the installation and configuration of 10Base Ethernet, 100Base Ethernet, FDDI, ISDN, ATM and Token Ring networks.

6. Five (5) references for projects of equivalent scope, type and complexity of work completed within the last five (5) years. The Contractor shall submit as proof, supporting documents and the names, addresses and telephone numbers of the operating personnel who can be contacted regarding the installation system.
7. Must be certified by the equipment manufacturers to install and configure the specified products.

E. Install products only by qualified technicians.

F. Provide all electronic equipment with the UL label when applicable.

G. Comply in every way with the requirements of local and City laws and ordinances, the National Board of Fire Underwriters, and the National Electrical Code. Anything in the plans or specifications that does not strictly comply with the above laws, ordinances, and rules must be referred to the attention of the Engineer for a decision before proceeding. No change in the plans or specifications shall be made without full consent in writing of the Engineer.

H. Contractor is responsible to ensure equipment has the correct modules, quantities, and firmware updates for a complete and functional system. If drawings or specifications are not accurate, contractor shall notify owner of discrepancy prior to bid. Owner will not be responsible to pay for any additional equipment that contractor left out to make the system completely functional.

1.6 WARRANTY

A. Provide in accordance with Division 01.

B. Provide a three (3) year warranty on all active network products and installation.

C. Provide the Owner with on-line telephone support for the network active products and configuration for a period of two (2) years.

D. The Contractor shall bear the burden to replace or repair any such defective products during the three (3) year period at his cost including labor and materials.

PART 2 - PRODUCTS

2.1 CORE NETWORK SWITCH

The standard configuration for the CORE switch is shown in the table below.

CORE - TYPE 1	
PART NUMBER	DESCRIPTION
C9606R Chassis	6 Slot Chassis, 4 Line Card Slots, 2 Sup Engine Slots, 4 PS Bays
C9606R	Cisco Catalyst 9600 Series Supervisor Engine 1
C9606R	Cisco Catalyst 9600X Series Supervisor Engine 2
C9600-LC-40YL4CD	Combo Line Card, 40 ports 1/10/25GE SFP and 2 ports 40/100GE QSFP Uplinks
C9600-LC-24C	Cisco Catalyst 9600 Series 24-port 40GE/100GE line card
C9600-LC-48YL	Cisco Catalyst 9600 Series 48-port 25GE/10GE1 SFP28 line card
C9600-PWR-3KWAC	3000W Power Supply, Qty=4
CAB-C19-CBN	Cabinet Jumper 16A, 250VAC, Qty=4
C9606-FAN	Fan Tray, 1621 BTU (max)
C9606-RACK-KIT	Cisco Catalyst 9600 Series 6 slot chassis Rack Mount
C9600-DNA-A-5Y	C9600 Cisco DNA Advantage Software subscription, 5 Year License

2.2 48 PORT ACCESS NETWORK SWITCH TYPE 1

A. Usage: Data Center Server Cabinets. 2 per cabinet

48 PORT ACCESS - TYPE 1 (10GE)	
PART NUMBER	DESCRIPTION
C9300-48P-E	Catalyst 9300 48-port PoE+, Network Essentials
C9300-NW-E-48	C9300 Network Essentials, 48-port license
PWR-C1-715WAC-P	715W AC 80+ Primary Platinum Rated Power Supply
PWR-C1-715WAC-P	715W AC 80+ Secondary Platinum Rated Power Supply
CAB-TA-NA	North America AC Type A Power Cable x2
C9300-NM-8X	Catalyst 9300 8 x 10GE Network Module
NETWORK-PNP-LIC	Network Plug-n-Play Connect for zero-touch device deployment
S9300UK9-1612	Cisco Catalyst 9300 XE 16.12 UNIVERSAL

C9300-STACK-NONE	No Stack Cable Selected
C9300-SPWR-NONE	No Stack Power Cable Selected
C9300-DNA-E-48	C9300 DNA Essentials, 48-Port Term Licenses
C9300-DNA-E-48-3Y	C9300 DNA Essentials, 48-port - 3 Year Term License

2.3 48 PORT ACCESS NETWORK SWITCH TYPE 2

A. Usage: Work area switch

48 PORT ACCESS - TYPE 2 (1GE)	
PART NUMBER	DESCRIPTION
C9300-48P-E	Catalyst 9300 48-port PoE+, Network Essentials
C9300-NW-E-48	C9300 Network Essentials, 48-port license
PWR-C1-715WAC-P	715W AC 80+ Primary Platinum Rated Power Supply
PWR-C1-715WAC-P	715W AC 80+ Secondary Platinum Rated Power Supply
CAB-TA-NA	North America AC Type A Power Cable x2
C9300-NM-4G	Catalyst 9300 4 x 1GE Network Module
NETWORK-PNP-LIC	Network Plug-n-Play Connect for zero-touch device deployment
S9300UK9-1612	Cisco Catalyst 9300 XE 16.12 UNIVERSAL
C9300-STACK-NONE	No Stack Cable Selected
C9300-SPWR-NONE	No Stack Power Cable Selected
C9300-DNA-E-48	C9300 DNA Essentials, 48-Port Term Licenses
C9300-DNA-E-48-3Y	C9300 DNA Essentials, 48-port - 3 Year Term License

2.4 24 PORT ACCESS NETWORK SWITCH TYPE 1

A. Usage: Data Center Server Cabinets. 2 per cabinet

24 PORT ACCESS - TYPE 1 (10GE)	
PART NUMBER	DESCRIPTION
C9300-24P-E	Catalyst 9300 24-port PoE+, Network Essentials
C9300-NW-E-24	C9300 Network Essentials, 24-port license
PWR-C1-715WAC-P	715W AC 80+ Primary Platinum Rated Power Supply
PWR-C1-715WAC-P	715W AC 80+ Secondary Platinum Rated Power Supply

CAB-TA-NA	North America AC Type A Power Cable x2
C9300-NM-8X	Catalyst 9300 8 x 10GE Network Module
NETWORK-PNP-LIC	Network Plug-n-Play Connect for zero-touch device deployment
C9300-STACK-NONE	No Stack Cable Selected
C9300-SPWR-NONE	No Stack Power Cable Selected
C9300-SPS-NONE	No Secondary Power Supply Selected
PWR-C1-BLANK	Config 1 Power Supply Blank
C9300-DNA-E-24	C9300 DNA Essentials, 24-Port Term Licenses
C9300-DNA-E-24-3Y	C9300 DNA Essentials, 24-Port, 3 Year Term License (3 years)
S9300UK9-1612	Cisco Catalyst 9300 XE 16.12 UNIVERSAL

2.5 24 PORT ACCESS NETWORK SWITCH TYPE 2

A. Usage: Work area switch

24 PORT ACCESS - TYPE 1 (1GE)	
PART NUMBER	DESCRIPTION
C9300-24P-E	Catalyst 9300 24-port PoE+, Network Essentials
C9300-NW-E-24	C9300 Network Essentials, 24-port license
PWR-C1-715WAC-P	715W AC 80+ Primary Platinum Rated Power Supply
PWR-C1-715WAC-P	715W AC 80+ Secondary Platinum Rated Power Supply
CAB-TA-NA	North America AC Type A Power Cable x2
C9300-NM-4G	Catalyst 9300 4 x 1GE Network Module
NETWORK-PNP-LIC	Network Plug-n-Play Connect for zero-touch device deployment
C9300-STACK-NONE	No Stack Cable Selected
C9300-SPWR-NONE	No Stack Power Cable Selected
C9300-SPS-NONE	No Secondary Power Supply Selected
PWR-C1-BLANK	Config 1 Power Supply Blank
C9300-DNA-E-24	C9300 DNA Essentials, 24-Port Term Licenses
C9300-DNA-E-24-3Y	C9300 DNA Essentials, 24-Port, 3 Year Term License
S9300UK9-1612	Cisco Catalyst 9300 XE 16.12 UNIVERSAL

2.6 WIRELESS ACCESS POINT (WAP)

A. Provide where shown on drawings

B. Provide 2 CAT 6A cables for each WAP

C. Compliance: 802.11 a,b,g,n,ac,ax

D. Mounting brackets.

E. Provide indoor unit for building interior, outdoor unit for building exterior.

F. Cisco/Meraki MR52 or owner approved equal.

G. Provide mobility controller in MDF if not provided by owner. Contractor to verify exact requirements.

2.7 UNINTERRUPTABLE POWER SUPPLY (UPS)

A. Project is providing Room UPS. Reference Division 26.

2.8 Power Distribution Unit (PDU)

A. Reference 271100

2.10 INTEGRATED SERVICE ROUTER

A. Cisco ONE ISR 4431 (4GE,3NIM,8G FLASH,4GDRAM,IPB)

B. SNTC-8X5XNBD C1 ISR 4431 (4GE,3NIM,8G FLASH)

C. IP Base License for Cisco ISR 4400 Series

D. AC Power Supply for Cisco ISR 4430

E. AC Power Cord (North America), C13, NEMA 5-15P, 2.1m

F. 8G eUSB Flash Memory for Cisco ISR 4430

G. Cover for empty 2nd Power Supply slot on Cisco ISR 4430

H. 2G DRAM (1 DIMM) for Cisco ISR 4400 Data Plane

I. 4G DRAM (1 x 4G) for Cisco ISR 4400

J. 64-channel DSP module

K. Cisco ONE Advanced UC Perpetual License ISR 4400

L. SWSS UPGRADES C1 Advanced Perpetual Lic ISR 4400

M. Unified Communication License for Cisco ISR 4400 Series

N. SRST-25 Seat License (CME uses CUCME Phone License ONLY)

O. Unifed Border Element Enterprise License – 25 sessions

P. Tracker PID v01 Adv Perpetual ISR4400S - no delivery

Q. Cisco ISR 4400 Series IOS XE Universal

R. Cisco Survivable Remote Site Telephony (SRST) License

S. SRST-100 Seat License (CME uses CUCME Phone License ONLY)

T. 2 port Multfex Trunk Voice/Clear-channel Data T1/E1 Module

U. 32-channel DSP module

V. 4-port Network Interface Module - FXO (Universal)

W. 4-Port Network Interface Module - FXS, FXS-E and DID

2.11 MANUFACTURERS

A. Cisco

B. Cisco/Meraki

C. APC

PART 3 - EXECUTION

3.1 PRODUCT HANDLING

A. The Contractor shall be responsible for any and all loss or damage in the shipment and delivery of all material until transfer of title.

3.2 PREPARATION

A. Heating, ventilation, and air conditioning sensors and control equipment must maintain the room temperature between 64° F and 87° F. The relative humidity must be 20% to 80%.

3.3 INSTALLATION

A. Install components in accordance with contract drawings, manufacturer's instructions and approved submittal data.

B. System installation and construction methods shall conform to the requirements of the Federal Communications Commission.

C. The Contractor shall install all system components including furnished equipment, and appurtenances in accordance with the manufacturer's instructions, and adjustments required for a complete and operable system.

D. Grounding shall be installed as necessary to preclude ground loops, noise, and surges from adversely affecting system operation.

E. The Owner Representative shall perform final configuration of the network equipment. This includes, but is not limited to: VLAN configuration, IP addressing schemas, final port assignments, and trunking/bonding configurations. Installation contractor shall ensure that the proper documentation is provided to assist in the final system configuration.

3.4 HARDWARE INSTALLATION

A. The Contractor shall obtain written permission from the Owner's representative (Engineer) before proceeding with any work which requires cutting into or through any part of the building structures such as, but not limited to, girders, beams, concrete, carpeted or tiled floors, partitions or ceilings. The Contractor shall also consult with the Owner's representative before cutting into or through any part of the building structures where fireproofing or moisture proofing could be impaired.

B. The Contractor shall take all steps necessary to ensure that all public areas remain clear or are properly marked during installation or maintenance.

C. The Contractor shall develop a detailed network map to be utilized as a road map during the implementation of the LAN. This map shall show all segments, all interconnects between segments and all active network devices. This network map shall not include the individual nodes interconnected to each concentrator, but will have the modules, interfaces, protocols, addresses and other identifying features for each concentrator and other active device.

D. The Contractor shall also develop a Cable Plant interconnectivity chart showing all fiber patch panels and individual identifiers for each fiber associated with the interconnectivity of each network device.

E. Prior to installing Wireless Access Points, conduct and document an RF site survey to determine the maximum operating range between an AP (fixed location) and mobile stations for a specified transmit power level. Survey shall also identify holes of coverage due to multi-path, interference sources, and interference from other wireless installations.

F. The contractor shall place materials only in those locations that have been previously approved. The Owner's representative Engineer shall approve any other locations, in writing.

3.5 SYSTEM STARTUP

A. The Contractor shall not apply power to the system until after:

1. System and components have been installed and inspected in accordance with the manufacturer's installation instructions.
2. A visual inspection of the system components has been conducted to ensure that defective equipment items have not been installed and that there are no loose connections.
3. System wiring has been tested and verified as correctly connected as indicated.
4. All system grounding and transient protection systems have been verified as properly installed and connected, as indicated.
5. The Owner's representative Engineer and the IT Representative have approved the installation.

B. Satisfaction of the above requirements shall not relieve the contractor of responsibility for incorrect installations, defective equipment items, or collateral damage as a result of contractor's deficient work/defective equipment.

3.6 ACCEPTANCE TESTING

A. The contractor shall develop and execute an onsite acceptance-testing program.

B. The plan shall address all requirements identified in this specification and test all contractor supplied cabling and hardware components. The plan shall follow accepted industry testing practices and have a method of independent verification described.

C. Any specified item that does not satisfy the requirements of this specification shall be replaced, upgraded, or added by the contractor as necessary to correct the noted deficiencies. After correction of a noted deficiency, re-testing shall be performed to verify the effectiveness of the corrective action.

3.7 IDENTIFIERS, LABELS AND LABELING SYSTEM

A. All Identification and Labeling shall follow Specification 270553.

END OF SECTION 272100

SECTION 274100
AUDIO VIDEO SYSTEM

PART 1 - GENERAL

1.1 SCOPE SUMMARY

A. This section includes Specifications for Audio Video System (AVS) field devices, and system integration and programming as required by Owner.

B. Work under this contract shall include the furnishing of materials, labor, tools, transportation services, etc., necessary to complete the installation of the audio/video systems and their related systems.

C. These Specifications may include components that are not required. Use drawings to determine the quantities and parts to be installed. Include in the original bid, all equipment, software, cabling, connectors, etc., whether specified here or not, such that said bid fulfills the intent of these Specifications and renders these systems functional and fully operational.

D. Contractor shall provide all required licenses.

1. The Contractor shall be experienced in installation of similar or larger size and scope within the last three (3) years.
2. The Contractor will have at least one member of the Project Management team CTS certified.
3. Capabilities: The Contractor shall furnish, at the request of the Owner and to the satisfaction of the Owner, General Contractor and Consultant, information demonstrating that the Contractor has:
    a. Satisfactory work in similar completed installations.
    b. Adequate physical plant and staff to accomplish the work described herein.
    c. Adequate financial condition for the commitments of the project.
4. Product Dealership: If the Contractor is not an Authorized Dealer or franchised supplier for the manufacturer(s) of significant items in the audio system, the Contractor shall make provisions for the warranty repair and maintenance of that equipment through subcontracting arrangements with an Authorized Dealer or franchised supplier. This subcontractor arrangement shall be described on the Identification of Proposed Subcontractors Form and is subject to approval by the Owner, General Contractor, Architect and Consultant.

E. Related Specification Sections:

1. Section 01
2. Section 27 00 00 - Communications
3. Section 27 05 26 - Telecommunication Grounding and Bonding
4. Section 27 05 28 - Interior Communication Pathways

5. Section 27 05 43 - Exterior Communication Pathways
6. Section 27 05 53 - Testing Administration Identification
7. Section 27 11 00 - Communication Cabinets and Equipment Rooms
8. Section 27 13 00 - Backbone and Riser Media Infrastructure
9. Section 27 15 00 - Horizontal Media Infrastructure
10. Section 27 21 00 - Data Communication Network Equipment
11. Section 24 41 00 - Audio Video Systems
12. Section 28 13 00 - Access Control System
13. Section 28 23 00 - Digital Video Management System

F. References:

Section 270000 in its entirety shall be included as part of this specification.

1.2 DEFINITIONS

A. Definitions

1. ARCHITECT – FSGROUP ARCHITECTS
2. CONTRACTOR - TBD
3. CONSULTANT – PGA ENGINEERS
4. OWNER – FORT BEND COUNTY

B. Abbreviations

1.	ADA	Americans With Disabilities Act
2.	AEC	Auto Echo Cancelation.
3.	AFF	Above Finished Floor
4.	ANSI	American National Standards Institute
5.	AVCS	Audio Video Control System
6.	AVI	Audio Visual Integrator
7.	AVLAN	Audio Visual Local Area Network
8.	AVO	Audio Visual Outlet
9.	BLAN	Business Local Area Network
10.	CCTV	Closed Circuit Television
11.	DANTE	Digital Audio Network Through Ethernet
12.	DSP	Digital Sound Processor
13.	DTO	Data Terminal Outlet
14.	EDID	Extended Display Identification Data
15.	EIA	Electronics Industries Alliance
16.	FPD	Flat Panel Display
17.	HDBT	HDBaseT (Video Standard)
18.	HDCP	High-bandwidth Digital Content Protection
19.	HDMI	High-Definition Multimedia Interface
20.	IDF	Intermediate Distribution Frame
21.	IEEE	Institute of Electrical and Electronic Engineers
22.	ISO	International Organization for Standardization

23. LAN Local Area Network
24. Multi-path The possible multiple routes of a single source of RF energy due to reflection, refraction, or diffraction.
25. NEC National Electrical Code
26. NEMA National Electrical Manufacturing Association
27. POE Power Over Ethernet
28. RU Rack Unit (1.75”) of vertical space in an AV Rack
29. UL Underwriters Laboratories American National Standards Institute:
30. UPS Uninterruptible Power Supply
31. VOIP Voice over Internet Protocol.

C. Project Record Documents

1. O&M Manual -This manual shall contain detailed instructions on how to perform regular and preventive maintenance on all components of the AVS that can be performed by Owner's staff. One hard copy and one reproducible/electronic copy shall be provided. Manual shall include:
    a. Description of unit and component parts, including complete nomenclature and commercial number of all replaceable parts.
    b. Operating procedures: Include start-up; break-in; routine and normal operating instruction; regulation, control, stopping, shutdown and emergency instructions; and special operating instructions as applicable.
    c. Maintenance procedures: Include routine operations; guide to trouble shooting; servicing; description of sequence of operation; as-installed control diagrams; as installed color-coded piping and wiring diagrams; and a list of spare parts and recommended quantities to be maintained in storage on-site.
    d. Include trouble-shooting guide for repairs that can be performed by Owner's staff.
    e. Include manufacturer's product data with each sheet annotated to clearly identify data applicable to installation and delete references to inapplicable information.
    f. Supplement product data with drawings as necessary to clearly illustrate relations of component parts of equipment and systems.
    g. Include copy of each manufacturer's warranty and give information sheet for proper procedures in event of failure and instances that may affect validity of warranties.
2. As-built documentation. Notes shall be kept during initial installation and shall be made a permanent part of the installation manual pages as required. Provide Owner with a hard copy set of drawings and an electronic file showing any modifications or clarifications not present on original Contract Drawings including equipment field wiring diagrams, electrical circuitry and service schematics.
3. Contractor shall also deliver to Owner copies of all licenses, registrations, documentation, disks and other media as may have been included with those commercially available software packages provided with system. In addition, Contractor shall ensure that all licenses, registrations and warranties have been transferred to Owner prior to final software turnover.

1.3 COORDINATION

A. Refer to General or Special Conditions.

B. Refer to Division 26, Electrical Work

C. Refer to Division 27, Telecommunications

D. Refer to Division 28 (Electronic Safety and Security)

1.4 QUALITY ASSURANCE

A. Contractor Qualifications:

1. The contractor must be certified by the manufacturer of the products to be installed adhere to the engineering, installation and testing procedures, and utilize the authorized manufacturer components and distribution channels in provisioning this Project. Submit manufacturer certification as part of Submittals 1.4 above.
2. All members of the installation team must be certified by the manufacturer(s) as having completed the necessary training to complete their part of the installation.
3. Contractor shall provide five references for projects of approved equivalent scope, type and complexity of work completed within the last five years.

B. Equipment and materials supplied shall be a standard product of manufacturers regularly engaged in the manufacture and installation of an AVS and shall be the manufacturer's latest standard design. Items of the same classification shall be identical. This requirement includes equipment, modules, assemblies, parts, and components. Electrically powered equipment shall be UL approved. Electronic equipment shall meet the requirements of CFR 47 Part 15.

C. All hardware, software, firmware, and/or operating system requirements given are the minimum requirements. The Contractor's product shall meet or exceed these requirements. The product selected shall meet the operational, functional, and performance requirements specified herein. Additionally, due to the rapid advancement and antiquation of technology related products, the supplied product shall be the “contemporary technical equivalent” of that specified. “Contemporary technical equivalent” shall be based on a comparison of technology at the time of publication of specification to the technology at the time of the first product submittal. Final product approval is at the sole discretion of the Salvation Army or Owners Representative.

D. Assure that the, "as installed" system is correct and complete per construction documents: including engineering drawings, manuals, and operational procedures in such a manner as to support maintenance and future expansion of the system.

E. Owner/Architect/Engineer retains the right to access and inspect all work during the entire duration of the project and any items that do not adhere to the standards, reference, contract, bid, or project documents will be corrected immediately at the expense of the contractor.

F. UL Compliance: Provide products that are UL-classified and labeled.

1.5 TRAINING

A. Training: The Contractor shall provide one technician with thorough knowledge of the installed system for no less than 4 hours of user training. It shall include basic room operation, system care, and troubleshooting as a minimum requirement.

B. First Major Use: The Contractor shall provide one technician with thorough knowledge of the installed system for first major uses of the completed system as determined by the Consultant.

1.6 SCOPE OF WORK

A. The Contractor shall provide Audiovisual System(s) compatible with the Owner's communications systems (i.e. telephone, video, and computer systems) and operations.

B. The Contractor shall provide equipment that, where required, shall conform to the applicable requirements of the Underwriters Laboratories, Inc., local codes, the National Electrical Code and any other governing codes. Such items shall bear a label or mark indicating their conformance to the above requirements.

C. The Contractor shall provide complete and operational system(s) configured and installed for user-friendly operation and low maintenance. Provide for reprogramming of the remote control software two (2) times, as directed by the Owner or Consultant, before Final Acceptance. Provide for two (2) level adjustments of the Audio System(s), as directed by the Owner or Consultant, before Final Acceptance. On-site factory technical support shall be provided, if necessary, to assure performance.

D. The Contractor shall restore all finish hardware to original condition including painting, ceiling modifications, and attachments as specified in Division 09 Finishes.

E. Installation work shall be in compliance with all applicable standards and all governing codes and regulations of the authorities having jurisdiction and the Contract Documents.

F. The Contractor shall validate exact location and installation of the equipment, power, conduit, and raceway systems.

G. All software affiliated with the equipment, including but not limited to, the audio DSP, Control System, etc. is the property of the Owner and will be provided for archival purposes at project acceptance.

H. The Contractor shall supply all control software, programming service codes, programming notes, files interactive source codes, all media and associated software, touch panel design, all passwords, licenses, dangles and "keys" or other associated control or programming items at no additional cost to the Owner at commissioning.

I. If utilizing / integrating existing audio DSP and/or Control Systems into the project is necessary for a functional system, it will be the responsibility of the contractor to modify the existing code / DSP files.

PART 2 - PRODUCTS

2.1 ALTERNATE ACCEPTABLE PRODUCTS

A. Alternate Manufacturers: Products manufactured by the listed Alternate Acceptable Manufacturers for each category are acceptable as follows:

1. The video, audio, and control performances of the alternate product meet or exceed the performances of the ‘basis of design’ product.
2. The functionality and features of the alternate product meets or exceeds the functionality of the ‘basis of design’ product.
3. The number and type of inputs and outputs of the alternate product meets or exceeds the required number and type as shown on the drawings.
4. If space is critical, the size of the alternate product does not exceed the size of the ‘basis of design’ product.
5. The color of the alternate product meets the requirements of the project.

B. Acceptance of Alternate Product: The final acceptance of the alternate product is the sole discretion of the Consult and/or Owner.

1. Contractor shall submit manufacturer’s data or spec sheet to Consultant for final approval of any alternate products.

2.2 VIDEO ENDPOINTS

A. TRANSMITTER

1. Basis of Design: Crestron DM-TX-4KZ-100-C-1G-B-T
   a. HDMI Inputs: 1
   b. HDBaseT Outputs: 1
   c. RS-232 Ports: 1
   d. IR Ports: 1
2. Approved Substitute
   a. Extron

B. RECEIVER

1. Basis of Design: Crestron DM-RMC-4KZ-SCALER-C
   a. HDBaseT Inputs: 1
   b. HDMI Inputs: 1
   c. HDMI Outputs: 1
   d. Lan Port: 1
   e. Balanced Stereo Audio Outputs: 1
   f. Rs-232 Ports: 1`
   g. IR Ports: 1
   h. Relay Ports: 2

2. Approved Substitute
    a. Extron

2.3 FLAT PANEL DISPLAY

A. LED DISPLAY - TYPE 1

1. Basis of Design: LG: 55UH5J-H
    a. Type: 55" LED Display
    b. Aspect Ratio: 16:9
    c. Native Resolution: 3840 x 2160 (UHD)
    d. HDMI Inputs: 3
    e. LAN Port: 1
    f. RS-232 Ports: 1
2. Approved Substitute
    a. Panasonic
    b. Planar
    c. NEC

B. LED DISPLAY - TYPE 2

1. Basis of Design: LG: 65UH5J-H
    a. Type: 65" LED Display
    b. Aspect Ratio: 16:9
    c. Native Resolution: 3840 x 2160 (UHD)
    d. HDMI Inputs: 3
    e. LAN Port: 1
    f. RS-232 Ports: 1
2. Approved Substitute
    a. Panasonic
    b. Planar
    c. NEC

C. LED DISPLAY - TYPE 3

1. Basis of Design: LG: 75UL3J-E
    a. Type: 75" LED Display
    b. Aspect Ratio: 16:9
    c. Native Resolution: 3840 x 2160 (UHD)
    d. HDMI Inputs: 3
    e. LAN Port: 1
    f. RS-232 Ports: 1
2. Approved Substitute
    a. Panasonic
    b. Planar
    c. NEC

D. LED DISPLAY - TYPE 4

1. Basis of Design: LG: 86UL3J-E
    a. Type: 86" LED Display
    b. Aspect Ratio: 16:9
    c. Native Resolution: 3840 x 2160 (UHD)
    d. HDMI Inputs: 3
    e. LAN Port: 1
    f. RS-232 Ports: 1
2. Approved Substitute
    a. Panasonic
    b. Planar
    c. NEC

2.4 VIDEO CONFERENCING

A. ALL IN ONE VIDEO CONFERENCING BAR

1. Basis of Design: LOGITECH RALLY BAR or approved equal.
    a. Camera: Integrated 4K PTZ
    b. Microphones: Integrated Beam-Forming array.
    c. Content Input: HDMI
    d. Conferencing Solution: Microsoft Teams, ZOOM, etc.

B. VIDEO CONFERENCING BAR TOUCH PANEL or approved equal.

1. Basis of Design: LOGITECH TAP
    a. Power: POE
    b. Content Input: HDMI
    c. Conferencing Solution: Microsoft Teams, Zoom, etc.

2.5 MICROPHONES

A. Gooseneck/Podium

1. Basis of Design: Shure Microflex Mx418d/C
    a. Element: Condenser
    b. Pattern: Cardioid
    c. Length: 18"
    d. Mount: Furnish with Standard Mount Kit.
    e. Color: By Owner (TBD)
2. Approved Substitute
    a. AKG
    b. Audio Technica
    c. Clock Audio
    d. Electro-Voice

e. Neumann.
f. Sennheiser.

B. Wireless.

1. Basis of Design: Shure Microflex Series.
   a. MXWAPT8 - 4-channel Wireless Access Point
      1) Quantity: 2
   b. MXWNCS4 Port Networked Charging Station
      1) Quantity: 2
   c. MXW1 – BODY PACK – ***Include WL185 lavalier Microphone.***
      1) Quantity: 4
   d. MXW2/SM58 – Handheld Microphone
      1) Quantity: 4

2.6 LOUDSPEAKERS

A. 70V Ceiling Speaker – TYPE 1

1. Basis of Design: JBL Control 26CT
   a. Driver: Two; 6.5" Low with A 3/4" Hi
   b. Freq. Range: 75 Hz – 20 kHz
   c. Power Handling: 150W Program, 75 Pink noise.
   d. Mount: Furnish with standard mount kit.
   e. Color: By Owner (TBD)
2. Approved Substitute
   a. SoundTube
   b. Tannoy

B. 70V Pendant Speaker – TYPE 2

1. Basis of Design: JBL Control 64 P/T
   a. Driver: Two; 6.5" Low with A 3/4" Hi
   b. Freq. Range: 75 Hz – 20 kHz
   c. Power Handling: 150W Program, 75 Pink noise.
   d. Mount: Furnish with standard mount kit.
   e. Color: By Owner (TBD)
2. Approved Substitute
   a. SoundTube
   b. Tannoy

2.7 AMPLIFIERS

A. 70V AMPLIFIER <=200W

1. Basis of Design: QSC SPA2-200
    a. Channels: One, Or Two Channels Bridged.
    b. Minimum Power: 100 Watts Per Channel Per 70.7- Volt Load
    c. Minimum Headroom: 20% Of Total
2. Approved Substitute
    a. Crown
    b. Extron
    c. Lab Gruppen

B. 70V AMPLIFIER >=300W

1. Basis of Design: QSC CX602V
    a. Channels: One, Or Two Channels Bridged.
    b. Minimum Power: 100 Watts Per Channel Per 70.7- Volt Load
    c. Minimum Headroom: 20% Of Total
2. Approved Substitute
    a. Crown
    b. Extron
    c. Lab Gruppen

2.8 DIGITAL SIGNAL PROCESSOR

A. SELF CONTAINED UNIT

1. Basis of Design: QSC 110F
    a. Microphone / Line Level Inputs: 8 Channels
    b. Line Level Outputs: 8 Channels
2. Approved Substitute
    a. Biamp
    b. BSS
    c. Clear One

2.9 VIDEO CONFERENCING CAMERA

A. PTZ CONFERENCE CAMERAS

1. Basis of Design: QSC NC Series
    a. NC-12x80: 12x optical zoom, 80° horizontal field of view
    b. NC-20x60: 20x optical zoom, 60° horizontal field of view

2.10 VIDEO CONFERENCING BRIDGE

A. I/O-USB Bridge

1. Basis of Design: QSC I/O-USB Bridge
   a. Driverless USB 2.0 Connection
   b. Built for BYOD (plug and play)
   c. Resolutions up to 1080p
   d. Emulates webcam video and AEC speakerphone audio over single USB connection
   e. Emulates computer soundcard
   f. Bridges audio and video over Q-LAN to USB
   g. Route USB HID events across Q-LAN networks
   External Power Supply or PoE enabled (802.3af)

2.11 VIDEO MATRIX SWITCHER

A. SELF CONTAINED UNIT

1. Basis of Design: Crestron DMPS3-4K-150-C
   a. HDMI Inputs: 4
   b. HDBaseT Inputs: 2
   c. HDMI Outputs: 1
   d. HDBaseT Outputs: 1
2. Approved Substitute
   a. AMX
   b. Extron

B. MODULAR UNIT

1. Basis of Design: Crestron DM-MD8X8-CPU3
   a. HDMI Inputs: 0-8
   b. HDBaseT Inputs: 0-8
   c. HDMI Outputs: 0-8
   d. HDBaseT Outputs: 0-8
2. Approved Substitute
   a. AMX
   b. Extron

2.12 WIRELESS VIDEO

A. WIRELESS VIDEO SYSTEM

1. Basis of Design: Mersive Solstice Pod
   a. Dual HDMI Outputs for Dual Screen Rooms
   b. Dual USB for Camera and Audio
   c. Wired or Wireless Network Connection
   d. Power-over-Ethernet (PoE) Compatible
2. Approved Substitute
   a. Barco Clickshare CX50 ***<u>Gen 1</u>***

2.13 OVERHEAD PROJECTORS

A. LASER PORJECTOR

1. Basis of Design: Panasonic: PT-RCQ80
   a. Lumens: 8000
   b. Type: 1 Chip DLP Laser
   c. Aspect Ratio: 16:10, Native, 16:9 Compatible
   d. Native Resolution: (4K Downscaled)
   e. HDMI Inputs: 1
   f. DVI-D Inputs: 1
   g. HDBaseT Inputs: 1
   h. LAN Port: 1
   i. RS-232 Ports: 1
2. Approved Substitute
   a. Barco
   b. Christie
   c. Sony

2.14 MOTORISED PROJECTION SCREEN

A. Basis of Design: DRAPER ACCESS E 184”

1. Surface Material MATTE WHITE
2. Aspect Ratio: 16:9
3. Voltage: 110V

B. Approved Substitute
   a. DA-LITE

2.15 MOTORISED PROJECTOR LIFE

A. Basis of Design: DRAPER Scissor Lift SL6

1. Extension: 6’ Max
2. Max Load: 125lb
3. Voltage: 115V

C. Approved Substitute
   a. Chief

2.16 A/V CONTROL EQUIPMENT

A. CONTROL PROCESSOR

1. Basis of Design: Crestron CP4

a. LAN Port: 1
b. Balanced Stereo Audio Outputs: 1
c. RS-232 Ports: 3
d. IR Ports: 8
e. Relay Ports: 8

2. Approved Substitute
a. AMX
b. Extron

B. Wired Touch Panel – TYPE 1

1. Basis of Design: Crestron TSW-1070-B-S
a. POE LAN Port: 1

C. Wired Touch Panel – TYPE 3

1. Basis of Design: Crestron MPC3-302-W
a. POE LAN Port: 1
b. Cresnet Port: 1
c. Relay Ports: 2
d. COM/RS-232 Ports: 1
e. I/O Ports: 1

2.17 ROOM SCHEDULING EQUIPMENT

A. Wall Mounted Scheduling Panel

1. Basis of Design: Crestron + Microsoft Teams Panel
a. LAN PoE Port: 1
b. Microsoft Exchange Server Support

2. Approved Substitute
a. Evoko
b. Logitech

2.18 UNINTERRUPTIBLE POWER SUPPLY

A. Horizonal Rack-Mounted Ups

1. Basis of Design: Tripp Lite SMART1000RM1U
a. Output Volt Amp Capacity (VA): 1000
b. Output Watt Capacity (WATTS): 800
c. Full Load Runtime: 4 MIN. (800W)
d. Half Load Runtime: 14 MIN. (400W)

2. Approved Substitute
a. APC

b. EATON

2.19 HARDWARE

A. Ceiling Box

1. Basis of Design: FSR CB 22P
2. Approved Substitute
   a. Chief
   b. Middle Atlantic

B. Floor Box

1. Basis of Design: Wiremold Evolution EFB45
   a. Capacity: 4 x 1-Gang
2. Approved Substitute
   a. FSR

C. Wall Box

1. Basis of Design: Chief PAC 526
2. Approved Substitute
   a. FSR

D. Equipment Rack

1. Basis of Design: Middle Atlantic SRSR-2-14
   a. TYPE: Slide-out Rotating Equipment Rack
   b. Rack Units (RU): 14
2. Approved Substitute
   a. CPI
   b. B-LINE
   c. Legrand

E. Cable Cubby

1. Basis of Design: Extron Cable Cubby 500
   a. TYPE: Retractable Cable Cubby
   b. Modules: 4
2. Approved Substitute
   a. Crestron
   b. Legrand

F. DISPLAY MOUNTS

1. WALL MOUNT Basis of Design: CHIEF XTM1U

2. CEILING MOUNT Basis of Design: CHIEF XCM1U

PART 3 - EXECUTION

3.1 INSTALLATION

A. All devices and components shall be compatible and installed in accordance with contract drawings, manufacturer's instructions and approved submittal data.

B. The Contractor shall install all system components including furnished equipment, and appurtenances in accordance with the manufacturer's instructions, and adjustments required for a complete and operable system.

C. Adjust all cameras to specified resolution for area of install. Make all necessary adjustments to obtain clear, crisp images and desired field of view to the Owners Representative's satisfaction. It is the responsibility of the contractor to select camera lenses as necessary to obtain required field of view. No additional funding shall be provided for additional lenses.

D. ***Coordinate with Owners Representative for all system programming requirements.*** Obtain a printout of all programming prior to system check out and final acceptance inspection.

E. Install the initial system, setup parameters, and program all system components as necessary for proper operation. Submit all programming on electronic media to the Owner.

F. Install all Point-to-Point wiring with appropriate terminal connections for every wire and component termination so that all connections are mechanically and electrically secure.

G. Install field wiring in continuous lengths, without splices.

H. Verify upon job completion that all wiring and terminations are clearly labeled using the Salvation Army standards to identify the wire and terminal.

3.2 PRODUCT HANDLING

A. The Contractor shall be responsible for any and all loss or damage in the shipment and delivery of all material until transfer of title to the Salvation Army.

3.3 HARDWARE INSTALLATION

A. The Contractor shall obtain written permission from the Salvation Army before proceeding with any work which requires cutting into or through any part of the building structures such as, but not limited to, girders, beams, concrete, carpeted or tiled floors, partitions or ceilings. The Contractor shall also consult with the Owner's Representative before cutting into or through any part of the building structures where fireproofing or moisture proofing could be impaired.

B. The Contractor shall take all steps necessary to ensure that all public areas remain clear or are properly marked during installation or maintenance.

C. The Contractor shall develop a detailed network map to be utilized as a road map during the implementation of the LAN. This map shall show all segments, all interconnects between segments and all active network devices. This network map shall not include the individual nodes interconnected to each concentrator, but will have the modules, interfaces, protocols, addresses and other identifying features for each concentrator and other active device.

D. The Contractor shall also develop a Cable Plant interconnectivity chart showing all fiber patch panels and individual identifiers for each fiber associated with the interconnectivity of each network device.

E. Prior to installing Wireless Access Points, conduct and document an RF site survey to determine the maximum operating range between an AP (fixed location) and mobile stations for a specified transmit power level. Survey shall also identify holes of coverage due to multi-path, interference sources, and interference from other wireless installations.

F. The contractor shall place materials only in those locations that have been previously approved. The Owner's Representative shall approve any other locations, in writing.

3.4 SYSTEM STARTUP

A. The Contractor shall not apply power to the system until after:

1. System and components have been installed and inspected in accordance with the manufacturer's installation instructions.
2. A visual inspection of the system components has been conducted to ensure that defective equipment items have not been installed and that there are no loose connections.
3. System wiring has been tested and verified as correctly connected as indicated.
4. All system grounding and transient protection systems have been verified as properly installed and connected, as indicated.
5. The Owner's Representative have approved the installation.

B. Satisfaction of the above requirements shall not relieve the contractor of responsibility for incorrect installations, defective equipment or collateral damage as a result of contractor's deficient work/defective equipment.

3.5 ACCEPTANCE TESTING

A. The contractor shall develop and execute an onsite acceptance-testing program.

B. The plan shall address all requirements identified in this specification and test all contractor supplied cabling and hardware components. The plan shall follow accepted industry testing practices and have a method of independent verification described.

C. Any specified item that does not satisfy the requirements of this specification shall be replaced, upgraded, or added by the contractor as necessary to correct the noted deficiencies. After correction of a noted deficiency, re-testing shall be performed to verify the effectiveness of the corrective action.

3.6 IDENTIFIERS, LABELS AND LABELING SYSTEM

A. All Identification and Labeling shall follow Specification: 270553–Identification and Labeling of Communication Infrastructure. **Any deviation from the specification must be approved by the Owner's Representative prior to installation.**

END OF SECTION 274100

SECTION 276200
PUBLIC SAFETY DISTRIBUTED ANTENNA SYSTEMS (PSDAS)

PART 1 - GENERAL

1.1 SUMMARY

A. Section Includes:
1. This section includes the specifications for the installation of a Distributed Antenna System for the purpose of distributing Public Safety Radio throughout the Facility.
2. The carrier DAS is not in scope except for a raceway from roof to the MDF.
3. The carrier DAS is not part of the public safety DAS.
4. The Public Safety DAS is entirely specified within and will be provided as part of this project.
5. The contractor shall provide the necessary head end fiber interfaces and configuration required to provide a fully functional PS DAS system.
6. The antennas are connected via 50 Ohm coaxial cable to active Remote Units in the IDF closets or where shown on the drawings. The Remote Units are connected to a radio head-end via a fiber optic backbone cable.
7. Some common services supported by a Public Safety DAS shall include
8. 700 MHz Public Safety
9. 800 MHz Public Safety

1.2 DEFINITIONS

A. Abbreviations used include the following:
1. AC - Alternating Current
2. AHJ - Authority Having Jurisdiction
3. BIM - Building Information Modeling
4. BDA - Bidirectional Amplifier
5. BTS - Base Transceiver Station
6. CW - Continuous Wave
7. DAS - Distributed Antenna System
8. DC - Direct Current
9. EIRP - Effective Isotropic Radiated Power
10. EMI - Electromagnetic Interference
11. ER - Equipment Room
12. ERP - Effective Radiated Power
13. ERRC – Emergency Responder Radio Coverage
14. ICT - Information and Communication Technology
15. LMR - Land Mobile Radio
16. LTE - Long Term Evolution
17. MCU - Master Control Unit
18. MIMO - Multiple Input/Multiple Output (antenna)
19. PoE - Power over Ethernet
20. PIM - Passive Intermodulation

21. PTP - Point-to-Point
22. RF - Radio Frequency
23. RFI - Radio Frequency Interference
24. SNMP - Simple Network Management Protocol
25. TR - Telecommunications Room
26. UMTS - Universal Mobile Telecommunications System
27. UTP - Unshielded Twisted-Pair
28. UHF - Ultra High Frequency
29. VHF - Very High Frequency
30. VSWR - Voltage Standing Wave Ratio
31. WAN - Wide Area Network
32. WLAN - Wireless Local Area Network
33. WSP - Wireless Service Provider

1.3 REFERENCES

A. Related Sections: The references and standards listed herein shall be considered part of this specification. Bidder and Contractor shall conform to the following references and standards:

1. 270526 Telecommunications Grounding and Bonding
2. 270528 Interior Communication Pathways
3. 270543 Exterior Communication Pathways
4. 270553 Identification and Labeling of Communications Infrastructure
5. 271033 Queue Management System
6. 271045 Restroom Monitoring System
7. 271100 Communications Cabinets and Equipment Rooms
8. 271300 Backbone and Riser Media Infrastructure
9. 271500 Horizontal Media Infrastructure
10. 272100 Data Communications Network Equipment
11. 272200 PC, Laptop, and Servers Equipment
12. 274100 Electronic Visual Information Display System (EVIDS)
13. 275116 Public Address System
14. 276200 Public Safety Distributed Antenna System (PSDAS)

B. Specific reference in specifications to codes, rules, regulations, standards, manufacturer’s instructions, or requirements of regulatory agencies shall mean the latest printed edition of each in effect at the date of contract unless the document is shown dated.

C. Conflicts

1. Between referenced requirements: Comply with the one establishing the more stringent requirements.
2. Between referenced requirements and contract documents: Comply with the one establishing the more stringent requirements.

D. NFPA 1225 (2022), Standard for Emergency Services Communications

1. Pathway Survivability

a. Section 18.12.3.3, backbone cables and backbone cable components installed in buildings that are fully protected by an automatic sprinkler system in accordance with NFPA 13 shall not be required to have a fire resistance rating. They should conform to one of the following conditions:
b. Section 18.12.3.4 states that backbone cables and backbone cable components installed in areas that are not directly sprayed by fire sprinklers should have a fire resistance rating in accordance with 18.12.3.4(1)(a), 18.12.3.4(1)(b), or 18.12.3.4(1)(c), based on the fire resistance rating of the primary structural frame.
    1) 18.12.3.4(1)(a): backbone cables and backbone cable components installed in areas that are not directly sprayed by fire sprinklers should have a fire resistance rating of 2 hours if the primary structural frame of the building is required to have a fire-resistance rating of 2 hours or more or is classified as heavy timber construction.
    2) 18.12.3.4(1)(b): backbone cables and backbone cable components installed in areas that are not directly sprayed by fire sprinklers should have a fire resistance rating of 1 hour if the primary structural frame of the building is required to have a fire-resistance rating of 1 hour.
    3) 18.12.3.4(1)(c): backbone cables and backbone cable components installed in areas that are not directly sprayed by fire sprinklers should have a fire resistance rating only if the primary structural frame of the building requires a fire-resistance rating of 1 hour or more.

2. 18.3.1 Component Enclosures
    a. 18.3.1.1: battery systems used for the emergency power source should be contained in a NEMA 3R or higher-rated cabinet.
    b. 18.3.1.2: all repeater, transmitter, receiver, signal booster components, optical-to-RF and RF-to-optical converters, and external filters should be contained in a NEMA 4– or NEMA 4X–type enclosure(s).
    c. 18.12.1.3 requires that in-building emergency responder communication enhancement systems installed within buildings shall be listed and labeled in accordance with UL 2524, In-building 2-Way Emergency Radio Communication Enhancement Systems.
3. 18.13 Power Sources
    a. At least two independent and reliable power sources shall be provided for all RF emitting devices and any other active electronic components of the system: one primary and one secondary.
    b. At least two independent and reliable power sources shall be provided for all RF emitting devices and any other active electronic components of the system: one primary and one secondary.
4. 18.13.1 Primary Power Sources
    a. Supplied from a dedicated branch circuit.
    b. Permanently connected.
    c. Compliant with NFPA 72
    d. Protected from overvoltage.
5. 18.13.2 Secondary Power Source
    a. A storage battery dedicated to the system with 12 hours of 100% system operation capacity.
    b. An alternative power source of 12 hours at 100% system operation capacity as approved by the AHJ.

c. A 2-hour standby battery and connection to the facility generator power system, providing the facility generator powers system can support the complete system load for 12 hours.

E. References
1. Code of Federal Regulations (CFR) – Title 47 CFR All Parts “Wireless Telecommunications” Federal Communications Commission (FCC), Washington, DC
2. Houston Construction Code Emergency Responder Radio Coverage (ERRC)
3. Houston Building Code 914 and Houston Fire Code Section 510
4. FCC: 47 CFR-Telecommunications, Part 87-Aviation Services, Subpart I-Aeronautical Enroute and Aeronautical Fixed Stations
5. FAA: Federal Aviation Regulations Part 1, 91, 119, 121, and 135.
6. The Aeronautical Frequency Committee (AFC) Manual, Chapter 3 and Appendix 6.
7. The Aviation Spectrum Resources, Inc. Aeronautical Ground Station Manual
8. Motorola Standards for Communications Sites, R56
9. Underwriters Laboratories (UL□) Cable Certification and Follow Up Program
10. National Electric Code (NEC□)
11. UL Testing Bulletin

1.4 REFERENCE CODES AND STANDARDS

A. NFPA 1225 (2022), Standard for Emergency Services Communications

B. ANSI/BICSI 006-2020, Distributed Antenna System (DAS) Design and Implementation Best Practices

C. BICSI Telecommunications Distribution Methods Manual (TDMM), 14th Edition

D. Motorola Standard and Guidelines for Communications Sites, R56

E. ANSI/BICSI 003, Building Information Modeling (BIM) Practices for Information Technology Systems

F. ANSI/BICSI N1, Installation Practices for Telecommunications and ICT Cabling and Related Cabling Infrastructure

G. ANSI/BICSI N3, Planning and Installation Methods for the Bonding and Grounding of Telecommunication and ICT Systems and Infrastructure

H. IEEE C2, National Electrical Safety Code

I. IEEE 802.3, Standard for Ethernet

J. NFPA 70, National Electrical Code

K. NFPA 72-2013, National Fire Alarm and Signaling Code,

L. ANSI/TIA-568.2, Balanced Twisted-Pair Telecommunications Cabling and Components Standard

M. ANSI/TIA-568.3, Optical Fiber Cabling Components Standard

N. ANSI/TIA-569, Telecommunications Pathways and Spaces

O. ANSI/TIA-606, Administration Standard for Telecommunications Infrastructure

P. ANSI/TIA-607, Generic Telecommunications Bonding and Grounding (Earthing) for Customer Premises

Q. ANSI/TIA-5017, Telecommunications Physical Network Security Standard ANSI/BICSI 006-2020 4 United States Code of Federal Regulations (CFR)

R. 47 CFR 1.1310, Radiofrequency Radiation Exposure Limits

S. 47 CFR 17, Construction, Marking, And Lighting of Antenna Structures

T. 47 CFR 90.219, Use of Signal Boosters

U. IEC 60331-25, Tests for Electric Cables under Fire Conditions - Circuit Integrity - Part 25: Procedures and Requirements - Optical Fibre Cables

V. IFC International Fire Code, 2015/2018/202

W. UL 2196, Fire Test for Circuit Integrity of Fire-Resistive Power, Instrumentation, Control and Data Cables

X. UL 2524, Second Edition by Underwriters Laboratories

1.5 DESIGN PARAMETERS

A. If a donor antenna exists, isolation shall be maintained between the donor antenna and all inside antennas and shall be a minimum of 15 dB above the signal booster gain under all operating conditions.

B. Downlink Signal Level (RSS): ≥ -95 dBm

C. Uplink Carrier/Noise Ratio: ≥ 20 dBm

D. Coverage Requirement for Public Safety: ≥ 95%

E. PIM: > -150 dBc (decibels relative to the carrier)

F. System Operating Margin: > 15 dB

G. Fade Margin: > 15 dB

H. Body Loss: 3 dB

I. Wall Loss: 5 dB

J. Battery backup for BDA and remote units: 12 hours

1.6 SUBMITTALS

A. Manufacturer's data for all proposed equipment.

B. Proposed equipment data must be submitted for all coaxial cabling, antennas, radios, amplifiers, and accessories. Submitted data shall include, as a minimum:

C. Manufacturer's name
  1. Manufacturer's part numbers, model numbers, and specifications

D. Delegated Design Submittal: For Emergency Responder Radio Coverage (ERRC) including radio propagation analysis (Heat Maps) signed and sealed by qualified professional engineer responsible for their preparation.

E. Detailed Design Package
  1. The Contractor will prepare a detailed design package consisting of proposed equipment locations, antenna placement with RF link budgets and supporting analysis/test measurements. The detailed system level design package will show the design criteria, method, and system calculation of the system demonstrating compliance to requirements set forth in the design. The following shall be included in the Detailed Design Package:

    a. Contractor Pre-Design Site Survey Cost to Include:
      1) Detailed site survey noting cable pathways, installation requirements, restrictions, etc.
      2) Continuous Wave (CW) testing
      3) Data import into iBwave design file to improve accuracy of design.
    b. Contractor Design Requirements:
      1) iBwave design services to include detailed heat maps.
      2) Propagation studies at worst case scenario
      3) Deliverables include: iBwave design file (.ibw and .pdf versions)
    c. Power Budgets - The Contractor will prepare maximum power consumption budgets for each equipment location.
    d. Bill of Material - The Contractor will prepare a final, comprehensive bill of material (BOM) for all Contractor sourced materials and equipment. The BOM will be provided for information/documentation purposes and does not affect the Contract Sum, up or down, unless said difference is the result of a mutually agreed change to the Contract. Bill of Material does not include spares.
    e. Product Data Sheets - The Contractor will provide product data sheets for all products listed in the final BOM.
    f. Racks, Cabinets, and Enclosure Layout Drawings - The Contractor will prepare elevation layout drawings for all Contractor provided equipment racks, cabinets, and enclosures.
    g. Recommended Spares - The Contractor will provide the City a recommended spares list based on a Line Replaceable Unit maintenance philosophy.
    h. Structural/Mechanical Design - The Contractor shall not be required to perform any structural and mechanical analysis.

i. Installation Drawings - The Contractor will electronically update the Architect's Design drawings to incorporate the Contractor's proposed installation, including equipment locations, general coaxial cable routes, and specific antenna placements as required to adequately define the relevant design requirements. The Contractor will then submit these modified drawings to the Airport Engineer for approval in accordance with the contract submittal requirements. The Contractor shall be responsible for incorporating any supplemental information and formatting required by the Airport. The Contractor shall submit the installation drawings to the Airport for approval. The Contractor will be responsible for updating these drawings as may be necessary due to changes in equipment locations and/or antenna placements necessary to ensure approval of the final design submission.

F. System Commissioning Procedure

1. The Contractor will prepare and submit a detailed commissioning procedure outlining specific activities to be performed to ready the system for System Acceptance Testing. The procedure will address setting system gains necessary to achieve the desired noise and interference levels. The commissioning procedure will list all required test equipment and include all test record sheets and to include at a minimum the following: Test each device for Uplink/Downlink Power Output, Noise Figure and PIM at all input and output ports.
   a. Continuous Wave testing for each sector, including RSSI level based on 43 dBm output power.
   b. Deliverables to include: System Baseline System Performance Test Report and CW Test report with findings.

G. System Acceptance Test Procedure

1. The Contractor will prepare and submit for approval a System Acceptance Test Procedure for conducting system acceptance of the System. The test procedure will validate the electrical parameters specified in Paragraph 1.4, Design Parameters, including, but not limited to, measurement of downlink signal level, uplink carrier-to-noise ratio, and uplink noise levels at the base station point of interface.

H. Record Drawings: Furnish CAD drawings of all installed cabling and equipment.

1.7 QUALITY ASSURANCE

A. Delegated Design: Engage a qualified professional engineer, as defined in Section 01 45 00 "Contractors Assurance Program" to finalize design of ERRC (Public Safety DAS).

B. Contractor Qualifications

1. Must be a Certified Value-Added Reseller (VAR) of the solution being installed. Submit verification of certification in letter form or certificate signed by the manufacturer as a formal submittal in accordance with Specification Section 01 33 00 and 01 45 00. The contractor must adhere to the engineering, installation and testing procedures provided by the manufacturer and utilize the authorized manufacturer components and distribution channels in provisioning this Project.
2. Must provide three references for projects of equivalent scope, type and complexity of work completed within the last three years.

C. Hardware manufacturer's experience:
   1. All components shall be produced by manufacturers who have been regularly engaged in the production of radio equipment, cabling, and antenna components of the types to be installed in this project for a period of five years.

1.8 WARRANTY

A. The warranty on all Radio components shall be for a period of not less than one year. If items supplied as part of this project have longer warranties, Contractor shall supply longer warranty.

B. The warranty shall cover the replacement or repair of defective product(s) and labor for the replacement or repair of such defective product(s).

PART 2 - PRODUCTS

2.1 PUBLIC SAFTEY HEAD END

A. The DAS Head End located in the Data Center

B. Integrated BDA + Battery Backup + Annunciator Features:
   1. Supports Public Safety 700 & 800MHz dual band version
   2. 24hr Battery backup and Annunciator included in the same cabinet
   3. Band 14 available
   4. Upgradeable options: Class B to Class A & 0.5W/27dBm to 2W/33dBm
   5. Fully digital, FPGA based
   6. Auto Diagnostic
   7. Automatic gain control per band; Per channel and per time slot on channel selective mode
   8. Oscillation detection with alarm and auto-shutdown
   9. Antenna Isolation measurement feature
   10. Innovative donor antenna disconnect and malfunction alarms
   11. EPO switch support • Weatherproof enclosure, NEMA 4
   12. NFPA compliant with dry contact alarms
   13. Uplink and downlink squelch, per channel and per time slot on channel selective mode
   14. Assisted GUI wizard with Automatic Calibration features (Patent Pending) to reduce the uplink noise
   15. User adjustable gain control, UL and DL independent, per band and per channel on channel selective mode

16. UL2524 2nd Edition Listing with SGS, Nationally Recognized Testing Laboratory (NRTL) approved by OSHA for UL2524
17. IFC 2015, 2018, 2021 Edition
18. FPA 72 2013 Edition, NFPA 1221 2016 2019 Edition, NFPA 1225 2022 Edition
19. Buy American Compliant: Meets the definition of Domestic
20. Construction Material under the Buy American Act
21. 3 years Warranty

C. Applications
1. Provides simultaneous support of Analog and Digital
2. communications for P25 Phase I & Phase II, DMR, NXDN and Conventional systems
3. Indoor coverage: buildings, schools, hospitals, casinos, tunnels, metro stations
4. Outdoor coverage: oil rigs, stadiums, dense urban areas, rural areas

D. Standards and Codes
1. Buy American Compliant: Meets the definition of Domestic
2. Construction material under the Buy American Act
3. FCC (Federal Communications Commission-US)
4. IC Approved
5. SGS C-UL Compliant
6. UL2524 2nd Edition Standard with SGS, Nationally Recognized
7. Testing Laboratory (NRTL) approved by OSHA for UL 2524
8. IFC 2015, 2018, 2021 Edition
9. NFPA 72 2013 Edition, NFPA 1221 2016 2019 Edition, NFPA 1225
10. 2022 Edition
11. ROHS Compliant

E. Basis of Design: Honeywell HONBDA-7S

2.1 DONOR ANTENNAS

A. TYPE 2 – YAGI Antenna 698 - 869 MHz
1. Type: YAGI 10 element
2. Gain: 14 DBi
3. Front/Back Ratio: >18 dB
4. Lightning Protection: DC Ground

5. Rated Wind Velocity: 130 mph
6. Operating Temperature: -40 to 65 C
7. Horizontal Beamwidth: 40 degrees
8. Vertical Beamwidth: 32 degrees
9. VSWR: <= 1.5:1
10. Max Input Power: 100W

B. Basis of Design: Honeywell BDA-YDA763869-14-1

2.2 Lightning Protection

A. Lightning protection shall be provided at the RF feeder building entrance in compliance with Section 510.4.2 Per NFPA 1221 Section 9.6.3. Installed per NFPA 780.

B. Lightning Protection Characteristics:

1. Type: Coaxial Surge Protector
2. Frequency: DC to 7GHz
3. Power Rating: 70W
4. Insertion Loss: <0.2 dB
5. Return loss: > 19 dB
6. Impedance: 50 ohms
7. VSWR: <1.25:1
8. Max. load current: 10 A
9. Operating current(Continious current at Uc): None
10. Max. discharge current(max. withstand @ 8/20 -s by pole): 20 kA
11. Protection mode(s): Common mode
12. Protection level (@ In (8/20-s): < 1100 V
13. Impulse current(2 x 10/350-s Test - D1 Category): 1 kA
14. Nominal discharge current(8/20-s Test x 10 - C2 Category): 5 kA
15. Max Power: 70 W
16. Typical let through energy (50 ohms): Input 4kV 1.2/50-s - 2kA 8/20-s) 2.2 mJ
17. DC Pass: True
18. Insulation resistance: ≥10 GOhms
19. Technology: Gas discharge tube
20. Connector: N Female/Female

21. Mounting: Feedthrough
22. Operating temperature: -40/+85°C
23. Protection rating: IP66
24. Outdoor application: Yes
25. Failsafe mode: Short-circuit

C. Basis of Design: Honeywell BDA-P8AX09-6G-N/FF

2.3 Fire Rated Coaxial Cable

A. The Fire Rated Coaxial Cable and connectors shall meet the following standards:

1. UL 2196 Standard for Fire Test for Circuit Integrity of Fire-Resistive Power, Instrumentation, Control and Data Cables
2. NFPA 72 & NFPA 1221 survivable at temperatures up to 1,850 degrees F

B. Cable Characteristics:

1. Cable: Type Air-Dielectric: Corrugated
2. Size: 1/2’’
3. Inner Conductor: mm (in) 4.8 (0.19) Copper Wire
4. Dielectric: mm (in) 11.81 (0.465)
5. Outer Conductor: mm (in) 13.8 (0.54) Corrugated Copper
6. Jacket: mm (in) 18 (0.71) PVC, Plenum-Rated / Color Red
7. Impedance: 50 +/-2 Ω
8. Maximum Frequency: 1 GHz
9. Attenuation and Power Rating:
   a. 150 MHz, 0.93 dB/100 ft, 2.36 KW
   b. 450 MHz, 1.73 dB/100 ft 1.27 KW
   c. 700 MHz, 2.25 dB/100 ft 0.97 KW
   d. 800 MHz, 2.44 dB/100 ft 0.90 KW
   e. 900 MHz, 2.63 dB/100 ft 0.83 KW
   f. 1000 MHz, 2.79 dB/100 ft 0.78 KW
10. Velocity: 85%
11. Capacitance pF/m: (pF/ft) 70.6 (21.5)
12. Inductance µH/m: + 0.19 (0.058)(µH/ft)
13. Peak Power Rating: 40 kW

14. RF Peak Voltage: 2000 Volts
15. Jacket Spark: 8000 Volt RMS
16. Inner Conductor dc Resistance: 0.96 (0.29) Ω/1000 m
17. Outer Conductor dc Resistance: 1.31 (0.4) Ω/1000 m
18. Maximum VSW: 1.5:1
19. Minimum Bending Radius: Single Bend mm (in) 178 (7)
20. Minimum Bending Radius: Repeated Bends mm (in) 254 (10)
21. Bending Moment Nm (lb*ft) 8.7 (6.4)
22. Tensile Strength: 890 (200) N (lb)
23. Crush Strength kg/cm (lb/in) 31.25 (175.0)

C. Flame Retardant Jacket Specifications: Meets/Exceeds Steiner Tunnel Test Method NFPA-262. NEC820-53 (a), CATVP, UL2196 (2hours).

D. Regulatory Compliance: NEC Article 820 CATVP Cable to UL1655, Circuit integrity UL Listed to UL2196, CATVP, NFPA-262, NFPA130, NFPA 72, NFPA 1221 2019 (section 5.5.1.1), Canadian CSA C.22.2/FT6, UL R40176, E239351, UL System FHIT 1250.

E. Installation Temperature: -20 to 60 (-4 to 140) °C (°F)

F. Storage Temperature: -40 to 75 (-40 to 167) °C (°F)

G. Operation Temperature: -40 TO 1,010 (-40 TO 1,850) °C (°F)

H. Basis of Design: RFS Dragonskin

2.4 Two Hour Fire-Rated Cabinet

A. The 2-hour fire rated cabinet shall provide fire and temperature protection for connectors, tappers, splitters and other components used in ERCES systems.

B. Complies with requirements of the International Building Code (IBC), the International Fire Code (IFC), and NFPA 1221 and 1225 standards for Emergency Services Communications Systems.

C. Characteristics:

1. Temperature control provides circuit integrity at the connector/tapper/splitter
2. Enables flexible cable routing of connectors/tapper/splitters anywhere in the building
3. Allows splitting: Single cable in; dual cable out
4. Easy to install: Readily serviceable

5. Mounting: Floor, Wall, Ceiling
6. Exterior Dimensions: 30 x 20 x 20 inches
7. Interior Dimension: in 20 x 10 x 10 inches
8. Weight:170 lbs
9. Certifications: UL 263 & ASTM E1725 labeled and listed

D. Basis of Design: 2HB-DS-CAB

2.5 Indoor Antennas

A. TYPE 1 – Indoor Ceiling Mount Omnidirectional Antenna 380 – 698, 698 – 960, 1710 – 2700 MHz

1. Type: Ceiling Mount Omnidirectional antenna
2. Freq. Range: 380-698 MHz, 698-960 MHz, 1710-2700 MHz
3. Gain(max): 2±1.5, 3±1.5, 6.5±1.5 dBi
4. VSWR: ≤2.5, ≤2.5, ≤1.7
5. Vertical Beamwidth (Typical value): 85, 60, 25 degrees
6. Impedance: 50 Ohms
7. Polarization: Vertical
8. Max. Power: 50W
9. Connector Type: N-female
10. Dimension: 12.6×6.88 inches
11. Weight: 1.54 lbs (0.7±0.2 Kg)
12. Color: White
13. Basis of Design: Honeywell BDA-OIA-3851-6996

2.6 RF PASSIVE EQUIPMENT

A. Duplexer

1. Characteristics:
   a. Frequency: CH1: 135-520 MHz CH2: 690-2700 MHz
   b. Connectors: Type N, 7/16DIN or 4.3/10 Type Connectors
   c. Insertion loss: < 1.0 dB
   d. VSWR: 1.4:1
   e. Isolation: ≥35

f. Impedance: 50 Ohm

g. IP65 Rated

h. Power Rating: 50W

i. Relative Humidity: 5% -95%

2. Basis of design: Honeywell BDA-DBC-22

B. Tapper

1. Characteristics:

a. Frequency: 340 - 960 MHz

b. Connectors: Type N

c. Dissipative loss: < 0.1 dB

d. VSWR: 1.35:1

e. IP67 Rated

f. Power Rating: 200W

g. Basis of design: MicroLab D2-41FN

2. Basis of Design Microlab:

a. DN-EP-20-738FE (20 dB)

b. DN-PS-10-396FN (10 dB)

c. DN-EP-3-738FE (3 dB)

d. DN-PS-8-396FN (8 dB)

e. DN-PS-6-396FN (6 dB)

2.7 JUMPERS AND CONNECTORS

A. Jumper Cable with interface types 4.3-10 Male and 4.3-10 Male, 1

1. Comscope L4A-HPHMHM-1M

B. 0.500” Distribution Cable RF Connector

1. Commscope L4TNM-PSA: Type N Male Positive Stop™ fits LDF4-50A or approved equal.

C. Fiber Optic Patch Cord

1. Duplex, Single Mode, SC/APC type connectors on RU end, and LC/APC type connectors on Patch Panel end.
2. Length as required to connect RU to IDF Fiber Patch Panel.
3. All patch cords shall be routed through an innerduct.
4. Label Patch cord and innerduct on both ends.

PART 3 - EXECUTION

3.1 EXAMINATION

A. Verify conduit, raceways and boxes are properly installed following Section 271300.

B. Verify conduit is minimum 1-inch diameter.

C. Verify main grounding system is properly installed and tested following Sections 260526

3.2 INSTALLATION

A. All RF antenna cable shall be installed in a conduit from the antenna to the IDF

B. Install work following drawings, manufacturer’s instructions and approved submittal data.

C. The DAS installation shall meet all applicable national and local codes pertaining Distributed Antenna Systems.

D. The contractor shall adhere to the installation schedule of the general contractor and should attend all construction meetings scheduled by the general contractor.

E. The installation will include coordination, testing and problem resolution with the system vendors.

F. The contractor shall provide all test equipment necessary to properly install, maintain, and troubleshoot the system. Any equipment purchased for this contract shall become the property of the City upon completion of the project.

G. All cables shall be labeled in accordance with the Airport’s numbering scheme and automated cable management system. CMAR to confirm IDF naming convention before any cables are labeled.

H. Cable labels shall be placed in the following locations: on jack face plates, on cable inside back boxes, junction boxes, access points, and manholes/handholds, on cable above the terminations in the TR and MDF, on patch panels, and every fifty (50) feet when not in conduit. Conduits shall be labeled “communications” every fifty (50) feet and at the origination and destination.

I. Upon completion of the installation, Contractor shall prepare as built documentation of the entire System. This documentation should include:
1. Drawings
a. All drawings shall be provided on electronic media in a form compatible with Autodesk AutoCAD and Revit and PDF.
b. A complete set of project plans will be provided to the Contractor.
c. The Contractor will modify the drawings by placing the pertinent information on a separate layer.
d. All of the requested drawings will be placed on these plans so that all cable routes are to scale and provide accurate information for use in the future when changes are made and the exact location of cables are required to avoid service interruptions.
e. A complete diagram of all terminations in the Telecommunications Closets.
f. A complete diagram of all coaxial riser cable.
g. A complete diagram of all coaxial inter-building cable.
h. Floor plans showing exact cable routings with each outlet clearly marked with cable number.
2. Documentation
a. All cable inventory data documentation will be submitted in designated Microsoft Excel format, or ASCII, comma delimited files with fields in identical order so that data can be incorporated into existing databases.
a. Documentation on customer drop cable will include cable number and length of cable.
b. Documentation on distribution riser cable and inter-building cable will include cable number, source and destination, type of cable, length of cable, and quantity.

3.3 CONTRACTOR’S FIELD QUALITY CONTROL

A. Tests under Section 014500.

B. Manufacturer’s Testing
1. Copper Cable testing
2. Testing of all copper cabling shall be performed prior to system startup. One hundred (100) percent of the distribution cable shall be tested for length, opens, shorts, and sweep tested for all frequencies the system will use. The contractor, at no charge to the City, shall correct all discrepancies. Complete end-to-end test results must be submitted to the City for approval.
3. At a minimum, a City Engineer shall randomly perform unannounced, on-site reviews during the installation. In addition, the City Engineer shall perform a final inspection and a complete review of the test results before the installation is accepted.

C. System Commissioning
1. Once the installation has been completed and tested by the Contractor in accordance with established verification procedures and all noted deficiencies have been appropriately resolved and documented, the Contractor will be responsible for system commissioning of the System. System spares shall be available for use prior to the start of system commissioning and shall be available throughout system commissioning and system acceptance testing, if purchased.

2. System commissioning will address setting system downlink and uplink gains necessary to achieve the desired noise and interference levels. Alarm verification will also be performed to ensure that faults are displayed properly.
3. The Contractor will prepare a comprehensive test report containing measured test data taken during commissioning of the system. One (1) CD containing the test report will be submitted to the Airport in accordance with the contract submittal procedures for information only. The commissioning records will be used to denote the system baseline performance. The test results will be documented by location and include a complete as-installed equipment configuration list (i.e., part/serial numbers for each major assembly).

D. RF System Acceptance Testing

1. Once the system has been successfully commissioned, the Contractor will perform system acceptance testing in accordance with the System Acceptance Test Procedure as required to validate the electrical parameters specified in Paragraph 1.2, Design Parameters. System acceptance testing will include measurement of downlink received signal level and estimating uplink Carrier-to-Noise (C/N) ratio.
2. Downlink signal level measurements and uplink carrier-to-noise estimates will be made in public areas free of crowd loss and recorded in 100% of the coverage area using a CW test signal in the operating band and measured using a calibrated receiver with dipole antenna positioned approximately 4 feet above the surface. Measurements will be recorded for the test routes defined and approved in the System Acceptance Test Procedure. Measurement samples will be collected at a rate in excess of the Nyquist rate and averaged over forty (40) wavelengths. If 95% of the averaged data points meet or exceed the levels specified in Paragraph 1.2, Design Parameters, the system will be deemed to have successfully passed this test.
3. Downlink received signal levels will be measured by injecting CW signals, in the 800 MHz and 1900 MHz bands, into the downlink Point of Interface and then performing a walkthrough of the coverage areas while recording the data with a portable receiver. The receiver will be set to record RSSI levels at a pre-determined CW frequency. Data will be recorded for each area and then post-test analyzed over a 40-wavelength average to provide a relative signal level for each path traveled. Given the injection signal level, the recorded data can be used to calculate the propagation losses as well.
4. The uplink noise floor will be measured to verify that it agrees with predicted levels. The noise floor will be measured by connecting a spectrum analyzer to the uplink RX port. Using the uplink noise floor and the propagation losses calculated during the downlink measurements, the uplink Carrier-to-Noise (C/N) ratio will be calculated.
5. In addition to measuring the downlink signal level and estimating the carrier-to-noise (C/N); the contractor will calculate the service area reliability. The service reliability is equal to the percentage of the test locations that meet or exceed the required service quality which is given by:

   Service Area Reliability (%) = Tp / Tt x 100%

   where:

   Tp = Total of tests passed
   Tt = Total number of tests

6. Total number of tests should be large enough to accurately calculate the required reliability percentage (95%). The Contractor will prepare a comprehensive test report containing measured test data collected during the system acceptance testing. Soft copies of all measured field strength and spectrum analyzer screen displays will be submitted on CD. CDs containing the test report will be submitted to the City for approval in accordance with the contract submittal requirements.

E. Final System Acceptance

1. The Contractor will prepare a System Acceptance Test Report containing the data recorded and analyzed from the System Acceptance Test Procedure, and a summary of the results showing compliance to the system requirements. The Contractor will submit the System Acceptance Test Report to the City for approval in accordance with the contract submittal requirements.
2. The City shall review and approve the System Acceptance Test Report and return it within the time period as identified in this contract.
3. If the City finds fault with the System Acceptance Test Report, they shall, within the time period as identified in this contract, notify the Contractor, in writing, of the fault as it specifically relates to the System Acceptance Test Report and/or the requirements to which acceptance testing was conducted. The Contractor shall work in good faith to immediately resolve the System Acceptance Test Report fault.

END OF SECTION 276200

SECTION 280500
ELECTRONIC SAFETY AND SECURITY

PART 1 - GENERAL

1.1 SUMMARY

A. This Section includes the following:

1. Project overview for the Fort Bend County Information Technology Building.
2. Security System Project Management requirements and Quality Assurance Requirements.
3. Security System Documentation requirements.
4. Security System testing requirements.
5. Except as modified in this section, General Conditions, Supplementary Conditions, applicable provisions of Division 1, General Requirements, and other provisions and requirements of the contract documents apply to work of Division 28 – Electronic Safety and Security.
6. Each section included in Division 28 – Electronic Safety and Security incorporates this section by reference and is incomplete without the provisions stated herein.
7. Coordinate work included in other Divisions, which affect the work in this Division.

B. Project Overview for the Access Control System:

1. The access control system is a system of card readers, electronic locking devices, contacts and other alarm points. All access control and alarm sensing components shall be the Infenias Access Control System by 3xLogix. No substitutions will be allowed. The software will utilize a server-client environment allowing users with appropriate access levels to access the system from anywhere a client system resides.
2. Access control for the facility will consist of locating card readers or other alarm points on all the perimeter doors and interior doors where differing access levels are required or where after hour building entry by authorized personnel is required. Loading docks and other areas that may require after hours entry by unauthorized personnel will receive a, intercom handset for automatic calling to allow someone inside the building to remotely open a door to grant access thru the intercom system. Video monitoring will be used at all locations where unauthorized access may be needed. The security access system will fail- secure during a fire alarm except where magnetic locks or delayed egress devices are utilized. Where magnetic locks or delayed egress devices are used, the system will be fail- safe.
3. Vehicle entry to the facility will be controlled by access cards.
4. In addition, an intercom will be located at designated vehicle gates in the case of unauthorized access needs.
5. All card readers will be 3XLogic type readers to match existing readers. Lock power will be furnished by a separate power supply. All card readers and interior alarm points will tie into the access control system.

6. The contractor will furnish, install, and program the system with coordination from the owner. The contractor will provide all licenses, permitting and associated signage requirements.

C. Project Overview for the Surveillance System:

1. The surveillance system is a system of cameras. The surveillance system will utilize the Pelco Video Expert Surveillance System. The software will utilize a server-client environment allowing users with appropriate access levels to access the system from anywhere a client system resides. The surveillance system will be compatible with a variety of 3rd party hardware manufacturers for cameras, recording devices, viedo streamers and encoders, matrix switches, etc. The system shall contain a graphics user interface allowing the operator point-and-click functionality of the surveillance system. All PTZ functions will be controlled by mouse movement on a cadd map. The surveillance system shall include live viewing, image retrieval and image storage. The images will be archived to a new Storage Area Network (SAN) to provide 20 days video retention. The system will provide for live viewing of the signals, motion recording and recording at different frame rates.
2. The surveillance system will monitor all floor access points such as primary corridors, building entrances or other interior points as required by the owner. The system will also provide for perimeter building coverage, parking area coverage, vehicle gates, radio tower and other exterior building areas as required by the owner. The camera images will be recorded via a Pelco NVR. The NVR will provide storage capacity for 5 days. The software will provide automatic archiving of images over 5 days for storage on the SAN. The SAN will store the images an additional 15 days.
3. All interior surveillance cameras will be high resolution TCP/IP type cameras utilizing Power over Ethernet switches for associated power requirements. All exterior surveillance cameras will be high resolution day/night type digital cameras. The cameras will be manufactured by Pelco, no substitutions.
4. The contractor will provide all software, servers, storage, licenses, installation and programming as required for a fully functional system.

D. Other Items for Coordination

1. All Cat 6 UTP or fiber optic horizontal camera cable runs will be provided and installed by the communications contractor. All underfloor and overhead communications pathways will be provided and installed by the communications contractor except if specifically noted otherwise. The security contractorwill furnish all associated UTP patch cords as well as the remaining security equipment and cabling.
2. All conduit and boxes will be provided and installed by the electrical contractor. The security contractor shall coordinate with the electrical contractor to assure the proper size box, mounting location and rough-in occur.
3. All door contacts, electronic locks and power transfer hinges will be provided and installed by the door hardware manufacturer. The security contractor shall coordinate with door hardware as required.
4. The intercom system will be an Aiphone System, no substitutions

5. Drawings and general provisions of Contract, including General and Supplementary Conditions and Division 01 Specification Sections apply to this Section.
6. The ACS shall be an extension of the Owner ACS located at the Owner's Headquarter. The Access Control System (ACS) shall consist of card readers, access control panels (ACP), and low voltage power supplies. The access control panel(s) shall be wall mounted in the MDF / IDF and connected to the city's LAN/WAN. Coordinate with Owner IT for network port, switch routing requirements. The ACS shall be monitored at Owner's Monitoring Headquarter.
7. ACS system description: ACS shall be an on-line, computer-based system for those authorized by Owner to have access to controlled areas.

1.2 Related Section Includes:

1. Section 263353: Telecommunications Uninterruptible Power Supply (UPS)
2. Section 270000: Communications
3. Section 270526: Telecommunication Grounding and Bonding
4. Section 270528: Interior Communications Pathways
5. Section 270543: Exterior Communication Pathways
6. Section 270553: Identification and Labeling of Communication Infrastructure
7. Section 271100: Communication Room Fittings
8. Section 271300: Backbone and Riser Media Infrastructure
9. Section 271500: Horizontal Media Infrastructure
10. Section 272100: Data Communication Network Equipment
11. Section 280500: Electronic Safety and Security
12. Section 281300: Access Control System (ACS)
13. Section 282300: Digital Video Surveillance System (DVSS)

1.3 REFERENCES

Section 270000 in its entirety shall be included as part of this specification.

1.4 DESCRIPTION

A. The Security Contractor shall completely coordinate all relevant work of other trades/systems including, but not limited to:

1. Door Hardware
2. Fire Alarm System
3. Electrical Systems(s)
4. Telecommunications System(s)

B. Electric Locking Mechanisms: The security contractor and door hardware contractor shall coordinate all door hardware, door and door frame design. The security contractor shall verify all specified door hardware is appropriate for the security application and verify the sequence of operations for each access-controlled opening.

C. Fire Alarm and Life Safety:

1. The security contractor shall coordinate the access control system design with the life safety consultant to ensure compliance with applicable codes and requirements. This includes, but is not limited to, the fire alarm interface, fail safe/secure locking mechanisms, delayed egress, and inter-lock doors.
2. Installation of security devices that do not comply with life Safety Code NFPA 101 shall require contractor to restore work with no charge to owner.

1.5 COORDINATION

A. Refer to General or Special Conditions.

B. Refer to Division 26, Electrical Work

C. Refer to Division 27, Telecommunications

1.6 CONTRACT DRAWINGS

A. Drawings are generally diagrammatic and are intended to encompass a system that will not interfere with the structural and architectural design of the building. Coordinate the work to avoid interferences between conduit, equipment, architectural and structural work.

B. Coordinate with architectural features, trim and millwork details, and install equipment in cabinets or other special areas as directed by A/E.

C. Drawings are based on equipment specified as the 'basis of design'. Make adjustments, modifications or changes required, due to use of other equipment, at no additional compensation.

1.7 QUALITY ASSURANCE

A. Follow Section 014000 – Quality Requirements and the following.

B. Perform work in accordance with the latest editions, revisions, amendments or supplements of applicable statutes, ordinances, codes or regulations of Federal, State and Local Authorities having jurisdiction in effect on the date bids are received. .

C. Where approval standards have been established by OSHA, Underwriter's Laboratories, ASME, AGA, AMCA, ANSI, ARI, NFPA 70, State Fire Insurance Regulatory Body, and FM, these standards shall be followed whether or not indicated on the Contract Drawings and Specifications. Include the cost of all work required to comply with the requirements of these authorities in the original proposal. Comply with ANSI C2 where applicable.

D. Comply in every way with the requirements of local laws and ordinances, the National Board of Fire Underwriters, and the National Electrical Code. Anything in the plans or specifications that does not strictly comply with the above laws, ordinances, and rules must be referred to the attention of the Engineer for a decision before proceeding. No change in the plans or specifications shall be made without full consent in writing of the Engineer.

E. Monitor and maintain quality control over manufacturers, suppliers, subcontractors, work force, site conditions, products, and services to ensure Work is of specified quality.

F. The security contractor is required to furnish and install all signage required for the access control system to adhere to local building codes and ordinances. In addition, the security contractor will provide documentation and fees required by Fort Bend County for an Electronic Lock Permit.

G. Provide all materials, equipment, and installation in compliance with the latest applicable standards from ANSI, FCC, ASTM, TIA, IEEE, NEC, NFPA, NEMA, REA, and UL. All products shall have a UL label.

H. Access Control System Contractor Qualifications:

1. Knowledge of NEC and industry security standards.
2. Must be familiar with the Fort Bend County Electronic Lock Permitting requirements and procedures.
3. 5 References for projects of equivalent scope, type and complexity of work completed within the last 5 years.
4. Install products only by qualified technicians.
5. Must be a 3xLogix certified Security System installer for installing all access control equipment.

I. Surveillance System Contractor Qualifications

1. Knowledge of NEC and industry security standards.
2. 5 References for projects of equivalent scope, type and complexity of work completed within the last 5 years.
3. Install products only by qualified technicians.
4. Must be a Pelco System certified installer for installing all surveillance equipment.

J. Requirements in reference specifications and standards are minimum for all equipment, material and work. In instances where capacities, size or other features of equipment, devices or materials exceed these minimums, meet listed or shown capacities.

K. Resolve any code violation discovered in contract documents with the A/E prior to award of the contract. After award of the contract, make any correction or addition necessary for compliance with applicable codes at no additional compensation.

L. Arrange with local and state authorities and utility companies for permits, fees and service connections, verifying locations and arrangement, and pay all charges including inspections.

1.8 MATERIALS AND WORKMANSHIP

A. Provide new materials and equipment of a domestic manufacturer by those regularly engaged in the production and manufacture of specified materials and equipment. Where Underwriter's Laboratories or other agency has established standards for materials, provide materials, which are listed and labeled accordingly. The commercially standard items of equipment and the specific names mentioned herein are intended to identify standards of quality and performance necessary for the proper functioning of the work.

B. Perform work by workmen skilled in the trade required for the work. Install all materials and equipment to present a neat appearance when completed and in accordance with the approved recommendations of the manufacturer and the best practices of the trade and in conformance with the Contract Documents.

C. Provide all labor, materials, apparatus, and appliances essential to the complete functioning of the systems described or indicated herein, or which may be reasonably implied as essential whether mentioned in the Contract Documents or not.

D. In cases of doubt as to the Work intended or in the event of need for explanation thereof, make written request for supplementary instructions to A/E.

E. Since manufacturing methods vary, reasonable minor variations are expected; however, performance and material requirements are the minimum standards acceptable. The right to judge the quality of equipment that deviates from the Contract Documents remains solely with A/E.

F. Exterior and interior raceway systems may be installed by a licensed electrical contractor. All security pathways shall meet the installtion requirements of Division 27.

G. Access Control and Intrusion Detection cable terminations and testing shall be performed only by the respective security system contractor.

H. If a part number shown in this document has been discontinued or is no longer in production, then the manufacturer's replacement part number shall be used. If there is no replacement part number, then the contractor shall notify the engineer in writing requesting instructions for an approval replacement part number.

1.9 PRODUCT DELIVERY, STORAGE AND HANDLING

A. Follow the manufacturer's directions completely in the delivery, storage, and handling of equipment and materials.

B. Store equipment in a clean, dry place, protected from other construction. While stored, maintain factory wrappings or tightly cover and protect equipment against dirt, water, construction debris, chemical, physical or weather damage, traffic and theft.

C. Adequately brace and package equipment to prevent breakage and distortion while in transit.

1.10 OPERATING INSTRUCTIONS

A. Provide the services of competent representatives of the manufacturer capable of certifying that the equipment is installed according to the manufacturer's recommendations, is operating properly, and to instruct the Owner's operating personnel during start-up and operating tests of the complete telecommunication system. Prove the operation of equipment to the satisfaction of A/E. Give at least seven days' notice to A/E prior to beginning equipment start-up.

B. Certify that these services have been performed by including a properly executed invoice for these services or a letter from the manufacturer.

C. Perform all tests outlined in Division 28.

1.11 SERVICE

A. Remove all excess material and debris. Place all security systems in complete working order before request for final review. Broom clean all areas.

B. Clean and polish all camera domes, equipment, and materials thoroughly, and return to "as new" condition.

1.12 PROJECT RECORD DOCUMENTS

A. Comply with Section 017839 - Project Record Documentation and the following.

B. Maintain a set of prints of the Contract Documents at the job site for the purpose of recording the final size, location and interrelation of all work under this Division in accordance with Section 017839 - Project Record Documentation. Mark-up this set of drawings as the job progresses to indicate "as-built" location of all equipment, including concealed conduit, equipment and the like.

C. Clearly and accurately delineate the work by dimensions on the record drawings as installed, with equipment locations identified by at least two dimensions to permanent structures.

D. The final record drawings shall be marked "AS-BUILT," and signed and dated by a certified representative of the Contractor.

E. At the conclusion of project, provide certified "AS-BUILT" drawings which shall consist of the following:

1. All drawings shall be provided on disk in a form compatible with AutoCad Release 2004. A complete set of project plans will be provided to the Contractor on disk. The Contractor will modify the drawings by placing the security equipment ID and cable information on a separate layer. All of the requested drawings will be placed on these plans so that all cable routes are to scale and provide accurate information for use in

the future when changes are made and the exact location of cables are required to avoid service interruptions.

2. A complete diagram of all security terminations in the Telecommunications Closets.
3. A complete diagram of all security power supplies, switchers, streamers, recorders, transceivers, etc.
4. A complete diagram of all security cable tray, conduits and conduit sleeves.
5. A complete diagram of all manholes including section views detailing which cable is in which manhole duct.
6. Complete wiring and interconnection diagrams for each system including, but not limited to, video streamers, power supplies, reader interface cards, input and output cards, intelligent controllers, matrix switchers, monitors, fiber transceivers, etc.

1.13 FINAL REVIEW

A. Comply with Section 017700 – Closeout Procedures and the following.

B. Obtain all necessary electronic lock permits from local authorities.

C. Prior to requesting final payment, submit final approved operation and maintenance manuals including approved submittals, test reports and "AS-BUILT" drawings. Delivery of operation and maintenance manuals is a condition of final acceptance.

1.14 GUARANTEE

A. Guarantee materials, parts and labor for all work for one year from the date of issuance of occupancy permit. During that period make good any faults or imperfections that may arise due to defects or omissions in materials or workmanship with no additional compensation and to the complete satisfaction of A/E.

1.15 WARRANTY

A. A one (1) year Product Warranty and System Assurance Warranty for this Security system shall be provided.
   1. Product Warranty
      a. The Product Warranty shall ensure against product defects for a one (1) year period. The warranty shall apply to all security system components.

1.16 SAFETY

A. The contractor shall follow the safety procedures.

   1. The contractors shall be responsible for training all personnel under their employ in areas concerning safe work habits and construction safety. The contractor shall continually inform personnel on hazards particular to this project and update the information as the project progresses.

1.17 PROJECT/SITE CONDITIONS

A. Site Visitation: Visit the site of the proposed construction to thoroughly become familiar with all details of the work and working conditions, verify all dimensions in the field, and advise A/E of any discrepancy before performing any work.

B. Space Requirements:

a. Consider space limitations imposed by contiguous work in selection and location of equipment and material. Do not provide equipment or material that is not suitable in this respect.
b. Make changes in equipment location of up to 5 feet, to allow for field conditions prior to actual installation, at no additional compensation, as directed by A/E.
c. Install all equipment requiring service so that it is easily accessible.
d. Compare the equipment sizes with the space allotted for installation before installation and make written notice of possible conflict. Disassemble large equipment to permit installation through normal room openings when required. Should written notice not be made in a timely manner, make adjustments and modifications necessary without additional compensation.
e. Timely place all equipment too large to fit through finished openings, stairways, etc.

2. Site Obstructions
a. The drawings indicate certain information pertaining to surface and subsurface obstructions, which has been taken from available drawings. Such information is not guaranteed; however, as to the accuracy of location or the completeness of the information.
b. Before any cutting or trenching operations are begun verify with A/E, utility companies, municipalities, and other interested parties that all available information has been provided. Verify locations given.
c. Should obstruction be encountered, whether shown or not, alter routing of new work, reroute existing lines, remove obstruction where permitted, or otherwise perform whatever work is necessary to satisfy the purpose of the new work and leave existing services and structures in a satisfactory and serviceable condition.
d. Assume total responsibility for and repair any damage to existing utilities or construction, whether or not such existing facilities are shown. If damaged, repair the lines at no additional compensation.

3. Cutting and Patching: Comply with Section 017329 – Cutting and Patching.
a. Submit a written request to A/E in advance of cutting or alterations.

4. Execute cutting and demolition by methods, which will prevent damages to other work and will provide proper surfaces to receive installation of repairs.

5. Restore work which has been cut or removed; install new products complying with specified products, functions, tolerances and finishes as stated in the contract documents. Provide heavy chrome-plated or nickel-plated escutcheon plates of approved pattern for penetrations of finished surface. Approved escutcheon plates are B&C No. 10 with concealed hinges.

6. Fit work airtight to conduit, sleeves and other penetrations through surfaces. For fire-rated penetrations, provide in accordance with UL 1479 and ASTM E-814 assemblies utilizing products and materials equal to the rating of all surfaces penetrated.

C. Outages: All outages to existing on-line systems shall be coordinated and approved in writing by the owner prior to outage.

D. The contractor may have to perform some work after hours such as new cable pulls through active manhole systems, outage of existing services and such.

E. The contractor shall provide and install all cross-connect cabling, connectors, coupling panels. Couplers and any other materials necessary for a complete system installation when working in existing areas to extend active circuits.

1.18 IDENTIFICATION

A. Labeling - General

1. Label all security cables, cameras, patch panel termination positions, distribution frames, card readers, and boxes.
2. Wire labels shall be clear vinyl with acrylic adhesive tape. Text shall be typed with minimum 8 point font.
3. Provide front adhesive label for individual patch panel positions. Label patch panels consecutively from bottom to top. Label shall be typed with minimum font size of 8 point.

B. Labeling – Cables

1. Labels shall be a self-laminated vinyl.
2. Labels shall have a white background for printing and a clear tab to protect the printed text.
3. Labels shall be a minimum of 1” wide and 1-1/4” long, the printed area shall be no less than ½” high.
4. Generate labels using a handheld Brady I.D. Pro-plus labeler Model ID PRO-PLUS, or equivalent.
5. Labels shall be attached to each security cable at each termination end and at all box locations.
6. Label shall be attached to fiber cable at each end and to each individual fiber at each end prior to termination.
7. Cable labels shall be placed in the following locations: on jack face plates, on cable inside back boxes, junction boxes, access points, and manholes/handholds, on cable above the terminations in the IDF and MDF, on patch panels, and every 50 feet when not inconduit.

C. Tagging of Conductors:

1. Tag all branch cables at all access locations (ends, boxes) for purpose of identifying various cameras.

2. Label text shall be printed utilizing the “SMALL” text size setting.
3. Label text shall be printed on three lines utilizing the “WIRE” setting.
4. Label shall be affixed to cable jacket no more than 1” from where jacket is stripped back to allow ease of cable identification.
5. Label shall be affixed to cable jacket by adhering the white printed portion of the label directly to the jacketing and then wrapping the clear portion of the label around and over the white printed portion to protect the printed text of the label.
6. Label shall be positioned so that it can be easily read without needing to adjust or reposition label or surrounding cabling.

D. Nameplates

1. Nameplates: Provide engraved three-layer laminated plastic nameplates with white letters on a black background.
2. Provide nameplates for the following:
3. Equipment Racks and cabinets.
4. Equipment enclosures.
5. Surveillance Cameras
6. Card Readers

E. Telecommunications Administration

1. Coverplates shall be labeled initially with an ultra fine tip black permanent sharpie and covered with “P-Touch” or approved equal.
2. Follow 280500-1.18 for labeling and color coding.

F. Security Cabinet: Floor-standing cabinet and wall-mounted cabinet.

1. Floor-standing cabinet label shall have building number, color designation for classification of security equipment, IDF number, and sequential character.
2. Center label at top of front door of cabinet.

G. Access Control Conduit Pullbox located above portal: Install engraved plastic label to cover of pullbox.

H. Conduit: Label conduits with appropriate color-coded tape.

1. Install tie wrap label tag on each conduit end point that terminates in IDF, or stubbed through floor, ceiling or wall without pullbox.
2. Hand-letter with permanent black ink, in block type letters with clear, legible letters.
3. Match label information to information in nearest J-Box label that conduit leads to.

1.19 CABLE TESTING

A. Refer to Division 27 – COMMUNICATIONS for copper multipair, copper UTP, and fiber cable testing requirements.

B. Cabling Tests - General

1. Furnish all necessary instruments and equipment required for making tests. Test all wiring for shorts, open circuits or grounding.
2. Immediately correct any defective work.
3. When entire installation has been completed, test out circuits and demonstrate that operation of system is in accordance with the Drawings.

C. Contractor Qualifications:

1. The contractor must be certified by the manufacturer of the products to be installed adhere to the engineering, installation and testing procedures, and utilize the authorized manufacturer components and distribution channels in provisioning this Project.
2. All members of the installation team must be certified by the manufacturer(s) as having completed the necessary training to complete their part of the installation.
3. Contractor shall provide five references for projects of approved equivalent scope, type and complexity of work completed within the last five years.

D. Equipment and materials supplied shall be a standard product of manufacturers regularly engaged in the manufacture and installation of access control systems and shall be the manufacturer's latest standard design. Items of the same classification shall be identical. This requirement includes equipment, modules, assemblies, parts, and components. Electrically powered equipment shall be UL approved. Electronic equipment shall meet the requirements of CFR 47 Part 15.

E. All hardware, software, firmware, and/or operating system requirements given are the minimum requirements. The Contractor's product shall meet or exceed these requirements. The product selected shall meet the operational, functional, and performance requirements specified herein. Additionally, due to the rapid advancement and antiquation of technology related products, the supplied product shall be the “contemporary technical equivalent” of that specified. “Contemporary technical equivalent” shall be based on a comparison of technology at the time of publication of specification to the technology at the time of the first product submittal. Final product approval is at the sole discretion of the Owner.

F. Assure that the "as installed" system is correct and complete per construction documents: including engineering drawings, manuals, and operational procedures in such a manner as to support maintenance and future expansion of the system.

G. Owner/Architect/Engineer retains the right to access and inspect all work during the entire duration of the project and any items that do not adhere to the standards, reference, contract, bid, or project documents will be corrected immediately at the expense of the contractor.

H. UL Compliance: Provide products that are UL-classified and labeled.

PART 2 - PRODUCTS

Not Used.

PART 3 - EXECUTION

3.1 GROUNDING AND BONDING

A. Equipment Cabinets and Racks

1. To provide electrical continuity between enclosure elements, paint-piercing grounding washers shall be used for all cabinets.
2. A horizontal busbar shall be installed at the bottom of each enclosure.
3. Each enclosure shall be provided with a minimum # 6 AWG insulated ground wire.
4. Furnish all required bonding materials and hardware manufactured for this purpose. Follow NEC bonding procedures/specifications.
5. To bond each enclosure to ground, burnish clean a one square inch area, drill, tap, apply an adequate amount of antioxidant joint compound mixed for the metal surface types affected, and bolt connectorized conductor to burnished and compounded area.

3.2 INSTALLATION

A. After racks/cabinets are installed, install all required components to support rack mounted security equipment. Extend UPS/emergency power to rack mounted equipment as required.

B. Install Access Control Panels, power supply enclosures, and security equipment distribution enclosures as specified in related sections. Attach equipment enclosures securely to walls or millwork if applicable.

C. Install all conduit, back boxes, wire and cable management as required for interconnection of security equipment, access control panels, and power supply.

D. Extend commercial/emergency/UPS power circuits to security components as required.

E. Neatly lace and dress all cables in each rack/cabinet. All wiring and cable shall be properly supported. Utilize suitable cable management devices, no tie-wraps allowed.

F. Install all components in compliance with manufacturer standard recommended practices, industry standards, and applicable codes and laws.

G. Furnish and coordinate installation of all special device back boxes and ACS ID field devices as shown on the security drawings and as specified in this section.

H. The exact installation locations of all equipment shall be coordinated and verified with the Owner prior to installation. Contractor shall notify the Owner if any location appears to be unsuitable.

I. Provide low voltage power supplies for electric locking devices and ACS ID devices and components as shown on the security drawings and specified in this Section.

J. Extend emergency/UPS power circuits as required to security equipment and power supply Enclosures.

K. Coordinate with the Fire Alarm Contractor to provide interface to the Fire Alarm System as required.

L. Coordinate with the Telecommunications Contractor for data network connections, IP address requirements, and telephone circuits as required.

M. Prepare all systems for user operation. The security system must be complete and ready to operate prior to Owner's final acceptance of the system.

N. Coordinate with the Owner for all system programming requirements.

O. Perform database programming as required to support the card reader, alarm point, and control panel configuration required.

END OF SECTION 280500

SECTION 281300
ACCESS CONTROL SYSTEM (ACS)

1.1 SUMMARY

A. Furnish and install an access control system consisting of necessary hardware, software, connecting hardware, firmware and license to provide a complete system. The access control system shall be fully integrated with the CCTV system. The access control system will be the 3XLogix Infenias Access Control System. No alternatives to the 3xLogix System will be allowed.

B. Access Control System shall consist of:

1. Keypads and card readers.
2. Credentials
3. Call Box.
4. Controller Panel.
5. Door hardware related to access control
6. Interface boards
7. Badging System
8. Visitor Badging System
9. Controller, operator and applications Software
10. Power Supplies
11. Cabling
12. Server
13. Client Workstation

C. Provide conduit, cable, patch cords, junction and pull boxes, outlet boxes, and all conduit fittings or accessories and additional equipment as required for a fully functional system.

D. Related Section Includes:

1. Section 01
2. Section 263353: Telecommunications Uninterruptible Power Supply (UPS)
3. Section 270000: Communications
4. Section 270526: Telecommunication Grounding and Bonding
5. Section 270528: Interior Communications Pathways
6. Section 270543: Exterior Communication Pathways
7. Section 270553: Identification and Labeling of Communication Infrastructure
8. Section 271100: Communication Room Fittings
9. Section 271300: Backbone and Riser Media Infrastructure
10. Section 271500: Horizontal Media Infrastructure
11. Section 280500: Electronic Safety and Security
12. Section 272100: Data Communication Network Equipment
13. Section 282300: Digital Video Surveillance System (DVSS)

1.2 REFERENCES

Section 270000 in its entirety shall be included as part of this specification.

1.3 SUBMITTALS

A. Product Data: Manufacturer's cut sheets and catalog data for each component.

B. Installation procedures.

C. Code compliance certifications.

1.4 SYSTEM OPERATION

A. The access control system is a system of card readers, electronic locking devices and contacts located on all the perimeter doors and interior doors where differing access levels are required.

B. Doors requiring after hours building entry by authorized personnel will receive a card reader.

C. Loading docks and other areas that may require after hours entry by unauthorized personnel will receive a telephone handset for automatic calling to allow someone inside the building to open a door to grant access.

D. Video monitoring will be provided at all monitored door locations, corridors, secure rooms, parking areas and vehicle access gates.

E. All perimeter doors that are to remain locked after hours will receive a door contact only to alarm the system if the door is ajar.

F. The security access system will fail-secure during a fire alarm except where magnetic locks or delayed egress devices are utilized. Where magnetic locks or delayed egress devices are used, the system will be fail-safe.

G. All interior card readers will be MultiCLASS SE readers. Lock power will be furnished by a separate power supply.

H. Vehicle entry to the Site will be controlled by access cards. In addition, a call box will be located at designated vehicle gates in the case of unauthorized access needs or gate malfunction.

1.5 CONTRACTOR DUTIES

A. Perform all work, coordination, systems integration, engineering design, and testing, and shall provide all products required in order to ensure a fully operative system and proper installation of equipment. System operability and proper installation shall be verified via completion of the acceptance test plan.

B. Provide all system documentation and submittals.

C. Provide warranty and maintenance support as specified.

D. Provide and pay for all labor, materials, andequipment.

E. Secure and pay for plan check fees, permits, fees, and licenses necessary for execution of Work as applicable for the project.

F. Provide any signage as required for the Locking Permit or City Building or Fire Code due to electronically locking the door.

G. Give required notices.

H. Comply with all codes, ordinances, regulations, and other legal requirements of public authorities that bear on performance of Work.

1.6 DESCRIPTION

A. The Security Contractor shall completely coordinate all relevant work of other trades/systems including, but not limited to:

1. Door Hardware
2. Fire Alarm System
3. Electrical Systems(s)
4. Telecommunications System(s)

B. Electric Locking Mechanisms: The security contractor and door hardware contractor shall coordinate all door hardware, door and door frame design. The security contractor shall verify all specified door hardware is appropriate for the security application and verify the sequence of operations for each access-controlled opening.

C. Fire Alarm and Life Safety:

1. The security contractor shall coordinate the access control system design with the life safety consultant to ensure compliance with applicable codes and requirements. This includes, but is not limited to, the fire alarm interface, fail safe/secure locking mechanisms, delayed egress, and inter-lock doors.
2. Installation of security devices that do not comply with life Safety Code NFPA 101 shall require contractor to restore work with no charge to owner.

1.7 COORDINATION

A. Refer to General or Special Conditions.

B. Refer to Division 26, Electrical Work

C. Refer to Division 27, Telecommunications

1.8 QUALITY ASSURANCE

A. Contractor Qualifications:

1. The contractor must be certified by the manufacturer of the products to be installed, adhere to the engineering, installation and testing procedures, and utilize the authorized manufacturer components and distribution channels in provisioning this Project.
2. All members of the installation team must be factory certified by the manufacturer(s) as having completed the necessary training to complete their part of the installation. Written confirmation of such certification by manufacturer(s) shall be submitted to the Owner if requested.
3. Contractor shall provide five references for projects completed within the last five years of approved equivalent scope, type and complexity.

B. Equipment and materials supplied shall be a standard product of manufacturers regularly engaged in the manufacture and installation of access control systems and shall be the manufacturer's latest standard design. Items of the same classification shall be identical. This requirement includes equipment, modules, assemblies, parts, and components. Electrically powered equipment shall be UL approved. Electronic equipment shall meet the requirements of CFR 47 Part 15.

C. All hardware, software, firmware, and/or operating system requirements given are the minimum requirements. The Contractor's product shall meet or exceed these requirements. The product selected shall meet the operational, functional, and performance requirements specified herein. Additionally, due to the rapid advancement and antiquation of technology related products, the supplied product shall be the “contemporary technical equivalent” of that specified. “Contemporary technical equivalent” shall be based on a comparison of technology at the time of publication of specification to the technology at the time of the first product submittal. Final product approval is at the sole discretion of the Owner.

1.9 WARRANTY

A. Warrant all equipment and work for a period of not less than one year following formal notice of substantial completion or commencement of beneficial use. The warranty shall ensure that the installed equipment will conform to its description and any applicable specifications, and shall be of good quality for the known purpose for which it is intended. The warranty shall allow for replacement or repair at the discretion of the Engineer or Owner’s Rep and shall include all upgrades for firmware and/or operating systems.

B. Software Licenses

1. Required software licenses shall be identified and supplied by the Contractor.
2. All software licenses and warranties shall be registered in the name of Fort Bend County.

C. Contractor Qualifications:

1. The contractor must be certified by the manufacturer of the products to be installed, adhere to the engineering, installation and testing procedures, and utilize the authorized manufacturer components and distribution channels in provisioning this Project.
2. All members of the installation team must be factory certified by the manufacturer(s) as having completed the necessary training to complete their part of the installation. Written confirmation of such certification by manufacturer(s) shall be submitted to the Owner if requested.
3. Contractor shall provide five references for projects completed within the last five years of approved equivalent scope, type and complexity.

D. Equipment and materials supplied shall be a standard product of manufacturers regularly engaged in the manufacture and installation of access control systems and shall be the manufacturer's latest standard design. Items of the same classification shall be identical. This requirement includes equipment, modules, assemblies, parts, and components. Electrically powered equipment shall be UL approved. Electronic equipment shall meet the requirements of CFR 47 Part 15.

E. All hardware, software, firmware, and/or operating system requirements given are the minimum requirements. The Contractor's product shall meet or exceed these requirements. The product selected shall meet the operational, functional, and performance requirements specified herein. Additionally, due to the rapid advancement and antiquation of technology related products, the supplied product shall be the “contemporary technical equivalent” of that specified. “Contemporary technical equivalent” shall be based on a comparison of technology at the time of publication of specification to the technology at the time of the first product submittal. Final product approval is at the sole discretion of the Owner.

1.10 WARRANTY

A. Warrant all equipment and work for a period of not less than one year following formal notice of substantial completion or commencement of beneficial use. The warranty shall ensure that the installed equipment will conform to its description and any applicable specifications, and shall be of good quality for the known purpose for which it is intended. The warranty shall allow for replacement or repair at the discretion of the Engineer or Owner’s Rep and shall include all upgrades for firmware and/or operating systems.

B. Software Licenses

1. Required software licenses shall be identified and supplied by the Contractor.
2. All software licenses and warranties shall be registered in the name of Fort Bend County.

1.11 PROCUREMENT

A. Procure equipment specified in this document in order to ensure that the technology is acquired in a timely fashion, but not outdated by the installation date.

B. The Contractor shall not purchase any materials requiring submittals until the Engineer approves the submittal for that material.

C. All products shall be purchased not earlier than 6 months prior to installation.

1.12 DOOR PERMITTING

A. Contractor is responsible for submitting permit drawings for approval by the Fort Bend County permitting office.

B. Contractor is responsible for coordinating the final inspection with the Fort Bend County permitting office.

C. Contractor is responsible for all fees and materials required for door permitting.

D. Contractor shall notify Engineer is door configuration is not code compliant.

PART 2 - PRODUCTS

2.1 MANUFACTURERS

A. Honeywell is the only approved manufacturer for the Access Control System.

2.2 ACCESS CONTROL AND MANAGEMENT SYSTEM SOFTWARE

A. The access control system software shall be 3xLogix Infinias System, Current Edition. No substitutions will be allowed.

2.3 INTELLIGENT FIELD PANELS (IFP's)

A. The Intelligent Field Panel shall be connected to the security host, by means of a TCP/IP network. It shall respond to commands from the host. Each IFP shall connect into the TCP/IP network through an Ethernet HUB. The IFP shall forward to the host information regarding access, status and alarms, which the IFP has gathered from the readers and sensor devices that the IFP controls. The IFP shall meet or exceed the following functional requirements: Each IFP shall be identifiable from the central host by means of a unique IP address. IFPs and associated modules and components shall be manufactured by Honeywell, no substitution.

B. The IFP shall operate normally as an online device.

C. In its offline mode, the IFP shall be able to save (buffer) 35,000 badge transactions.

D. When the IFP returns to online mode from its stand-alone (offline) mode of operation, the transactions it stored shall be transmitted to the host during the subsequent polling sequences. Such transmission shall not impede current transaction processing. Historical activity must be differentiated from current activity.

E. Any portal controlled by the IFP shall be capable of being opened or closed by the issuance of a command from the host.

F. Each IFP shall be capable of supporting up to 32 card readers for badge access.

G. The IFP shall support readers, which utilize smart card technology.

H. Time shall be generated locally at each IFP, and the local time shall be capable of being updated for accuracy from a host master clock at any time.

I. The IFP shall be in current factory production.

J. The IFP shall include power backup in the form of re-chargeable batteries. In the event of an AC power failure, the battery backup shall protect any data or software stored in the memory of the IFP for not less than 1 hour.

K. The IFP shall be installed with capacity to connect one additional card reader for each 3 card readers installed.

L. Operation from 2 to +43 degrees Celsius, at up to 85% non-condensing relative humidity.

M. Provide each IFP with an enclosure. Enclosures shall be rack mounted unless otherwise noted on the contract documents. Provide each enclosure with an integral tamper alarm switch.

N. The IFP shall be capable of maintaining a database of badge holders, badge holder PINs (user definable) and their privileges. During degrade mode, the IFP will continue to grant appropriate accesses for individuals based on this database and shall not degrade the access selection rules. IFPs are to be capable of maintaining at least 7,800 badge holders.

O. The IFP shall communicate via an Ethernet TCP/IP data interface.

P. Component models:

1. Intelligent Field Panels PW3K1IC
2. Enclosure PW5K2ENC2
3. Enclosure power supply PW6K2E2PS
4. Dual Reader Module PW6K1R2
5. Input Module PW6K1IN
6. Output relay Module PW6K1OUT

2.4 CARD READERS:

A. Provide MultiCLASS Multi-Technology Card readers, NO EXCEPTIONS, as shown on the drawings. Card readers shall be "single-package" type, combining controller, electronics and antenna in one package, in the following configurations:

B. RP40 - MultiCLASS SE Reader, Wall Mounting (Single-Gang Mounting Applications):

1. Provide “single-gang” mounting style contactless smart card readers for wall mounting, vehicle stanchions and pedestals, and where shown on plans.
2. The reader shall be of potted, polycarbonate material, sealed to a NEMA rating of 4X (IP65).
3. The reader shall contain an integral magnet for use with an external magnetic reed switch to provide tamper protection when connected to an external alarm system.
4. The reader shall be FCC and CE certified, and shall conform to the following ISO Standards: 15693 (read-only), 14443A (CSN read-only), and 14443B2 (read-only).
5. Include Open Supervised Device Protocol (OSDP)
6. Card Compatibility: 13.56 MHz – 125KHz
7. The reader shall have an approximate read range of 2”- 4.5” when used with the compatible access card.
8. The reader shall require that a card, once read, must be removed from the RF field for one second before it will be read again, to prevent multiple reads from a single card presentation and anti-passback errors.
9. The reader shall have a Wiegand output port and shall operate under internal control for read-only access control applications.
10. The reader shall have separate terminal control points for the green and red LED’s, and for the audible indicator.
11. The reader shall have multiple LEDs for increased visibility.
12. The reader shall have an audio transducer capable of providing unique tone sequences for various status conditions.
13. The reader shall have a configurable hold input, which when asserted shall either buffer a single card read or disable the reader, until the line is released. This input may be used for special applications or with loop detectors.
14. Access control data shall be protected using 64-bit diversified security keys, encrypted RF data transmission, and mutual authentication using a proprietary symmetrical key-based algorithm.
15. The reader shall have flash memory to allow future feature enhancements to be added in the field.
16. The reader shall have a lifetime warranty against defects in materials and workmanship.
17. Color shall be black.
18. HID RP40, no substitutions.

C. RP15 - Contactless Smart Card Reader, Special Mounting (applications with a minimum of mounting space) Provide “surface” mounting style contactless smart card readers for door mullions, special minimum-space mounting configurations, and where shown on plans.

1. The reader shall be of potted, polycarbonate material, sealed to a NEMA rating of 4X (IP65).
2. The reader shall be FCC and CE certified, and shall conform to the following ISO Standards: 15693 (read-only), 14443A (CSN read-only), and 14443B2 (read-only).
3. Include Open Supervised Device Protocol (OSDP)
4. Card Compatibility: 13.56 MHz – 125KHz
5. The reader shall have an approximate read range of 1”- 3” when used with the compatible access card.
6. The reader shall require that a card, once read, must be removed from the RF field for one second before it will be read again, to prevent multiple reads from a single card presentation and anti-passback errors.
7. The reader shall have a Wiegand output port and shall operate under internal control for read-only access control applications.
8. The reader shall have separate terminal control points for the green and red LED’s, and for the audible indicator.
9. The reader shall have multiple LEDs for increased visibility.
10. The reader shall have an audio transducer capable of providing unique tone sequences for various status conditions.
11. The reader shall have a configurable hold input, which when asserted shall either buffer a single card read or disable the reader, until the line is released. This input may be used for special applications or with loop detectors.
12. Access control data shall be protected using 64-bit diversified security keys, encrypted RF data transmission, and mutual authentication using a proprietary symmetrical key-based algorithm.
13. The reader shall have flash memory to allow future feature enhancements to be added in the field.
14. The reader shall have a lifetime warranty against defects in materials and workmanship.
15. Color shall be black.
16. HID RP10, no substitutions.

2.5 FIELD DEVICES

A. Credentials: Provide MultiClass 13.56 MHz, single-coil, contactless smart card with a minimum of 16k bits. Quantity of application areas to be determined by owner prior to ordering. Credential shall be pre-programmed by the manufacturer and include location on front for artwork and photo ID. Back to be plain white with gloss finish. Use 26-bit or 37-bit card as directed by owner. Additional card information to be coordinated with owner prior to ordering.

B. Electric Power Transfer: This item is being furnished under section 08710.

C. The electrical power transfer shall be Von Duprin #EPT-10 or an approved equivalent.

D. Electric Lock: This item is being furnished under section 08710. The electric lock shall be a mortise-type lock (Schlage model #L9080EU-RX or equal). The lock shall include the following minimum features: :

1. Replaceable breakaway spindle
2. Solid stainless steel 1.5" deadbolt with 1" throw.
3. Reversible handing without disassembly (lock case is not required to be opening in order to reverse).
4. Universal lock chassis.
5. Free-wheeling lever to resist force when locked.
6. Independent heavy duty spring cage for lever support.
7. Interchangeable core compatible with master keying, grand master keying and construction keying. Furnish core that is compatible with existing HAS Master cores (Best Series V Core).
8. Furnish with ADA compliant lever set that is consistent with building standards.
9. Lockset shall include request-to-exit feature and fail secure design.
10. Include a switch for monitoring of the retractor crank. Switch to be activated when rotation of the lever rotates the retractor hub.
11. Inside lever must allow immediate egress.

E. Magnetic Lock: Provide magnetic lock complete with necessary mounting brackets, adapter plates, and mounting hardware at door locations as indicated on the prints. Locks shall have the following features and characteristics:

1. Construction - lock body constructed of steel with aluminum finish. Strike plate constructed of 1/2" cadmium plated steel.
2. Holding force - 1200 lbs. or greater for doors without panic hardware, 500 lbs. or greater for doors equipped with panic hardware.
3. Mounting - surface mounted on frame and door. Provide brackets and Adapters as required.
4. Power - 24 VDC, not more than 0.2 amps for 500 lb. Units and not more than 0.5amps for the 1200 lb. units.
5. Door Status Sensing - Dry contact closure to the Intelligent Field Panel or Reader/or reader controls to indicate that the magnetic bond is present between the lock and the strike plate.
6. Remote Control - Accept control via power interruption from the Intelligent Field Panel or reader (or reader controller) to lock/unlock the door.
7. Locks shall be fail safe.

F. Door Position Switch: This item is being furnished under section 08710. Provide high security magnetic door contacts at door locations as indicated on the drawings. Door contacts shall have the following features and characteristics: :

1. Construction - totally encapsulated brushed housing.
2. Life Expectancy - Greater than 10,000,000 cycles.
3. Gap distance - 5/8" or greater for contacts on pedestrian doors; 2" or greater for overhead doors.
4. UL listing - UL listed 634 for use with security systems.
5. Door Contacts - The contacts shall be recessed, normally closed with a wide gap.
6. Provide supervision for all door contacts.
7. Pedestrian doors (Sentrol #1078 or equal).
8. Roll-up doors (Sentrol #2025A or equal)

G. Hold-Up Button

1. Concealed finger-operated switch for activating alarm signal.
2. The switch shall be capable of being a latching or non-latching device.
3. The hold-up button shall be furnished with a reset key in case of latching operation.
4. Use Ademco #269R or equal).

H. Panic Hardware with Contact: This item is being furnished under section 087100. Panic hardware

is to be suitable for emergency/fire exit. They are to be Push/Crash type with integral electric lock and request-to-exit feature.

I. Lock Power Supply: Electric Locks shall be powered by an external 24VDC power supply. The following is the minimum functional requirements:

1. The power supply shall furnish regulated 24VDC @ 10A and shall be U.L. class 2 listed.
2. 16 separate output fuses shall be provided to divide the load. The power supply shall have the ability to add additional fuses as required.
3. LED'S shall monitor zone status (voltage/no voltage) and slide switches shall be provided to connect or disconnect the load from power.
4. The power supply shall be supplied complete requiring only 120VAC to the fused input and shall be supplied in a lockable enclosure that can be wall mounted.
5. The power supply shall be provided with emergency release terminals that allow the release of all devices upon activation of the fire alarm system.
6. The power supply cabinet shall be provided with a tamper switch.
7. Furnish unity with large enclosure.
8. Furnish the power supply with an ethernet network module for monitoring over the network (Altronix #LINQ2 or equal). Furnish with Cat 6 copper patch cord. Coordinate exact cord length and color.
9. The power supply shall be Altronix #eFlow104NX16 or equal).

J. Panel Directory: Provide a directory for each Access Control Controller Panel. Directory shall list all card access components and the respective ports. It shall contain the Controller Panel name and IP address. The directory must be typed and mounted to the inside front door of the ISC power supply panel in a permanent, clear Lexan card holder.

K. INTERCOM PHONE SYSTEM (Aiphone IX Series 2).

1. The information call box phone shall be an ADA compliant, with cast metal raised letters and Braille signage, with an LED indicator for the hearing impaired.
2. It shall be a hands-free phone.
3. It shall include 1-button for ring-down function and full duplex 2-way communication.
4. It will contain a built-in auto-dialer that can dial six (6) different numbers.
5. The phone will utilize power over ethernet (PoE, 802.3af), local 19-27VDC.
6. The information phone shall include a vandal resistant stainless steel faceplate and metalbutton.

7. The information phone shall include 3 auxiliary inputs and 3 auxiliary output, dry contact.
8. Provide VOIP information phone with PoE ethernet extender when cable distance exceeds 250LF.
9. Programming of the phone can be done with non-volatile flash memory programming and configuration through Web GUI.
10. Management and Operation via HTTPS, DHCP and static IP, remote automatic software upgrade,
11. centralized monitoring status LED.
12. Upon activation of the INFORMATION button on the communication devices, the following function shall immediately occur:
    a. Dial to the operator console (or up to five additional locations as determined by owner).
    b. A signal will be sent thru the access control system which will pull up the associated pre- set camera.
    c. The operator can grant access thru the phone system to open the associated controlled portal allowing access into the facility.

2.6 WIRING

A. Refer to Section 280513 – Conductors and Cables for Electronic Safety and Security.

PART 3 - EXECUTION

3.1 INSTALLATION

A. Install work following drawings, manufacturer's instructions and approved submittal data.

B. The access control components shall be wall or rack mountable and installed in lockable cabinets or within access controlled equipment rooms.

C. The contractor is responsible for all Fort Bend County Permitting requirements including, but not limited to, fees, signage, drawing submission, field verification, etc.

D. Provide a directory for every Controller Panel. The directory must include the following minimum information: Controller Name, location and room number; IP Address, identification of each card connected, each I/O connected and the associated port in the panel; where a board is installed in a port, provide the corresponding card reader name and channel.

E. Provide a nameplate on the front door for all Controller Panels, power supplies, equipment enclosures, etc. The nameplate shall be three-layer lexan tag.

F. All cable ends must have a name tag. Refer to Section 280500 – Common Work Results for Electronic Safety and Security.

G. Locate all supervised door position switches on the open side of the door at the top (not on the hinge side). Refer to detail in the drawing package.

H. All power supplies and Controllers shall be hard wired. Do not use plug-in power supply.

I. Provide fire alarm interface to tie the Access Control System panels into the fire alarm system at all locations using a delayed-egress or magnetic locking device. Upon alarm by the fire alarm system, the doors in the fire alarm zone and adjacent zones shall fail-safe. Provide the necessary fire alarm points, and modules as required to assure proper operation and maintain UL listing of the system. All fire alarm panel modifications must be provided by a certified fire alarm system

J. representative.

K. Provide alarm points on the Controller panel for the associated card reader or keypad and electric lock power supply panels. The power supply panels shall send an alarm to the controller in the following cases: Power Failure, Low Battery, Tamper.

L. Provide connection for the information phone into the access control alarm input and output relay boards as required to provide the functionality noted.

M. Provide connection from all panic stations into the access control alarm input and output relay boards as required to provide the functionality noted.

N. Install each Controller and power supply panel so that the maximum height is 7’-0” AFF to the top of the panel and the minimum height is 18” AFF to the bottom of the panel.

O. Installation of equipment and devices that pertain to other work in the contract shall be closely coordinated with the appropriate subcontractors.

P. Install all card readers with black plexiglass backing. Engrave card reader ID on plexiglass. Use minimum 24 pt font. Submit sample for approval prior to installation.

Q. All plenum wiring is to be installed parallel and perpendicular to the building structure. Install wiring tight up against structure for protection. Cable shall be bundled on a maximum of 2’-6” and secured to the structure at a maximum of 5’ on center. Bundling and support shall be with plenum rated Velcro cable ties and cat 5 rated hangars. Security pathways may be shared with communications. Security cabling to always be installed in the communications cabletray system where available. Refer to the communication drawings for cabletray locations and routes.

R. Provide all components of the Access Control System, as listed herein and shown on the contract drawings, with licenses, software and hardware, as required to make the system fully functional and programmable with the Access Control System.

3.2 TRAINING

A. The contractor shall provide training of the Access Control System. The training shall be provided by a CISCO factory representative. A certified distributor is not an acceptable instructor for training. Training shall include all software components related to access control and associated surveillance package components.

B. Training times, days and location shall be coordinated with the Owner personnel a minimum of three weeks in advance of the training session.

C. The contractor shall provide a minimum of two (2) 4-hour training sessions.

3.3 FIELD QUALITY CONTROL

A. Provide services of manufacturer's authorized representative to provide all on-site supervision of installation of complete access control system installation, perform complete functional test of

system, and submit written report attesting to proper operation of completed system.

3.4 SPARE PARTS

A. Provide 10% spare equipment of everything listed in Section 2 (this section) rounded up to nearest whole number. For example, 41 card readers would require 5 spares.

END OF SECTION 281300

SECTION 282300
DIGITAL VIDEO SURVEILLANCE SYSTEM (DVSS)

1.1 SUMMARY

A. Furnish and install closed circuit television (CCTV) components including all software, licenses and hardware required to make the system a fully functional Pelco Digital Sentry System.

B. The CCTV System shall consist of:

1. Camera, lens, housing
2. Control Equipment.
3. Power Supply
4. Monitoring System
5. Cabling
6. Server
7. Client Workstation
8. Storage Server with storage capacity hard drive

C. Provide conduit, cable, patch cords, connectors, junction and pull boxes, outlet boxes, and all conduit fittings or accessories and additional equipment as required for a fully functional system.

D. Drawings and general provisions of Contract, including General and Supplementary Conditions and Division 01 Specification Sections apply to this Section.

E. This section includes Specifications for Digital Video Surveillance System (DVSS) field devices, video storage system, and system integration and programming as required by Owner.

F. Cameras will be recorded 24 hours/day, 7 days/week for duration of 30 days. Cameras will compatible with Owner's existing DVSS, High Definition (HD), Internet Protocol (IP), H.264 compression.

G. Outdoor field devices will be specified for use in outdoor environment and be weather and vandal resistant.

H. Cameras shall be connected to the new data network provided as part of this project and integrated with the Owner's overall data network and DVSS system.

I. Cameras shall be powered via POE from the network switch or external POE injector inside the MDF/IDF. The DVSS devices will be monitored and managed by Owner's General Services Division (GSD).

J. These Specifications may include components that are not required. Use drawings to determine the quantities to be installed. Include in the original bid, all equipment, software, cabling, connectors, transformers, relays, etc., whether specified here or not, such that said bid fulfills the intent of these Specifications and renders these systems functional and fully operational.

K. Contractor shall provide all required licenses, including any required licenses for the head-end at existing Owner's monitoring Headquarter.

1.2 REFERENCES

Section 270000 in its entirety shall be included as part of this specification.

A. Related Sections:

1. Section 01
2. Section 263353: Telecommunications Uninterruptible Power Supply (UPS)
3. Section 270000: Communications
4. Section 270526: Telecommunication Grounding and Bonding
5. Section 270528: Interior Communications Pathways
6. Section 270543: Exterior Communication Pathways
7. Section 270553: Identification and Labeling of Communication Infrastructure
8. Section 271100: Communication Room Fittings
9. Section 271300: Backbone and Riser Media Infrastructure
10. Section 271500: Horizontal Media Infrastructure
11. Section 272100: Data Communication Network Equipment
12. Section 280500: Electronic Safety and Security
13. Section 280500: Electronic Safety and Security
14. Section 281300: Access Control System (ACS)
15. Section 282300 - Digital Video Surveillance System (DVSS)

1.3 DEFINITIONS

A. ANSI – American National Standards Institute

B. EIA – Electronics Industries Alliance

C. IEEE – Institute of Electrical and Electronic Engineers

D. ISO – International Organization for Standardization

E. Multi-path – The possible multiple routes of a single source of RF energy due to reflection, refraction, or diffraction.

F. NEC – National Electrical Code

G. NEMA – National Electrical Manufacturing Association

H. UL – Underwriters Laboratories American National Standards Institute:

1.4 SUBMITTALS

A. Requirements: Provide Shop Drawings and Equipment Submittals for all equipment shown on drawing or as specified herein. In addition, provide the following information complete, and in the manner described herein:

B. Shop Drawings: Indicate dimensions, reinforcement, size and locations of openings, and accessory locations for precast manholes.

C. Product Data: Submit for all products.

D. Manufacture certifications that you have been trained and are authorized to install DVSS components.

E. Manufacturer's Installation Instructions: Submit application conditions and limitations of use stipulated by Product testing agency specified under Regulatory Requirements. Include instructions for storage, handling, protection, examination, preparation, and installation of Product.

F. Submit plan and section drawings detailing proposed vault specifications.

1.5 COORDINATION

A. Refer to General or Special Conditions.

B. Refer to Division 26, Electrical Work

C. Refer to Division 27, Telecommunications

1.6 QUALITY ASSURANCE

1.7 CONTRACTOR QUALIFICATIONS

A. Must be a certified and currently registered Video Insight Channel Partner capable of issuing a numbered registration certificate for the entire security system.

B. All members of the installation team must be certified by the manufacturer as having completed the necessary training to complete their part of the installation. Resumes of the entire team should be provided along with documentation of completed training courses.

C. Must provide five (5) references for projects of equivalent scope, type and complexity of work completed within the last 5 years.

1. The contractor must be certified by the manufacturer of the products to be installed adhere to the engineering, installation and testing procedures, and utilize the authorized manufacturer components and distribution channels in provisioning this Project. Submit manufacturer certification as part of Submittals 1.4 above.
2. All members of the installation team must be certified by the manufacturer(s) as having completed the necessary training to complete their part of the installation.
3. Contractor shall provide five references for projects of approved equivalent scope, type and complexity of work completed within the last five years.

D. Equipment and materials supplied shall be a standard product of manufacturers regularly engaged in the manufacture and installation of DVSS systems and shall be the manufacturer's latest standard design. Items of the same classification shall be identical. This requirement includes equipment, modules, assemblies, parts, and components. Electrically powered equipment shall be UL approved. Electronic equipment shall meet the requirements of CFR 47 Part 15.

E. All hardware, software, firmware, and/or operating system requirements given are the minimum requirements. The Contractor's product shall meet or exceed these requirements. The product selected shall meet the operational, functional, and performance requirements specified herein. Additionally, due to the rapid advancement and antiquation of technology related products, the supplied product shall be the “contemporary technical equivalent” of that specified. “Contemporary technical equivalent” shall be based on a comparison of technology at the time of publication of specification to the technology at the time of the first product submittal. Final product approval is at the sole discretion of the City.

F. Assure that the "as installed" system is correct and complete per construction documents: including engineering drawings, manuals, and operational procedures in such a manner as to support maintenance and future expansion of the system.

G. Owner/Architect/Engineer retains the right to access and inspect all work during the entire duration of the project and any items that do not adhere to the standards, reference, contract, bid, or project documents will be corrected immediately at the expense of the contractor.

H. UL Compliance: Provide products that are UL-classified and labeled.

PART 2 - PRODUCTS

2.1 MANUFACTURERS

A. The only approved camera manufacturer is Pelco, no substitutions allowed.

B. The only approved Video Management System in Video Insight. No substitutions allowed.

2.2 VIDEO SURVEILLANCE MANAGEMENT SYSTEM (VSM) SOFTWARE:

A. The video surveillance and retrieval system software shall be Video Insight 'VI Monitor 6 Video Management Software, latest version. This shall be an enterprise VMS Client that allows centralized IP camera viewing and management from any server.

B. Furnish all software, hardware and software licenses as required for camera quantity installed including one (1) server with storage array and six (6) client station licenses with capacity for 25% camera growth.

2.3 VIDEO MANAGEMENT (VSM) SYSTEM HARDWARE WITH STORAGE CAPACITY

A. The server shall be the Video Insight Dell Power Edge Rack Mount Surveillance Server (Video Insight #NVR-R-1-1-6TB). No substitutions will be accepted.

B. The server shall include 6TB of total storage capacity with Intel C222 chipset installed in 1RU of rack space. Furnish server with 20" flatscreen monitor, power cable and associated licenses for fully functional system. This unit shall include a 3-year warranty and all associated licenses and programming as needed for a fully functional system.

2.4 CAMERAS

A. The information listed below outlines the general requirements for the CCTV camera. Refer to the Camera Schedule in the contract drawings for specific model numbers. The model number represents the exact functions, performance the features required. The contractor may submit and equivalent model of the same manufacturer to the one specified in the contract drawings.

B. General Camera Requirements:

1. Provide all cameras with variable focal length lens with automatic iris control.
2. The exterior camera shall include a thermostatically controlled heater or a pressurized IP66 housing. The housing color shall be coordinated with surroundings. All exterior cameras shall be true day/night.
3. For cameras requiring Wide Dynamic Range, Range shall be 120dB maximum and 102dB typical.
4. All day/night cameras shall include automatic IR-cut filter removal.
5. All cameras shall be provided with the appropriate mounting hardware and adapter plates for the location in which they will mount. For flush ceiling, provide with ceiling tile mount support adapter and security chain from camera to structural steel. The contractor is required to coordinate the exact mounting height and mount type with architectural and structural features.

6. Coordinate all housing finishes with architect prior to ordering any products. For this project, generally the finishes for all interior cameras will be white housing and mounting hardware and all exterior cameras will be gray housing and mounting hardware. However, where ceiling finishes vary in color, the housing will vary to match the ceiling following architectural coordination. All interior cameras to have smoked dome and all exterior cameras to have clear dome.
7. All cameras shall include motion detection capability.

C. IP Cameras shall meet the following requirements:

1. All high definition (HD) cameras shall be high resolution with a minimum of 1920 x 1080 picture elements. The camera shall have a digital backlight compensation and automatic gain control (AGC) capability.
2. The cameras shall be 1/4 or 1/3 inch with progressive scan RGB CMOS image sensor. The camera shall produce video streams in H.264 and Motion JPEG.
3. It shall be capable of manual camera adjustments from +180° to -140° pan, ±75° tilt and
4. ±100° rotation.
5. Auto back-focus requirement can configure for auto back-focus periodically.
6. The cameras shall utilize H.264, MPEG-4 and MJPEG compression formats. The camera must have built-in multicasting capability, motion detection/alarm output, progressive scan and buffer memory for pre- and post-alarm.
7. The camera shall be capable of single or dual video streams and shall include manual camera adjustments up to 360° pan, 160° tilt and 340° rotation. The output shall be a 100/10 Base-T (RJ-45) connector and the camera power shall be compatible with Power over Ethernet IEEE 802.3af.
8. The cameras shall be capable of 30fps rate in all resolutions for SD thru 2MP cameras and 20fps for over 2MP cameras. Both the frame rate and bandwidth shall be controllable in each compression format.
9. All IP cameras shall support the following protocols: TCP/IP, DHCP, RTP and NTP, FTP, HTTP, HTTPS, RTSP, SMTP, SSL/TLS.

D. The individual camera types, as defined by the Design Drawings, shall include the following camera and equipment:

2.5 MONITORS

A. All major controls, including brightness, contrast, horizontal hold, vertical hold, and power ON/OFF shall be on screen display.

B. Linearity shall be less than 8% horizontal and vertical linearity shall be less than 7%.

C. Video input and output connectors shall permit monitors to be used singly, or to be connected in a “loop-through” configuration with other monitors.

D. Monitor shall be high definition LCD, color, powered by 120VAC with minimum 1280 x 1024 SXGA resolution, max contract ratio 500:1, max brightness 400 Cd/mz.

E. Monitor shall have a quick start circuit so that an image shall be produced on the screen instantly.

F. The equipment room monitor shall be 20" flat screen type. The work station monitor shall be 24" flat screen 'planar' type.

2.6 CAMERA POWER SUPPLIES

A. All interior and exterior cameras shall be IP based and shall utilize the PoE network switch for power.

PART 3 - EXECUTION

3.1 CAMERAS

A. Install cameras as shown on the Design Drawings. Wall or ceiling mounts shall be anchored/braced as required, at a height which shall allow for camera repositioning. Coordinate mounting heights with the Owner and/or the Engineer.

B. All exposed video cabling from wall to camera shall be neatly dressed and wrapped in black spiral plastic sheath. Route all cables concealed.

C. Provide final termination of power to camera as required, and/or control cables, and terminate at the CCTV monitoring equipment locations as designated by the Design Drawings. Inspect, test, and clean all camera equipment after installation.

D. Lens sizes specified within this Section are provided for what is considered to be the "optimum" field of vision. However, to ensure the correct camera field of vision, provide adjustment of each camera in coordination with the Owner and/or the Engineer.

E. Provide for one adjustment after installation for each camera and lens as a part of the Bid and ensure that the cable guidelines are followed to allow maximum distance for relocation.

F. Ensure that wire supports for ceiling tiles are adequate for all ceiling mounted cameras.

3.2 VIDEO DISTRIBUTION QUALITY ASSURANCE

A. Contractor shall test the video distribution channel from every camera to the input of the distribution amplifier (see figure).

IDF ROOM

B. The following test parameters shall be used to qualify the installation of the new camera and CCTV cable.

3.3 TESTING

A. On-Site Acceptance Testing and Commissioning Service:

1. Prepare the Acceptance Test Format for acceptance by the Owner and/or the Engineer prior to commencement of acceptance testing.
2. Perform these on-site acceptance tests with witness by the Owner and/or the Engineer, providing all personnel and equipment necessary to perform these tests.
3. Provide a hard copy of all system points tested, as well as a letter certifying 100% completeness and operation of this system, with each device listed and the results of its operational testing (passed or failed).
4. Upon completion of testing, the Contractor and the Owner and/or the Engineer shall sign the Acceptance Test forms documenting system completion and acceptance. If acceptable by the Owner and/or the Engineer, minor discrepancies will be resolved under project warranties.

3.4 OPERATOR INSTRUCTIONS

A. Provide a complete and comprehensive operator and system administration training program to security personnel. Training plan must be submitted for approval prior to commencing training.

1. Provide one (1) 4-hour session for operator training.
2. Provide one (1) session for technical training on all hardware installed.

B. Conduct operator training on all systems prior to system acceptance. Training shall be performed for two operator levels, and shall include four hours dedicated instructor time for Level 1 training, and eight hours dedicated instructor time for Level 2 training.

1. Level 1: Basic data display and interrelation of addresses, device controls and displays, printouts requesting all data displays, and using the system.
2. Level 2: Total System Programming. This level of training shall include installation of all other programs and program changes specified herein to be keyboard programmable.This training shall include a complete understanding of all application packages, the custom written data file and user programs, and the ability to write and change new and existing specified programs. Trainer shall review and use documentation, as specified.

C. Provide the Owner with videotaping (DVD format) of all training sessions. Provide two copies of video tapes of all final training sessions.

3.5 COMMISSIONING SERVICES

A. Program system and perform all required operational checks to ensure that the system is functioning in full accordance with these Specifications.

B. Train all personnel in accordance with the provisions herein. Training of all Owner designated employees shall be completed prior to acceptance testing. Data input for system operation shall be required as preparation for user training.

C. System programming should be complete, meeting all user-defined requirements, at time of system acceptance.

3.6 FIELD QUALITY CONTROL

A. Provide services of manufacturer's authorized representative to provide all on-site supervision of installation of complete CCTV system installation, perform complete functional test of system, and submit written report attesting to proper operation of completed system.

END OF SECTION 282300

28 31 01

FIRE ALARM AND SMOKE DETECTION SYSTEM

PART 1 - GENERAL

1.01 SCOPE

A. Where there is an existing fire alarm system it will be expanded upon to provide proper coverage of signaling and detection per applicable codes.

B. The contractor shall remove the existing field devices (where applicable) from the building prior to demolition. The contractor shall provide new field equipment to supplement the quantity of existing devices to meet applicable building codes for the new construction. In new construction, all devices and equipment shall be new.

C. The contractor shall furnish and install a complete distributed microprocessor based 24VDC, electrically supervised, MULTIPLEX, integrated fire alarm and voice evacuation (where applicable) system as specified herein and indicated on the drawings. The system shall include, but not be limited to, all control equipment, remote transponders, printer, power supplies, signal initiating and signaling devices, conduit, wire, fittings, and all other accessories required to provide a complete and operable system.

D. The system shall operate as a non-coded, continuous sounding system which will sound alarm devices until manually silenced, as herein specified.

E. The system shall be wired as a Class B supervised system for all circuits.

F. The installing contractor shall include at minimum 6 months of monitoring services. Monitoring services shall be provided by the authorized Fort Bend County fire alarm services provider.

1.02 CODES AND STANDARDS

A. The system shall comply with the applicable Codes and Standards as follows:

1. National Electrical Code - Article 760.
2. National Fire Protection Association Standards: NFPA 70 NEC
3. NFPA 72 National Fire Alarm Code (2013) NFPA 90A Air Conditioning
4. NFPA 101 Life Safety Code UL 1971 Visual Devices ANSI 117.1 Visual Devices
5. Local & State Building Codes (Including all adopted amendments)
6. Texas Accessibility Standards (TAS) 05 Americans with Disabilities Act (ADA)
7. Requirements of Local Authorities having Jurisdiction

8. Underwriters Laboratory Requirements and Listings for use in Fire Protective Signaling Systems as follows:

9. UL 864 Control Panels (9th Edition) UL 268 Smoke Detectors - Systems UL 268A Duct Smoke Detectors

10. UL 521 Heat Detectors

11. UL 228 Door Holder-Closers

1.03 INSTALLING CONTRACTOR'S RESPONSIBILITY

A. The installing fire alarm contractor is responsible for the design of a code compliant system, which meets the intent of all State and Local Authority Having Jurisdiction Codes and their adopted amendments along all permitting of such plans and associated permit fees. Reference and coordinate with all contract specifications and plans.

1.04 ACCEPTABLE MANUFACTURERS

A. A.To establish the type, quality, and features of system required, the equipment specified is that of the NOTIFIER Fire Systems. System must be compatible with Notifier Onyx workstation where applicable.

B. All equipment, materials, accessories, devices, etc. covered by the specifications and/or noted on the contract drawings shall be new and unused and be U.L. listed for their intended use.

C. All references to manufacturer's or supplier's model numbers and other pertinent information herein is intended to establish a minimum standard of quality, performance and features required. All equipment proposed as an EQUAL to that specified shall COMPLETELY conform to the specifications herein.

D. Equipment of other manufacturer's or supplier's may be considered as an equal to that specified provided that completely marked and identified catalog sheets of all proposed equipment is provided to the architect/ engineer for review ten (10) days prior to the date of bid for evaluation. In addition, a list of the contractor's qualifications and any exceptions to the specifications must be provided for review. Approval for any such substitution of equipment must be obtained in writing from the architect/engineer five (5) days prior to bid.

E. Acceptable fire alarm systems manufacturer:

1. NOTIFIER Fire Systems (Must be an Authorized Distributor)

2. Other manufacturers will be considered upon approval by Fort Bend County.

1.05 GENERAL REQUIREMENTS

A. Contractor Qualifications:

1. The equipment supplier shall be an authorized and designated representative of the Fire Alarm Manufacturer to sell, install, and service the proposed manufacturer's equipment and shall be approved by the City of Houston to perform the work.

2. The equipment supplier and installing contractor shall be licensed by the State Fire Marshall to sell, install, and service fire alarm systems as required by Article 5.43-2 of the Texas Insurance Code.

3. The installing contractor and/or equipment supplier shall have on his staff a minimum of three (3) installation superintendents who are licensed by the State Fire Marshall's office for such purpose and under whose supervision installation, final connections, and check out will take place as required by the Texas Insurance Code.

4. The installing contractor or equipment supplier shall have on staff a minimum of one (1) certified NICET Level III state licensed fire alarm planner under whose supervision system design shall take place.

5. The installing contractor shall provide 24 hour, 365 days per year emergency service with qualified and state licensed service technicians.

6. The installing contractor shall have been actively engaged in the business of selling, installing, and servicing fire alarm systems for at least ten (10) years.

1.06 SUBMITTALS

A. The installing contractor and/or equipment manufacturer shall provide complete and detailed shop drawings and include:

1. Control panel configuration including wiring and interconnection schematics.

2. Complete point to point wiring diagram showing terminal connections to all system devices.

3. Riser wiring diagram and associated zoning/addressing configurations with associated conduit sizes.

4. Complete floor plan drawings locating all devices associated with the fire alarm system. Floor plan drawings shall include conduit and wiring routing complete with conduit sizing and number of conductors by type. Floor plans shall be on AutoCAD.

5. Factory data sheets on each piece of equipment to be used and so marked as to model, dimensions, size, voltage, and configuration.

6. Detailed system description in this specification format describing system functions and operation. All specification variations and deviations shall be clearly noted and marked.

7. Complete Bill of Material for reference.

8. Programming matrix defining all input/output functions and zoning.

9. Power supply and battery calculations.

10. Written certification from the manufacturer stating that the distributor is authorized to sell, service and install the proposed fire alarm system.

B. All submittal data will be in bound form with contractor's name, supplier's name, project name, and state fire alarm license number adequately identified.

C. Only basic equipment devices have been shown on the contract drawings. Specific wiring between equipment/devices has not been shown. It is the contractor’s responsibility to submit for approval the COMPLETE ENGINEERED system configuration and layout showing all devices, wiring, conduit, and locations along with other required information as specified herein.

1.07 COORDINATION

A. It shall be the responsibility of the installing contractor to coordinate all requirements surrounding installation of the fire alarm system with all trades including, but, not exclusive of: electrical contractor, sprinkler contractor, and HVAC/controls contractor and intercom system. Adequate coordination shall be provided to insure proper installation and interface to all peripheral items required to interact with the fire alarm and communication system to provide a complete and functional life safety system.

PART 2 - GENERAL

2.01 SYSTEM FUNCTIONAL OPERATION

A. Alarm Detection

1. When a fire alarm condition is detected via the main fire control panel by any of the system alarm initiating devices, the following functions shall occur:

a. The system common alarm LED on the CPU Module shall flash. The internal audible trouble device shall sound. Acknowledging the alarm condition shall silence the audible trouble device and revert the flashing common alarm LEDs to a steady state.

b. A 640 character back-lit LCD Display shall indicate all applicable information associated with the alarm condition including: zone, device type, device location, and time of alarm. Location and zoning messages shall be custom field programmed to respective premises.

c. Any remote annunciator LCD display associated with the alarm zone shall be activated as herein specified.

d. The remote off-site monitoring shall transmit alarm signals to an Approved Central Supervising Station. (Central station connection, phone lines and service provided by Owner).

e. All automatic events programmed to the alarm point shall be executed and the associated indicating devices and/or outputs activated.

f. Alarm tones shall sound throughout the facility. Upon expiration of the alert tone, a digitized predetermined voice evacuation message shall be automatically transmitted throughout the facility. The system shall have the capability to generate multiple distinct digital messages as determined by event-initiated programs.

g. Flash all strobe lights (visual signals) throughout the facility.

h. Recall elevators to ground floor as specified herein, or to the alternate floor if the alarm condition originates on the ground floor.

i. Unlock all electrically locked doors.

B. Print status on the system printer (where applicable).

1. All designated "non-silenceable" auxiliary control functions shall remain in operation (even upon silencing of audible alarms) until such time as the control panel is cleared and reset manually (i.e. fan control outputs, central station interface, elevator recall interface, etc.).

2. In addition, remote annunciators shall be located where indicated. The annunciators shall duplicate the control panel alarm status indicators (for selected system zones/points) and in addition, annunciate any system trouble conditions and operate as herein specified.

C. SUPERVISORY CONDITION

1. When a supervisory condition is detected via the main fire control panel by any of the system supervisory initiating devices, the following functions shall occur:

a. The system common supervisory LED on the CPU Module shall flash. The internal audible trouble device shall sound. Acknowledging the supervisory condition shall silence the audible device and revert the flashing common supervisory LED's to a steady state.

b. A 640 character back-lit LCD Display shall indicate all applicable information associated with the supervisory condition including: zone, device type, device location, and time of the supervisory condition. Location and zoning messages shall be custom field programmed to respective premises.

c. Any remote annunciator LCD display associated with the supervisory signal shall be activated as herein specified.

d. The remote off-site monitoring shall transmit supervisory signals to an Approved Central Supervising Station.

e. Print status on the system printer.

D. TROUBLE CONDITION

1. When a trouble condition is detected by the CPU, one of the system initiating alarm or SLC Circuit(s), the following functions shall immediately occur:

a. The system trouble LED on the CPU module shall flash and the internal audible trouble device shall sound. Acknowledgment of the trouble condition shall silence the audible trouble device and cause all trouble LED's to illuminate steady.

b. The 640 character alphanumeric LCD annunciator shall display all applicable information via the alphanumeric display associated with the respective trouble condition and its location.

c. The system common trouble indicator on associated remote annunciators shall be illuminated as specified herein.

d. The remote off-site monitoring shall transmit supervisory signals to an Approved Central Supervising Station.

e. Print status on the system printer.

2.02 ZONING

A. The system shall have the inherent capability to employ "Intelligent" smoke detectors and addressable interface devices capable of being recognized and annunciated at the main control panel on an individual basis. All zoning/device location information shall be totally field programmable to exact job requirements as approved by the architect/engineer.

B. The system shall utilize remote amplifier cabinets for distributed voice communications (if needed), notification appliance circuits, and auxiliary control output circuits. Remote transponder panels shall communicate with the main CPU via the SLC data loop and be capable of being intermixed on the same loop as intelligent smoke detection and control modules.

2.03 ZONING

A. The fire alarm control panel shall be Notifier series NFS2-640/NFS2-320/NFS2-3030 of which should be sized according to manufacturer specs. The control panel shall be modular in design utilizing DISTRIBUTED solid state MICROPROCESSORS and be capable of future expansion. The microprocessor based CPU shall be completely FIELD PROGRAMMABLE. CPU module shall provide for programmable non-volatile RAM memory utilizing integral lithium-based memory IC chips. All circuitry shall be U.L. listed for power-limited application.

B. Central Processing Unit Module (CPU): The CPU shall contain and execute all custom time control functions or control-by-event programs for specified events. Time control events/programs shall be automatically overridden by priority fire alarm events. All programs shall be held in non-volatile programmable RAM memory and shall not be lost even if both system primary and secondary power failure occurs. The system shall include a trouble reminder feature to alert operating personnel to the continued presence of system trouble conditions.

C. Display Interface Board (DIA): The DIA shall provide a 640-character back-lit, super-twist Liquid Crystal Display (LCD). It shall provide Light-Emitting Diodes (LED's) for AC POWER; SYSTEM ALARM; SYSTEM TROUBLE; DISPLAY TROUBLE; and DISABLE. The DIA shall provide a 25-key membrane keypad with control capability to command all system functions, status readouts, manual control action, and entry of any alphabetic or numeric information. The keypad shall include means to enter multiple five digit passwords to prevent unauthorized manual control or programming.

D. CONTROL SWITCHES

1. Acknowledge/step Switch

2. Signal Silence Switch

3. System Reset Switch 04 System Test Switch

4. Lamp Test

E. Loop Control/Expander Module (LCM/LEM): The LCM/LEM shall communicate and provide power to all devices on its loop over a single pair of wires. Each signaling line circuit shall provide the capability to support up to 159 smoke detectors and 159 monitor and control modules. The LCM/LEM shall receive digital/ANALOG information from all "intelligent" detectors and shall process this information to determine normal, alarm, trouble, and sensitivity conditions. The analog information may be used for automatic test and determination of maintenance requirements. The LCM/LEM module shall individually monitor all "intelligent" detectors for sensitivity variation initiating a trouble condition should detector sensitivity "drift" become excessive. The system control unit shall have the capability to remotely read each detectors sensitivity, and if need be, electronically adjust the detector sensitivity as required for existing conditions within U.L. recommended limits. In addition, the system shall incorporate a "day/night" sensitivity feature.

F. Non-Lock Walk Test: The system shall include a special non-lock "walk test” mode. The walk test mode can be initiated by loop, software zone, or globally as field selected. The following reports shall be capable of being generated:

1. General results of all walk tested devices.

2. Report all un-programmed devices installed.

3. Report all programmed devices not installed.

4. Report all devices not tested.

G. Automatic Detector Test: The system shall include a special automatic detector test feature which permits reading and adjustment of the sensitivity of all intelligent detectors from the main control panel. In addition, the automatic test feature shall also permit the functional testing of any "intelligent" detector or addressable interface device individually from the main control panel. An automatic detector test shall occur automatically fourteen times each twenty- four hour period or be initiated manually from the FACP as desired. Automatic detector test sequencing shall be terminated upon receipt of a true alarm condition.

H. Special System Reports: The system shall have the ability to generate and print, upon command, system and point status reports. Selection of 'system' read status provides the operator with global system programming information. Selection of 'point' read status provides the operator with selected individual point programming data.

I. Field Programming: The system shall be 100% field programmable without the need for external computers or PROM programmers, and shall NOT require replacement of memory IC's. Systems requiring factory programming/re-programming OR REPLACEMENT OF MEMORY I.C. CHIPS shall not be acceptable. All programs shall be stored in non-volatile RAM memory. Programming shall be accomplished only after entering an appropriate and pre-selected five digit password security code. System programming mode shall not require the system to be taken off-line nor prohibit the system from performing its normal operations and routines. The system shall be capable of revising/changing programmed functions or system expansion at any time subsequent to initialization as described herein without factory modifications or factory programming. Field programming via the use of external computers may be considered provided programming can be accomplished on- site and the owner permanently furnished with required programming apparatus and software as part of this contract.

J. Event History: The main fire alarm control panel shall have the resident ability to store a minimum of 4000 events as well as a separate 1000 event alarm-only file in chronological order of occurrence. Event history shall include all system alarms, troubles, operator actions, unverified alarms, circuit/point alterations, and component failures. Events shall be time and date stamped. Events shall be stored in non-volatile buffer memory. Access to history buffer shall be secured via five digit password security code. Systems not employing event history memory storage shall be required to furnish a printer/recorder for recording system events.

K. Power Supply: The power supply shall provide all control panel and peripheral power needs with filtered power as well as regulated 24VDC power for external audio-visual devices. The audio- visual power may be increased as needed by adding additional modular expansion power supplies. All power supplies shall be designed to meet U.L. and NFPA requirements for POWER-LIMITED operation on all external signaling lines, including initiating circuits and indicating circuits. Power dedicated circuit and label as such on panels. Input power shall be 120VAC 60Hz. The power supply shall provide internal supervised batteries and automatic charger. The power supply shall provide both positive and negative ground fault supervision, battery/charger fail condition, A.C. power fail indicators. The power supply shall also provide supervision of modular expansion power supplies as may be required. Contractor shall connect the 120V circuits to the emergency circuit/panels backed up by the generator. Batteries shall have 24 hours of standby capacity and 15 minutes of alarm capacity. Battery charger shall recharge batteries from full discharge to full charge over a 24-hour period. Switching from normal power to battery power and back shall occur automatically.

2.04 VOICE COMMUNICATIONS (WHERE APPLICABLE)

A. The NOTIFIER Notifer Model NFC-50/100 or DVC with DAA Voice Command voice communications panel shall be modular in design utilizing solid state MICROPROCESSOR circuitry. The voice evacuation system shall integrate with the main fire alarm control panel. Side car voice evacuation systems are not acceptable. Voice system shall be used where required per code and local AHJ requirements.

B. Communications Controls: The communications control panel shall incorporate the following controls and indicators:

1. All call

2. General alarm

3. Audio trouble LED

4. AUDIO LEVEL LED

5. Manual tone/MESSAGE select switches with LED indicators.

6. Communications zone select switches and select indicators

7. Communications monitor speaker with volume control

8. Dynamic paging microphone

C. Paging

1. The microprocessor based one way paging system shall be provided with a means to selectively activate voice, tones or digitized messages to any or all zones in the system via electronic membrane touch-pad controls. In addition, visual indication by zone will be provided.

2. Each audio/speaker circuit will be totally supervised for opens, shorts or grounds with direct shorts prohibiting selection of the respective zone. All audio circuits shall be POWER LIMITED. Each speaker zone shall be provided with an amber trouble LED for circuit trouble conditions and an active/on LED indicator.

3. Alarm/Paging zones shall be provided as required.

D. Voice

1. The voice communications center DVC with DAA shall be a microprocessor based, supervised, multi-function, audio generator. The communications generator shall contain:

   a. Independent Voice communications CPU.

   b. Non-volatile

   c. One custom digitized message circuit.

   d. Up to four selectable tone generator/oscillators.

   e. Each sub-circuit of the communications center shall be fully supervised and failure of any tone oscillator or digital message generator shall revert the system to the default standby generator.

2. The system shall be provided with a custom field programmable digitized message.

3. The system shall provide adequate audio amplification. The system shall be capable of amplifier capacity and expansion as required. Each amplifier shall be continuously monitored electronically for proper output level. Each unit shall be equipped with diagnostic indicators. Each amplifier shall provide a minimum of 50 watts of 25 VRMS of power. Each unit shall be equipped with its own individual power/pilot LED, audio input trouble LED, battery input trouble LED, and amplifier trouble/fail LED. Provide amplification for 1/2 watt per speaker plus 25% spare capacity. Electrical Contractor shall provide and install a 120 VAC dedicated circuit to each remote amplifier cabinet (if needed).

4. Secondary cell dialer shall be Model # Starlink SLE-LTEVI Fire or owner approved equal.

2.05 FIELD DEVICES

A. Multi Criteria Smoke and Heat Detector (FCO-951 or FCO-951IV):

1. Notifier Model FAPT-851 or latest intelligent multi criteria acclimating detector shall be provided where shown on the drawings. The intelligent multi criteria Acclimate Plus and/or Clip Mode detector shall be an addressable device that is designed to monitor a minimum of photoelectric and thermal technologies in a single sensing device. The design shall include the ability to adapt to its environment by utilizing a built-in microprocessor to determine its environment and choose the appropriate sensing settings. The detector design shall allow a wide sensitivity window, no less than 1 to 4% per foot obscuration. This detector shall utilize advanced electronics that react to slow smoldering fires and thermal properties all within a single sensing device.

2. The microprocessor design shall be capable of selecting the appropriate sensitivity levels based on the environment type it is in (office, manufacturing, kitchen etc.) and then have the ability to automatically change the setting as the environment changes (as walls are moved or as the occupancy changes).

3. The intelligent multi criteria detection device shall include the ability to combine the signal of the thermal sensor with the signal of the photoelectric signal in an effort to react hastily in the event of a fire situation. It shall also include the inherent ability to distinguish between a fire condition and a false alarm condition by examining the characteristics of the thermal and smoke sensing chambers and comparing them to a database of actual fire and deceptive phenomena.

4. The detector shall be semi-flush ceiling mounted and be provided with modular detector head with twist-lock base.

B. Intelligent Duct Detector

1. Notifier model DNR series duct mounted "intelligent" photoelectric smoke detectors shall be provided where shown on the drawings. Detectors shall operate on the same principles and exhibit the same basic characteristics as area type "intelligent" photoelectric smoke sensors. The unit shall be capable of interchanging/accepting either photo-electronic or ionization type sensors. The detector shall operate in air velocities of 300 FPM to 4,000 FPM. Each detector shall interface directly to the system SLC loop without the requirement of interface zone modules.

2. The unit shall consist of a clear molded plastic enclosure with integral conduit knockouts. The unit shall be provided with clear faceplate cover to provide visual viewing of detector/sensor for monitoring sensor operation and chamber condition. The duct housing shall be provided with gasket seals to insure proper seating of the housing to the associated ductwork. Each unit's sampling tubes shall extend the width of the duct and be provided with porosity filters to reduce sensor/chamber contamination. Detectors shall be installed per NFPA 90A, and be listed with the fire alarm control panel. A remote LED shall be located on the corridor ceiling adjacent to the respective detector where detectors are not plainly visible or concealed from view.

C. Intelligent Thermal Detectors

1. Notifier Model FST-951R analog, fixed temperature, thermal detectors shall be provided where indicated on the drawings. The detectors shall use dual electronic thermostats to measure temperature levels in the chamber and shall, on command from the control panel, send data to the panel representing the analog temperature level.

2. The detectors shall provide dual alarm and power/status LED's. Status LED's shall flash under normal conditions, indicating that the detector is operational and in regular communication with the control panel. Both LED's may be placed into steady illumination by the control panel, indicating that an alarm condition has been detected. An output connection shall also be provided in the base to connect an external remote alarm LED.

3. The detector shall be semi-flush ceiling mounted and be provided with modular detector head with twist-lock base.

D. Addressable Manual Stations

1. Notifier Model NBG-12LX manual stations shall be provided where indicated on the drawings. The manual stations shall contain the intelligence for reporting address, identity, alarm and trouble to the fire alarm control panel

   a. The manual pull station shall be constructed of durable molded polycarbonate material, and shall be RED in color with raised white lettering. Stations shall be of the dual action type.

   b. Manual stations (when required), shall be located not more than 5 feet from the entrance to each exit. Additional manual stations shall be located so that the travel distance to the nearest manual station does not exceed 200 feet.

   c. Manual station heights shall be a minimum of 42” and a maximum of 48” measured vertically, from the finished floor level to the activating handle or lever.

   d. Systems using automatic smoke detection or water flow detection devices to initiate the fire alarm system, not less than one (1) manual station shall be provided to initiate a fire alarm signal. The manual station shall be located where required by the Authority Having Jurisdiction, per NFPA 101. Provide Stopper II cover on all manual stations where shown on plans.

E. Monitor Module

1. Notifier model FMM-101 addressable monitor modules shall be provided where required to interface to contact alarm devices. The monitor module shall be used to connect a supervised zone of conventional initiating devices to an intelligent SLC loop.

2. The monitor module shall provide address-setting means using rotary decimal switches. No binary coding shall be required.

F. Control Module

1. Notifier model FCM/FRM control/relay modules or approved equal shall be provided where required to provide audible alarm interface and/or relay control interface. The control module shall be used to connect a supervised zone of conventional indicating devices to an intelligent loop. The zone may be wired class A or class B - field selected. The control module may be optionally wired as dry contact (form C) relay.

2. The control module shall provide address-setting means using rotary decimal switches. No binary coding shall be required. A status LED shall be provided which shall flash under normal conditions, indicating that the control module is operational and in regular communication with the control panel. The LED shall illuminate steady when the device is actuated via the fire alarm control panel.

G. Remote LCD Alpha-Numeric Annunciators, Remote Mic with Switches

1. Provide where indicated on the drawings, a Notifier LCD-160 640 character remote LCD alpha-numeric annunciator or approved equal to annunciate all system events and duplicate the displayed status at the main FACP. The annunciator shall be a backlit eighty-character LCD display and operate via the system RS485 or RS232 serial output terminal from the main FACP. The LCD display shall automatically illuminate upon receipt of an alarm or trouble condition. The illumination source shall extinguish during normal/standby mode to conserve power. The unit shall operate from FACP 24VDC power and function during system power failure while the system resides on standby batteries. The remote LCD annunciator shall include:

   a. Integral time-date clock

   b. Time-date select switch

   c. Time-date/contrast adjust

   d. Display/step switch

   e. System reset

   f. f. System silence

   g. System acknowledge

   h. Integral trouble buzzer

   i. Point enable/disable capability

   j. Full QWERTY keypad for system programming.

2. Annunciator shall upon command display the first system alarm, last alarm, and system alarm count. The unit shall be equipped with an integral lamp test feature. The unit shall be semi flush mounted where shown.

H. Speakers/Horn (Where Applicable)

1. Speakers shall be listed under U.L. standard 1480, meet all specifications of the Life Safety Code and be capable of reproducing both tone alerts and voice communication instructions. Speakers/Horns shall be System Sensor L Series or equal by Wheelock. Speakers or approved equal shall have built in matching transformer, field selectable multiple power taps and circuitry for speaker/line supervision. Speakers shall be provided with screw terminal connection points. Speakers shall be 4" square or round with textured white decorative grill. Speakers shall be tapped to produce a minimum sound-pressure level of 87 dBA at 10 feet. Speakers shall be ceiling mounted as located on the drawings.

I. Speakers/Horns with Integral Strobe Light

1. Speakers shall be listed under U.L. standard 1480, meet all specifications of the Life Safety Code and be capable of reproducing both tone alerts and voice communication instructions. Speakers/strobe units shall be System Sensor L Series. Speakers shall have built in matching transformer, field selectable multiple power taps and circuitry for speaker/line supervision. Speakers shall be provided with screw terminal connection points. Speaker/Strobes shall be white. Each speaker/strobe shall be equipped with an integral high intensity visual alarms shall be Xenon strobe type producing a minimum of 15 candela on a 24 VDC limited energy supervised circuit. Each strobe light shall be capable of providing multi candela output. Alarm devices shall be designated to be ceiling mounted as indicated on the drawings. Signals shall operate in unison with audible alarm appliances. High intensity visual signals shall be of solid state low current design and listed to U.L. Standard 1971 All strobe lights shall be synchronized.

J. High Intensity Visual Signals

1. Provide System Sensor L Series or equal by Wheelock strobe lights were shown on the drawings. High intensity visual signals shall be installed where shown on the drawings and as may be required by the Americans with Disabilities Act (Public Law 101-336), Texas Accessibility Standards and NFPA 72, Chapter 6. Strobe lights shall be red. High intensity visual alarms shall be Xenon strobe type producing a minimum of 15 candela on a 24 VDC limited energy supervised circuit. Each strobe light shall be capable of providing multi candela output. Alarm devices shall be designated to be wall or ceiling mounted as indicated on the drawings. Signals shall operate in unison with audible alarm appliances. High intensity visual signals shall be of solid state low current design and listed to U.L. Standard 1971. All strobe lights shall be synchronized.

K. Protective Covers

1. Provide protective covers on fire alarm notification appliance devices located in multi-purpose rooms and gymnasium locker rooms. These protective covers shall be manufactured by Safety Technology International, Inc. (STI). These covers shall be provided on all devices including but not limited to audible and visual devices, and manual pull stations. The mounting of a device shall be reinforced to enable the protective covers to protect the fire alarm devices. In gymnasiums, provide wire guards or approved equal. No horns in covers.

L. Sprinkler Waterflow Switch

1. Sprinkler waterflow switches shall be installed where indicated on the drawings. Each unit shall contain one set of SPDT alarm contacts. Waterflow switches shall be provided and installed by the fire protection contractor, and connected by the fire alarm contractor.

M. Sprinkler Valve Supervisory Switch

1. Sprinkler valve supervisory switches shall be installed on each valve as indicated on the drawings. Each unit shall contain on set of SPDT contacts. Sprinkler valve supervisory switches shall be provided, installed, and adjusted by the fire protection contractor, and connected by the fire alarm contractor.

N. Auxiliary AHU Relays

1. Notifier/Air Products Model MR-101/C relays or approved equal shall be provided for HVAC and AHU control and interface. Relays shall be heavy duty type and rated up to 10 amps at 24 VDC, 60 HZ. Relays shall be provided with NEMA I dust cover assembly and be provided with SPDT contacts as well as activated LED indicator. All interface relays shall be connected to a supervised notification appliance circuit.

O. Field Charging Power Supplies

1. Provide Notifier FCPS-24S6/8 or PSE-10 power supplies with battery backup as required. Electrical Contractor shall provide a 120 VAC dedicated emergency circuit to each power supply.

P. Conventional Weatherproof Thermal Detector

1. When heat detection devices are located in harsh and/or moist environments, such as showers and similar areas, which are subject to high humidity, the following device shall be provided: Weatherproof Heat Detector 135 F Rate Compensated shall be provided. The detector shall mount in a weatherproof 4” electrical box with a ½” N.P.T. threaded hub. This detector shall be connected to an addressable monitor module.

Q. Digital Alarm Transmitter Communicator

1. Provide Digital alarm communicator shall be multi-channel UDACT-2. Provide point ID reporting to central monitoring station. (Owner will provide Analog or Digital to Analog Telephone lines cabling to the fire alarm panel, Service and Connection by owner).

R. Provide a minimum of (50) initiating points for future portable buildings where applicable. Provide (2) dedicated NAC circuits pulled to the exit point above the ceiling. Refer to floor plan for location.

S. Contractor shall provide a 120 VAC dedicated emergency circuit to each amplifier.

PART 3 - EXECUTION

3.01 INSTALLATION

A. Wiring:

1. All wiring shall be in accordance with NFPA 72 and the National Electrical Code, Local Codes, and article 760 of NFPA Standard 70. All wiring sizes shall conform to recommendations of the equipment manufacturer, and as indicated on the engineered shop drawings.

2. Limited energy FPLP wire shall be installed provided such wire is U.L. Listed to U.L. TEST910 for such applications and is of the low smoke producing fluorocarbon type and complies with NEC Article 760 if so approved by the local authority having jurisdiction.

3. All wiring for SLC signaling circuits shall be of the twisted, low capacitance type to guard against outside RF and EMF interference and induced noise.

4. All wiring shall be run in a supervised fashion (i.e. no branch wiring or dog- legged wiring) per NFPA requirements such that any wiring disarrangement will initiate the appropriate trouble signals via the main control panel per NFPA and U.L. requirements.

5. Wiring splices shall be kept to a minimum with required splices to be made in designated terminal boxes or at field device junction boxes. Transposing or color code changes of wiring will not be permitted. End-of-line supervisory devices shall be installed with the last device on the respective circuit. Said device shall be appropriately marked designating it as the terminating device on the respective circuit.

6. No A.C. wiring or any other wiring shall be run in the same conduit as fire alarm wiring.

B. Open Wiring

1. Systems utilizing open wiring techniques with low smoke plenum cable.

2. Support wire clear of knock out panels, access panels, and maintenance spaces for equipment. Wire and cable shall be run using wire management techniques supporting cable as close as possible to within one foot of the floor or roof rafters. Wire supports shall be directly fastened to the structure on a maximum of five foot centers. Wire routing shall be parallel and perpendicular to building lines. The wire and cable shall be secured with tie wraps or carrier wire. Sagging in excess of three inches will not be allowed nor will bending of the supporting ring structure.

C. Conduit/Raceway and 120 VAC Power wiring

1. Electrical Contractor to provide conduit and raceway system and shall be installed in the mechanical, electrical and telephone rooms and as required by NFPA 70. Electrical Contractor shall provide and install all required dedicated 120 VAC power circuits for the fire alarm system including the main fire alarm panel, remote amplifier panels and remote strobe light power supplies. Contractor shall connect the 120V circuits to the emergency circuit/panels backed up by the generator.

D. Minimum Wire Sizes Shall Be as Follows:

1. Signaling Line Circuits: 18 AWG Twisted (Low Capacitance)

2. Notification Appliance Circuits: 14 AWG

3. Relay Control Circuits: 18 AWG

4. Speaker Circuits: 16 AWG Twisted/Shielded

E. All wire shall be plenum rated.

3.02 TEST AND REPORTS

A. A state licensed and factory trained technical representative of the manufacturer shall supervise the final control panel connections and testing of the system. Upon completion of the acceptance tests, the owner and/or his representatives shall be instructed in the proper operation of the system. Instruction shall be 4 hours minimum.

B. The installing contractor shall functionally test each and every device in the entire system for proper operation and response. In addition, each circuit in the system shall be fully tested for wiring supervision. Any items found not properly installed or non-functioning shall be replaced or repaired and re-tested. Provide a device list of every device and tested results in an excel format.

C. The installing contractor shall provide a complete written report on the functional test of the entire system. A copy of the test report shall be provided with maintenance manuals. The test report shall be signed and dated by the licensed fire alarm superintendent responsible for supervising the final system test and checkout.

D. The installing contractor's fire alarm technician shall test the entire system in the presence of the local authorities having jurisdiction. The contractor shall be responsible for making any changes, adjustments, or corrections as may be required by the local authorities.

E. It is the intent of these specifications and of the architect/engineer that a continued program of system maintenance be continued by the owner in compliance with NFPA Standard 72, Chapter 7. It is mandatory that the installing contractor shall provide such services and make available these services to the owner upon completion of the project.

3.03 WARRANTY

A. The fire alarm system, including labor and material, shall be free from defects in workmanship and materials, under normal use and service, for a period of one year from the date of acceptance or beneficial occupancy, whichever shall occur first. Any equipment or workmanship shown to be defective shall be repaired, replaced or adjusted during normal working hours at no cost to the owner.

B. The equipment manufacturer shall be represented by a local service organization and the name of such shall be furnished to the Owner, Architect, and Engineer.

3.04 FLOOR PLANS

A. Provide (1) electronic copy and (1) hard copy of the approved fire alarm drawings as well as a FML-009 with approved State of Texas installation tags posted at fire panel.

SECTION 31 31 16
TERMITE CONTROL

PART 1 - GENERAL

1.01 SUMMARY

A. Section includes soil treatment with termiticide.

1.02 PREINSTALLATION CONFERENCE

A. Preinstallation Conference: Conduct conference at Project site.

1.03 ACTION SUBMITTALS

A. Product Data: For each type of product indicated. Include the EPA-Registered Label for termiticide products.

1.04 INFORMATIONAL SUBMITTALS

A. Product certificates.

B. Soil Treatment Application Report: Include the following:

1. Date and time of application.
1. Moisture content of soil before application.
2. Termiticide brand name and manufacturer.
3. Quantity of undiluted termiticide used.
4. Dilutions, methods, volumes used, and rates of application.
5. Areas of application.
6. Water source for application.

C. Warranties: Sample of special warranties.

1.05 QUALITY ASSURANCE

A. Installer Qualifications: A specialist who is licensed according to regulations of authorities having jurisdiction to apply termite control treatment and products in jurisdiction where Project is located and who employs workers trained and approved by manufacturer to install manufacturer's products.

B. Regulatory Requirements: Formulate and apply termiticides and termiticide devices according to the EPA-Registered Label.

1.06 PROJECT CONDITIONS

A. Environmental Limitations: To ensure penetration, do not treat soil that is water saturated or frozen. Do not treat soil while precipitation is occurring. Comply with requirements of the EPA-Registered Label and requirements of authorities having jurisdiction.

B. Coordinate soil treatment application with excavating, filling, grading, and concreting operations. Treat soil under footings, grade beams, and ground-supported slabs before construction.

1.07 WARRANTY

A. Soil Treatment Special Warranty: Manufacturer's standard form, signed by Applicator and Contractor, certifying that termite control work, consisting of applied soil termiticide treatment, will prevent infestation of subterranean termites. If subterranean termite activity or damage is discovered during warranty period, re-treat soil and repair or replace damage caused by termite infestation.

1. Warranty Period: Five years from date of Substantial Completion.

1.08 MAINTENANCE SERVICE

A. Continuing Service: Beginning at Substantial Completion, provide 12 months' continuing service including monitoring, inspection, and re-treatment for occurrences of termite activity. Provide a standard continuing service agreement. State services, obligations, conditions, terms for agreement period, and terms for future renewal options.

PART 2 - PRODUCTS

2.01 SOIL TREATMENT

A. Termiticide: Provide an EPA-Registered termiticide, complying with requirements of authorities having jurisdiction, in an aqueous solution formulated to prevent termite infestation. Provide quantity required for application at the label volume and rate for the maximum termiticide concentration allowed for each specific use, according to product's EPA-Registered Label.

1. Manufacturers: Subject to compliance with requirements, manufacturers offering products that may be incorporated into the Work include, but are not limited to, the following:

a. BASF Corporation, Agricultural Products.
b. Bayer Environmental Science.
c. FMC Corporation, Agricultural Products Group.
d. Syngenta.

2. Service Life of Treatment: Soil treatment termiticide that is effective for not less than five years against infestation of subterranean termites.

PART 3 - EXECUTION

3.01 APPLICATION, GENERAL

A. General: Comply with the most stringent requirements of authorities having jurisdiction and with manufacturer's EPA-Registered Label for products.

3.02 APPLYING SOIL TREATMENT

A. Examine substrates, areas, and conditions, with Applicator present, for compliance with requirements for moisture content of soil per termiticide label requirements, interfaces with earthwork, slab and foundation work, landscaping, utility installation, and other conditions affecting performance of termite control.

B. Proceed with application only after unsatisfactory conditions have been corrected.

C. Soil Treatment Preparation: Remove foreign matter and impermeable soil materials that could decrease treatment effectiveness on areas to be treated. Loosen, rake, and level soil to be treated except previously compacted areas under slabs and footings. Termiticides may be applied before placing compacted fill under slabs if recommended in writing by termiticide manufacturer.

1. Fit filling hose connected to water source at the site with a backflow preventer, complying with requirements of authorities having jurisdiction.

D. Application: Mix soil treatment termiticide solution to a uniform consistency. Provide quantity required for application at the label volume and rate for the maximum specified concentration of termiticide, according to manufacturer's EPA-Registered Label, to the following so that a continuous horizontal and vertical termiticidal barrier or treated zone is established around and under building construction. Distribute treatment evenly.

1. Slabs-on-Grade: Under ground-supported slab construction, including footings, building slabs, and attached slabs as an overall treatment. Treat soil materials before concrete footings and slabs are placed.
2. Foundations: Adjacent soil, including soil along the entire inside perimeter of foundation walls; along both sides of interior partition walls; around plumbing pipes and electric conduit penetrating the slab; around interior column footers, piers, and chimney bases; and along the entire outside perimeter, from grade to bottom of footing. Avoid soil washout around footings.
3. Masonry: Treat voids.
4. Penetrations: At expansion joints, control joints, and areas where slabs will be penetrated.

E. Avoid disturbance of treated soil after application. Keep off treated areas until completely dry.

F. Protect termiticide solution, dispersed in treated soils and fills, from being diluted until ground-supported slabs are installed. Use waterproof barrier according to EPA-Registered Label instructions.

G. Post warning signs in areas of application.

H. Reapply soil treatment solution to areas disturbed by subsequent excavation, grading, landscaping, or other construction activities following application.

END OF SECTION

SECTION 31 62 13.29 - SHALLOW SPREAD FOOTING FOUNDATIONS

CONDITIONS OF THE CONTRACT AND DIVISION 1, as applicable, apply to this Section.

PART 1 - GENERAL

1.1 DESCRIPTION OF REQUIREMENTS

A. Work Included: Perform all work necessary and required for the construction of the project as indicated. Such work includes but is not necessarily limited to the furnishing and installing of spread footings as shown and noted on the drawings and specified herein, including the removal of all debris, patching of concrete walks, and backfilling.

B. Related Work in Other Sections: The following items of associated work are included in other sections of these specifications:

1. Section 03 30 00 - Cast-in-place concrete.

1.2 QUALITY CONTROL

A. Contractor's responsibility: Provide suitable access and lighting for Architect/Engineer and Owners representative to inspect the drilled pier excavations.

PART 2 - EXECUTION

2.1 PREPARATION

A. The design layout, construction and removal of debris shall be the sole responsibility of the Contractor.

B. For estimating purposes, the base bid shall be based on the spread footing depths as indicated on the structural drawings.

2.2 INSTALLATION

A. Excavation: Maintain spread footing centers throughout operation. Should spread footing excavation be carried below depth designated, fill additional excavation with concrete as specified for the spread footings. No earth backfill will be allowed in footing excavations.

B. Cleaning: Keep spread footing base thoroughly clean and free of water before concrete is placed. Protect holes from damage to avoid recleaning.

C. Reinforcement: Set in place reinforcement steel, which has already been tied. Maintain 3" minimum coverage of concrete.

END OF SECTION 316213.29

SECTION 32 16 23
SIDEWALKS

1.01 SUMMARY

A. Section includes colored concrete sidewalks.

B. Locations: In addition to steel trowel finish, provide the following concrete finishes in the corresponding location.

1. Rocksalt: At entry patio as indicated on Drawings.
2. Exposed Aggregate: At entry patio as indicated on Drawings.

C. Related Sections include:

1. Section 03 30 00 “Cast-in-Place Concrete” for general building applications of concrete.
2. Division 32 Section “Concrete Paving Joint Sealants” for joint sealants in expansion and contraction joints within decorative concrete sidewalks and in joints between decorative concrete sidewalks and adjacent construction.

1.02 DEFINITIONS

A. Cementitious Materials: Portland cement alone or in combination with one or more of blended hydraulic cement, fly ash, slag cement, and other pozzolans.

B. W/C Ratio: The ratio by weight of water to cementitious materials.

1.03 PREINSTALLATION MEETINGS

A. Preinstallation Conference: Conduct conference at Project site.

1.04 ACTION SUBMITTALS

A. Product Data: For each type of product.

B. Samples for Initial Selection: For each type of product, ingredient, or admixture requiring color, pattern, or texture selection.

C. Samples for Verification: For each type of exposed color, pattern, or texture indicated.

D. Design Mixtures: For each decorative concrete sidewalk mixture. Include alternate design mixtures when characteristics of materials, Project conditions, weather, test results, or other circumstances warrant adjustments.

1.05 INFORMATIONAL SUBMITTALS

A. Material Certificates: For the following, from manufacturer:

1. Cementitious materials.
2. Steel reinforcement and reinforcement accessories.
3. Admixtures.
4. Curing compounds.
5. Bonding agent or epoxy adhesive.
6. Joint fillers.

B. Material Test Reports: For each of the following:

1. Aggregates. Include service-record data indicating absence of deleterious expansion of concrete due to alkali-aggregate reactivity.

C. Field quality-control reports.

1.06 QUALITY ASSURANCE

A. Installer Qualifications: An employer of workers trained and approved by manufacturer of decorative concrete sidewalks systems.

B. Ready-Mix-Concrete Manufacturer Qualifications: A firm experienced in manufacturing ready-mixed concrete products and that complies with ASTM C94/C94M requirements for production facilities and equipment.

1. Manufacturer certified according to NRMCA's “Certification of Ready Mixed Concrete Production Facilities” (Quality Control Manual - Section 3, “Plant Certification Checklist”).

C. Testing Agency Qualifications: Qualified according to ASTM C1077 and ASTM E329 for testing indicated.

1. Personnel conducting field tests shall be qualified as ACI Concrete Field Testing Technician, Grade 1, according to ACI CP-1 or an equivalent certification program.

D. Mockups: Build mockups to verify selections made under Sample submittals and to demonstrate aesthetic effects and set quality standards for materials and execution.

1. Build mockups of full-thickness sections of decorative concrete sidewalks to demonstrate typical joints; surface color, pattern, and texture; curing; and standard of workmanship.
2. Build mockups of decorative concrete sidewalks in the location and of the size indicated or, if not indicated, build mockups where directed by Architect and not less than 96 inches by 96 inches.
3. Approval of mockups does not constitute approval of deviations from the Contract Documents contained in mockups unless Architect specifically approves such deviations in writing.
4. Approved mockups may become part of the completed Work if undisturbed at time of Substantial Completion.

1.07 PRECONSTRUCTION TESTING

A. Preconstruction Testing Service: Engage a qualified independent testing agency to perform preconstruction testing on decorative concrete sidewalks mixtures.

1.08 FIELD CONDITIONS

A. Traffic Control: Maintain access for vehicular and pedestrian traffic as required for other construction activities.

B. Cold-Weather Concrete Placement: Protect concrete work from physical damage or reduced strength that could be caused by frost, freezing, or low temperatures. Comply with ACI 306.1 and the following:

1. When air temperature has fallen to or is expected to fall below 40 deg F, uniformly heat water and aggregates before mixing to obtain a concrete mixture temperature of not less than 50 deg F and not more than 80 deg F at point of placement.
2. Do not use frozen materials or materials containing ice or snow.
3. Do not use calcium chloride, salt, or other materials containing antifreeze agents or chemical accelerators unless otherwise specified and approved in design mixtures.

C. Hot-Weather Concrete Placement: Comply with ACI 301 and as follows when hot-weather conditions exist:

1. Cool ingredients before mixing to maintain concrete temperature below 90 deg F at time of placement. Chilled mixing water or chopped ice may be used to control temperature, provided water equivalent of ice is calculated in total amount of mixing water. Using liquid nitrogen to cool concrete is Contractor's option.
2. Cover steel reinforcement with water-soaked burlap, so steel temperature will not exceed ambient air temperature immediately before embedding in concrete.
3. Fog-spray forms, steel reinforcement, and subgrade just before placing concrete. Keep subgrade moisture uniform without standing water, soft spots, or dry areas.

PART 2 - PRODUCTS

2.01 CONCRETE, GENERAL

A. ACI Publications: Comply with ACI 301 unless otherwise indicated.

2.02 FORMS

A. Form Materials: Plywood, metal, metal-framed plywood, or other approved panel-type materials to provide full-depth, continuous, straight, and smooth exposed surfaces.

1. Use flexible or uniformly curved forms for curves of a radius of 100 feet or less. Do not use notched and bent forms.

B. Forms for Textured Finish Concrete: Units of face design, size, arrangement, and configuration indicated. Provide solid backing and form supports to ensure stability of textured form liners.

C. Form-Release Agent: Commercially formulated form-release agent that will not bond with, stain, or adversely affect concrete surfaces and that will not impair subsequent treatments of concrete surfaces.

2.03 STEEL REINFORCEMENT

A. Plain-Steel Welded-Wire Reinforcement: ASTM A1064/A1064M, fabricated from as-drawn steel wire into flat sheets.

B. Reinforcing Bars: ASTM A615/A615M, Grade 60; deformed.

C. Steel Bar Mats: ASTM A184/A184M; with ASTM A615/A615M, Grade 60 deformed bars; assembled with clips.

D. Plain-Steel Wire: ASTM A1064/A1064M, as drawn.

E. Joint Dowel Bars: ASTM A615/A615M, Grade 60 plain-steel bars. Cut bars true to length with ends square and free of burrs.

F. Bar Supports: Bolsters, chairs, spacers, and other devices for spacing, supporting, and fastening reinforcing bars, welded-wire reinforcement, and dowels in place. Manufacture bar supports according to CRSI's “Manual of Standard Practice” from steel wire, plastic, or precast concrete of greater compressive strength than concrete specified, and as follows:

1. Equip wire bar supports with sand plates or horizontal runners where base material will not support chair legs.

2.04 CONCRETE MATERIALS

A. Cementitious Materials: Use the following cementitious materials, of same type, brand, and source throughout Project:

1. Portland Cement: ASTM C 150/C 150M, gray portland cement Type I or Type II.
2. Fly Ash: ASTM C 618, Class C or Class F.

B. Normal-Weight Aggregates: ASTM C 33/C 33M, Class 4M, uniformly graded. Provide aggregates from a single source with documented service-record data of at least 10 years' satisfactory service in similar paving applications and service conditions using similar aggregates and cementitious materials.

1. Maximum Coarse-Aggregate Size: 1-1/2 inches nominal.
2. Fine Aggregate: Free of materials with deleterious reactivity to alkali in cement.

C. Chemical Admixtures: Admixtures certified by manufacturer to be compatible with other admixtures and to contain not more than 0.1 percent water-soluble chloride ions by mass of cementitious material.

1. Water-Reducing Admixture: ASTM C 494/C 494M, Type A.
2. Retarding Admixture: ASTM C 494/C 494M, Type B.
3. Water-Reducing and Retarding Admixture: ASTM C 494/C 494M, Type D.
4. Plasticizing and Retarding Admixture: ASTM C 1017/C 1017M, Type II.

D. Color Pigment: ASTM C 979/C 979M, synthetic mineral-oxide pigments or colored water-reducing admixtures; color stable, free of carbon black, nonfading, and resistant to lime and other alkalis.

1. Manufacturers: Subject to compliance with requirements, available manufacturers offering products that may be incorporated into the Work include, but are not limited to the following:

a. BASF Corporation.
b. Butterfield Color, Inc.
c. Euclid Chemical Company (The); an RPM company.
d. QC Construction Products.
e. Scofield, a Business Unit of Sika Corporation.
f. Solomon Colors, Inc.

E. Water: Potable and complying with ASTM C 94/C 94M.

2.05 CURING AND SEALING MATERIALS

A. Curing Paper: Nonstaining, waterproof paper, consisting of two layers of kraft paper cemented together and reinforced with fiber, and complying with ASTM C171.

2.06 RELATED MATERIALS

A. Joint Fillers: ASTM D 1751, asphalt-saturated cellulosic fiber in preformed strips.

B. Bonding Agent: ASTM C 1059/C 1059M, Type II, non-redispersible, acrylic emulsion or styrene butadiene.

C. Epoxy-Bonding Adhesive: ASTM C 881/C 881M, two-component epoxy resin capable of humid curing and bonding to damp surfaces; of class suitable for application temperature, of grade complying with requirements, and of the following types:

1. Types I and II, nonload bearing or Types IV and V, load bearing, as required for application indicated, for bonding hardened or freshly mixed concrete to hardened concrete.

D. Polyethylene Film: ASTM D4397, 1 mil thick, clear.

2.07 CONCRETE MIXTURES

A. Prepare design mixtures, proportioned according to ACI 301, for each type and strength of normal-weight concrete, and as determined by either laboratory trial mixtures or field experience.

1. Use a qualified independent testing agency for preparing and reporting proposed concrete design mixtures for the trial batch method.
2. When automatic machine placement is used, determine design mixtures and obtain laboratory test results that comply with or exceed requirements.

B. Cementitious Materials: Use fly ash as needed to reduce the total amount of portland cement, which would otherwise be used, by not less than 40 percent. Limit percentage, by weight, of cementitious materials other than portland cement in concrete as follows:

1. Fly Ash or Pozzolan: 25 percent.

C. Limit water-soluble, chloride-ion content in hardened concrete to 0.15 percent by weight of cement.

D. Chemical Admixtures: Use admixtures according to manufacturer's written instructions.

1. Use water-reducing admixture, high-range, water-reducing admixture, or plasticizing and retarding admixture in concrete as required for placement and workability.
2. Use water-reducing and retarding admixture when required by high temperatures, low humidity, or other adverse placement conditions.

E. Concrete Mixtures: Normal-weight concrete.

1. Compressive Strength (28 Days): 3000 psi unless otherwise indicated.
2. Maximum W/C Ratio at Point of Placement: 0.45.
3. Slump Limit: 4 inches, plus or minus 1 inch.

F. Color Pigment: Add color pigment to concrete mixture according to manufacturer's written instructions and to result in hardened concrete color consistent with approved mockup.

2.08 CONCRETE MIXING

A. Ready-Mixed Concrete: Measure, batch, and mix concrete materials and concrete according to ASTM C94/C94M. Furnish batch certificates for each batch discharged and used in the Work.

1. When air temperature is between 85 and 90 deg F, reduce mixing and delivery time from 1-1/2 hours to 75 minutes; when air temperature is above 90 deg F, reduce mixing and delivery time to 60 minutes.

B. Project-Site Mixing: Measure, batch, and mix concrete materials and concrete according to ASTM C94/C94M. Mix concrete materials in appropriate drum-type batch machine mixer.

1. For concrete batches of 1 cu. yd. or smaller, continue mixing at least 1-1/2 minutes, but not more than 5 minutes after ingredients are in mixer, before any part of batch is released.
2. For concrete batches larger than 1 cu. yd., increase mixing time by 15 seconds for each additional 1 cu. yd..

3. Provide batch ticket for each batch discharged and used in the Work, indicating Project identification name and number, date, mixture type, mixing time, quantity, and amount of water added.

PART 3 - EXECUTION

3.01 EXAMINATION

A. Examine exposed subgrades and subbase surfaces for compliance with requirements for dimensional, grading, and elevation tolerances.

B. Proof-roll prepared subbase surface below concrete paving to identify soft pockets and areas of excess yielding.

1. Completely proof-roll subbase in one direction and repeat in perpendicular direction. Limit vehicle speed to 3 mph.
2. Proof-roll with a pneumatic-tired and loaded, 10-wheel, tandem-axle dump truck weighing not less than 15 tons.
3. Correct subbase with soft spots and areas of pumping or rutting exceeding depth of 1/2 inch according to requirements in Division 31 Section “Earth Moving.”

C. Proceed with installation only after unsatisfactory conditions have been corrected.

3.02 PREPARATION

A. Remove loose material from compacted subbase surface immediately before placing concrete.

B. Protect adjacent construction from discoloration and spillage during application of color hardeners, release agents, stains, curing compounds, and sealers.

3.03 EDGE FORMS AND SCREED CONSTRUCTION

A. Set, brace, and secure edge forms, bulkheads, and intermediate screed guides to required lines, grades, and elevations. Install forms to allow continuous progress of work and so forms can remain in place at least 24 hours after concrete placement.

B. Clean forms after each use and coat with form-release agent to ensure separation from concrete without damage.

3.04 STEEL REINFORCEMENT INSTALLATION

A. General: Comply with CRSI's “Manual of Standard Practice” for fabricating, placing, and supporting reinforcement.

B. Clean reinforcement of loose rust and mill scale, earth, ice, or other bond-reducing materials.

C. Arrange, space, and securely tie bars and bar supports to hold reinforcement in position during concrete placement. Maintain minimum cover to reinforcement.

D. Install welded-wire reinforcement in lengths as long as practicable. Lap adjoining pieces at least one full mesh, and lace splices with wire. Offset laps of adjoining widths to prevent continuous laps in either direction.

E. Install fabricated bar mats in lengths as long as practicable. Handle units to keep them flat and free of distortions. Straighten bends, kinks, and other irregularities, or replace units as required before placement. Set mats for a minimum 2-inch overlap to adjacent mats.

3.05 JOINTS

A. General: Form construction, isolation, and contraction joints and tool edges true to line, with faces perpendicular to surface plane of concrete. Construct transverse joints at right angles to centerline unless otherwise indicated.

1. When joining existing sidewalks, place transverse joints to align with previously placed joints unless otherwise indicated.

B. Construction Joints: Set construction joints at side and end terminations of sidewalks and at locations where sidewalks operations are stopped for more than one-half hour unless sidewalks terminates at isolation joints.

1. Continue steel reinforcement across construction joints unless otherwise indicated. Do not continue reinforcement through sides of sidewalks strips unless otherwise indicated.
2. Keyed Joints: Provide preformed keyway-section forms or bulkhead forms with keys unless otherwise indicated. Embed keys at least 1-1/2 inches into concrete.
3. Doweled Joints: Install dowel bars and support assemblies at joints where indicated. Lubricate or coat with asphalt one-half of dowel length to prevent concrete bonding to one side of joint.

C. Isolation Joints: Form isolation joints of preformed joint-filler strips abutting concrete curbs, catch basins, manholes, inlets, structures, walks, other fixed objects, and where indicated.

1. Locate expansion joints at intervals of 50 feet unless otherwise indicated.
2. Extend joint fillers full width and depth of joint.
3. Terminate joint filler not less than 1/2 inch or more than 1 inch below finished surface if joint sealant is indicated.
4. Place top of joint filler flush with finished concrete surface if joint sealant is not indicated.
5. Furnish joint fillers in one-piece lengths. Where more than one length is required, lace or clip joint-filler sections together.
6. During concrete placement, protect top edge of joint filler with metal, plastic, or other temporary preformed cap. Remove protective cap after concrete has been placed on both sides of joint.

D. Contraction Joints: Form weakened-plane contraction joints, sectioning concrete into areas as indicated. Construct contraction joints for a depth equal to at least one-fourth of the concrete thickness, as follows, to match jointing of existing adjacent decorative concrete sidewalks:

1. Grooved Joints: Form contraction joints after initial floating by grooving and finishing each edge of joint with grooving tool to a 1/4-inch radius. Repeat grooving of contraction joints after applying surface finishes. Eliminate grooving-tool marks on concrete surfaces.

    a. Tolerance: Ensure that grooved joints are within 3 inches either way from centers of dowels.

2. Sawed Joints: Form contraction joints with power saws equipped with shatterproof abrasive or diamond-rimmed blades. Cut 1/8-inch-wide joints into concrete when cutting action will not tear, abrade, or otherwise damage surface and before developing random contraction cracks.

    a. Tolerance: Ensure that sawed joints are within 3 inches in both directions from centers of dowels.

3. Doweled Contraction Joints: Install dowel bars and support assemblies at joints where indicated. Lubricate or coat with asphalt one-half of dowel length to prevent concrete bonding to one side of joint.

E. Edging: After initial floating, tool edges of sidewalks, gutters, curbs, and joints in concrete with an edging tool to a 1/4-inch radius. Repeat tooling of edges after applying surface finishes. Eliminate edging-tool marks on concrete surfaces.

3.06 CONCRETE PLACEMENT

A. Before placing concrete, inspect and complete formwork installation, steel reinforcement, and items to be embedded or cast-in.

B. Remove snow, ice, or frost from subbase surface and steel reinforcement before placing concrete. Do not place concrete on frozen surfaces.

C. Moisten subbase to provide a uniform dampened condition at time concrete is placed. Do not place concrete around manholes or other structures until they are at required finish elevation and alignment.

D. Comply with ACI 301 requirements for measuring, mixing, transporting, and placing concrete.

E. Do not add water to concrete during delivery or at Project site. Do not add water to fresh concrete after testing.

F. Deposit and spread concrete in a continuous operation between transverse joints. Do not push or drag concrete into place or use vibrators to move concrete into place.

G. Consolidate concrete according to ACI 301 by mechanical vibrating equipment supplemented by hand spading, rodding, or tamping.

1. Consolidate concrete along face of forms and adjacent to transverse joints with an internal vibrator. Keep vibrator away from joint assemblies, reinforcement, or side forms. Use only

square-faced shovels for hand spreading and consolidation. Consolidate with care to prevent dislocating reinforcement and joint devices.

H. Screed sidewalks surface with a straightedge and strike off.

I. Commence initial floating using bull floats or darbies to impart an open-textured and uniform surface plane before excess moisture or bleedwater appears on the surface. Do not further disturb concrete surfaces before beginning finishing operations or spreading surface treatments.

3.07 FLOAT FINISHING

A. General: Do not add water to concrete surfaces during finishing operations.

B. Float Finish: Begin the second floating operation when bleedwater sheen has disappeared and concrete surface has stiffened sufficiently to permit operations. Float surface with power-driven floats or by hand floating if area is small or inaccessible to power units. Finish surfaces to true planes. Cut down high spots and fill low spots. Refloat surface immediately to uniform granular texture.

3.08 SPECIAL FINISHES

A. Monolithic Exposed-Aggregate Finish: Expose coarse aggregate in paving surface as follows:

1. Immediately after float finishing, spray-apply chemical surface retarder to paving according to manufacturer's written instructions.
2. Cover paving surface with plastic sheeting, sealing laps with tape, and remove when ready to continue finishing operations.
3. Without dislodging aggregate, remove mortar concealing the aggregate by lightly brushing surface with a stiff, nylon-bristle broom. Do not expose more than one-third of the average diameter of the aggregate and not more than one-half of the diameter of the smallest aggregate.
4. Fine-spray surface with water and brush. Repeat cycle of water flushing and brushing until cement film is removed from aggregate surfaces to depth required.

B. Rock-Salt Finish: After initial floating, troweling, or brooming, uniformly spread rock salt over paving surface at the rate of 5 lb/100 sq. ft.

1. Embed rock salt into plastic concrete with roller or magnesium float.
2. Cover paving surface with 1-mil- thick polyethylene sheet and remove sheet when concrete has hardened and seven-day curing period has elapsed.
3. After seven-day curing period, saturate concrete with water and broom-sweep surface to dissolve remaining rock salt, thereby leaving pits and holes.

3.09 CONCRETE PROTECTION AND CURING

A. General: Protect freshly placed concrete from premature drying and excessive cold or hot temperatures.

B. Comply with ACI 306.1 for cold-weather protection.

C. Evaporation Retarder: Apply evaporation retarder to concrete surfaces if hot, dry, or windy conditions cause moisture loss approaching 0.2 lb/sq. ft. x h before and during finishing operations. Apply according to manufacturer's written instructions after placing, screeding, and bull floating or darbying concrete but before float finishing.

D. Begin curing after finishing concrete but not before free water has disappeared from concrete surface.

E. Curing Compound: Apply immediately after final finishing. Apply uniformly in continuous operation by power spray or roller according to manufacturer's written instructions. Recoat areas subjected to heavy rainfall within three hours after initial application. Maintain continuity of coating, and repair damage during curing period.

3.10 SIDEWALK TOLERANCES

A. Comply with tolerances in ACI 117 and as follows:

1. Elevation: 3/4 inch.
2. Thickness: Plus 3/8 inch, minus 1/4 inch.
3. Surface: Gap below 10-foot-long, unleveled straightedge not to exceed 1/2 inch.
4. Lateral Alignment and Spacing of Dowels: 1 inch.
5. Vertical Alignment of Dowels: 1/4 inch.
6. Alignment of Dowel-Bar End Relative to Line Perpendicular to Sidewalks Edge: 1/4 inch per 12 inches of dowel.
7. Joint Spacing: 3 inches.
8. Contraction Joint Depth: Plus 1/4 inch, no minus.
9. Joint Width: Plus 1/8 inch, no minus.

3.11 FIELD QUALITY CONTROL

A. Testing Agency: Owner will engage a qualified testing agency to perform tests and inspections.

B. Testing Services: Testing of composite samples of fresh concrete obtained according to ASTM C172/C172M shall be performed according to the following requirements:

1. Testing Frequency: Obtain at least one composite sample for each 100 cu. yd. or fraction thereof of each concrete mixture placed each day.

   a. When frequency of testing will provide fewer than five compressive-strength tests for each concrete mixture, testing shall be conducted from at least five randomly selected batches or from each batch if fewer than five are used.

2. Slump: ASTM C143/C143M; one test at point of placement for each composite sample, but not less than one test for each day's pour of each concrete mixture. Perform additional tests when concrete consistency appears to change.
3. Air Content: ASTM C231/C231M, pressure method; one test for each composite sample, but not less than one test for each day's pour of each concrete mixture.
4. Concrete Temperature: ASTM C1064/C1064M; one test hourly when air temperature is 40 deg F and below and when it is 80 deg F and above, and one test for each composite sample.

5. Compression Test Specimens: ASTM C31/C31M; cast and laboratory cure one set of three standard cylinder specimens for each composite sample.
6. Compressive-Strength Tests: ASTM C39/C39M; test one specimen at seven days and two specimens at 28 days.

   a. A compressive-strength test shall be the average compressive strength from two specimens obtained from same composite sample and tested at 28 days.

C. Strength of each concrete mixture will be satisfactory if average of any three consecutive compressive-strength tests equals or exceeds specified compressive strength and no compressive-strength test value falls below specified compressive strength by more than 500 psi.

D. Test results shall be reported in writing to Architect, concrete manufacturer, and Contractor within 48 hours of testing. Reports of compressive-strength tests shall contain Project identification name and number, date of concrete placement, name of concrete testing and inspecting agency, location of concrete batch in Work, design compressive strength at 28 days, concrete mixture proportions and materials, compressive breaking strength, and type of break for both 7- and 28-day tests.

E. Nondestructive Testing: Impact hammer, sonoscope, or other nondestructive device may be permitted by Architect but will not be used as sole basis for approval or rejection of concrete.

F. Additional Tests: Testing and inspecting agency shall make additional tests of concrete when test results indicate that slump, air entrainment, compressive strengths, or other requirements have not been met, as directed by Architect.

G. Decorative concrete sidewalks will be considered defective if it does not pass tests and inspections.

H. Additional testing and inspecting, at Contractor's expense, will be performed to determine compliance of replaced or additional work with specified requirements.

I. Prepare test and inspection reports.

3.12 REPAIR AND PROTECTION

A. Remove and replace decorative concrete sidewalks that is broken or damaged or does not comply with requirements in this Section. Remove work in complete sections from joint to joint unless otherwise approved by Architect.

B. Protect decorative concrete sidewalks from damage. Exclude traffic from sidewalks for at least 14 days after placement. When construction traffic is permitted, maintain sidewalks as clean as possible by removing surface stains and spillage of materials as they occur.

C. Maintain decorative concrete sidewalks free of stains, discoloration, dirt, and other foreign material. Sweep sidewalks not more than two days before date scheduled for Substantial Completion inspections.

END OF SECTION

INFORMATION TECHNOLOGY BUILDING
FORT BEND COUNTY

1419 EUGENE HEIMANN CIRCLE | RICHMOND TEXAS 77469

SPECIFICATIONS / PROJECT MANUAL:

Jordan Consultants
JORDAN CONSULTANTS
PO Box 7825
Houston Texas 77270
713 366 0320 PH

TELECOMMUNICATIONS & SECURITY ENGINEERS:

PGA ENGINEERS, INC
PGA ENGINEERS
3838 North Sam Houston Parkway East
Suite 550
Houston Texas 77032
346 570 2418 PH
pgaengineers.com

MECHANCIAL ELECTRICAL PLUMBING ENGINEER:

Infrastructure Associates
INFRASTRUCTURE ASSOCIATES
6117 Richmond Avenue
Suite 900
Houston Texas 77057
713 622 0120 PH
iahouston.com

STRUCTURAL ENGINEER:

Dally + ASSOCIATES
STRUCTURAL | CIVIL
DALLY + ASSOCIATES, INC
9800 Richmond Avenue . Suite 460
Houston Texas 77042
713 337 8881 PH
dallyassociates.com

LANDSCAPE ARCHITECT:

Wong & Associates
WONG & ASSOCIATES
PO Box 2028
Bellaire Texas 77042
713 777 9198 PH

CIVIL ENGINEER:

ISANI
ISANI CONSULTANT ENGINEERS
10448 Westoffice Drive
Houston Texas 77042
713 747 2399 PH
isaniconsultants.com

ARCHITECT:

FS GROUP® ARCHITECTS
FS GROUP ARCHITECTS
16575 Village Drive
Houston Texas 77040
713 344 1752 PH
fsdesignbuild.com

THE STATE OF TEXAS
FORT BEND COUNTY

ISSUED FOR PROPOSALS AND PERMIT

ISSUED FOR
ISSUED FOR PROPOSALS AND PERMIT

ISSUED DATE
05/15/2024

PROFESSIONAL SEAL

REGISTERED ARCHITECT
FAKHRUDDIN N. SABIR
22631
STATE OF TEXAS

5/15/2024

REVISIONS

No.	Description	Date

ABBREVIATIONS

A
@ AT
A, AMP AMPERES
AB ANCHOR BOLT
ABV ABOVE
A/C AIR CONDITIONING
ACOU ACOUSTICAL
ADA AMERICANS WITH DISABILITIES ACT
ADJ ADJUSTABLE
ADMIN ADMINISTRATIVE
AED AUTOMATED EXTERNAL DEFIBRILATOR
AFC ABOVE FINISHED CEILING
AFF ABOVE FINISHED FLOOR
AGG AGGREGATE
AHU AIR HANDLING UNIT
AL.ST. ALUMINUM STOREFRONT
ALUM ALUMINUM
ALT ALTERNATE
∠ ANGLE
ANOD ANODIZED
AP ACCESS PANEL
APC ACOUSTICAL PANEL CEILING
APPROX APPROXIMATELY
ARCH, ARCHL ARCHITECTURAL
ASS'Y ASSEMBLY
AUX AUXILIARY
AWI ARCHITECTURAL WOODWORK INSTITUTE

B
BD BOARD
BLDG BUILDING
BLK BLOCK
BLKG BLOCKING
BLKHD BULKHEAD
BM BEAM
BOS BOTTOM OF STEEL
BOT BOTTOM
BRZ BRONZE
BTU BRITISH THERMAL UNIT
BUR BUILT-UP ROOF

C
C CENTIGRADE
CAB CABINET
CBB CEMENTITIOUS BACKER BOARD
CFMF COLD-FORMED METAL FRAMING
CH COAT HOOK
CHBD CHALK BOARD
CI CAST IRON
CJ CONTROL JOINT
CL, ℄ CENTER LINE
CLG CEILING
CLO CLOSET
CLR CLEAR
CMU CONCRETE MASONRY UNIT
COL COLUMN
CONC CONCRETE
CONNX CONNECTION
CONST. CONSTRUCTION
CONT CONTINUOUS
CRDR CORRIDOR
CRS COURSE
CT CERAMIC TILE
CTK CURTAIN TRACK
CU CUBIC
CUST CUSTODIAN
CW CURTAIN WALL
CWFP CEMENTITIOUS WOOD FIBER PLANK

D
DBL DOUBLE
DEF DEFORMED
DF DRINKING FOUNTAIN
DIA, Ø DIAMETER
DIAG DIAGRAM
DIM DIMENSION
DISP DISPENSER
DIV DIVISION
DN DOWN
DP DAMPPROOFING
DR DOOR
DS DOWNSPOUT
DTL DETAIL
DWG DRAWING
DWLS DOWELS
DWR DRAWER

E
E, ELEC ELECTRICAL
EA EACH
EDF ELECTRIC DRINKING FOUNTAIN
EF EXHAUST FLUE
EDF ELECTRIC DRINKING FOUNTAIN
EGSB EXTERIOR GYPSUM SOFFIT BOARD
EIFS EXTERIOR INSULATED FINISH SYSTEM
EJ EXPANSION JOINT
EL, ELEV ELEVATION
EQ EQUAL
EQUIP EQUIPMENT
ETC ET CETERA
EW EACH WAY
EWC ELECTRIC WATER COOLER
EXGR EXISTING GRADE
EXH EXHAUST
EXIST, EXG EXISTING
EXP EXPANSION
EXPD EXPOSED
EXT EXTERIOR

F
F FAHRENHEIT
FA FIRE ALARM
FBC FORT BEND COUNTY TEXAS
FC FIRE CODE
FD FLOOR DRAIN
FE FIRE EXTINGUISHER
FEC FIRE EXTINGUISHER CABINET
FF FINISH FLOOR
FFE FINISH FLOOR ELEVATION
FGD FINISH GRADE
FHC FIRE HOSE CABINET
FIN FINISH
FLASH FLASHING
FLR FLOOR
FOC FACE OF CONCRETE
FOM FACE OF MASONRY
FOLD PART FOLDING PARTITION
FRP FIBER REINFORCED PLASTIC
FRT FIRE-RETARDANT TREATED WOOD
FS FOOT SCRAPER
FT FEET
Fy YIELD STRESS
FUR FURRING

G
G GAS
GA GAUGE
GALV GALVANIZED
GB GRAB BAR
GC GENERAL CONTRACTOR
GD GRADE
GDW, GYP.BD. GYPSUM DRYWALL
GL GLASS
GMMU GLASS MESH MORTAR UNITS
GND GROUND
GSFT GLAZED STRUCTURAL FACING TILE
GYP GYPSUM

H
H-CONC HARDENED CONCRETE
HB, HBB HOSE BIBB
HC HANDICAPPED, HOLLOW CORE
HCFV HOLLOW CORE FINISH VENEER
HD HEAD, HEADED, HEAVY DUTY
HDF HANDICAP DRINKING FOUNTAIN
HDG HOT-DIPPED GALVANIZED
HDWR HARDWARE
HEWC HANDICAP ELECTRIC WATER COOLER
HLB HORIZONTAL LOUVER BLINDS
HM HOLLOW METAL
HORIZ, H HORIZONTAL
HR, HRS HOUR, HOURS
HT HEIGHT
HWD HARD WOOD

I
IAW IN ACCORDANCE WITH
ID INSIDE DIAMETER, DIMENSION
IG INSULATING GLASS
IN INCH, INCHES
INC INCANDESCENT
INCL INCLUDING
INSUL INSULATION
INT INTERIOR
IRWC IMPACT-RESISTANT WALL COVERING

J
JAN JANITOR
JST JOIST
JT JOINT

L
L ANGLE SHAPE
LAM LAMINATE
LAV LAVATORY
LB POUND
LF LINEAR FOOT
LG LENGTH
LIB LIBRARY
LLH LONG LEG HORIZONTAL
LLV LONG LEG VERTICAL
LSD LIQUID SOAP DISPENSER
LVR LOUVER
LW LIGHTWEIGHT

M
MAS MASONRY
MAINT MAINTENANCE
MAX MAXIMUM
MB MOP BASIN
MC MEDICINE CABINET
MECH, MECHL MECHANICAL
MFCS MINERAL FIBER CEMENT SHINGLES
MFR MANUFACTURER
MGR MANAGER
MH MANHOLE
MID MIDDLE
MIN MINIMUM
MIR MIRROR
MISC MISCELLANEOUS
MJ MASONRY EXPANSION JOINT
MKBD MARKER BOARD
MM MILLIMETER
MMB MEMBRANE
MO MASONRY OPENING
MPH MILES PER HOUR
MTCS MULTI-TONE COLOR SYSTEM
MTD MOUNTED
MTL,MET METAL
MULL MULLION

N
NA NOT APPLICABLE
NEG NEGATIVE
NIC NOT IN CONTRACT
NO, # NUMBER
NTS NOT TO SCALE

O
OC ON CENTER
OCD OVERHEAD COILING DOOR
OCG OVERHEAD COILING GRILL
OD OUTSIDE DIAMETER/DIMENSION
OFCI OWNER FURNISHED CONTRACTOR INSTALLED
OFF OFFICE
OH OVERHEAD
OPH OPPOSITE HAND
OPNG OPENING
OPP OPPOSITE
ORD OVERFLOW ROOF DRAIN
ORD OVERFLOW ROOF DRAIN

P
PA PUBLIC ADDRESS
PAR PARALLEL
PCP PORTLAND CEMENT PLASTER
PEN PENETRATION
PERP PERPENDICULAR
PG PLATE GLASS
PGB PREDECORATED GYPSUM BOARD
PL, PL PLATE
PLAM PLASTIC LAMINATE
PLAS PLASTER
PLN PLAN
PLT PLASTIC
PLYWD PLYWOOD
PNL PANEL
POS POSITIVE
PPNL PLASTIC LAMINATE PANEL
PR PAIR
PREFAB PREFABRICATED
PREFIN, PF PREFINISHED
PNT PAINT, PAINTED
PNTGR PAINT GRADE
PT PRESSURE TREATED
PTD PAPER TOWEL DISPENSER
PTN PARTITION
PVC POLYVINYL CHLORIDE
PVMT PAVEMENT
PVR PAVER
POR PORCELAIN

Q
QA QUALITY ASSURANCE
QT QUARRY TILE

R
R RADIUS
RAF RESILIENT ATHLETIC FLOORING
RASF RUBBERIZED ASPHALT SHEET FLASHING
RBR RUBBER
RCP REINFORCED CONCRETE PIPE
RD ROOF DRAIN
REINF REINFORCED, REINFORCEMENT
REF REFER, REFERENCE
REP REPRESENTATIVE
REQ REQUIRED
RO ROUGH OPENING
RM ROOM
RV ROOF VENT
RWAF RESILIENT WOOD ATHLETIC FLOORING

S
SACB SOUND ABSORBING CONCRETE BLOCK
SB SPLASH BLOCK
SC SOLID CORE
SCFV SOLID CORE FLUSH VENEER
SCWV SOLID CORE WOOD VENEER
SCHED SCHEDULE
SD SMOKE DETECTOR
SEC SECONDARY
SF SQUARE FEET
SGFT STRUCTURAL GLAZED FACING TILE
SGL SINGLE
SH, SHT SHEET
SHR SHOWER
SIM SIMILAR
SJ SAWN CONTROL JOINT
SLD SEALED
SND SANITARY NAPKIN DISPOSAL UNIT
SNT SEALANT
SNV SANITARY NAPKIN VENDOR
SPA SPACES
SQ SQUARE
SR SHOWER ROD
SS STAINLESS STEEL
SSK SERVICE SINK
STD STANDARD
STL STEEL
STOR STORAGE
STRUCT STRUCTURE, STRUCTURAL
SUS SUSPENDED

T
T, TEL TELEPHONE
T TOP
TAS TEXAS ACCESSIBILITY STANDARDS
TCEQ TEXAS COMMISSION ON ENVIRONMENTAL QUALITY
TDLR TEXAS DEPARTMENT OF LICENSING AND REGULATION
TECH TECHNICAL
TEMP TEMPERATURE
TKBD TACKBOARD
TKS TACK STRIP
TKSF TACK SURFACE
TLT TOILET
TOC, TC TOP OF CURB
TOD TOP OF DRAIN
TOM TOP OF MASONRY
TOP TOP OF PAVEMENT
TOS TOP OF STEEL
TP TOILET PARTITION, TOP OF PAVEMENT
TPO THERMOPLASTIC POLYOLEFIN
TW TOP OF WALL
TX TEXAS
TXDOT TEXAS DEPARTMENT OF TRANSPORTATION
TYP TYPICAL

U
UBC UNIFORM BUILDING CODE
UDO UNIFIED DEVELOPMENT ORDINANCE
UNO, UON UNLESS OTHERWISE NOTED
URS URINAL SCREEN
UTIL UTILITY

V
V VOLTS
V, VERT VERTICAL
VCT VINYL COMPOSITION TILE
VEND VENDING
VEST VESTIBULE
VTR VENT THROUGH ROOF

W
W WATTS
W/ WITH
WB WIND BRACE
WBBP WIND BRACE BASEPLATE
WC WATER CLOSET
WD WOOD
WH WATER HEATER
WNDW WINDOW
WO WITHOUT
WOM WOMEN
WP WEATHERPROOF
WPG WATERPROOFING
WR WASTE RECEPTICLE
WRGBB WATER RESISTANT GYPSUM BACKER BOARD
WR-WD WATER-RESISTIVE TREATED WOOD
WSTRIP WEATHER-STRIP
WT WEIGHT
WWF WELDED-WIRE FABRIC

PLAN SYMBOLS

+445 NEW OR REQUIRED POINT ELEVATION
+ 233.4 EXISTING POINT ELEVATION
334 EXISTING CONTOURS
223 NEW CONTOURS
NAME A101 ROOM NAME AND NUMBER
10 M COLUMN REFERENCE GRID (LETTER,NUMBER)
101 DOOR NUMBER
A1 WALL TYPE
1 A3.01 SECTION
1 A3.01 1 A3.01 BUILDING SECTION
1 A.1 ELEVATION
1 A.1 DETAIL
A WINDOW TYPE
1 FRAME TYPE
LEVEL LINE
GLZ COLOR MARK (LETTER)
1 REVISION # (NUMBER)
1 KEY NOTE
MATCH LINE
TRUE NORTH
PLAN NORTH

MATERIAL LEGEND

EARTH (UNDISTURBED)
EARTH (COMPACTED)
POROUS FILL (STONE OR GRAVEL, ETC.)
STRUCTURAL CONCRETE
BRICK (COMMON OR FACE)
CONCRETE MASONRY UNITS (CMU)
CUT STONE
METAL (LARGE SCALE)
METAL (SMALL SCALE)
RESILIENT FLOORING
ACOUSTICAL CEILING TILE
TERRAZZO
PLASTER, SAND, CEMENT, GROUT
GYPSUM DRYWALL
CERAMIC TILE
GLASS
RIGID INSULATION
BATT INSULATION
ROUGH WOOD (CONTINUOUS)
ROUGH WOOD (NON-CONTINUOUS)
FINISH WOOD
PLYWOOD

AREA MAP

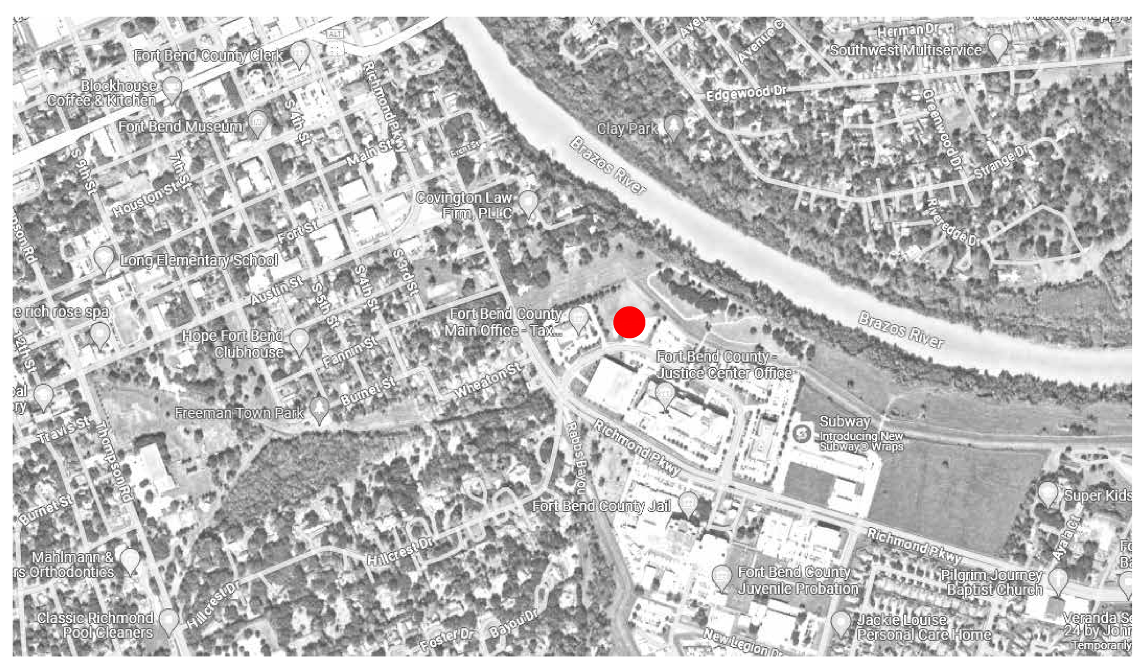

VICINITY MAP

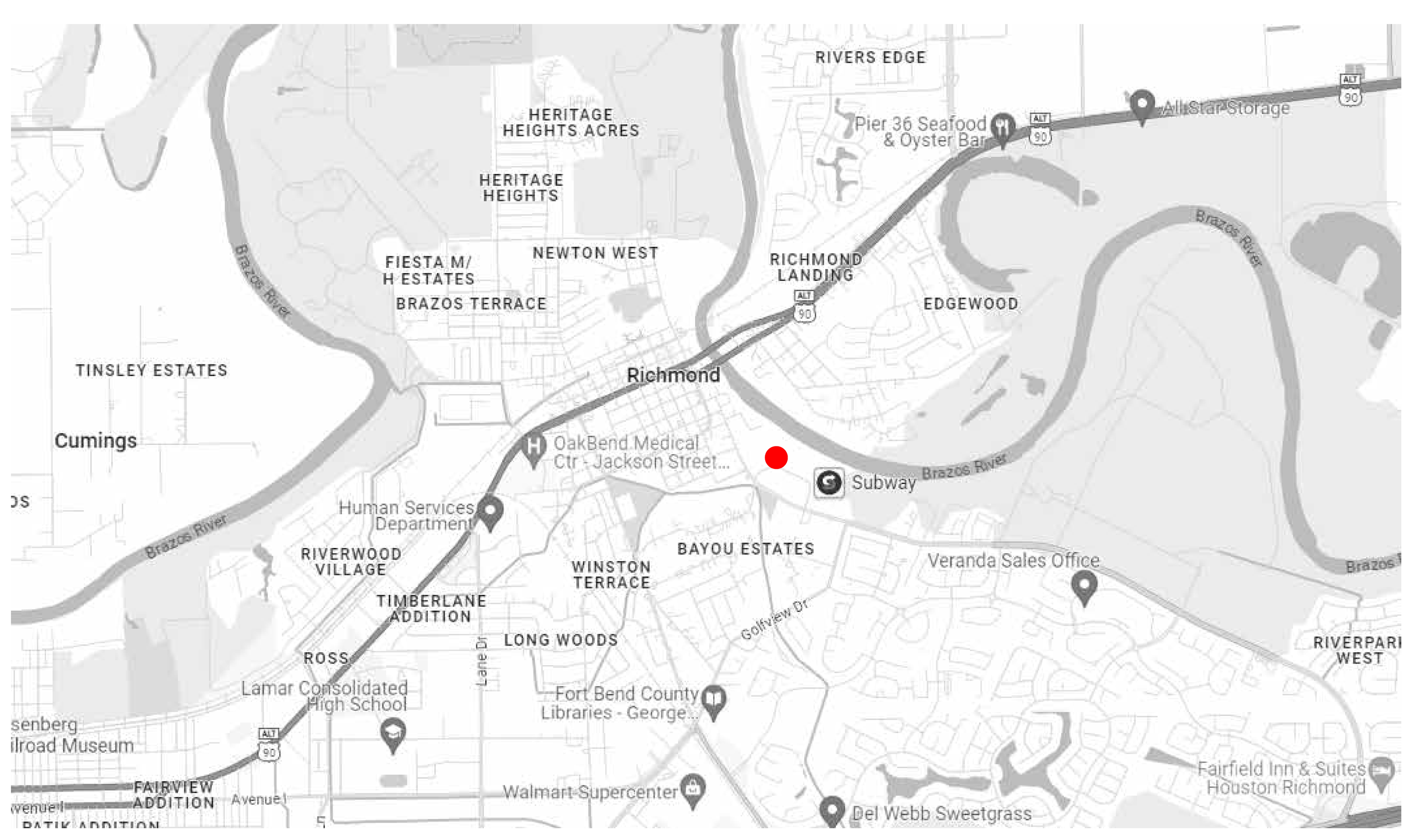

DRAWING SHEET INDEX

GENERAL

MARK	SHEET NUMBER	SHEET NAME	ISSUE DATE	REVISION DATE
1	G000	COVER	05/15/2024	
2	G001	SHEET INDEX	05/15/2024	
3	G002	CODE ANALYSIS	05/15/2024	
4	G003	LIFE SAFETY PLANS	05/15/2024	
5	G004	SITE PHOTOMETRICS	05/15/2024	
6	D100	SITE DEMOLITION PLAN	05/15/2024	

CIVIL

MARK	SHEET NUMBER	SHEET NAME	ISSUE DATE	REVISION DATE
7	C0.01	GENERAL NOTES	05/15/2024	
8	C1.00	DEMOLITION PLAN	05/15/2024	
9	C2.00	CIVIL SITE PLAN	05/15/2024	
10	C3.00	PAVEMENT PLAN	05/15/2024	
11	C3.01	GRADING PLAN	05/15/2024	
12	C3.02	DRAINAGE AREA MAP	05/15/2024	
13	C3.03	DRAINAGE CALCULATIONS	05/15/2024	
14	C3.04	DRAINAGE PLAN	05/15/2024	
15	C4.00	SITE UTILITY PLAN	05/15/2024	
16	C5.00	STORM WATER POLLUTION PREVENTION PLAN (SWPPP)	05/15/2024	
17	C5.01	SWPPP DETAILS - 1	05/15/2024	
18	C6.01	CIVIL DETAILS - 1	05/15/2024	
19	C6.02	CIVIL DETAILS - 2	05/15/2024	
20	C6.03	CIVIL DETAILS - 3	05/15/2024	
21	C6.04	CIVIL DETAILS - 4	05/15/2024	
22	C6.05	CIVIL DETAILS - 5	05/15/2024	
23	C6.06	CIVIL DETAILS - 6	05/15/2024	
24	C6.07	CIVIL DETAILS - 7	05/15/2024	
25	C6.08	CIVIL DETAILS - 8	05/15/2024	
26	C6.09	CIVIL DETAILS - 9	05/15/2024	

LANDSCAPE

MARK	SHEET NUMBER	SHEET NAME	ISSUE DATE	REVISION DATE
27	L1.1	LANDSCAPE PLAN	05/15/2024	
28	L2.1	IRRIGATION PLAN	05/15/2024	

STRUCTURE

MARK	SHEET NUMBER	SHEET NAME	ISSUE DATE	REVISION DATE
29	S001	3D VIEW AND SHEET LIST	05/15/2024	
30	S101	GENERAL STRUCTURAL CRITERIA	05/15/2024	
31	S102	GENERAL STRUCTURAL CRITERIA	05/15/2024	
32	S110	FOUNDATION PLAN LEVEL 1	05/15/2024	
33	S111	FRAMING PLAN LEVEL 2	05/15/2024	
34	S112	FRAMING PLAN LEVEL 3	05/15/2024	
35	S150	ROOF FRAMING PLAN	05/15/2024	
36	S301	SPREAD FOOTING & PLINTH SCHEDULE & DETAILS	05/15/2024	
37	S302	GRADE BEAM SCHEDULE AND DETAILS	05/15/2024	
38	S303	STEEL COLUMN SCHEDULE & DETAILS	05/15/2024	
39	S401	TYPICAL FOUNDATION DETAILS	05/15/2024	
40	S402	TYPICAL SITE FOUNDATION DETAILS	05/15/2024	
41	S403	FOUNDATION DETAILS	05/15/2024	
42	S404	FOUNDATION DETAILS	05/15/2024	
43	S501	TYPICAL FRAMING DETAILS	05/15/2024	
44	S502	TYPICAL FRAMING DETAILS	05/15/2024	
45	S503	TYPICAL COMPOSITE FRAMING DETAILS	05/15/2024	
46	S504	TYPICAL ROOF FRAMING DETAILS	05/15/2024	
47	S505	TYPICAL ROOF FRAMING DETAILS	05/15/2024	
48	S601	COMPOSITE FRAMING DETAILS	05/15/2024	
49	S701	FRAMING DETAILS	05/15/2024	
50	S702	LOW ROOF FRAMING DETAILS	05/15/2024	
51	S801	BRACE ELEVATIONS & DETAILS	05/15/2024	
52	S802	BRACE ELEVATIONS	05/15/2024	

ARCHITECTURE

MARK	SHEET NUMBER	SHEET NAME	ISSUE DATE	REVISION DATE
53	A100	ARCHITECTURAL SITE PLAN	05/15/2024	
54	A101	SWEPT PATH ANALYSIS	05/15/2024	
55	A102	SITE DETAILS	05/15/2024	
56	A103	FENCE AND GATE DETAILS	05/15/2024	
57	A104	FENCE AND GATE DETAILS	05/15/2024	
58	A105	SITE DETAILS	05/15/2024	
59	A106	SITE DETAILS	05/15/2024	
60	A107	SITE DETAILS	05/15/2024	
61	A108	SITE DETAILS	05/15/2024	
62	A110	FLOOR PLAN LEVEL 1	05/15/2024	
63	A111	FLOOR PLAN LEVEL 2	05/15/2024	
64	A112	FLOOR PLAN LEVEL 3	05/15/2024	
65	A120	REFLECTED CEILING PLAN LEVEL 1	05/15/2024	
66	A121	REFLECTED CEILING PLAN LEVEL 2	05/15/2024	
67	A122	REFLECTED CEILING PLAN LEVEL 3	05/15/2024	
68	A130	ENLARGED RCP TRAINING ROOM 102	05/15/2024	
69	A150	ROOF PLAN	05/15/2024	
70	A151	ENLARGED ROOF PLANS	05/15/2024	
71	A200	EXTERIOR ELEVATIONS SOUTH & WEST	05/15/2024	
72	A201	EXTERIOR ELEVATIONS NORTH & EAST	05/15/2024	
73	A216	EXT ELEVATIONS ENLG FEATURE WALL	05/15/2024	
74	A217	EXTERIOR ELEVATIONS STAIR - 3 WALLS	05/15/2024	
75	A300	BUILDING SECTIONS	05/15/2024	
76	A310	WALL SECTIONS	05/15/2024	
77	A311	WALL SECTIONS	05/15/2024	
78	A312	WALL SECTIONS	05/15/2024	
79	A400	VESTIBULE ENLARGED PLANS & ELEVATIONS	05/15/2024	
80	A401	VESTIBULE SECTIONS & DETAILS	05/15/2024	
81	A410	ENLARGED PLAN RESTROOMS	05/15/2024	
82	A411	ELEVATIONS RESTROOMS 105 & 106	05/15/2024	
83	A412	ELEVATIONS RESTROOMS 205 & 206	05/15/2024	
84	A413	ELEVATIONS RESTROOMS 305 & 306	05/15/2024	
85	A414	ELEVATIONS RESTROOMS	05/15/2024	
86	A415	ENLARGED PLAN SHOWERS 131 & 132	05/15/2024	
87	A416	ENLARGED PLAN BREAK ROOMS & COFFEE BARS	05/15/2024	
88	A417	ENLARGED PLAN WORK ROOMS & TRAINING ROOM	05/15/2024	
89	A430	VERTICAL CIRCULATION STAIR 1 ENLG PLANS	05/15/2024	
90	A431	VERTICAL CIRCULATION STAIR 1 SECTIONS	05/15/2024	
91	A432	VERTICAL CIRCULATION STAIR 1 SECTIONS	05/15/2024	
92	A433	VERTICAL CIRCULATION STAIR 1 SECTIONS	05/15/2024	
93	A434	VERTICAL CIRCULATION STAIR 1 DETAILS	05/15/2024	
94	A440	VERTICAL CIRCULATION STAIR 2 ENLG PLANS	05/15/2024	
95	A441	VERTICAL CIRCULATION STAIR 2 SECTIONS	05/15/2024	
96	A442	VERTICAL CIRCULATION STAIR 2 SECTIONS	05/15/2024	
97	A443	VERTICAL CIRCULATION STAIR 2 SECTIONS	05/15/2024	
98	A450	VERTICAL CIRCULATION STAIR 3 ENLG PLANS	05/15/2024	
99	A451	VERTICAL CIRCULATION STAIR 3 SECTIONS	05/15/2024	
100	A452	VERTICAL CIRCULATION STAIR 3 SECTIONS	05/15/2024	
101	A453	VERTICAL CIRCULATION STAIR 3 SECTIONS	05/15/2024	
102	A460	VERTICAL CIRCULATION ELEVATOR 1	05/15/2024	
103	A461	VERTICAL CIRCULATION ELEVATOR 2	05/15/2024	
104	A462	VERTICAL CIRCULATION ELEVATOR DETAILS	05/15/2024	
105	A463	VERTICAL CIRCULATION ELEV 1 AND 2 FINISHES	05/15/2024	
106	A500	SECTION DETAILS	05/15/2024	
107	A501	SECTION DETAILS	05/15/2024	
108	A502	DETAILS	05/15/2024	
109	A503	DETAILS	05/15/2024	
110	A504	DETAILS	05/15/2024	
111	A510	ENLARGED DETAILS	05/15/2024	
112	A600	DOOR SCHEDULE	05/15/2024	
113	A601	DOOR DETAILS	05/15/2024	
114	A610	WINDOW SCHEDULE EXTERIOR TYPES	05/15/2024	
115	A611	WINDOW SCHEDULE EXTERIOR TYPES	05/15/2024	
116	A612	WINDOW SCHEDULE EXTERIOR TYPES	05/15/2024	
117	A615	WINDOW SCHEDULE BLDG EXTERIOR SOUTH	05/15/2024	
118	A616	WINDOW SCHEDULE BLDG EXTERIOR EAST	05/15/2024	
119	A617	WINDOW SCHEDULE BLDG EXTERIOR NORTH	05/15/2024	
120	A618	WINDOW SCHEDULE BLDG EXTERIOR WEST	05/15/2024	
121	A620	WINDOW SCHEDULE INTERIOR TYPES	05/15/2024	
122	A621	WINDOW SCHEDULE INTERIOR TYPES & DETAILS	05/15/2024	

ARCHITECTURE (Continued)

MARK	SHEET NUMBER	SHEET NAME	ISSUE DATE	REVISION DATE
123	A700	INTERIOR ELEVATIONS LOBBY 100	05/15/2024	
124	A701	INTERIOR ELEVATIONS LOBBY 100	05/15/2024	
125	A702	INTERIOR ELEVATIONS LOBBY 100, 200 & 300	05/15/2024	
126	A710	INTERIOR ELEVATIONS TRAINING ROOM 102	05/15/2024	
127	A711	OPERABLE PARTITION DETAILS	05/15/2024	
128	A720	INTERIOR ELEVATIONS LEVEL 1 BULLPEN 120	05/15/2024	
129	A730	INTERIOR ELEVATIONS LEVEL 2 BULLPEN 220	05/15/2024	
130	A731	INTERIOR ELEVATIONS LEVEL 2 BULLPEN 202	05/15/2024	
131	A740	INTERIOR ELEVATIONS LEVEL 3 BULLPEN 320	05/15/2024	
132	A750	INTERIOR ELEVATIONS - MISC	05/15/2024	
133	A751	INTERIOR ELEVATIONS - MISC	05/15/2024	
134	A760	INTERIOR ELEVATIONS RECEPTION BACK WALL	05/15/2024	
135	A761	INTERIOR ELEVATIONS ENLG LOBBY WEST WALL	05/15/2024	
136	A800	CASEWORK - RECEPTION DESK	05/15/2024	
137	A801	CASEWORK - RECEPTION DESK	05/15/2024	
138	A802	CASEWORK - BREAKROOM	05/15/2024	
139	A803	CASEWORK - WORK ROOM & COFFEE BAR	05/15/2024	
140	A804	CASEWORK DETAILS	05/15/2024	
141	A900	ROOM FINISH SCHEDULE	05/15/2024	
142	A901	ROOM FINISH LEGEND	05/15/2024	
143	A910	FINISH PLAN LEVEL 1	05/15/2024	
144	A911	FINISH PLAN LEVEL 2	05/15/2024	
145	A912	FINISH PLAN LEVEL 3	05/15/2024	
146	A920	FURNITURE PLAN LEVEL 1	05/15/2024	
147	A921	FURNITURE PLAN LEVEL 2	05/15/2024	
148	A922	FURNITURE PLAN LEVEL 3	05/15/2024	
149	A950	WALL PARTITIONS	05/15/2024	
150	A951	WALL PARTITIONS	05/15/2024	

FIRE PROTECTION

MARK	SHEET NUMBER	SHEET NAME	ISSUE DATE	REVISION DATE
151	FP101	FIRE PROTECTION PLAN	05/15/2024	
152	FP102	FIRE PROTECTION PLAN	05/15/2024	
153	FP103	FIRE PROTECTION PLAN	05/15/2024	

PLUMBING

MARK	SHEET NUMBER	SHEET NAME	ISSUE DATE	REVISION DATE
154	P101	NOTES AND LEGEND	05/15/2024	
155	P102	FIXTURE SCHEDULE	05/15/2024	
156	P201	FLOOR PLAN LEVEL 1 - DOMESTIC	05/15/2024	
157	P202	FLOOR PLAN LEVEL 2 - DOMESTIC	05/15/2024	
158	P203	FLOOR PLAN LEVEL 3 - DOMESTIC	05/15/2024	
159	P301	FLOOR PLAN LEVEL 1 - SANITARY	05/15/2024	
160	P302	FLOOR PLAN LEVEL 2 - SANITARY	05/15/2024	
161	P303	FLOOR PLAN LEVEL 3 - SANITARY	05/15/2024	
162	P401	DETAILS	05/15/2024	
163	P402	RISER DIAGRAM - DOMESTIC	05/15/2024	
164	P403	RISER DIAGRAM - SANITARY	05/15/2024	

MECHANICAL

MARK	SHEET NUMBER	SHEET NAME	ISSUE DATE	REVISION DATE
165	M100	SYMBOLS, NOTES, AND LEGENDS	05/15/2024	
166	M101	SCHEDULE	05/15/2024	
167	M102	SCHEDULE	05/15/2024	
168	M201	FLOOR PLAN LEVEL 1 - HVAC	05/15/2024	
169	M202	FLOOR PLAN LEVEL 2 - HVAC	05/15/2024	
170	M203	FLOOR PLAN LEVEL 3 - HVAC	05/15/2024	
171	M204	PIPING PLAN LEVEL 1 - HVAC	05/15/2024	
172	M205	PIPING PLAN LEVEL 2 - HVAC	05/15/2024	
173	M206	PIPING PLAN LEVEL 3 - HVAC	05/15/2024	
174	M211	ENLARGED DATA CENTER FLOOR PLAN - HVAC	05/15/2024	
175	M212	ENLARGED MECHANICAL ROOMS - HVAC	05/15/2024	
176	M213	ENLARGED MECHANICAL YARD - HVAC	05/15/2024	
177	M401	DETAILS	05/15/2024	
178	M402	DETAILS	05/15/2024	
179	M501	CHILLED WATER PIPING SCHEMATIC DIAGRAM - HVAC	05/15/2024	
180	M502	CONTROLS	05/15/2024	
181	M503	CONTROLS	05/15/2024	
182	MEP101	SITE PLAN - MEP	05/15/2024	
183	MEP102	ROOF PLAN - MEP	05/15/2024	

ELECTRICAL

MARK	SHEET NUMBER	SHEET NAME	ISSUE DATE	REVISION DATE
184	E101	NOTES AND LEGEND	05/15/2024	
185	E102	NOTES AND LEGEND	05/15/2024	
186	E111	ONE LINE DIAGRAM	05/15/2024	
187	E121	PANEL SCHEDULES	05/15/2024	
188	E122	PANEL SCHEDULES	05/15/2024	
189	E201	FLOOR PLAN LEVEL 1 - POWER	05/15/2024	
190	E202	FLOOR PLAN LEVEL 2 - POWER	05/15/2024	
191	E203	FLOOR PLAN LEVEL 3 - POWER	05/15/2024	
192	E204	ENLARGED FLOOR PLANS - POWER	05/15/2024	
193	E211	FLOOR PLAN LEVEL 1 - EQUIPMENT	05/15/2024	
194	E212	FLOOR PLAN LEVEL 2 - EQUIPMENT	05/15/2024	
195	E213	FLOOR PLAN LEVEL 3 - EQUIPMENT	05/15/2024	
196	E301	FLOOR PLAN LEVEL 1 - LIGHTING	05/15/2024	
197	E302	FLOOR PLAN LEVEL 2 - LIGHTING	05/15/2024	
198	E303	FLOOR PLAN LEVEL 3 - LIGHTING	05/15/2024	
199	E401	FLOOR PLAN LEVEL 1 - FIRE ALARM	05/15/2024	
200	E402	FLOOR PLAN LEVEL 2 - FIRE ALARM	05/15/2024	
201	E403	FLOOR PLAN LEVEL 3 - FIRE ALARM	05/15/2024	
202	E501	DETAILS	05/15/2024	
203	E502	DETAILS	05/15/2024	
204	E601	BASIS OF DESIGN - UPS-A & UPS-B	05/15/2024	
205	E602	BASIS OF DESIGN - GENERATOR	05/15/2024	

TELECOMMUNICATION & SECURITY

MARK	SHEET NUMBER	SHEET NAME	ISSUE DATE	REVISION DATE
206	T-000	TELECOMMUNICATIONS - LEGEND AND NOTES	05/15/2024	
207	T-100	TELECOMMUNICATIONS - SITE PLAN	05/15/2024	
208	T-101	TELECOMMUNICATIONS - FLOOR PLAN - LEVEL 1	05/15/2024	
209	T-102	TELECOMMUNICATIONS - FLOOR PLAN - LEVEL 2	05/15/2024	
210	T-103	TELECOMMUNICATIONS - FLOOR PLAN - LEVEL 3	05/15/2024	
211	T-401	TELECOMMUNICATIONS - ENLARGED PLAN - DATA CENTER 240	05/15/2024	
212	T-402	TELECOMMUNICATIONS - ELEVATION - DATA CENTER 240	05/15/2024	
213	T-403	TELECOMMUNICATIONS - ISOMETRIC - DATA CENTER 240	05/15/2024	
214	T-501	TELECOMMUNICATIONS - EQUIPMENT SCHEDULES	05/15/2024	
215	T-601	TELECOMMUNICATIONS - DETAILS	05/15/2024	
216	T-602	TELECOMMUNICATIONS - DETAILS	05/15/2024	
217	TA-000	AUDIO/VIDEO - LEGEND AND NOTES	05/15/2024	
218	TA-101	AUDIO/VIDEO - FLOOR PLAN - LEVEL 1	05/15/2024	
219	TA-102	AUDIO/VIDEO - FLOOR PLAN - LEVEL 2	05/15/2024	
220	TA-103	AUDIO/VIDEO - FLOOR PLAN - LEVEL 3	05/15/2024	
221	TA-501	AUDIO VIDEO - DEVICE SCHEDULES	05/15/2024	
222	TA-601	AUDIO/VIDEO - DETAILS	05/15/2024	
223	TA-602	AUDIO/VIDEO - DETAILS	05/15/2024	
224	TY-000	SECURITY - LEGEND AND NOTES	05/15/2024	
225	TY-100	SECURITY - SITE PLAN	05/15/2024	
226	TY-101	SECURITY - FLOOR PLAN - LEVEL 1	05/15/2024	
227	TY-102	SECURITY - FLOOR PLAN - LEVEL 2	05/15/2024	
228	TY-103	SECURITY - FLOOR PLAN - LEVEL 3	05/15/2024	
229	TY-401	SECURITY - ENLARGED PLAN - DATA CENTER 240	05/15/2024	
230	TY-402	SECURITY - SECURITY CONTROL DIAGRAM	05/15/2024	
231	TY-501	SECURITY - EQUIPMENT SCHEDULES	05/15/2024	
232	TY-601	SECURITY - DETAILS	05/15/2024	
233	TY-602	SECURITY - DETAILS	05/15/2024	

FSGROUP ARCHITECTS
16575 Village Drive
Houston Texas 77040
713 344 1752 PH
fsdesignbuild.com

PROJECT NAME

THE STATE OF TEXAS
FORT BEND COUNTY

INFORMATION TECHNOLGY BUILDING
1419 EUGENE HEIMANN CIRCLE
FORT BEND COUNTY . RICHMOND . TEXAS 77469

CONSULTANTS

PROFESSIONAL SEAL

REGISTERED ARCHITECT
FAKHRUDDIN N SABIR
26311
STATE OF TEXAS
5/15/2024

ISSUED FOR
ISSUED FOR PROPOSALS AND PERMIT

REVISIONS

No.	DESCRIPTION	DATE

KEY PLAN

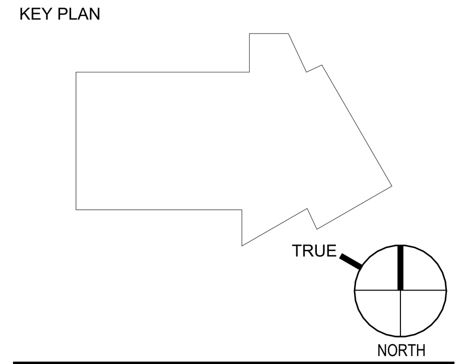

SHEET TITLE
SHEET INDEX

SCALE 12" = 1'-0"
DATE 05/15/2024
PROJECT NUMBER 2319
SHEET NUMBER
G001

FILE PATH: Autodesk Docs://FBC IT Building/FBIT_A23.rvt
PLOT DATE: 5/22/2024 5:23:30 PM

COMcheck Software Version COMcheckWeb
Envelope Compliance Certificate

Project Information

Energy Code:	2015 IECC
Project Title:	FBC IT Building
Location:	Richmond, Texas
Climate Zone:	2a
Project Type:	New Construction
Vertical Glazing / Wall Area:	36%

Construction Site:
1419 Eugene Heimann Circle
Richmond 77469

Owner/Agent:
Fort Bend County Texas
301 Jackson Street, Suite 301
Richmond, Texas 77469

Designer/Contractor:
Harry Knapp
FSG Architects
16575 Village Dr.
Houston 77040
7133441752
harry@fsdesignbuild.com

REGISTERED ARCHITECT HARRY J. KNAPP 19445 STATE OF TEXAS
HARRY KNAPP
5/20/24

Additional Efficiency Package(s)

Credits: 1.0 Required 1.0 Proposed
Enhanced Interior Lighting Controls, 1.0 credit

Building Area	Floor Area
1-Office : Nonresidential	42173

Envelope Assemblies

Assembly	Gross Area or Perimeter	Cavity R-Value	Cont. R-Value	Proposed U-Factor	Budget U-Factor(a)
Roof 1: Insulation Entirely Above Deck: High Albedo Roof Required, 3-Year-Aged Solar Reflectance = 0.55, Thermal Emittance = 0.75 (c), [Bldg. Use 1 - Office]	13384	---	34.8	0.028	0.039
Roof 2: Insulation Entirely Above Deck: High Albedo Roof Required, 3-Year-Aged Solar Reflectance = 0.55, Thermal Emittance = 0.75 (c), [Bldg. Use 1 - Office]	792	---	34.8	0.028	0.039
Roof 3: Insulation Entirely Above Deck: High Albedo Roof Required, 3-Year-Aged Solar Reflectance = 0.55, Thermal Emittance = 0.75 (c), [Bldg. Use 1 - Office]	1732	---	34.8	0.028	0.039
NORTH					
Exterior Wall 3: Steel-Framed, 16" o.c., [Bldg. Use 1 - Office]	6142	21.0	0.0	0.106	0.077
Window 3: Metal Frame with Thermal Break:Fixed, Perf. Specs.: Product ID OBE StormMax with Solarban 70XL Argon, SHGC 0.25, [Bldg. Use 1 - Office] (b)	1389	---	---	0.360	0.500
Door 1: Glass (> 50% glazing):Metal Frame, Entrance Door, Perf. Specs.: Product ID OBE StormMax with Solarban 70XL Argon, SHGC 0.25, [Bldg. Use 1 - Office] (b)	48	---	---	0.360	0.830
EAST					
Exterior Wall 4: Steel-Framed, 16" o.c., [Bldg. Use 1 - Office]	3740	21.0	0.0	0.106	0.077
Window 4: Metal Frame with Thermal Break:Fixed, Perf. Specs.: Product ID OBE StormMax with Solarban 70XL Argon, SHGC 0.25, [Bldg. Use 1 - Office] (b)	1161	---	---	0.360	0.500
Door 2: Glass (> 50% glazing):Metal Frame, Entrance Door, Perf. Specs.: Product ID OBE StormMax with Solarban 70XL Argon, SHGC 0.25, [Bldg. Use 1 - Office] (b)	48	---	---	0.360	0.830

Assembly	Gross Area or Perimeter	Cavity R-Value	Cont. R-Value	Proposed U-Factor	Budget U-Factor(a)
SOUTH					
Exterior Wall 1: Steel-Framed, 16" o.c., [Bldg. Use 1 - Office]	8088	21.0	0.0	0.106	0.077
Window 1: Metal Frame with Thermal Break:Fixed, Perf. Specs.: Product ID OBE StormMax with Solarban 70XL Argon, SHGC 0.25, PF 0.18, [Bldg. Use 1 - Office] (b)	1553	---	---	0.360	0.500
Window 5: Metal Frame with Thermal Break:Fixed, Perf. Specs.: Product ID OBE StormMax with Solarban 70XL Argon, SHGC 0.25, PF 0.28, [Bldg. Use 1 - Office] (b)	1782	---	---	0.360	0.500
Door 3: Glass (> 50% glazing):Metal Frame, Entrance Door, Perf. Specs.: Product ID OBE StormMax with Solarban 70XL Argon, SHGC 0.25, [Bldg. Use 1 - Office] (b)	48	---	---	0.360	0.830
WEST					
Exterior Wall 2: Steel-Framed, 16" o.c., [Bldg. Use 1 - Office]	3547	21.0	0.0	0.106	0.077
Window 2: Metal Frame with Thermal Break:Fixed, Perf. Specs.: Product ID OBE StormMax with Solarban 70XL Argon, SHGC 0.25, [Bldg. Use 1 - Office] (b)	1615	---	---	0.360	0.500

(a) Budget U-factors are used for software baseline calculations ONLY, and are not code requirements.
(b) Fenestration product performance must be certified in accordance with NFRC and requires supporting documentation.
(c) High albedo roof requirement options: 1) 3-year aged solar reflectance >= 0.55 thermal emittance >= 0.75, 2) 3-year aged solar reflectance index >= 64.0, 3) Initial year aged solar reflectance >= 0.70 thermal emittance >= 0.75, 4) Initial year aged solar reflectance index >= 82.0.

Envelope PASSES: Design 7% better than code

Envelope Compliance Statement

Compliance Statement: The proposed envelope design represented in this document is consistent with the building plans, specifications, and other calculations submitted with this permit application. The proposed envelope systems have been designed to meet the 2015 IECC requirements in COM*check* Version COMcheckWeb and to comply with any applicable mandatory requirements listed in the Inspection Checklist.

HARRY KNAPP ARCHITECT — Name - Title
HARRY KNAPP — Signature
5/20/24 — Date

REGISTERED ARCHITECT HARRY J. KNAPP 19445 STATE OF TEXAS
HARRY KNAPP
5/20/24

OVERALL CODE REVIEW

PROJECT INFORMATION

PROJECT:	FORT BEND COUNTY INFORMATION TECHNOLOGY BUILDING
LOCATION:	1419 EUGENE HEIMANN CIRCLE, RICHMOND, TX 77469
PROJECT DESCRIPTION:	NEW OFFICE BUILDING
BUILDING HEIGHT:	48' THREE STORY FACILITY
TDLR TABS REGISTRATION No:	TABS 2024018872
AUTOMATIC SPRINKLER SYSTEM:	YES
TYPE OF CONSTRUCTION:	TYPE II-B
OCCUPANCY:	B
ZONING DISTRICT	PI - PUBLIC INFRASTRUCTURE

BUILDING AREA SUMMARY:	AREA
LEVEL 1	15,948 SF
LEVEL 2	13,137 SF
LEVEL 3	13,088 SF
TOTAL	42,173 SF

ADOPTED BUILDING CODES: CITY OF RICHMOND, TEXAS
richmondtx.gov/departments/building-department

2015 INTERNATIONAL BUILDING CODE
2015 INTERNATIONAL PLUMBING CODE
2015 INTERNATIONAL MECHANICAL CODE
2017 NATIONAL ELECTRIC CODE NFPA70
2015 INTERNATIONAL ENERGY CONSERVATION CODE
2015 INTERNATIONAL FUEL GAS CODE
2021 INTERNATIONAL FIRE CODE with FBC Amendments
2012 TEXAS ACCESSIBILITY STANDARDS
ICC A117.1

CITY OF RICHMOND UNIFIED DEVELOPMENT CODE

GENERAL BUILDING HEIGHTS AND AREAS

BUILDING HEIGHT — 2015 IBC Table 504.3

	HEIGHT
ALLOWABLE	75'
ACTUAL	48'

NUMBER OF STORIES — 2015 IBC Table 504.4

	STORIES
ALLOWABLE	3
ACTUAL	3

BUILDING AREA — 2015 IBC 507.4

	AREA
ALLOWABLE	UNLIMITED
ACTUAL	42,173 SF

UNLIMITED AREA CLASSIFICATION - 60' CLEAR ALL AROUND & SPRINKLERED.

FIRE RESISTANCE RATING REQUIREMENTS FOR BUILDING ELEMENTS — 2015 IBC Table 601

CONSTRUCTION TYPE "II-B":	REQUIRED	PROVIDED
PRIMARY STRUCTURAL FRAME	0 HR	0 HR
BEARING WALLS (EXTERIOR)	0 HR	0 HR
BEARING WALLS (INTERIOR)	0 HR	0 HR
NON BEARING WALLS (EXTERIOR)	0 HR	0 HR
NON BEARING WALLS (INTERIOR)	0 HR	0 HR
FLOOR CONSTRUCTION	0 HR	** 0 HR
ROOF CONSTRUCTION	0 HR	0 HR

** ADDITIONAL PROTECTION PROVIDED — 2015 IBC 713.4

AT INCIDENTAL USE SPACES:	REQUIRED	PROVIDED
ATRIUM WALLS AND LOBBY AREA	1 HR	1 HR
ELEVATOR SHAFT	1 HR	1 HR
STAIRWAYS	1 HR	1 HR
DATA CENTER	1 HR	1 HR
DIAGNOSTIC	1 HR	1 HR
FIRE RISER ROOM	0 HR	1 HR

FIRE-RESISTANCE RATING REQUIREMENTS FOR EXTERIOR WALLS BASED ON FIRE SEPARATION DISTANCE — 2015 IBC Table 602

CONSTRUCTION TYPE "II-B":	DISTANCE	REQUIRED	PROVIDED
NORTH WALL	> 60'	0 HR	0 HR
SOUTH WALL	> 60'	0 HR	0 HR
EAST WALL	> 60'	0 HR	0 HR
WEST WALL	> 60'	0 HR	0 HR

GREATER THAN 60' TO PROJECT BOUNDARY LINES IN ALL DIRECTIONS

FIRE RESISTANCE RATING REQUIREMENTS FOR BUILDING ELEMENTS

2015 INTERNATIONAL BUILDING CODE
2015 INTERNATIONAL PLUMBING CODE
2015 INTERNATIONAL MECHANICAL CODE
2017 NATIONAL ELECTRIC CODE NFPA70
2015 INTERNATIONAL ENERGY CONSERVATION CODE
2015 INTERNATIONAL FUEL GAS CODE
2021 INTERNATIONAL FIRE CODE with FBC Amendments
2012 TEXAS ACCESSIBILITY STANDARDS
ICC A117.1

CITY OF RICHMOND UNIFIED DEVELOPMENT CODE

OCCUPANT LOAD CALCULATIONS — 2015 IBC 304, 306, 311; 2015 IBC Table 1004.1.2

OCCUPANT LOAD

OCCUPANCY CLASSIFICATION	LOAD FACTOR	LEVEL 1	LEVEL 2	LEVEL 3	OCCUPANTS
BUSINESS AREAS	100 GROSS	11,455 SF 115 OCCS	13,137 SF 132 OCCS	13,088 SF 131 OCCS	376
ASSEMBLY WITHOUT FIXED SEATS - STANDING SPACE (ATRIUM LOBBY)	5 NET	664 SF 133 OCCS			169
ASSEMBLY WITHOUT FIXED SEATS - TABLES & CHAIRS (TRAINING ROOM)	15 NET	3,829 SF 256 OCCS			256
	TOTALS	15,948 SF 504 OCCS	13,137 SF 132 OCCS	13,088 SF 131 OCCS	42,173 SF 767 OCCS

MEANS OF EGRESS SIZING — 2015 IBC 1005.3.1; 2015 IBC 1011.2.1

STAIRWAY WIDTHS

	REQUIRED WIDTH	ACTUAL WIDTH
STAIR #1 - ATRIUM LOBBY	Maximum 152 OCCS at Level 1 152 x .2" = 31" (MIN. WIDTH 44")	70"
STAIR #2 - WEST OFFICES	Maximum 71 OCCS at Level 1 71 x .2" = 15" (MIN. WIDTH 44")	48"
STAIR #3 - LOADING DOCK	Maximum 40 OCCS at Level 1 40 x .2" = 8" (MIN. WIDTH 36")	42"

NUMBER OF EXITS — 767 OCCS — 2015 IBC 1006.2.1.1

MINIMUM # REQUIRED	3
ACTUAL # EXIT DOORS	6

EXIT WIDTH — 2015 IBC 1005.3.2.1

	MIN. REQUIRED WIDTH	ACTUAL WIDTH
OVERALL COMBINED EXIT WIDTH	767 OCCS x .15" = 116"	(4 DOORS x 34") + (2 DOORS x 68") = 272"
WIDTH OF EXIT CORRIDOR 101	246 OCCS x .15" = 37"	MIN. 66" (VARIES)

COMMON PATH OF EGRESS TRAVEL — 2015 IBC Table 1006.3.2(2)

OCCUPANCY CLASSIFICATION	ALLOWABLE	MAX. ACTUAL
LEVEL 1	100'	38' AT BREAK RM.
LEVEL 2	75'	45' AT CYBER/NSOC
LEVEL 3	75'	35' AT TESTING HUDDLE

EXIT ACCESS TRAVEL DISTANCE — 2015 IBC Table 1017.2; 2015 IBC 1017.2.2; 2015 IBC 404.9.3

OCCUPANCY CLASSIFICATION	ALLOWABLE	MAX. ACTUAL
B / OFFICE	300'	103' FROM BREAK RM. 127 TO EXIT NEXT TO STAIR #2
THROUGH ATRIUM	200'	177' FROM LEVEL 3 BULLPEN DOOR, DOWN ATRIUM STAIRS, THROUGH FRONT EXIT DOOR

ATRIUM PROTECTION — 2015 IBC 404.5

SMOKE CONTROL NOT REQUIRED FOR ATRIUM THAT CONNECTS ONLY TWO STORIES.
ATRIUM SHALL HAVE 1-HOUR FIRE RATED CONSTRUCTION AT ALL INTERIOR WALLS AND DOORS.

PLUMBING FIXTURES — 2015 IBC Table 2902.1

MINIMUM NUMBER OF REQUIRED PLUMBING FIXTURES

TOTAL OCCUPANT LOAD = 767
384 MEN
384 WOMEN

FIXTURES	TOILETS MEN (0-50 OCCS = 1:25, 50+ OCCS = 1:50) URINALS	TOILETS MEN	TOILETS WOMEN	LAVATORIES MEN (0-80 OCCS = 1:40, 80+ OCCS = 1:80)	LAVATORIES WOMEN	DRINKING FOUNTAINS 1:100	SERVICE SINK
FIXTURES REQUIRED	0	9	9	6	6	8	1
FIXTURES PROVIDED	6	6	9	6	6	9	0

INCLUDING 3 WATER FOUNTAINS AT BREAK ROOM SINKS

FSGROUP TEAM+BUILD
16575 Village Drive
Jersey Village Texas 77040
713 344 1752 Office
www.fsdesignbuild.com

PROJECT NAME

THE STATE OF TEXAS FORT BEND COUNTY

INFORMATION TECHNOLGY BUILDING
EUGENE HEIMANN CIRCLE
FORT BEND COUNTY . TEXAS

CONSULTANTS

PROFESSIONAL SEAL

REGISTERED ARCHITECT FAKHRUDDIN N. SABIR 22631 STATE OF TEXAS
Sabir 5/15/2024

ISSUED FOR
ISSUED FOR PROPOSALS AND PERMIT

REVISIONS

No.	DESCRIPTION	DATE

KEY PLAN

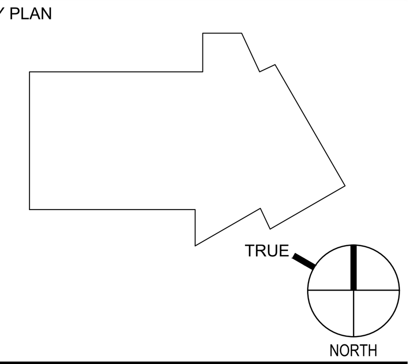

SHEET TITLE
CODE ANALYSIS

SCALE
As Indicated

DATE
05/15/2024

PROJECT NUMBER
2319

SHEET NUMBER
G002

GENERAL NOTES

A. PROVIDE BUILDING INFORMATION SIGN IN LOBBY PER FIRE CODE.

B. PROVIDE FIRE EXTINGUISHERS IN CABINETS AS DIRECTED AND QUANTIFIED BY FIRE MARSHAL. FECs AS DEPICTED ARE A MINIMUM REQUIREMENT WITH MAX. TRAVEL DISTANCE 75' TO FEC.

C. PROVIDE AED IN CABINET AS LOCATED.

D. PROVIDE KNOX BOX LOCATIONS AND FDC SIGNAGE PER FIRE MARSHAL.

LEGEND

BUSINESS 4,005 SF 40 OCCS	OCCUPANCY ZONE IDENTIFIER
	1-HOUR FIRE RATED CONSTRUCTION SEPARATION
	OCCUPANCY BOUNDARY AT ATRIUM LOBBY
	TRAVEL DISTANCE TO EXIT
	NUMBER OF OCCUPANTS AND EXIT PATHWAY
E1.6	EXTERIOR EXIT DOOR
FEC	PORTABLE FIRE EXTINGUISHER IN CABINET
FE**	PORTABLE FIRE EXTINGUISHER PER SPECIFIC ROOM AND EQUIPMENT REQUIREMENTS
AED	AUTOMATED EXTERNAL DEFIBRILATOR IN CABINET
KNOX	KNOX BOX FIRE DEPT. ACCESS

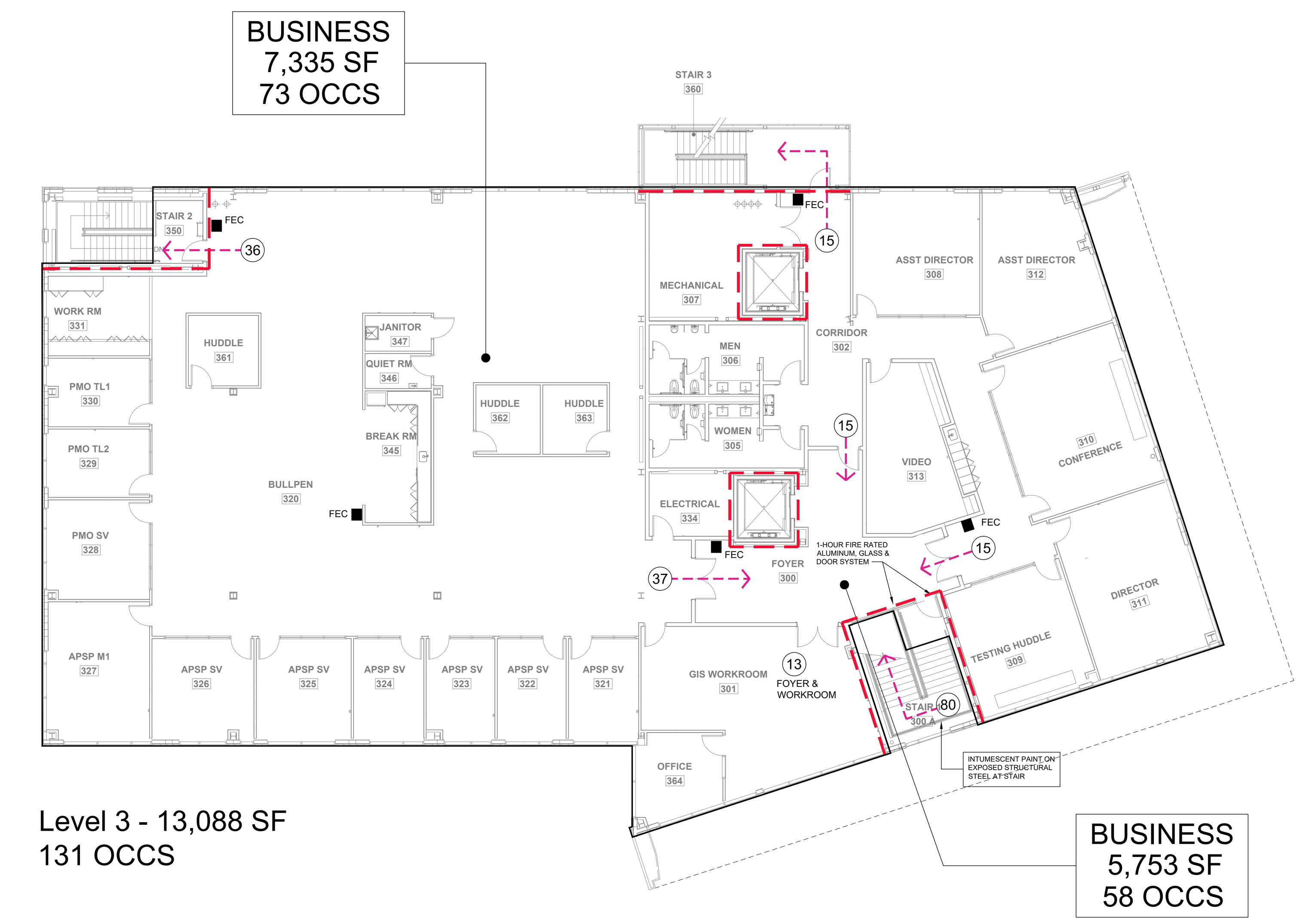

Level 3 - 13,088 SF
131 OCCS

3 G003 LIFE SAFETY PLAN - LEVEL 3
SCALE : N.T.S.

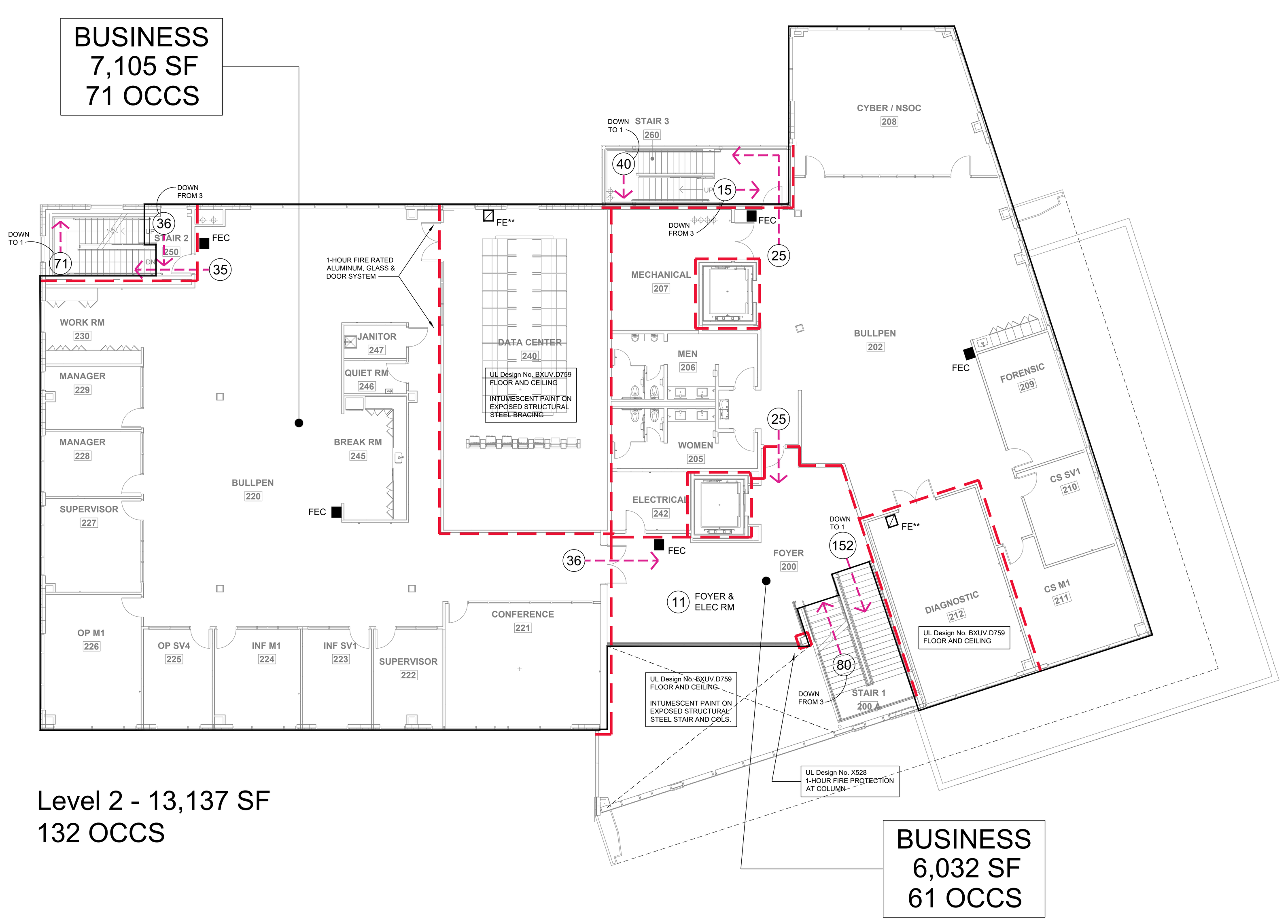

Level 2 - 13,137 SF
132 OCCS

2 G003 LIFE SAFETY PLAN - LEVEL 2
SCALE : N.T.S.

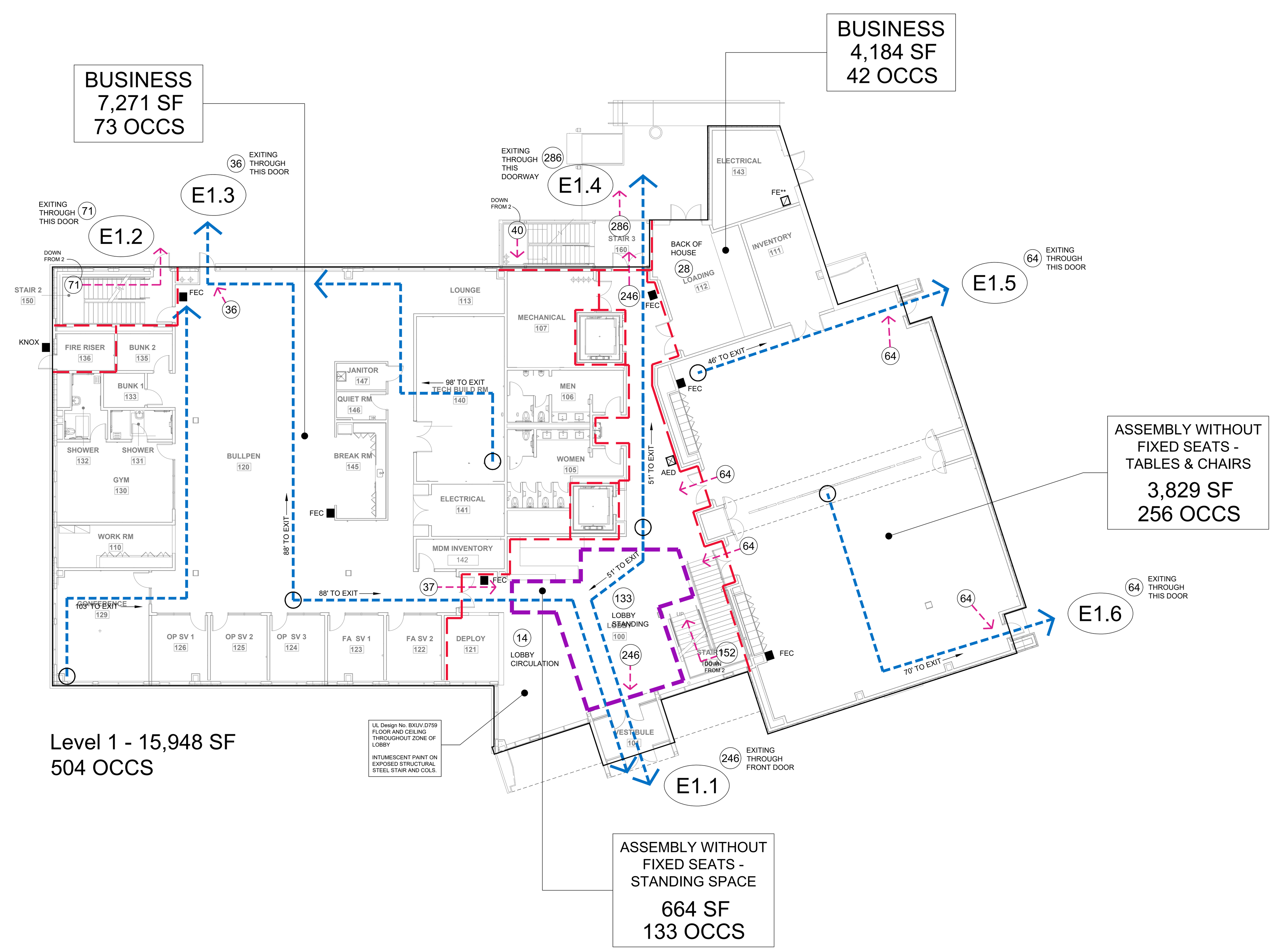

Level 1 - 15,948 SF
504 OCCS

1 G003 LIFE SAFETY PLAN - LEVEL 1
SCALE : N.T.S.

FSGROUP
TEAM+BUILD
16575 Village Drive
Jersey Village Texas 77040
713 344 1752 Office
www.fsdesignbuild.com

PROJECT NAME

THE STATE OF TEXAS · FORT BEND COUNTY

INFORMATION TECHNOLOGY BUILDING
EUGENE HEIMANN CIRCLE
FORT BEND COUNTY . TEXAS

CONSULTANTS

PROFESSIONAL SEAL

REGISTERED ARCHITECT FAKHRUDDIN K. SABIR 22631 STATE OF TEXAS
5/15/2024

ISSUED FOR
ISSUED FOR PROPOSALS AND PERMIT

REVISIONS

No.	DESCRIPTION	DATE

KEY PLAN

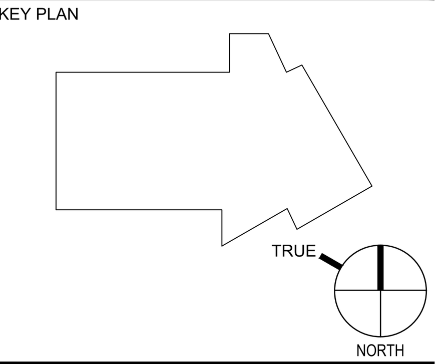

SHEET TITLE
LIFE SAFETY PLAN

SCALE: As Indicated
DATE: 05/15/2024
PROJECT NUMBER: 2319

SHEET NUMBER
G003

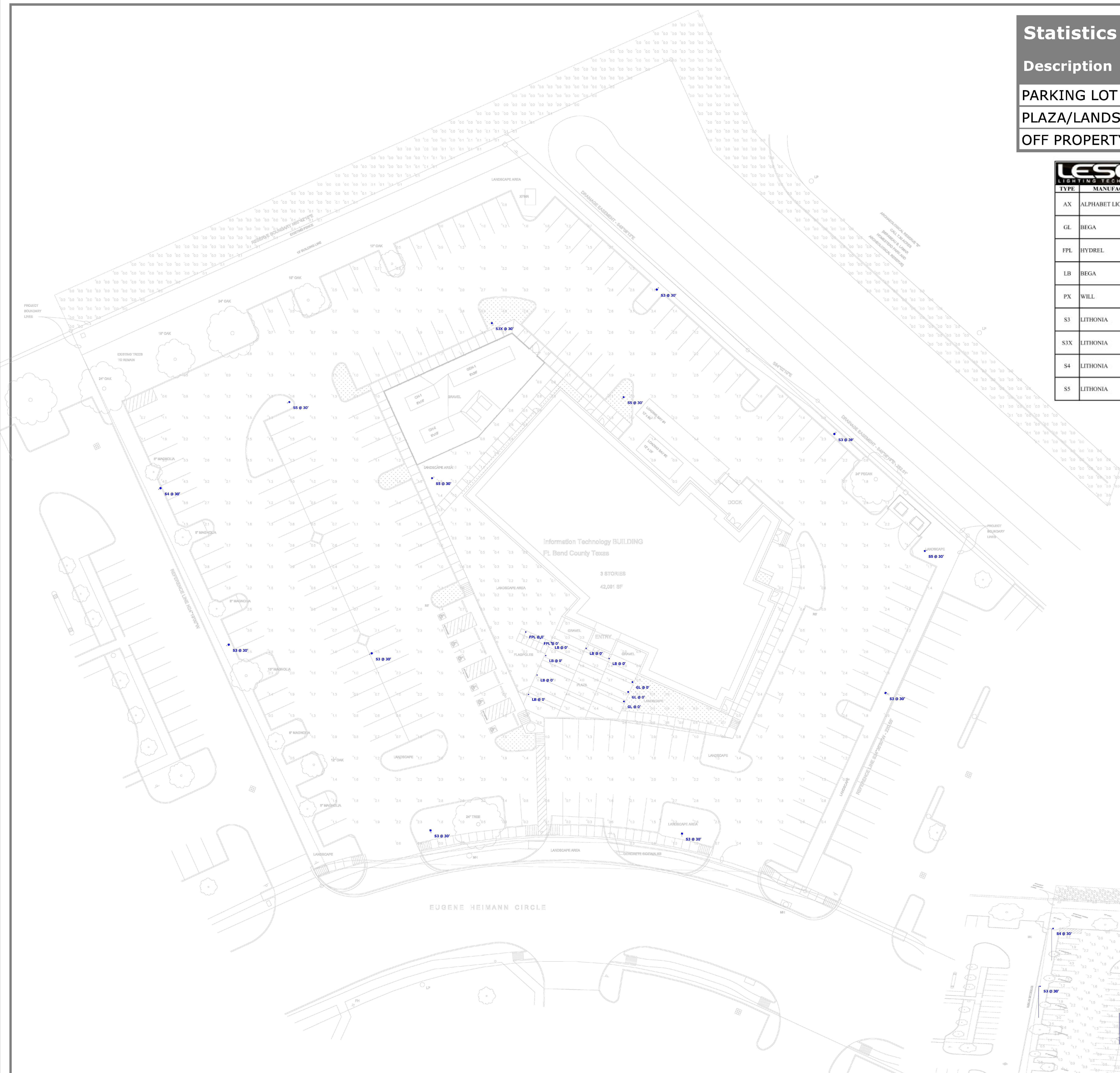

Plan View
Scale - 1" = 20ft

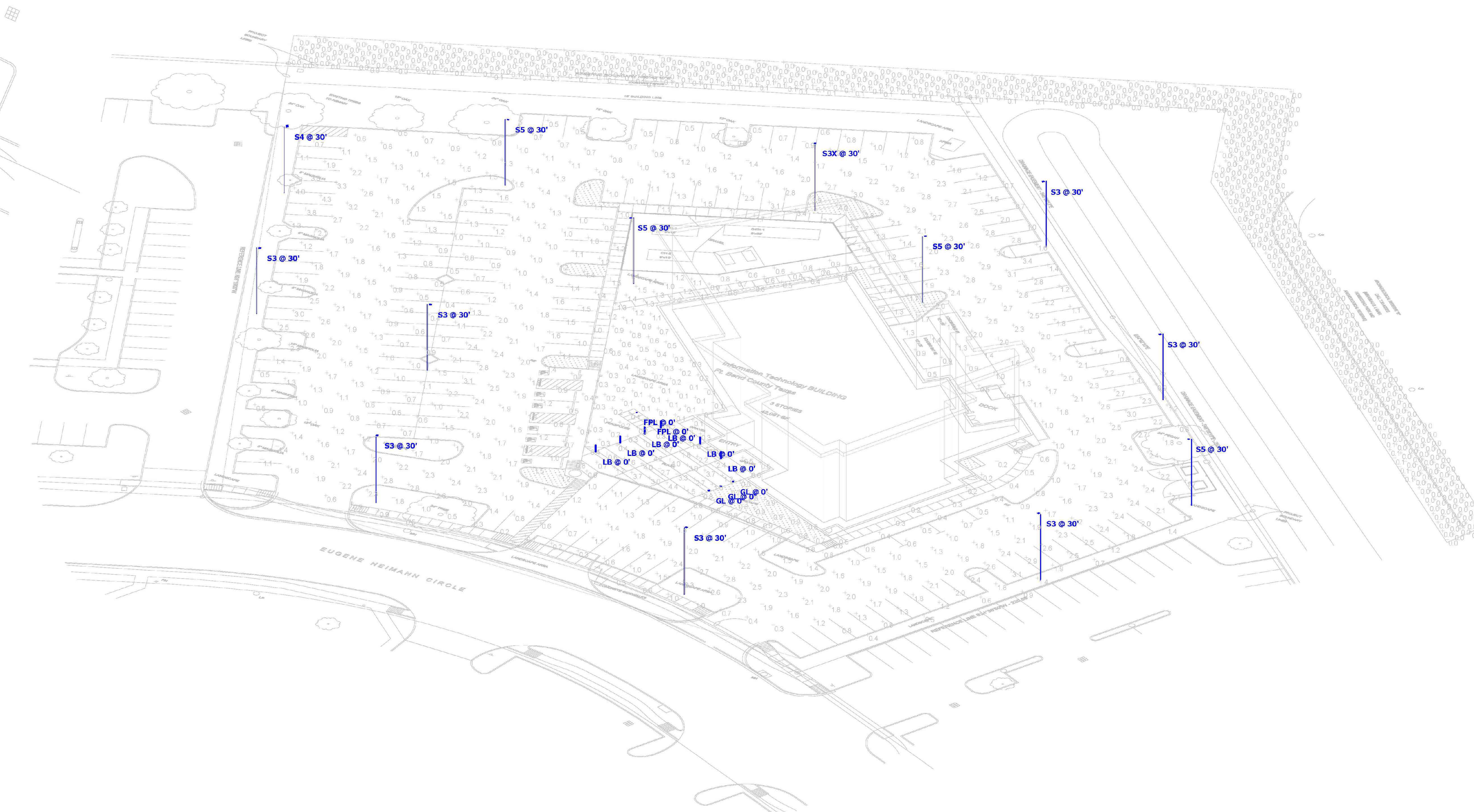

South East View

Statistics

Description	Symbol	Avg	Max	Min	Max/Min	Avg/Min
PARKING LOT	+	1.5 fc	4.3 fc	0.1 fc	43.0:1	15.0:1
PLAZA/LANDSCAPE AREAS	+	0.9 fc	4.4 fc	0.1 fc	44.0:1	9.0:1
OFF PROPERTY	+	0.0 fc	0.1 fc	0.0 fc	N/A	N/A

LESCO LIGHTING TECHNOLOGY

LIGHTING FIXTURE SCHEDULE-FT BEND IT BUILDING

TYPE	MANUFACTURER	CATALOG NUMBER	MOUNTING	CRI / CCT	WATTS	VOLTS	DESCRIPTION	LOCATION
AX	ALPHABET LIGHTING	NU3-RD-SW-15LM-35K-90-55D-HET-WH-WH-NC-UNV-DIM10-EM7	RECESSED	80CRI /35K	13W	UNV	3" RECESSED ROUND DOWNLIGHT - EXTERIOR W/EGRESS BATTERY BACKUP	EXTERIOR
GL	BEGA	B77090 K35	INGRADE	80CRI/35K	16W	UNV	INGRADE PATH GRAZER	EXTERIOR
FPL	HYDREL	MC9740C S LED P3 40K MVOLT NFL FLC20SR	INGRADE	80CRI/40K	46W	MVOLT	FLUSH INGRADE FLAGPOLE UPLIGHTS	EXTERIOR
LB	BEGA	B84063 K4 xx	BOLLARD	80CRI/40K	30W	UNV	3' BOLLARD	EXTERIOR
PX	WILL	VS-RSSA-30-5050-11-AB-FP	ANCHOR BASE	NA	NA	NA	POLES FOR SITE FIXTURES	SITE
S3	LITHONIA	RSX2 LED P3 40K R3 HS	POLE	40K	147W	MVOLT	TYPE III PARKING LOT AREA POLE LIGHT W/HS	SITE
S3X	LITHONIA	RSX2 LED P3 40K R3	POLE	40K	150W	MVOLT	TYPE III PARKING LOT AREA POLE LIGHT - NO HS	SITE
S4	LITHONIA	RSX2 LED P3 40K R4S EGFV	POLE	40K	150W	MVOLT	TYPE IV PARKING LOT AREA POLE LIGHT - FULL VISOR	SITE
S5	LITHONIA	RSX2 LED P3 40K R5 EGFV	POLE	40K	150W	MVOLT	TYPE V PARKING LOT AREA POLE LIGHT - FULL VISOR	SITE

LESCO ARCHITECTURAL LIGHTING

FS GROUP - FORT BEND IT BLDG - SITE PHOTOMETRICS

Designer
LESCO Technical Services
Date
2024
Scale
Not to Scale
Drawing No.

Summary

1 of 1

1 G004 PHOTOMETRIC SITE PLAN
SCALE : 1" = 20'-0"

FSGROUP TEAM+BUILD
16575 Village Drive
Jersey Village Texas 77040
713 344 1752 Office
www.fsdesignbuild.com

PROJECT NAME

INFORMATION TECHNOLOGY BUILDING
EUGENE HEIMANN CIRCLE
FORT BEND COUNTY . TEXAS

CONSULTANTS

PROFESSIONAL SEAL

REGISTERED ARCHITECT FAKHRUDDIN N. SABIR 22631 STATE OF TEXAS
5/15/2024

ISSUED FOR
ISSUED FOR PROPOSALS AND PERMIT

REVISIONS

No.	DESCRIPTION	DATE

KEY PLAN

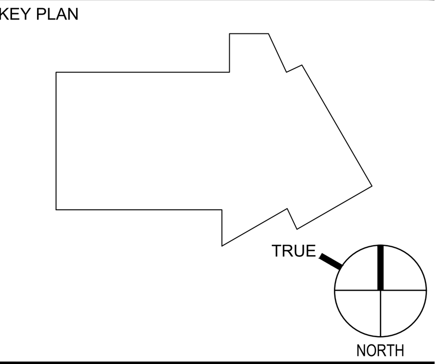

SHEET TITLE
SITE PHOTOMETRICS

SCALE: As Indicated
DATE: 05/15/2024
PROJECT NUMBER: 2319
SHEET NUMBER
G004

1
D100
SITE DEMOLITION PLAN
SCALE : 1" = 20'-0"

FSGROUP
TEAM+BUILD
16575 Village Drive
Jersey Village Texas 77040
713 344 1752 Office
www.fsdesignbuild.com

PROJECT NAME

THE STATE OF TEXAS · FORT BEND COUNTY

INFORMATION TECHNOLGY BUILDING
EUGENE HEIMANN CIRCLE
FORT BEND COUNTY , TEXAS

CONSULTANTS

PROFESSIONAL SEAL

REGISTERED ARCHITECT
FAKHRUDDIN N. SABIR
22631
STATE OF TEXAS
5/15/2024

ISSUED FOR
ISSUED FOR PROPOSALS AND PERMIT

REVISIONS

No.	DESCRIPTION	DATE

KEY PLAN

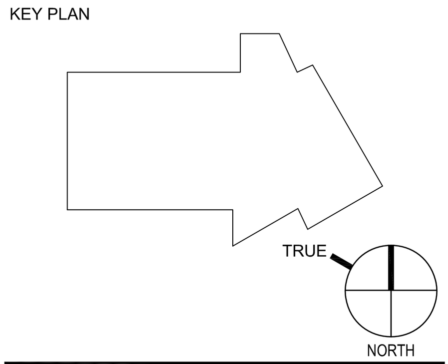

SHEET TITLE
SITE DEMOLITION PLAN

SCALE
As Indicated

DATE
05/15/2024

PROJECT NUMBER
2319

SHEET NUMBER
D100

GENERAL NOTES

G-1. THE CONTRACTOR SHALL NOTIFY CITY OF RICHMOND (REFERRED TO AS THE "CITY") DIRECTOR OF PUBLIC WORKS AT LEAST 48 HOURS PRIOR TO COMMENCEMENT OF WORK AT (281) 342-0559. CONTRACTOR SHALL ATTEND A PRECONSTRUCTION MEETING WITH CITY AND THE PROJECT ENGINEER PRIOR TO INITIATING CONSTRUCTION. PRECONSTRUCTION MEETINGS SHALL BE HELD AT 600 MORTON STREET OR AT A LOCATION APPROVED BY THE DIRECTOR OF PUBLIC WORKS.

G-2. ALL PUBLIC INFRASTRUCTURE SHALL BE INSPECTED BY PUBLIC WORKS INSPECTOR(S) OR AUTHORIZED AGENTS(S). A FOLLOW-UP INSPECTION OF ALL PUBLIC INFRASTRUCTURE SHALL BE SCHEDULED WITHIN 60 DAYS OF THE INITIAL INSPECTION. A COMPLETE RE-INSPECTION WITH A NEW PUNCH LIST MAY BE REQUIRED AFTER THE 60 DAY PERIOD. THE CITY CONSTRUCTION INSPECTOR TO BE NOTIFIED A MINIMUM OF 24 HOURS, ON ALL PAVEMENT POURS, WATER, STORM AND SANITARY TESTING. TESTING WILL NOT BE DONE ON A SATURDAY, UNLESS PRIOR APPROVAL IS PROVIDED. COMPLETED WORK SHALL NOT BE BACKFILLED WITHOUT APPROVAL OF THE CITY.

G-3. CONTRACTOR MUST OBTAIN ALL PERMITS AND SUPPLY ALL BONDS REQUIRED BY THE CITY, PRIOR TO BEGINNING CONSTRUCTION. ALL REQUIRED PERMITS MUST BE LISTED ON SITE, PLACED IN A WATERPROOF ENCASEMENT.

~~G-4. UPON COMPLETION OF THE PROJECT, THE CONTRACTOR AND/OR PROJECT ENGINEER SHALL PROVIDE THE DIRECTOR OF PUBLIC WORKS AND CITY ENGINEER DETAILED, RECORD DRAWINGS IN REPRODUCTIVE AND ELECTRONIC FORMAT.~~

G-5. THE CONTRACTOR SHALL FURNISH ALL MATERIALS, EQUIPMENT AND LABOR FOR EXCAVATION, INSTALLATION AND BACKFILLING OF WATER, SANITARY AND STORM SEWER LINES AND RELATED APPURTENANCES AS SHOWN ON THE PLANS AND/OR DESCRIBED IN THE SPECIFICATIONS.

G-6. ALL MATERIALS AND WORKMANSHIP SHALL CONFORM TO THE TEXAS DEPARTMENT OF TRANSPORTATION STANDARD SPECIFICATIONS (2004) AND REVISIONS THERETO.

(LATEST EDITION) AND REVISONS THERETO.

G-7. ALL WORK PERFORMED SHALL COMPLY WITH CURRENT NATIONAL SPECIFICATIONS AND STANDARD PRACTICES, APPROVED PROJECT PLANS AND SPECIFICATIONS AND ALL APPLICABLE CITY STANDARDS, CODES AND ORDINANCES.

G-8. ALL CONSTRUCTION TRAFFIC CONTROL IN THE PROJECT AREA SHALL MEET THE REQUIREMENTS OF THE TEXAS MANUAL OF UNIFORM TRAFFIC CONTROL DEVICES AND SHALL BE APPROVED BY THE CITY FOR ALL PROJECTS WITHIN THE CITY LIMITS.

G-9. CONTRACTOR SHALL NOTIFY ALL UTILITY COMPANIES IN THE AREA PRIOR TO COMMENCING WORK IN ANY RIGHT-OF-WAY OR EXISTING EASEMENT. A VERIFICATION NUMBER FROM THE ONE-CALL UTILITY COORDINATING COMMITTEE IS REQUIRED.

G-10. THE CONTRACTOR SHALL BE RESPONSIBLE FOR VERIFYING THE LOCATIONS OF ALL EXISTING UTILITIES PRIOR TO EXCAVATION AND UNCOVER EXISTING UTILITIES AT ALL "POINTS OF CROSSING" TO DETERMINE IF CONFLICTS EXIST PRIOR TO COMMENCING ANY CONSTRUCTION. NOTIFY THE PROJECT ENGINEER, CITY ENGINEER AND DIRECTOR OF PUBLIC WORKS IMMEDIATELY OF ANY CONFLICT.

G-11. IT SHALL BE THE CONTRACTOR'S RESPONSIBILITY TO LOCATE SUCH UNDERGROUND FEATURES SUFFICIENTLY IN ADVANCE OF OPERATIONS TO PRECLUDE DAMAGE IN THE EVENT THAT UNDERGROUND FACILITIES NOT SHOWN ON THE DRAWINGS ARE ENCOUNTERED.

G-12. IN THE EVENT OF DAMAGE TO UNDERGROUND FACILITIES, WHETHER OR NOT IT IS SHOWN ON THE DRAWINGS, THE CONTRACTOR SHALL MAKE THE NECESSARY REPAIRS TO REPLACE THE FACILITY BACK IN SERVICE. ALL SUCH REPAIRS SHALL CONFORM TO THE REQUIREMENTS OF THE OWNER OF THE FACILITY.

G-13. THE CONTRACTOR SHALL PROVIDE SHEETING, SHORING AND BRACING NECESSARY TO PROTECT WORKMEN AND EXISTING UTILITIES DURING ALL PHASES OF CONSTRUCTION AS MAY BE REQUIRED BY O.S.H.A, FEDERAL, STATE AND LOCAL LAWS, CODES AND ORDINANCES.

G-14. CONTRACTOR SHALL COVER OPEN EXCAVATIONS WITH ANCHORED STEEL PLATES DURING NON-WORKING HOURS ALONG EXISTING ROADWAYS AND WITHIN TRAFFIC AREAS.

G-15. ALL TESTING FOR THIS PROJECT SHALL CONFORM TO THE CITY REQUIREMENTS. SHOULD ANY TEST RESULTS NOT MEET THE TESTING REQUIREMENTS, IT SHALL BE THE CONTRACTOR'S RESPONSIBILITY TO REMOVE OR REPLACE SUCH MATERIALS AND INSTALLATIONS, SO THAT THE TESTING REQUIREMENTS ARE MET.

G-16. THE LOADING, UNLOADING AND HANDLING OF ALL PIPE, VALVES, HYDRANTS, FITTINGS, MANHOLES AND OTHER MATERIALS SHALL BE IN ACCORDANCE WITH THE MANUFACTURER'S RECOMMENDED PRACTICES AND SHALL BE PERFORMED WITH CARE TO AVOID ANY DAMAGE TO THE MATERIALS. THE CONTRACTOR SHALL LOCATE AND PROVIDE THE NECESSARY STORAGE AREAS FOR MATERIALS AND EQUIPMENT.

G-17. THE CONTRACTOR SHALL BE RESPONSIBLE FOR SAFEGUARDING AND PROTECTING ALL MATERIAL AND EQUIPMENT STORED ON THE JOB SITE. THE CONTRACTOR SHALL BE RESPONSIBLE FOR THE STORAGE OF MATERIALS IN A SAFE AND WORKMANLIKE MANNER TO PREVENT INJURIES, DURING AND AFTER WORKING HOURS, UNTIL PROJECT COMPLETION.

G-18. THE CONTRACTOR SHALL NOT UNLOAD ANY TRACK-TYPE CONSTRUCTION MACHINERY ON ANY EXISTING PAVEMENT OR CROSS OVER ANY EXISTING PAVEMENT OR CURB DURING ANY PROJECT.

G-19. IT IS THE CONTRACTOR'S RESPONSIBILITY TO SUPERVISE AND COORDINATE ALL WORK TO INSURE THE PROPER EXECUTION. ALL WORK IS TO BE ACCOMPLISHED IN A NEAT, WORKMANLIKE MANNER, AND ALL EXCESS MATERIALS, TRASH AND DEBRIS, ETC., SHALL BE REMOVED FROM THE JOB BY THE CONTRACTOR, AT HIS EXPENSE.

G-20. CONTRACTOR SHALL REMOVE DIRT AND/OR DEBRIS DEPOSITED ON EXISTING PAVEMENT DUE TO HIS CONSTRUCTION ACTIVITY ON A DAILY BASIS. ALL EQUIPMENT AND CONSTRUCTION DEBRIS SHALL BE REMOVED FROM THE SITE AT THE END OF THE PROJECT.

G-21. EXISTING ROADS, RIGHT-OF-WAYS, EASEMENTS AND PROPERTY DISTURBED DURING CONSTRUCTION SHALL BE RESTORED AS GOOD OR BETTER THAN THE CONDITION PRIOR TO STARTING THE WORK.

G-22. UNLESS OTHERWISE REQUIRED, ALL DISTURBED AREAS SHALL BE SEEDED WITH HYDROMULCH SEEDING AND PROVIDE WATERING UNTIL VEGETATION IS ESTABLISHED.

G-23. ALL EXCESS AND/OR UNSUITABLE SOIL, AND DEBRIS AND/OR WASTE MATERIALS SHALL BE REMOVED FROM THE SITE AND DISPOSED OF PROPERLY.

G-24. ADJUST MANHOLES, INLETS, FLUSHING VALVES AND WATER VALVE BOXES TO MATCH FINAL GRADE IN ACCORDANCE WITH THE REQUIREMENTS OF THE CITY.

G-25. UTILITY SERVICE LINES

1) ALL UTILITY SERVICE LINES ARE NOT SHOWN ON THE DRAWINGS. CONTRACTORS SHALL ANTICIPATE THAT SUCH SERVICE LINES EXIST AND REPAIR THEM IF DAMAGED DURING CONSTRUCTION. IT IS ALSO THE CONTRACTOR'S RESPONSIBILITY TO MAKE ARRANGEMENTS WITH THE OWNERS OF SUCH UTILITIES PRIOR TO WORKING IN THE AREA TO CONFIRM THEIR EXACT LOCATIONS AND/OR DEPTHS, AND TO DETERMINE WHETHER ANY ADDITIONAL UTILITIES OTHER THAN THOSE SHOWN ON THESE PLANS MAY BE PRESENT. THE CONTRACTOR SHALL DETERMINE IF ANY OF THESE UTILITIES ARE CLEAR, AND SHALL PRESERVE AND PROTECT ALL OF THESE UTILITIES SHOWN OR FOUND. IF CONFLICTS ARISE REGARDING PUBLIC UTILITIES, THE CONTRACTOR SHOULD IMMEDIATELY NOTIFY THE PROJECT ENGINEER.

2) UTILITY RELOCATIONS REQUIRED BY CONSTRUCTION SHALL BE PERFORMED BY THE APPROPRIATE UTILITY COMPANY. ANY RELOCATIONS OR TEMPORARY BRACING NOT DEEMED NECESSARY BY THE ENGINEER, BUT DESIRED FOR CONVENIENCE BY THE CONTRACTOR, SHALL BE PERFORMED BY THE APPROPRIATE UTILITY COMPANY AT THE CONTRACTOR'S EXPENSE.

3) TEXAS ONE CALL	1-800-245-4545	6) AT&T	281-341-4312
4) CENTERPOINT ENERGY-GAS	281-342-8881	7) COMCAST	713-462-1900
5) CENTERPOINT ENERGY-ELECTRIC	281-341-4930	8) CITY OF RICHMOND	281-342-0559

G-26. AT&T TELEPHONE

1) THE CONTRACTOR SHALL DETERMINE THE ACTUAL LOCATION OF UTILITIES BY CALLING TEXAS ONE-CALL SYSTEM AT LEAST 72 HOURS BEFORE COMMENCING WORK. CONTRACTOR AGREES TO BE FULLY RESPONSIBLE FOR ANY AND ALL DAMAGES WHICH MIGHT BE OCCASIONED BY THE CONTRACTOR'S FAILURE TO LOCATE AND PRESERVE THE UNDERGROUND UTILITIES.

2) CONTRACTOR SHALL HAND DIG WITHIN ONE (1) FOOT OF AT&T UNDERGROUND CONDUIT OR CABLE SYSTEMS.

G-27. CENTERPOINT ENERGY (ELECTRIC)

1. OVERHEAD LINES EXIST ON THE PROPERTY AND APPROXIMATE LOCATIONS ARE SHOWN ON THE DRAWINGS. CONTRACTOR SHALL VERIFY THEIR LOCATION PRIOR TO BEGINNING ANY CONSTRUCTION. TEXAS LAW, SECTION 752, HEALTH AND SAFETY CODE, FORBIDS ALL ACTIVITIES IN WHICH PERSONS OR THINGS MAY COME WITHIN SIX (6) FEET OF LIVE OVERHEAD HIGH VOLTAGE LINES. CONTRACTOR IS LEGALLY RESPONSIBLE FOR SAFETY OF CONSTRUCTION WORKERS UNDER THIS LAW TO ARRANGE FOR LINES TO BE TURNED OFF OR MOVED AND LOCATE EXISTING UNDERGROUND UTILITIES, CALL CENTERPOINT ENERGY AT LEAST 72 HOURS BEFORE COMMENCING WORK.

2. CONSTRUCTION THAT WILL REQUIRE EXCAVATION CLOSER THAN THREE (3) FEET TO CENTERPOINT FACILITIES SHALL BE BORED AND JACKED WITH THE WRITTEN APPROVAL FROM CENTERPOINT.

3. CONTRACTOR SHALL HAND DIG WITHIN ONE (1) FOOT OF CENTERPOINT ENERGY UNDERGROUND CONDUIT OR AS OTHERWISE REQUIRED BY CENTERPOINT.

G-28. CENTERPOINT ENERGY (GAS)

CAUTION: UNDERGROUND GAS FACILITIES
LOCATIONS OF CENTERPOINT ENERGY MAIN LINES (TO INCLUDE CENTERPOINT ENERGY, INTRASTATE PIPELINE, LLC. WHERE APPLICABLE) ARE SHOWN IN AN APPROXIMATE LOCATION ONLY. SERVICE LINES ARE USUALLY NOT SHOWN. OUR SIGNATURE ON THESE PLANS ONLY INDICATES THAT OUR FACILITIES ARE SHOWN IN APPROXIMATE LOCATION. IT DOES NOT IMPLY THAT A CONFLICT ANALYSIS HAS BEEN MADE. THE CONTRACTOR SHALL CONTACT THE UTILITY COORDINATING COMMITTEE AT (713) 223-4567, 1-800-669-8344 OR 811 A MINIMUM OF 48 HOURS PRIOR TO CONSTRUCTION TO HAVE MAIN AND SERVICE LINES FIELD LOCATED.

WHEN CENTERPOINT ENERGY PIPE LINE MARKINGS ARE NOT VISIBLE, CALL (713) 945-8036 OR (713) 945-8037 (7:00 A.M. TO 4:30 P.M.) FOR STATUS OF LINE LOCATION REQUEST BEFORE EXCAVATION BEGINS.

WHEN EXCAVATING WITHIN EIGHTEEN INCHES (18") OF THE INDICATED LOCATION OF CENTERPOINT ENERGY FACILITIES, ALL EXCAVATION MUST BE ACCOMPLISHED USING NON-MECHANIZED EXCAVATION PROCEDURES

WHEN CENTERPOINT ENERGY FACILITIES ARE EXPOSED, SUFFICIENT SUPPORT MUST BE PROVIDED TO THE FACILITIES TO PREVENT EXCESSIVE STRESS ON THE PIPING.
FOR EMERGENCIES REGARDING GAS LINES CALL (713) 659-3552 OR (713) 207-4200

THE CONTRACTOR IS FULLY RESPONSIBLE FOR ANY DAMAGES CAUSED BY HIS FAILURE TO EXACTLY LOCATE AND PRESERVE THESE UNDERGROUND FACILITIES.

ACTIVITIES ON OR ACROSS CENTERPOINT ENERGY FEE OR EASEMENT PROPERTY NO APPROVAL TO USE, CROSS OR OCCUPY CENTERPOINT FEE OR EASEMENT PROPERTY IS GIVEN. IF YOU NEED TO USE CENTERPOINT PROPERTY, PLEASE CONTACT THEIR SURVEYING & RIGHT OF WAY DIVISION AT (713) 207-6248 OR (713) 207-5769

G-29. COMCAST - THE CONTRACTOR SHALL NOTIFY COMCAST AT LEAST 72 HOURS BEFORE COMMENCING WORK TO LOCATE EXISTING UNDERGROUND CABLE.

G-30. ALL PIPE AND REINFORCEMENT STEEL SHALL BE KEPT FREE OF DIRT AND DEBRIS. ANY DAMAGE TO THE COATINGS OF THE VARIOUS MATERIALS MUST BE REPAIRED OR REPLACED BY THE CONTRACTOR WITH APPROVAL BY THE CITY.

G-31. CONTRACTOR SHALL BE RESPONSIBLE FOR MAINTAINING ADEQUATE AND POSITIVE DRAINAGE AT ALL TIMES DURING CONSTRUCTION.

G-32. NO CONNECTIONS SHALL BE MADE TO THE EXISTING WATER LINES OR SANITARY SEWERS UNTIL ALL PROPOSED LINES HAVE BEEN THOROUGHLY CLEANED, TESTED AND APPROVED BY THE CITY.

G-33. CONTRACTOR SHALL VERIFY PUBLIC INFRASTRUCTURE ALIGNMENT, CENTERLINE CURVE DATA AND STATIONING WITH APPROVED SUBDIVISION PLAT AND APPROVED PLANS.

G-34. ALL BACKFILL (INCLUDING CEMENT STABILIZED SAND) SHALL BE PLACED IN LIFTS THAT DO NOT EXCEED 8" (LOOSE), SHALL BE COMPACTED TO 95% STANDARD PROCTOR DENSITY AND BE TESTED BY A CERTIFIED TESTING LABORATORY.

G-35. ALL TRENCH BACKFILL SHALL BE TESTED AT A MINIMUM RATE OF ONE DENSITY TEST PER ONE LIFTS OF TRENCH BACKFILL PER 300 FEET OF TRENCH. TESTS SHALL BE TAKEN AT RANDOM LOCATION SELECTED BY THE LAB OR AS AS OTHERWISE REQUESTED BY THE CITY.

G-36. THIS CONSTRUCTION PROJECT THAT REQUIRES THE SWPPP, IT MUST BE INSTALLED BEFORE THE WORK BEGINS. IT MUST BE MAINTAINED THROUGHOUT THE DURATION OF THE PROJECT.

G-37. CONTRACTOR SHALL CONTACT CITY PUBLIC WORKS DEPARTMENT IMMEDIATELY IF WET SAND CONDITIONS ARE ENCOUNTERED. NO BEDDING SHALL BE INSTALLED IN WET CONDITIONS. WHEN WELL POINTING OR IN WET SAND CONDITIONS, MAINTAIN GROUND WATER 1' (FT.) BELOW BOTTOM OF TRENCH FOR A MINIMUM OF 24 HOURS AFTER BEDDING AND BACKFILL IS IN PLACE.

G-38. IN THE EVENT OF CONFLICT BETWEEN THE CITY OF RICHMOND DETAIL SPECIFICATIONS, CONSTRUCTION NOTES, OR CITY OF RICHMOND PUBLIC INFRASTRUCTURE DESIGN MANUAL, OR THE MORE STRINGENT REQUIREMENTS WILL GOVERN.

WATER DISTRIBUTION NOTES

W-1. EXCEPT AS OTHERWISE REQUIRED, WATER MAINS FOUR INCHES (4") THROUGH TWELVE INCHES (12") SHALL BE AWWA C-900, CLASS 150, DR 18. WATER MAINS LESS THAN 4 INCHES (4") DIAMETER SHALL BE PVC, ASTM D-2241, SDR-21 (PR-200), WITH RUBBER GASKET JOINTS OR APPROVED EQUAL. ALL POTABLE WATER PIPE USED IN THE PROJECT MUST MEET THE REQUIREMENTS OF AMERICAN NATIONAL STANDARDS INSTITUTE/NATIONAL SANITATION FOUNDATION STANDARD 61 (ANSI/NSF61). PIPE SHALL BE CERTIFIED TO CONFORM TO ANSI/NSF-61 AND SHALL BE MARKED "NSF-PW".

~~W-2. ALTERNATIVE WATER MAIN PIPE MATERIAL (WITH APPROVAL OF THE CITY): A) STEEL: AWWA C200, 150 PSI FOR LINES 4-INCHES TO 12-INCHES, 235 PSI FOR LINES GREATER THAN 12-INCHES. ALL PIPE COATINGS SHALL BE IN ACCORDANCE WITH AWWA C210. ALL NUTS AND BOLTS SHALL BE EPOXY COATED. B) DUCTILE IRON: AWWA C151 (ANSI A21.51) FOR LINES 4-INCHES TO 54-INCHES. PIPE SHALL BE LINED WITH POLYWRAP IN ACCORDANCE WITH AWWA C104 (ANSI A21.4).~~

W-3. INSTALLATION OF WATER MAINS SHALL BE IN ACCORDANCE WITH CURRENT AWWA APPROVED METHODS, STANDARDS AND MATERIALS, TEXAS COMMISSION ON ENVIRONMENTAL QUALITY (T.C.E.Q.) REGULATIONS AND CITY STANDARDS, CODES AND ORDINANCES.

W-4. ALL WATER MAINS SHALL HAVE A MINIMUM 3.5 FEET AND A MAXIMUM 5 FEET OF COVER WHEN CONSTRUCTED IN STREET RIGHTS-OF-WAY OR EASEMENTS, UNLESS APPROVED BY THE CITY.

W-5. FIRE HYDRANTS SHALL BE SET BEHIND BACK OF CURB AT APPROVED LOCATIONS. CENTER LINE OF FIRE HYDRANTS SHALL BE THREE (3) FEET FROM BACK OF CURB OF THE STREET UNLESS OTHERWISE REQUIRED IN THE PLANS. FIRE HYDRANTS SHALL BE INSTALLED A MINIMUM OF TEN (10) FEET FROM ALL SANITARY SEWERS AND APPURTENANCES. FIRE HYDRANTS SHALL BE LOCATED OPPOSITE PROPERTY LINES OR RIGHT-OF-WAY LINE EXTENSIONS, UNLESS OTHERWISE APPROVED BY THE CITY.

W-6. GATE VALVES, FIRE HYDRANTS AND BLOWOFFS SHALL BE COUNTER-CLOCKWISE OPENING.

W-7. ALL FITTINGS, VALVES AND FIRE HYDRANTS SHALL BE CAST IRON MECHANICAL JOINT TYPE UNLESS APPROVED IN WRITING BY THE CITY. ALL MECHANICAL JOINTS SHALL BE INSTALLED WITH MECHANICAL RESTRAINED JOINTS (EBAA IRON, INC., SERIES 2000PV OR EQUAL). NIPPLES FROM FITTING TO FITTING AT GATE VALVES SHALL BE 18" IN LENGTH.

W-8. A MINIMUM HORIZONTAL CLEARANCE OF NINE FEET (9') BETWEEN WATER MAINS AND SANITARY SEWER LINES SHALL BE MAINTAINED BY THE CONTRACTOR, EXCEPT AS APPROVED BY THE CITY.

W-9. THE CONTRACTOR SHALL PROVIDE FOR A MINIMUM OF SIX INCHES (6") CLEARANCE AT STORM SEWER AND WATER LINE CROSSINGS AND TWENTY-FOUR INCHES (24") MINIMUM CLEARANCE AT SANITARY SEWER AND WATER LINE CROSSINGS. WATER LINES SHALL BE LOCATED AT A HIGHER ELEVATION THAN THE SEWER WHEREVER POSSIBLE. WHEN NOT POSSIBLE, T.C.E.Q., "RULES AND REGULATIONS FOR PUBLIC WATER SYSTEMS", ARTICLE 290.44 WILL TAKE PRECEDENCE. IF A CONFLICT EXISTS, THE CONTRACTOR SHALL ADVISE THE DIRECTOR OF PUBLIC WORKS AND WATER SUPERINTENDENT IMMEDIATELY AND SHALL NOT CONTINUE FURTHER CONSTRUCTION WITHOUT CITY APPROVAL.

W-10. ABANDONMENT OF EXISTING WATER LINES SHALL BE PERFORMED BY THE CONTRACTOR IN ACCORDANCE WITH APPROVED PLANS OR WHEN APPROVAL FROM THE CITY PUBLIC WORKS DIRECTOR OR WATER SUPERINTENDENT IS OBTAINED IN WRITING.

W-11. TAPPING SLEEVE & VALVES ON THE EXISTING CITY WATER SYSTEM WILL BE INSTALLED BY A CITY APPROVED TAPPING CONTRACTOR.

W-12. NO CONNECTION SHALL BE MADE TO ANY EXISTING WATER LINES UNTIL THE NEW WATER LINES HAVE BEEN THOROUGHLY STERILIZED, CLEANED AND TESTED AND FINAL APPROVAL FROM THE CITY'S AUTHORIZED AGENT HAS BEEN OBTAINED IN WRITING.

W-13. ALL VALVES AND HYDRANTS SHALL BE STORED SO THAT THEY ARE PROTECTED FROM FREEZING.

W-14. ALL PRESSURE PIPE INSTALLATIONS SHALL BE TESTED FOR LEAKAGE. TEST PRESSURE SHALL BE 1.5 TIMES THE MAXIMUM DESIGN PRESSURE OR 150 PSIG, WHICHEVER IS GREATER. THE TEST SHALL HAVE A MINIMUM DURATION OF FOUR HOURS AND SHALL BE OBSERVED BY THE AUTHORIZED REPRESENTATIVE OF THE CITY PUBLIC WORKS DEPARTMENT.

W-15. STERILIZATION OF NEW WATER LINES SHALL BE DONE IN ACCORDANCE WITH AWWA C-651, LATEST EDITION. A MINIMUM OF ONE SAMPLE PER 1000 FEET OF WATER MAIN OR ONE SAMPLE PER SEPARATION SECTION OF WATER MAIN SHALL BE COLLECTED. IF THE SAMPLES FAIL TO MEET THE T.C.E.Q. DRINKING WATER STANDARD REQUIREMENTS, THE FLUSHING AND TESTING PROCESS SHALL BE REPEATED.

W-16. WATER LINES SHALL HAVE SAND EMBEDMENT TO TWELVE (12) INCHES ABOVE THE TOP OF PIPE.

W-17. WATER LINE TRENCHES UNDER PAVEMENT OR WITHIN THREE (3) FEET FROM EDGE OF PAVEMENT TO BE BACKFILLED WITH CEMENT STABILIZED SAND (2 SACKS OF CEMENT PER TON OF SAND) FROM THE TOP OF THE EMBEDMENT TO THE BASE OF PROPOSED BASE OF PROPOSED PAVING SUBGRADE LESS 6 INCHES.

W-18. ALL WATER LINE CONSTRUCTION CROSSING EXISTING ASPHALT AND/OR CONCRETE STREETS SHALL BE BORED AND JACKED, UNLESS OTHERWISE APPROVED BY THE PROJECT ENGINEER AND THE CITY.

W-19. TRENCH SAFETY SYSTEM IS REQUIRED FOR ALL WATER MAIN CONSTRUCTION.

W-20. CONCRETE THRUST BLOCKING IS REQUIRED FOR ALL VALVES, FIRE HYDRANTS AND FITTINGS.

W-21. A TRAC-HOE IS NOT A COMPACTOR. USE PROPER COMPACTING METHODS, SUCH AS, SHEEPSFOOT, JUMPING JACK, PLATE, ETC..

SANITARY SEWER CONSTRUCTION NOTES

S-1. SANITARY SEWERS SHALL BE CONSTRUCTED ACCORDING TO THESE PLANS AND SPECIFICATIONS AND THE CITY AND THE TEXAS COMMISSION ON ENVIRONMENTAL QUALITY (T.C.E.Q.) RULES AND REGULATIONS.

S-2. ALL MANHOLES SHALL BE PRECAST IN ACCORDANCE WITH DETAILS INCLUDING THE INTERIOR COATING. BRICK MANHOLES ARE NOT ALLOWED. ALL SANITARY MANHOLES SHALL BE INSTALLED WITH INFLOW PROTECTORS.

S-3. ALLOWABLE SANITARY SEWER PIPE MATERIAL:

A) GRAVITY LINES

1. POLYVINYL CHLORIDE (PVC), PIPE AND FITTINGS MEETING THE REQUIREMENTS OF ASTM D2241 (SDR 26; PR160), ASTM D1784, ASTM D3212 AND ASTM F477. FOR DEPTH LESS THAN 4 FEET AND GREATER THAN 20 FEET, INSTALL ASTM D2241 (SDR21, PR200).

2. DUCTILE IRON (D.I.P.), AWWA C-151, AWWA C-111, STANDARD CLASS 150, WITH BELL AND SPIGOT PUSH-ON JOINTS, ALL PIPE SHALL HAVE AN INTERIOR POLYETHYLENE COATING OF 40-MILS AND AN EXTERIOR POLYETHYLENE WRAP OF 8-MILS.

B) FORCE MAINS

1. PVC, 4-INCH TO 12-INCH, AWWA C900, DR18, CLASS 150, ASTM D3139, ASTM F477. (GREEN COLOR)

S-4. ALL D.I.P. SANITARY SEWER PIPES SHALL BE LINED WITH POLYWRAP AND INSTALLED WITH CATHODIC PROTECTION.

S-5. THE CONTRACTOR SHALL NOTIFY THE CITY PUBLIC WORKS DEPARTMENT AT LEAST 24 HOURS PRIOR TO PRESSURE AND DEFLECTION TESTS ON ALL GRAVITY SANITARY SEWERS. ALL TESTS SHALL BE MONITORED BY AN AUTHORIZED AGENT OF THE CITY.

S-6. ALL GRAVITY SANITARY SEWER PIPE SHALL BE LOW PRESSURE AIR TESTED AND MANHOLES VACUUM TESTED IN ACCORDANCE WITH T.C.E.Q. REQUIREMENTS. FORCE MAINS SHALL BE HYDROSTATIC TESTED AT A MINIMUM OF 150 PSI.

S-7. DEFLECTION TESTS SHALL BE PERFORMED ON ALL FLEXIBLE AND SEMI-RIGID PIPE. THE CITY MAY REQUIRE SERVICE LEADS TO BE RANDOMLY TESTED. DEFLECTION TESTS SHALL BE CONDUCTED AFTER THE FINAL BACKFILL HAS BEEN IN PLACE AT LEAST 30 DAYS. NO PIPE SHALL EXCEED A DEFLECTION OF 5%. THE TEST SHALL BE CONDUCTED USING A MANDREL HAVING AN OUTSIDE DIAMETER EQUAL TO 95% OF THE AVERAGE INSIDE DIAMETER OF THE PIPE. THE MANDREL SHALL HAVE A MINIMUM OF 9 RUNNERS WITH THE CONTACT LENGTH OF EACH RUNNER EQUAL TO OR GREATER THAN THE PIPE'S NOMINAL DIAMETER. THE TEST SHALL BE PERFORMED WITHOUT MECHANICAL PULLING DEVICES.

S-8. SANITARY SEWER MANHOLE RIMS, EXCEPT IN PAVED AREAS, SHALL BE SET 4-INCHES ABOVE FINISHED GRADE WITHIN STREET RIGHT-OF-WAY, AND 6-INCHES ABOVE FINISHED LOT GRADES WITHIN EASEMENTS. CLEAN FILL MAY BE PLACED ADJOINING THE MANHOLE AND GRADED AWAY FROM THE RIM FOR SURFACE WATER DRAINAGE.

S-9. SANITARY MANHOLES BELOW THE 100-YEAR FLOOD PLAIN (OR WHERE OTHERWISE REQUIRED) SHALL BE WATERPROOFED USING A NEOPRENE GASKET. ONLY STAINLESS STEEL SCREWS OR NUTS & BOLTS CAN BE USED TO HOLD DOWN THE COVER. A VENT PIPE EXTENDING ONE FOOT ABOVE THE FLOODPLAIN ELEVATION SHALL BE PROVIDED, UNLESS OTHERWISE APPROVED.

S-10. SANITARY LINES AND MANHOLES PARALLEL TO WATER LINES SHALL BE INSTALLED WITH AT LEAST A 9-FOOT HORIZONTAL SEPARATION (OUTSIDE TO OUTSIDE). SANITARY SEWERS INSTALLED CROSSING UNDER WATER MAIN SHALL COMPLY WITH T.C.E.Q. REQUIREMENTS.

S-11. ALL SANITARY SEWERS SHALL BE CONSTRUCTED ON A STRAIGHT ALIGNMENT AND ON A UNIFORM GRADE. GRAVITY SEWERS SHALL BE CONSTRUCTED WITH THE PIPE BELL FACING UPSTREAM. ALL 6-INCH SANITARY SERVICE LEADS SHALL BE LAID WITH A MINIMUM GRADE OF 0.70%

S-12. ALL SEWER LEADS AND STUBOUTS SHALL BE MARKED IN ACCORDANCE WITH THE DETAILS. THE CONTRACTOR SHALL BE RESPONSIBLE FOR MAINTAINING THE MARKERS IN GOOD AND PLUMB CONDITION WITH A VERTICAL ALIGNMENT. IF DAMAGED, THE CONTRACTOR SHALL REPLACE THE MARKER.

S-13. ALL SEWER LINES (INCLUDING SERVICE LEADS) ENTERING A MANHOLE AT AN ELEVATION GREATER THAN 24-INCHES ABOVE THE MANHOLE INVERT MUST BE CONSTRUCTED WITH AN EXTERIOR DROP PIPE IN ACCORDANCE WITH THE DETAILS.

S-14. STEPS IN MANHOLES ARE PROHIBITED.

S-15. CONTRACTOR SHALL PROVIDE ADEQUATE CONCRETE THRUST BLOCKING AT ALL FORCE MAIN BENDS.

S-16. AT ALL LOTS WHERE TOP OF PIPE IS GREATER THAN 8-FEET BELOW FINISHED GRADE, PROVIDE A 6-INCH SANITARY SEWER STACK OR RISER. STACKS AND RISERS SHALL BE EXTENDED TO WITHIN 6 FEET OF FINISHED GRADE. STACKS SHALL BE MARKED FOR LOCATION AS INDICATED ON THE DETAILS.

S-17. FORCE MAIN SHALL BE LAID WITH DETECTOR TAPE LAID AT 6" ABOVE THE PIPE. THE DETECTOR TAPE MUST BEAR THE LABEL "PRESSURIZED WASTEWATER" IN 1.5 INCH HIGH LETTERS, REPEATED CONTINUOUSLY, FOR THE ENTIRE LENGTH OF THE FORCE MAIN.

STORM SEWER NOTES

ST-1. ALL STORM SEWERS SHALL MEET THE REQUIREMENTS OF THE CITY, FORT BEND COUNTY AND FORT BEND COUNTY DRAINAGE DISTRICT (WHEN APPLICABLE).

ST-2. ALL STORM SEWER MANHOLE AND INLET COVERS SHALL BE LABELED "STORM SEWER" IN ACCORDANCE WITH THE DETAILS.

ST-3. ALL STORM SEWER PIPE SHALL BE REINFORCED CONCRETE PIPE, A.S.T.M. C-76, CLASS III (MINIMUM) INSTALLED, BEDDED AND BACKFILLED IN ACCORDANCE WITH THE CITY DETAILS AND FORT BEND COUNTY DRAINAGE DISTRICT CRITERIA. ALL REINFORCED CONCRETE PIPE 42-INCH DIAMETER AND GREATER SHALL HAVE WATER-TIGHT RUBBER GASKET JOINTS. CONTRACTOR MAY USE TAL-COAT OR EQUAL FOR PIPE JOINTS WITH PIPE LESS THAN 42" DIAMETER. ALL STORM SEWER SHALL BE BACKFILLED WITH SELECT FILL MATERIAL COMPACTED TO 95% STANDARD PROCTOR COMPACTION, ASTM D-698, IN ACCORDANCE WITH THE DETAILS. CONTRACTOR SHALL USE MECHANICAL ROLLER OR MECHANICAL TAMPER IN COMPACTING ALL BACKFILL FOR PROJECT.

ST-4. ALL STORM SEWER STRUCTURES SUCH AS MANHOLES AND INLETS SHALL BE BACKFILLED WITH CEMENT STABILIZED SAND. CEMENT STABILIZED SAND BACKFILL SHALL EXTEND A MINIMUM OF TWENTY-FOUR INCHES (24") FROM THE OUTSIDE WALL OF ALL STRUCTURES. (2 SACKS OF CEMENT PER TON OF SAND.)

ST-5. AREAS ADJACENT TO THE PAVEMENT SHALL BE GRADED TO POSITIVELY DRAIN TOWARD INLETS, CONCRETE CURB AND/OR ROAD DITCHES IF DISTURBED DURING CONSTRUCTION. CONTRACTOR SHALL PROVIDE MATERIALS, LABOR AND EQUIPMENT TO PERFORM ALL GRADING OPERATIONS.

ST-6. CONTRACTOR SHALL ADJUST EXISTING WATER LINE MAINS AND WATER LINE SERVICES IN CONFLICT WITH A STORM SEWER. CONTRACTOR SHALL COORDINATE THE DISRUPTION OF WATER SERVICE DURING THE WATER LINE LOWERING OPERATION WITH THE CITY PUBLIC WORKS DEPARTMENT.

ST-7. ADJUST ALL STORM SEWER MANHOLE COVERS TO MATCH FINISHED GRADE ELEVATIONS.

ST-8. ALL PRECAST CONCRETE STRUCTURES SHALL BE REINFORCED AND SHALL BE DESIGNED TO WITHSTAND AASHTO H-20 LOADINGS.

ST-9. ALTERNATIVE STORM SEWER PIPE MATERIAL (WITH APPROVAL OF THE CITY):

A) STEEL: AWWA C200, 150 PSI FOR LINES 4-INCHES TO 12-INCHES, 235 PSI FOR LINES GREATER THAN 12-INCHES. ALL PIPE COATINGS SHALL BE IN ACCORDANCE WITH AWWA C210. ALL NUTS AND BOLTS SHALL BE EPOXY COATED.

B) DUCTILE IRON: AWWA C151 (ANSI A21.51) FOR LINES 4-INCHES TO 54-INCHES. PIPE SHALL BE LINED WITH POLYWRAP IN ACCORDANCE WITH AWWA C104 (ANSI A21.4).

STREET AND PAVING CONSTRUCTION NOTES

P-1. ALL PAVING SHALL BE CONSTRUCTED ACCORDING TO THE PLANS AND SPECIFICATIONS AND CITY REQUIREMENTS.

P-2. THE CONTRACTOR SHALL NOTIFY CITY PUBLIC WORKS DEPARTMENT AT LEAST 24 HOURS PRIOR TO ANY AND ALL SUBGRADE TESTING AND CONCRETE POURS.

P-3. ALL TEMPORARY AND PERMANENT SIGNAGE MUST COMPLY WITH THE LATEST REVISION OF THE "TEXAS MANUAL ON UNIFORM TRAFFIC CONTROL DEVICES".

P-4. CONTRACTOR SHALL PROTECT ALL UTILITIES, SIDEWALKS, PAVEMENT, ETC. AND SHALL REPAIR OR REPLACE ANY FACILITIES DAMAGED DURING PAVING OR GRADING OPERATIONS.

P-5. EXISTING PAVEMENTS, CURBS, SIDEWALKS DRIVEWAYS, ETC., DAMAGED OR REMOVED DURING CONSTRUCTION SHALL BE REPLACED ACCORDING TO THE CITY STANDARDS.

P-6. ALL DISTURBED AREAS WITHIN STREET RIGHT-OF-WAY AND EASEMENTS NOT COVERED BY PAVEMENT OR STRUCTURE SHALL BE HYDRO-MULCHED AND WATERED UNTIL VEGETATION ESTABLISHMENT.

P-7. AREAS TO BE FILLED SHALL BE CLEARED AND GRUBBED, SCARIFIED AND COMPACTED TO AT LEAST 95% OF MAXIMUM DENSITY (+/- 2% OF OPTIMUM MOISTURE) PER ASTM D-698, TO A DEPTH OF 6" PRIOR TO FILL PLACEMENT. FILL MATERIAL SHALL BE PLACED IN MAXIMUM 8" THICK LIFTS (MEASURED LOOSE) AND COMPACTED TO AT LEAST 95% OF MAXIMUM DENSITY (+/- 2% OF OPTIMUM MOISTURE) PER ASTM D-698. FILL SHALL BE CLEAN EARTH AND BE FREE FROM TRASH, VEGETATION AND LARGE STONES. TEST REPORTS INDICATING COMPLIANCE WITH DENSITY REQUIREMENTS SHALL BE SUBMITTED TO THE CITY PRIOR TO PLACEMENT OF PAVEMENT.

P-8. THE SUBGRADE IS TO BE SCARIFIED AND COMPACTED TO 95% STANDARD PROCTOR DENSITY (+/- 2% OF OPTIMUM MOISTURE) PER ASTM D-698. THE SUBGRADE SHALL BE STABILIZED TO 8" DEPTH WITH A MINIMUM EIGHT PERCENT (8%) LIME BY WEIGHT OR AS REQUIRED TO ACHIEVE A STABILIZED SOIL P.I. OF 20 OR LESS. LIME REQUIREMENTS SUBGRADE SHALL EXTEND A MINIMUM OF 2-FEET BEHIND THE BACK OF ALL CURB AND BEYOND THE EDGE OF PAVEMENT.

P-9. TESTING OF FILL, SUBGRADE AND PAVEMENT TO DOCUMENT COMPLIANCE WITH THE CITY REQUIREMENTS SHALL BE COMPLETED BY A CERTIFIED (REFERENCE: THE ASSOCIATION FOR LABORATORY ACCREDITATION) TESTING LABORATORY APPROVED BY THE CITY. A COPY OF ALL TEST RESULTS SHALL BE SUBMITTED TO THE CITY PUBLIC WORKS DIRECTOR.

P-10. ALL INTERSECTION EDGE RETURN RADII SHALL BE 25 FEET ON LOCAL RESIDENTIAL AND MINOR COLLECTOR STREETS. ALL CUL-DE-SAC RETURN RADII SHALL BE 35 FEET UNLESS NOTED OTHERWISE. MINIMUM GRADES AT INTERSECTIONS AND IN CUL-DE-SACS SHALL BE 1.00% MINIMUM GRADE ON CURB AND GUTTER STREETS SHALL BE 0.30%.

P-11. PAVING JOINTS (TRANSVERSE AND LONGITUDINAL) SHALL BE IN ACCORDANCE WITH THE DETAILS.

P-12. WHEN A THICKER PAVEMENT ROADWAY INTERSECTS WITH A THINNER PAVEMENT ROADWAY, THE THICKER PAVEMENT SHALL BE CONSTRUCTED FOR THE ENTIRE INTERSECTION TO THE CURB RETURNS ON ALL INTERSECTING STREETS.

P-13. WHERE PROPOSED PAVEMENT IS TO CONNECT TO EXISTING CONCRETE PAVEMENT, THE CONNECTION SHALL BE COMPLETED IN ACCORDANCE WITH THE PAVEMENT UNDERCUT DETAIL.

P-14. SIDEWALKS SHALL BE LOCATED AS SHOWN ON THE PLANS. SIDEWALK RAMP CONSTRUCTION SHALL BE IN CONFORMANCE WITH THE TEXAS ACCESSIBILITY STANDARDS (T.A.S.) AND CITY REQUIREMENTS.

P-15. ALL INTERSECTIONS SHALL BE CONSTRUCTED WITH SIDEWALK RAMPS IN ACCORDANCE WITH THE TEXAS ACCESSIBILITY STANDARDS, THE AMERICAN DISABILITIES ACT AND THE CITY REQUIREMENTS.

~~P-16. CONCRETE SHALL CONTAIN A MINIMUM 5-1/2 SACKS OF PORTLAND CEMENT PER CUBIC YARD OF CONCRETE WITH A MINIMUM 3500 PSI COMPRESSIVE STRENGTH AT 28 DAYS. CONCRETE SHALL HAVE A SLUMP OF 4 INCHES WITH ALLOWABLE DIFFERENCES OF 1 AND AIR CONTENT OF 4.5 PERCENT. AIR ENTRAINMENT ADMIXTURES SHALL CONFORM TO ASTM C260. FLYASH IS NOT ALLOWED.~~

P-17. CONCRETE PAVEMENT THICKNESSES SHALL BE CONSTRUCTED IN ACCORDANCE WITH THE DETAILS. REINFORCING STEEL SHALL CONFORM TO ASTM A-615, GRADE 60. A MINIMUM OF 18" LAPS ON ALTERNATE STEEL BARS SHALL BE PROVIDED. ALL REINFORCING STEEL SHALL BE SECURELY TIED AND SUPPORTED WITH BAR CHAIRS IN ACCORDANCE WITH ACI STANDARDS. ALL RE-BAR TO BE 100% TIED, OVERLAPS WILL BE DOUBLE TIED.
SPACING FOR REINFORCING STEEL SHALL BE AS FOLLOWS:

1. 7" CONCRETE PAVEMENT - #4 BAR ON 18" CENTER EACH WAY.
2. 6" CONCRETE PAVEMENT AND DRIVEWAYS - #4 BAR ON 18" CENTER EACH WAY.
3. SIDEWALKS AND CONCRETE SLOPE PAVEMENT - MINIMUM 4-1/2" THICK CONCRETE - #3 BAR ON 24" CENTER EACH WAY. (2% CROSS SLOPE MAXIMUM)

WIRE MESH IS NOT ALLOWED IN SIDEWALKS OR STREETS WITHIN THE CITY OF RICHMOND OR ITS ETJ.

P-18. CONCRETE SHALL NOT BE PLACED WHEN THE AMBIENT TEMPERATURE IS 40 DEGREES FAHRENHEIT AND FALLING. CONCRETE MAY BE PLACED IF THE AMBIENT TEMPERATURE IS 35 DEGREES AND RISING. CONTRACTOR SHALL PROVIDE AN APPROVED COVERING MATERIAL (COTTON MATS, POLYETHYLENE SHEETING, ETC.) IN THE EVENT TEMPERATURE SHOULD FALL BELOW 32 DEGREES FAHRENHEIT WITHIN 72 HOURS OF PLACING CONCRETE. NO SALT OR OTHER CHEMICALS SHALL BE ADDED TO CONCRETE TO PREVENT FREEZING. NO CONCRETE SHALL BE PLACED WHEN THE MIXTURE TEMPERATURE IS ABOVE 95 DEGREES FAHRENHEIT. CONCRETE SHALL BE PLACED WITHIN 60 MINUTES OF THE BATCH TIME.

P-19. ALL CONCRETE PLACED SHALL BE UNIFORMLY SPRAYED WITH A MEMBRANE CURING COMPOUND (TXDOT DMS-4650, TYPE 2, WHITE). CURING COMPOUND SHALL BE APPLIED IN ACCORDANCE WITH TXDOT STANDARD SPECIFICATIONS.

P-20. CONCRETE SAMPLES: CYLINDERS (SET OF 4), SLUMP AND AIR ENTRAINMENT TESTS ARE REQUIRED FOR EACH 100 CUBIC YARDS AND EACH FRACTION THEREOF. A MINIMUM OF ONE SET OF SAMPLES IS REQUIRED PER CONCRETE POUR. THE CITY RESERVES THE RIGHT TO REQUEST ADDITIONAL TESTS.

P-21. FINISHED PAVEMENT SHALL HAVE CORE SAMPLES TAKEN EVERY 750 LINEAR FEET (750'), STAGGERED ACROSS THE ROADWAY CROSS-SECTION, AND IN EVERY CUL-DE-SAC. ADDITIONAL CORE SAMPLES MAY BE REQUIRED AT THE DISCRETION OF THE CITY ENGINEER. THESE CORE SAMPLES SHALL BE TESTED TO INSURE THAT THE PAVEMENT THICKNESS MEETS THE REQUIRED PROJECT THICKNESS.

P-22. PROPER TESTING AND LABORATORY DOCUMENTATION IS REQUIRED. FAILURE TO MEET THE MINIMUM PAVEMENT REQUIREMENTS WILL RESULT IN THE REJECTION OF PAVEMENT. IMMEDIATE REMOVAL AND REPLACEMENT OF SUBSTANDARD PAVEMENT SECTIONS WILL BE NECESSARY TO SATISFY THESE REQUIREMENTS.

P-23. CRACKS 1/16 INCH OR LARGER ARE NOT ACCEPTABLE IN NEW PAVEMENT. CRACKS 1/16 INCH OR LESS WILL BE ADDRESSED AN INDIVIDUAL BASIS, SUBJECT TO APPROVAL OR REJECTION.

P-24. STREET NAME SIGNS SHALL BE LOCATED AT ALL INTERSECTIONS. CONTRACTOR SHALL VERIFY STREET NAME WITH RECORDED PLAT. STOP SIGNS AND OTHER TRAFFIC SIGNAGE SHALL BE PLACED IN ACCORDANCE WITH THE PLANS AND THE "TEXAS MANUAL ON UNIFORM TRAFFIC CONTROL DEVICES."

P-25. A DOUBLE-REFLECTORIZED BLUE TRAFFIC PAVEMENT MARKER SHALL BE PLACED ONE FOOT OFFSET OF THE PAVEMENT CENTERLINE ON FIRE HYDRANT SIDE, AT ALL FIRE HYDRANT LOCATIONS, BY THE PAVING CONTRACTOR. FIRE HYDRANTS LOCATED AT INTERSECTIONS SHALL HAVE A MARKER PLACED ON EACH STREET.

P-26. ALL PAVEMENT MARKINGS SHALL BE REFLECTORIZED, PERMANENT PREFABRICATED PAVEMENT MARKINGS MEETING THE MINIMUM REQUIREMENTS OF TxDOT, DMS-8240, TYPE A OR B, INSTALLED IN ACCORDANCE WITH TxDOT STANDARD SPECIFICATION ITEM 668. CENTERLINE PAVEMENT MARKINGS, STOP BARS AND MISCELLANEOUS MARKINGS SHALL HAVE A MINIMUM THICKNESS OF 90 MILS. LANE DELINEATION AND ROAD EDGE PAVEMENT MARKINGS SHALL HAVE A MINIMUM THICKNESS OF 60 MILS. ALL PAVEMENT MARKINGS SHALL BE INSTALLED WITH DOUBLE ADHESIVE AS REQUIRED BY THE CITY. OUTSIDE THE CITY (IN THE ETJ) COMPLY WITH FORT BEND COUNTY REQUIREMENTS.

P-27. ALL DRIVEWAYS SHALL BE LOCATED TO AVOID EXISTING CURB INLET STRUCTURES.

P-28. CONCRETE MIX DESIGN SHALL BE SENT TO THE CITY FOR APPROVAL WITH A MINIMUM OF 72 HOURS BEFORE THE FIRST CONCRETE POUR.

P-29. VEHICLES OF ALL TYPES ARE PROHIBITED FROM DRIVING ON NEW PAVEMENTS THREE (3) DAYS AFTER THE PLACING OF CONCRETE AND UNTIL THE CONCRETE HAS REACHED A MINIMUM OF 3500 PSI.

P-30. THE SUBGRADE SURFACE SHALL BE SMOOTH AND IN CONFORMITY WITH LINES & GRADES ON THE PLANS. WHEN THE SUBGRADE FAILS TO MEET DENSITY REQUIREMENTS OR SHOULD IT LOSE THE REQUIRED STABILITY, DENSITY, OR FINISH, IT SHALL BE REWORKED IN ACCORDANCE WITH TxDOT SUBARTICLE 260.4:

(7) "REWORKING A SECTION", WHICH MAY REQUIRE AN ADDITIONAL 25% OF THE SPECIFIED LIME AMOUNT.

P-31. FLOODING OF THE STREETS SHALL OCCUR 24 HOURS PRIOR TO THE INITIAL INSPECTION.

P-32. SUBGRADE DENSITIES SHALL BE RETAKEN IN THE EVENT OF A 1 INCH (1") OR GREATER RAINFALL OR IN THE EVENT THE AMBIENT AIR TEMPERATURE FALLS BELOW 32 DEGREES FAHRENHEIT FOR GREATER THAN THREE HOURS. SUBGRADE DENSITIES SHALL BE RETAKEN IF CONCRETE HAS NOT BEEN PLACED WITHIN 14 CALENDAR DAYS FROM FINAL COMPACTION.

SPECIAL NOTES

SN-1. BEFORE THE INITIAL WALK-THROUGH IS SCHEDULED,

SN-2. NEGATIVE BACTERIOLOGICAL RESULTS FOR PUBLIC WATER LINES MUST BE SUBMITTED TO PUBLIC WORKS.

SN-3. SATISFACTORY MANDREL, HYDROSTATIC, SANITARY, AND MANHOLE VACUUM TESTS, MUST BE COMPLETED.

SN-4. THE STORM SYSTEM MUST BE COMPLETELY CLEANED FOR A LAMP INSPECTION BEFORE OR THE DAY OF THE WALK-THROUGH FOR ACCEPTANCE.

SN-5. THE MANHOLES, GRATES, VALVES AND HYDRANTS PROPERLY ADJUSTED/PAINTED TO THE CITY OF RICHMOND'S COLOR CODE.

TEXAS COMMISSION ON ENVIRONMENTAL QUALITY WATER DISTRIBUTION SYSTEM GENERAL CONSTRUCTION NOTES

TEXAS COMMISSION ON ENVIRONMENTAL QUALITY
WATER DISTRIBUTION SYSTEM
GENERAL CONSTRUCTION NOTES

1. This water distribution system must be constructed in accordance with the current Texas Commission on Environmental Quality (TCEQ) Rules and Regulations for Public Water Systems 30 Texas Administrative Code (TAC) Chapter 290 Subchapter D. When conflicts are noted with local standards, the more stringent requirement shall be applied. Construction for public water systems must always, at a minimum, meet TCEQ's Rules and Regulations for Public Water Systems.

2. An appointed engineer shall notify in writing the local TCEQ's Regional Office when construction will start. Please keep in mind that upon completion of the water works project, the engineer or owner shall notify the commission's Water Supply Division, in writing, as to its completion and attest to the fact that the work has been completed essentially according to the plans and change orders on file with the commission as required in 30 TAC §290.39(h)(3).

3. All newly installed pipes and related products must conform to American National Standards Institute/National Sanitation Foundation (ANSI/NSF) Standard 61-G and must be certified by an organization accredited by ANSI, as required by 30 TAC §290.44(a)(1).

4. Plastic pipe for use in public water systems must bear the National Sanitation Foundation Seal of Approval (NSF pw-G) and have an ASTM design pressure rating of at least 150 psi or a standard dimension ratio of 26 or less, as required by 30 TAC §290.44(a)(2).

5. No pipe which has been used for any purpose other than the conveyance of drinking water shall be accepted or relocated for use in any public drinking water supply, as required by 30 TAC §290.44(a)(3).

6. Water transmission and distribution lines shall be installed in accordance with the manufacturer's instructions. However, the top of the water line must be located below the frost line and in no case shall the top of the water line be less than 24 inches below ground surface, as required by 30 TAC §290.44(a)(4).

7. Pursuant to 30 TAC §290.44(a)(5), the hydrostatic leakage rate shall not exceed the amount allowed or recommended by the most current AWWA formulas for PVC pipe, cast iron and ductile iron pipe. Include the formulas in the notes on the plans.

a. The hydrostatic leakage rate for polyvinyl chloride (PVC) pipe and appurtenances shall not exceed the amount allowed or recommended by formulas in America Water Works Association (AWWA) C-605 as required in 30 TAC §290.44(a)(5). Please ensure that the formula for this calculation is correct and most current formula is in use;

$$Q = \frac{LD\sqrt{P}}{148{,}00}$$

Where:

Q = the quantity of makeup water in gallons per hour,
L = the length of the pipe section being tested, in feet,
D = the nominal diameter of the pipe in inches, and
P = the average test pressure during the hydrostatic test in pounds per square inch (psi).

b. The hydrostatic leakage rate for ductile iron (DI) pipe and appurtenances shall not exceed the amount allowed or recommended by formulas in America Water Works Association (AWWA) C-600 as required in 30 TAC §290.44(a)(5). Please ensure that the formula for this calculation is correct and most current formula is in use;

$$L = \frac{SD\sqrt{P}}{148{,}00}$$

Where:

L = the quantity of makeup water in gallons per hour,
S = the length of the pipe section being tested, in feet,
D = the nominal diameter of the pipe in inches, and
P = the average test pressure during the hydrostatic test in pounds per square inch (psi).

8. Projects constructed on or after January 4, 2014 must comply with changes to the Safe Drinking Water Act that reduce the maximum allowable lead content of pipes, pipe fittings, plumbing fittings, and fixtures to 0.25 percent.

9. The system must be designed to maintain a minimum pressure of 35 psi at all points within the distribution network at flow rates of at least 1.5 gallons per minute per connection. When the system is intended to provide firefighting capability, it must also be designed to maintain a minimum pressure of 20 psi under combined fire and drinking water flow conditions as required by 30 TAC §290.44(d).

10. The contractor shall install appropriate air release devices in the distribution system at all points where topography or other factors may create air locks in the lines. All vent openings to the atmosphere shall be covered with 16-mesh or finer, corrosion resistant screening material or an acceptable equivalent as required by 30 TAC §290.44(d)(1).

11. Pursuant to 30 TAC §290.44(d)(4), accurate water meters shall be provided. Service connections and meter locations should be shown on the plans.

12. Pursuant to 30 TAC §290.44(d)(5), sufficient valves and blowoffs to make repairs. The engineering report shall establish criteria for this design.

13. Pursuant to 30 TAC §290.44(d)(6), the system shall be designed to afford effective circulation of water with a minimum of dead ends. All dead-end mains shall be provided with acceptable flush valves and discharge piping. All dead-end lines less than two inches in diameter will not require flush valves if they end at a customer service. Where dead ends are necessary as a stage in the growth of the system, they shall be located and arranged to ultimately connect the ends to provide circulation.

14. The contractor shall maintain a minimum separation distance in all directions of nine feet between the proposed waterline and wastewater collection facilities including manholes and septic tank drainfields. If this distance cannot be maintained, the contractor must immediately notify the project engineer for further direction. Separation distances, installation methods, and materials utilized must meet 30 TAC §290.44(e)(1-4) of the current rules.

15. Pursuant to 30 TAC §290.44(e)(5), the separation distance from a potable waterline to a wastewater main or lateral manhole or cleanout shall be a minimum of nine feet. Where the nine-foot separation distance cannot be achieved, the potable waterline shall be encased in a joint of at least 150 psi pressure class pipe at least 18 feet long and two nominal sizes larger than the new conveyance. The space around the carrier pipe shall be supported at five-foot intervals with spacers or be filled to the springline with washed sand. The encasement pipe shall be centered on the crossing and both ends sealed with cement grout or manufactured sealant.

16. Pursuant to 30 TAC §290.44(e)(6), fire hydrants shall not be installed within nine feet vertically or horizontally of any wastewater line, wastewater lateral, or wastewater service line regardless of construction.

17. Pursuant to 30 TAC §290.44(e)(7), suction mains to pumping equipment shall not cross wastewater mains, wastewater laterals, or wastewater service lines. Raw water supply lines shall not be installed within five feet of any tile or concrete wastewater main, wastewater lateral, or wastewater service line.

18. Pursuant to 30 TAC §290.44(e)(8), waterlines shall not be installed closer than ten feet to septic tank drainfields.

19. Pursuant to 30 TAC §290.44(f)(1), the contractor shall not place the pipe in water or where it can be flooded with water or sewage during its storage or installation.

20. Pursuant to 30 TAC §290.44(f)(2), when waterlines are laid under any flowing or intermittent stream or semi-permanent body of water the water main shall be installed in a separate watertight pipe encasement. Valves must be provided on each side of the crossing with facilities to allow the underwater portion of the system to be isolated and tested.

21. The contractor shall disinfect the new water mains in accordance with AWWA Standard C-651 and then flush and sample the lines before being placed into service. Samples shall be collected for microbiological analysis to check the effectiveness of the disinfection procedure which shall be repeated if contamination persists. A minimum of one sample for each 1,000 feet of completed water line will be required or at the next available sampling point beyond 1,000 feet as designated by the design engineer, in accordance with 30 TAC §290.44(f)(3).

FSGROUP ARCHITECTS
13105 Northwest Fwy Suite 1110
Houston Texas 77040
713 344 1752 Office
www.fsdesignbuild.com

PROJECT NAME

INFORMATION TECHNOLGY BUILDING
EUGENE HEIMANN CIRCLE
FORT BEND COUNTY . TEXAS

CONSULTANTS
ISANI CONSULTANTS L.P
ISANI
civil \ design \ engineers
10448 WEST OFFICE DRIVE
HOUSTON, TEXAS 77042
T: (713) 747 2399
F: (713) 747 4797
TBPE FIRM REGISTRATION #4575

ISANI PROJECT NO: 23LD73

PROFESSIONAL SEAL

05/15/2024

ISSUED FOR

ISSUED FOR PROPOSAL AND PERMIT

REVISIONS

No.	DESCRIPTION	DATE

KEY PLAN

SHEET TITLE

GENERAL NOTES

SCALE: As indicated

DATE: 05/15/2024

PROJECT NUMBER: 2319

SHEET NUMBER

C0.01

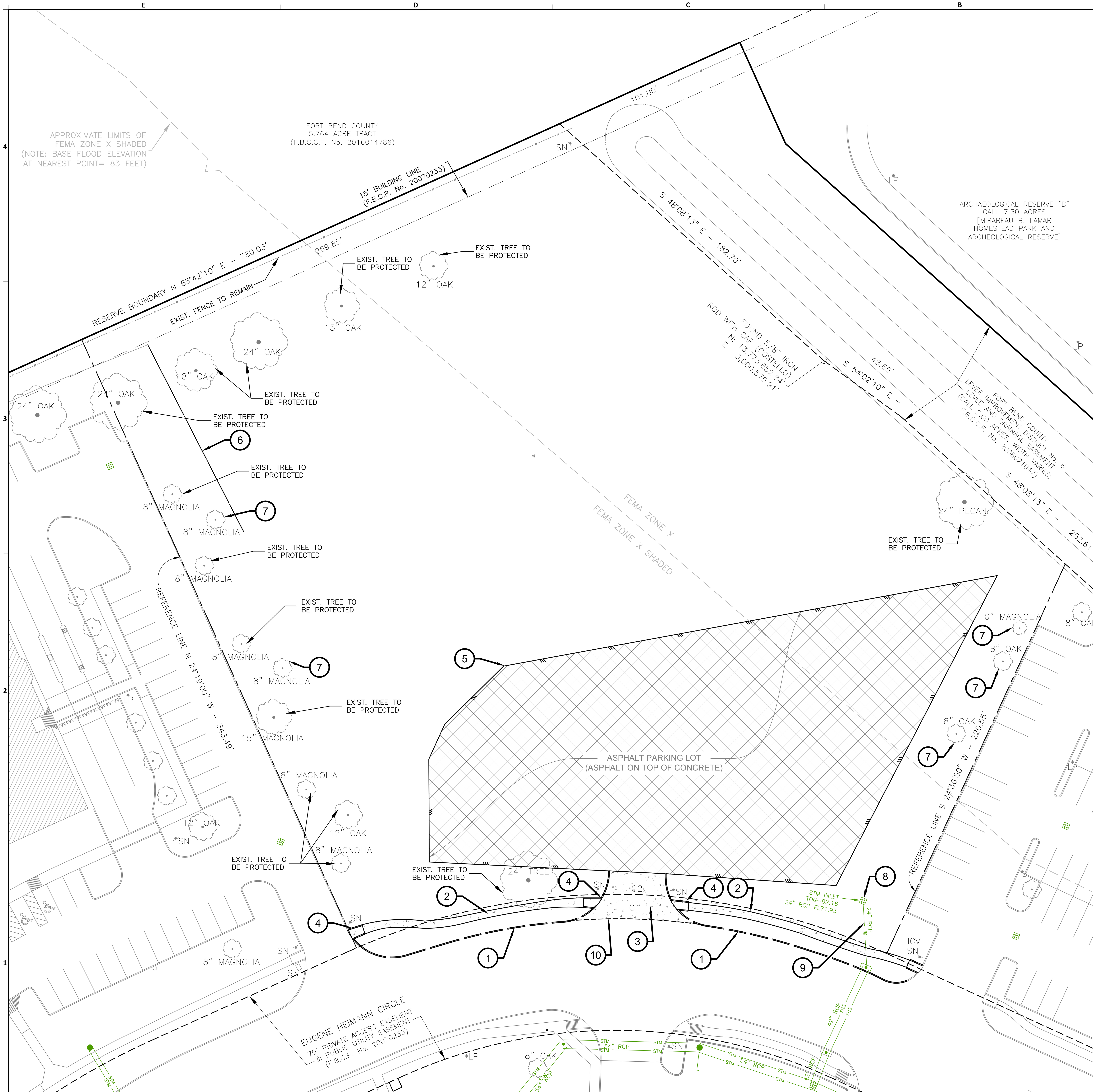

LEGEND EXISTING:

- PROPERTY CORNER
- PP — POWER POLE
- MH — MANHOLE
- CO — CLEANOUT
- WV — WATER VALVE
- FH — FIRE HYDRANT
- WM — WATER METER
- TREE
- CURB LINE
- EDGE ASPHALT
- CURB INLET
- AREA INLET
- EDGE OF BUILDING
- UGP — OVERHEAD ELECTRIC
- SAN — SANITARY SEWER LINE
- STM — STORM SEWER LINE
- W — WATERLINE
- UGT — UNDERGROUND TELECOM LINE

SCALE 1" = 20'

LEGEND:

- EXIST. ASPHALT PAVEMENT
- EXIST. CONCRETE PAVEMENT

DEMOLITION KEY NOTES:

1. EXIST CONCRETE CURB TO BE DEMOLISHED
2. EXIST CONCRETE SIDEWALK TO BE DEMOLISHED
3. EXIST CONCRETE DRIVEWAY TO BE DEMOLISHED
4. EXIST CONCRETE RAMPS TO BE DEMOLISHED
5. EXIST ASPHALT/CONCRETE PAVEMENT TO BE DEMOLISHED
6. EXIST 108 LF DITCH TO BE FILLED
7. EXIST TREE TO BE REMOVED
8. EXIST GRATE INLET TO BE REMOVED
9. EXIST STORM LINE TO BE REMOVED
10. PROP. FULL-DEPTH SAW CUT FOR DRIVEWAY REMOVAL

DEMOLITION NOTE:

IF ASBESTOS MATERIAL IS FOUND ON SITE, CONTRACTOR SHALL FOLLOW ALL FEDERAL, STATE, LOCAL, AND SPECIFICATIONAL REQUIREMENTS REGARDING DEMOLITION, AND DISPOSAL OF HAZARDOUS MATERIAL AND HAZARDOUS WASTE.

FLOOD PLAIN NOTE:

THE SUBJECT TRACT LIES WITHIN FLOOD ZONE "X"-SHADED AND "X"-UNSHADED , ACCORDING TO FIRM MAP NO. 48157C0235L MAP REVISION: 04/02/2014.

BFE (100-YEAR) = 82.50', BFE (500-YEAR) = 84.75'

BENCHMARK:

PUBLISHED ELEVATION 97.98'

BENCHMARK - N.G.S B-1212 (1973) [PID AW4730] - FOUND BRASS DISK SET VERTICALLY IN NORTH FACE OF FORT BEND COUNTY COURTHOUSE BUILDING AT JACKSON STREET (US 90-A) ENTRANCE DOORS. (NAVD88)

FSGROUP® ARCHITECTS
13105 Northwest Fwy Suite 1110
Houston Texas 77040
713 344 1752 Office
www.fsdesignbuild.com

PROJECT NAME

INFORMATION TECHNOLOGY BUILDING
EUGENE HEIMANN CIRCLE
FORT BEND COUNTY . TEXAS

CONSULTANTS

ISANI CONSULTANTS L.P
ISANI
civil \ design \ engineers
10448 WEST OFFICE DRIVE
HOUSTON, TEXAS 77042
T: (713) 747 2399
F: (713) 747 4797
TBPE FIRM REGISTRATION #4575

ISANI PROJECT NO: 23LD73

PROFESSIONAL SEAL

STATE OF TEXAS
RAM GULIANI
101094
LICENSED
PROFESSIONAL ENGINEER
05/15/2024

ISSUED FOR

ISSUED FOR PROPOSAL AND PERMIT

REVISIONS

No.	DESCRIPTION	DATE

KEY PLAN

SHEET TITLE

DEMOLITION PLAN

SCALE: As indicated

DATE: 05/15/2024

PROJECT NUMBER: 2319

SHEET NUMBER

C1.00

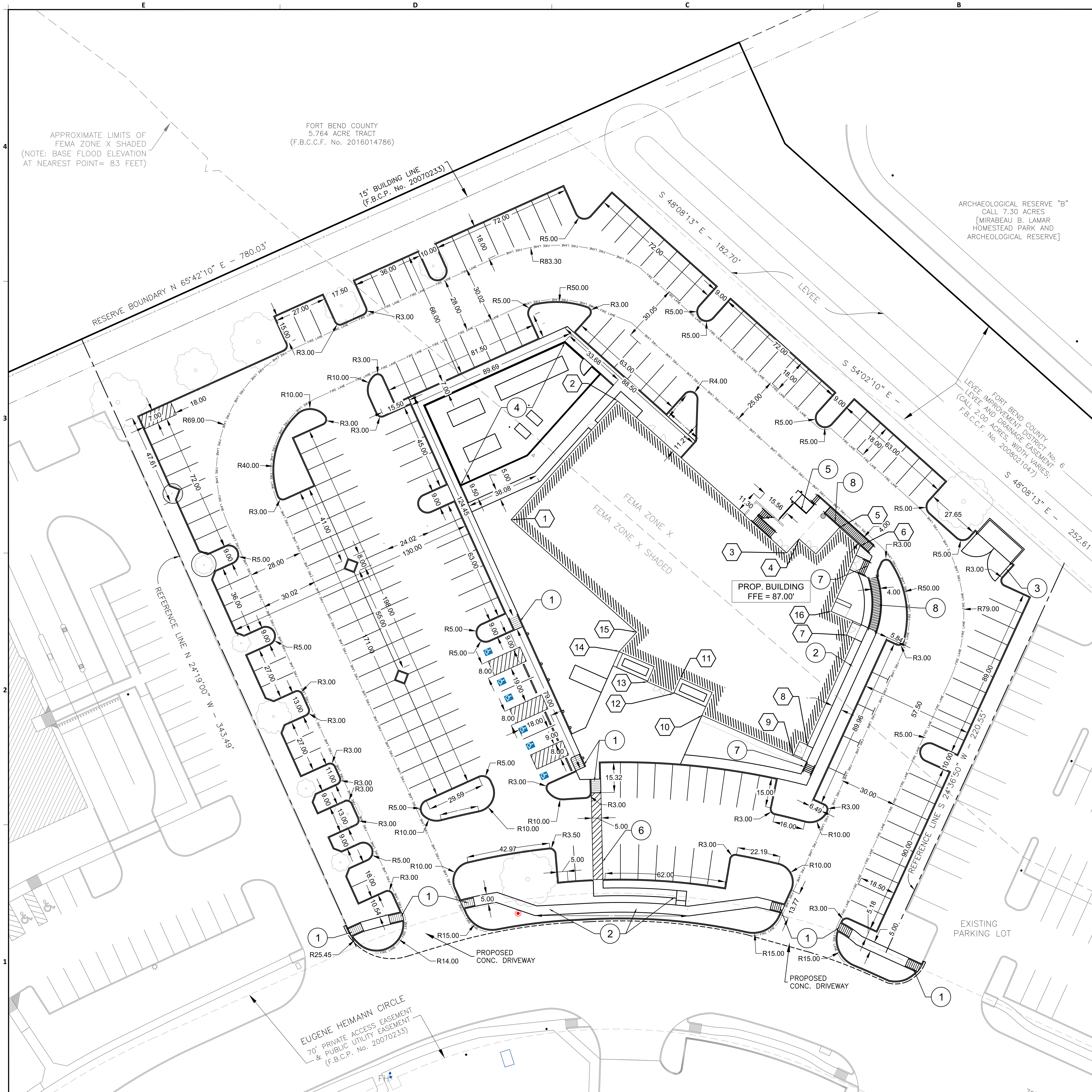

LEGEND EXISTING:

- PROPERTY CORNER
- PP — POWER POLE
- MH — MANHOLE
- CO — CLEANOUT
- WV — WATER VALVE
- FH — FIRE HYDRANT
- WM — WATER METER
- TREE
- CURB LINE
- EDGE ASPHALT
- CURB INLET
- AREA INLET
- EDGE OF BUILDING
- —UGP— UNDERGROUND TELECOM LINE

N W E S

0 20 40 Feet

SCALE 1" = 20'

KEY NOTES

1. PROPOSED A.D.A. RAMP
2. PROPOSED SIDEWALK
3. PROPOSED DUMPSTER ENCLOSURE (REF: STRUCTURAL PLANS FOR DETAILS)
4. PROPOSED MECHANICAL YARD (REF: MEP FOR DETAILS)
5. PROP. LOADING DOCK (REF: ARCH. PLANS FOR DETAILS)
6. PROP. STRIPED AREA FOR A.D.A. ACCESSIBLE ROUTE, TYP.
7. PROP. STEPS (SEE SHEET C3.01 – GRADING PLAN)
7. PROP. RAMP WITH HANDRAILS.

PROPOSED BUILDING CORNERS

POINT	NORTHING	EASTING
1	13773570.68	3000415.14
2	13773631.93	3000470.03
3	13773553.58	3000557.09
4	13773560.76	3000563.52
5	13773566.70	3000584.35
6	13773557.27	3000595.10
7	13773511.25	3000587.97
8	13773454.39	3000567.74
9	13773449.12	3000560.38
10	13773469.88	3000513.45
11	13773488.97	3000502.32
12	13773481.50	3000499.13
13	13773487.52	3000485.52
14	13773502.71	3000470.77
15	13773512.76	3000479.78
16	13773523.52	3000579.96

FLOOD PLAIN NOTE:

THE SUBJECT TRACT LIES WITHIN FLOOD ZONE "X"-SHADED AND "X"-UNSHADED , ACCORDING TO FIRM MAP NO. 48157C0235L MAP REVISION: 04/02/2014.

BFE (100-YEAR) = 82.50', BFE (500-YEAR) = 84.75'

BENCHMARK:

PUBLISHED ELEVATION 97.98'

BENCHMARK - N.G.S B-1212 (1973) [PID AW4730] - FOUND BRASS DISK SET VERTICALLY IN NORTH FACE OF FORT BEND COUNTY COURTHOUSE BUILDING AT JACKSON STREET (US 90-A) ENTRANCE DOORS. (NAVD88)

FSGROUP® ARCHITECTS
13105 Northwest Fwy Suite 1110
Houston Texas 77040
713 344 1752 Office
www.fsdesignbuild.com

PROJECT NAME

THE STATE OF TEXAS · FORT BEND COUNTY

INFORMATION TECHNOLOGY BUILDING
EUGENE HEIMANN CIRCLE
FORT BEND COUNTY . TEXAS

CONSULTANTS

ISANI CONSULTANTS L.P
ISANI
civil \ design \ engineers
10448 WEST OFFICE DRIVE
HOUSTON, TEXAS 77042
T: (713) 747 2399
F: (713) 747 4797
TBPE FIRM REGISTRATION #4575

ISANI PROJECT NO: 23LD73

PROFESSIONAL SEAL

STATE OF TEXAS · RAM GULIANI · 101094 · LICENSED PROFESSIONAL ENGINEER
05/15/2024

ISSUED FOR

ISSUED FOR PROPOSAL AND PERMIT

REVISIONS

No.	DESCRIPTION	DATE

KEY PLAN

SHEET TITLE

SITE PLAN

SCALE	As indicated
DATE	05/15/2024
PROJECT NUMBER	2319
SHEET NUMBER	C2.00

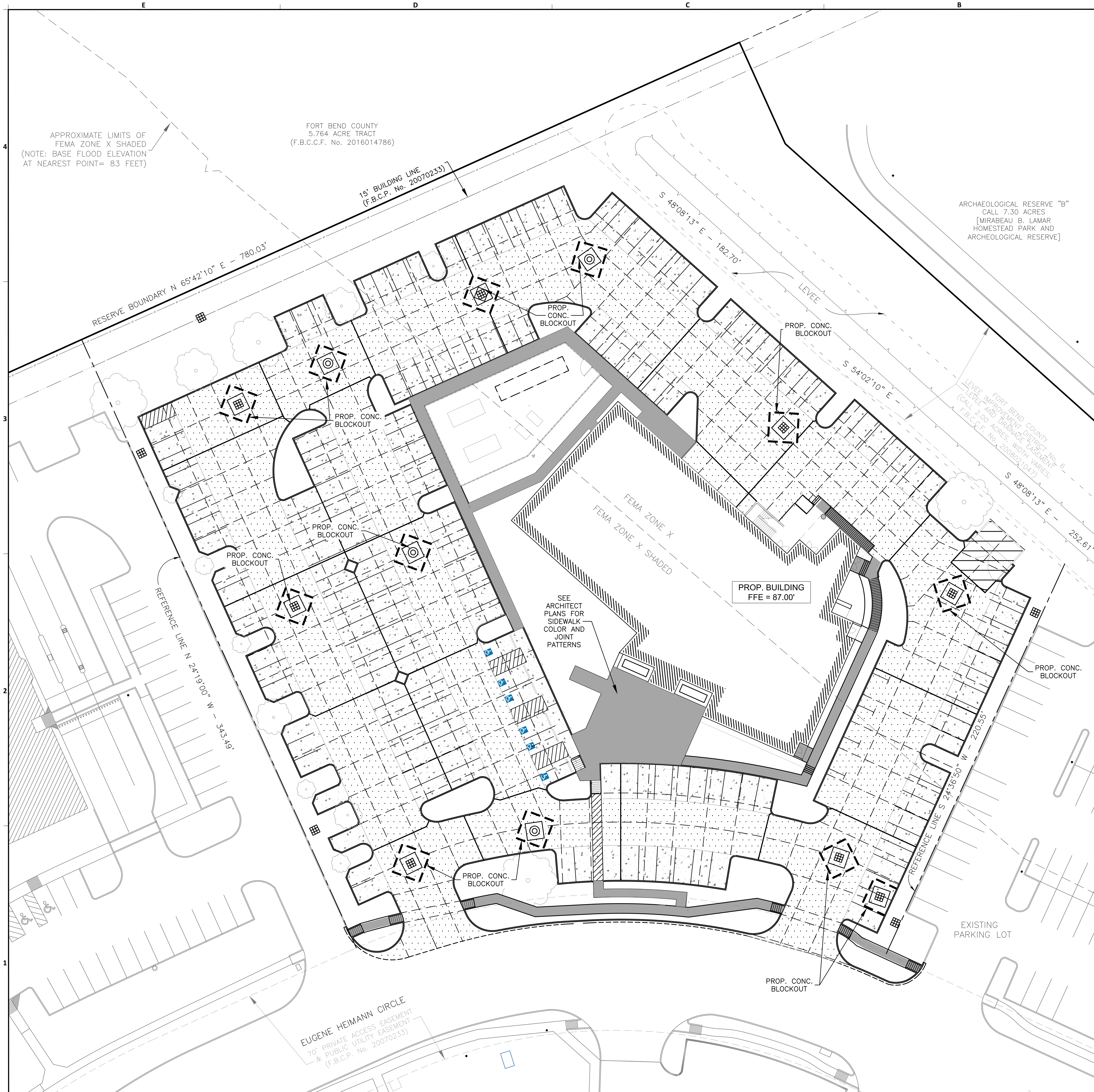

SCALE 1" = 20'

PROPOSED LEGEND:

- PROP. 5" CONCRETE PAVEMENT
- PROP. 6" CONCRETE PAVEMENT
- PROP. 7" CONCRETE PAVEMENT
- PROP. 4 ½" CONCRETE SIDEWALK
- PROP. CONCRETE BLOCKOUT
- PROP. EXPANSION JOINT
- PROP. CONTROL JOINT
- PROP. ISOLATION JOINT

FLOOD PLAIN NOTE:

THE SUBJECT TRACT LIES WITHIN FLOOD ZONE "X"-SHADED AND "X"-UNSHADED , ACCORDING TO FIRM MAP NO. 48157C0235L MAP REVISION: 04/02/2014.

BFE (100-YEAR) = 82.50', BFE (500-YEAR) = 84.75'

BENCHMARK:

PUBLISHED ELEVATION 97.98'
BENCHMARK - N.G.S B-1212 (1973) [PID AW4730] - FOUND BRASS DISK SET VERTICALLY IN NORTH FACE OF FORT BEND COUNTY COURTHOUSE BUILDING AT JACKSON STREET (US 90-A) ENTRANCE DOORS. (NAVD88)

FSGROUP ARCHITECTS
13105 Northwest Fwy Suite 1110
Houston Texas 77040
713 344 1752 Office
www.fsdesignbuild.com

PROJECT NAME

THE STATE OF TEXAS FORT BEND COUNTY

INFORMATION TECHNOLGY BUILDING
EUGENE HEIMANN CIRCLE
FORT BEND COUNTY . TEXAS

CONSULTANTS

ISANI CONSULTANTS L.P
civil \ design \ engineers
10448 WEST OFFICE DRIVE
HOUSTON, TEXAS 77042
T: (713) 747 2399
F: (713) 747 4797
TBPE FIRM REGISTRATION #4575

ISANI PROJECT NO: 23LD73

PROFESSIONAL SEAL

STATE OF TEXAS
RAM GULIANI
101094
LICENSED PROFESSIONAL ENGINEER
05/15/2024

ISSUED FOR

ISSUED FOR PROPOSAL AND PERMIT

REVISIONS

No.	DESCRIPTION	DATE

KEY PLAN

SHEET TITLE

PAVEMENT PLAN

SCALE: As indicated

DATE: 05/15/2024

PROJECT NUMBER: 2319

SHEET NUMBER

C3.00

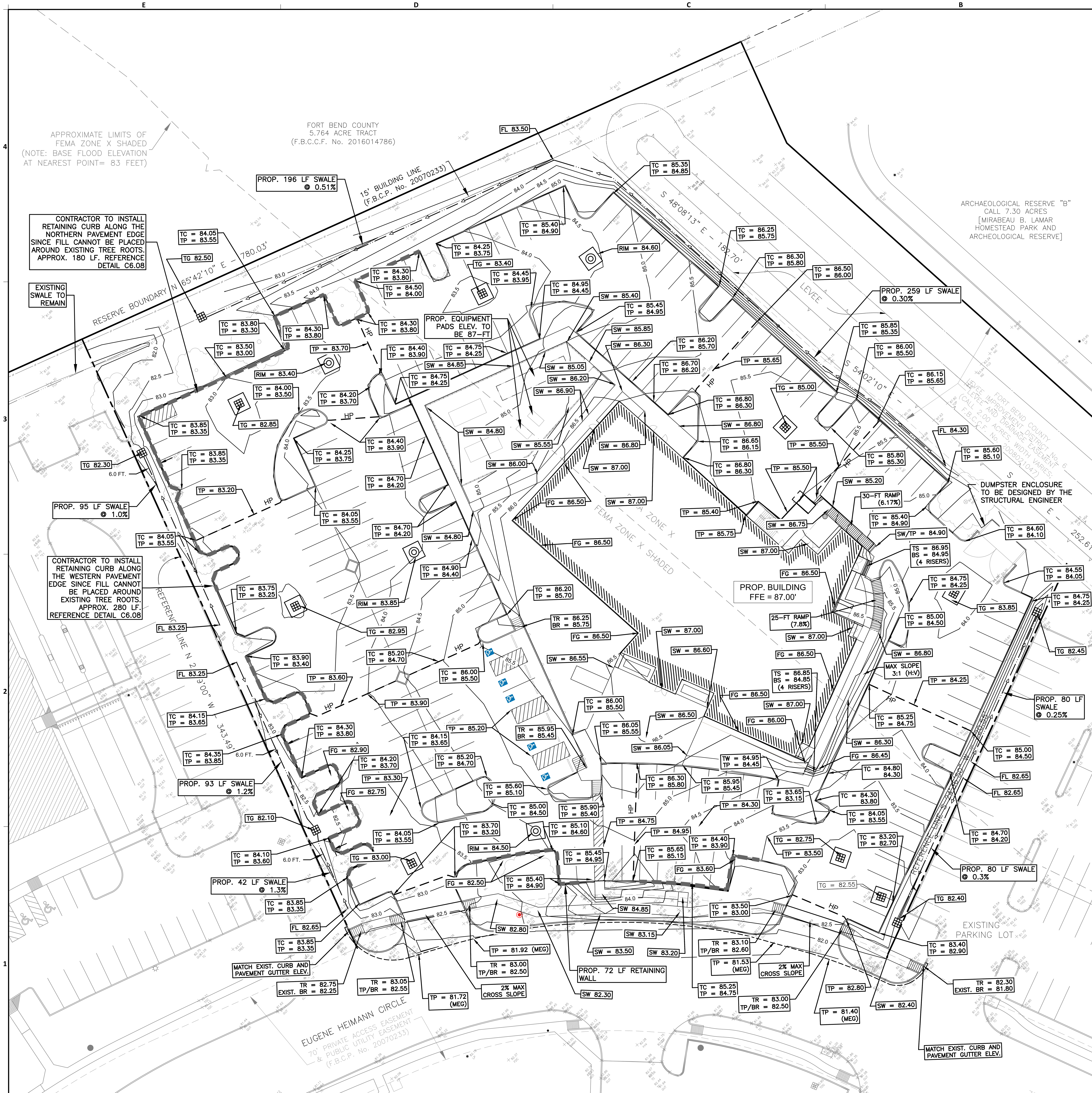

LEGEND EXISTING:

PROPERTY CORNER
PP POWER POLE
MH MANHOLE
CO CLEANOUT
WV WATER VALVE
FH FIRE HYDRANT
WM WATER METER
TREE
CURB LINE
EDGE ASPHALT
CURB INLET
AREA INLET
EDGE OF BUILDING
UGP OVERHEAD ELECTRIC
SAN SANITARY SEWER LINE
STM STORM SEWER LINE
W WATERLINE
UGT UNDERGROUND TELECOM LINE

N W E S

0 20 40 Feet

SCALE 1" = 20'

LEGEND PROPOSED:

JUNCTION BOX W/ GRATE INLET TOP
JUNCTION BOX
INLET
STM STORM PIPE
STORM CLEANOUT
PROPOSED SWALE
EXISTING SWALE
RETAINING CURB OR RETAINING WALL

TP	TOP OF PAVEMENT
TC	TOP OF CURB
TG	TOP OF GRATE
TR	TOP OF RAMP
SW	TOP OF SIDEWALK
MEG	MATCH EXISTING GRADE
HP	HIGH POINT
BR	BACK OF RAMP
TS	TOP OF STEP
BS	BOTTOM OF STEP
FG	FINISH GRADE
MEG	MATCH EXISTING GRADE
RIM	STORM JUNCTION BOX RIM

FLOOD PLAIN NOTE:

THE SUBJECT TRACT LIES WITHIN FLOOD ZONE "X"-SHADED AND "X"-UNSHADED, ACCORDING TO FIRM MAP NO. 48157C0235L MAP REVISION: 04/02/2014.

BFE (100-YEAR) = 82.50', BFE (500-YEAR) = 84.75'

BENCHMARK:

PUBLISHED ELEVATION 97.98'
BENCHMARK – N.G.S B-1212 (1973) [PID AW4730] – FOUND BRASS DISK SET VERTICALLY IN NORTH FACE OF FORT BEND COUNTY COURTHOUSE BUILDING AT JACKSON STREET (US 90-A) ENTRANCE DOORS. (NAVD88)

FSGROUP ARCHITECTS
13105 Northwest Fwy Suite 1110
Houston Texas 77040
713 344 1752 Office
www.fsdesignbuild.com

PROJECT NAME

THE STATE OF TEXAS FORT BEND COUNTY

INFORMATION TECHNOLOGY BUILDING
EUGENE HEIMANN CIRCLE
FORT BEND COUNTY, TEXAS

CONSULTANTS

ISANI CONSULTANTS L.P
ISANI
civil \ design \ engineers
10448 WEST OFFICE DRIVE
HOUSTON, TEXAS 77042
T: (713) 747 2399
F: (713) 747 4797
TBPE FIRM REGISTRATION #4575
ISANI PROJECT NO: 23LD73

PROFESSIONAL SEAL

STATE OF TEXAS
RAM GULIANI
101094
LICENSED
PROFESSIONAL ENGINEER
05/15/2024

ISSUED FOR

ISSUED FOR PROPOSAL AND PERMIT

REVISIONS

No.	DESCRIPTION	DATE

KEY PLAN

SHEET TITLE

GRADING PLAN

SCALE: As indicated

DATE: 05/15/2024

PROJECT NUMBER: 2319

SHEET NUMBER

C3.01

LEGEND EXISTING:

	PROPERTY CORNER
PP	POWER POLE
MH	MANHOLE
CO	CLEANOUT
WV	WATER VALVE
FH	FIRE HYDRANT
WM	WATER METER
	TREE
	CURB LINE
	EDGE ASPHALT
	CURB INLET
	AREA INLET
	EDGE OF BUILDING
UGP	OVERHEAD ELECTRIC
SAN	SANITARY SEWER LINE
STM	STORM SEWER LINE
W	WATERLINE
UGT	UNDERGROUND TELECOM LINE

N W E S

0 20 40 Feet

SCALE 1" = 20'

LEGEND:

TP	TOP OF PAVEMENT
TC	TOP OF CURB
TG	TOP OF GRATE
TR	TOP OF RAMP
SW	TOP OF SIDEWALK
MEG	MATCH EXISTING GRADE
HP	HIGH POINT
BR	BACK OF RAMP
TS	TOP OF STEP
BS	BOTTOM OF STEP
FG	FINISH GRADE

PROPOSED LEGEND:

	DRAINAGE AREA BOUNDARY
	JUNCTION BOX W/ GRATE INLET
	JUNCTION BOX
XX AC	CUMULATIVE AREA
XX cfs	CUMULATIVE 2-YR FLOW
XX	DRAINAGE AREA IN ACRES
STM	PROP. STORM LINE

FLOOD PLAIN NOTE:

THE SUBJECT TRACT LIES WITHIN FLOOD ZONE "X"–SHADED AND "X"–UNSHADED , ACCORDING TO FIRM MAP NO. 48157C0235L MAP REVISION: 04/02/2014.

BFE (100–YEAR) = 82.50', BFE (500–YEAR) = 84.75'

BENCHMARK:

PUBLISHED ELEVATION 97.98'
BENCHMARK – N.G.S B–1212 (1973) [PID AW4730] – FOUND BRASS DISK SET VERTICALLY IN NORTH FACE OF FORT BEND COUNTY COURTHOUSE BUILDING AT JACKSON STREET (US 90–A) ENTRANCE DOORS. (NAVD88)

FSGROUP® ARCHITECTS
13105 Northwest Fwy Suite 1110
Houston Texas 77040
713 344 1752 Office
www.fsdesignbuild.com

PROJECT NAME

THE STATE OF TEXAS · FORT BEND COUNTY

INFORMATION TECHNOLOGY BUILDING
EUGENE HEIMANN CIRCLE
FORT BEND COUNTY . TEXAS

CONSULTANTS
ISANI CONSULTANTS L.P
ISANI
civil \ design \ engineers
10448 WEST OFFICE DRIVE
HOUSTON, TEXAS 77042
T: (713) 747 2399
F: (713) 747 4797
TBPE FIRM REGISTRATION #4575
ISANI PROJECT NO: 23LD73

PROFESSIONAL SEAL

STATE OF TEXAS · RAM GULIANI · 101094 · LICENSED PROFESSIONAL ENGINEER

05/15/2024

ISSUED FOR
ISSUED FOR PROPOSAL AND PERMIT

REVISIONS

No.	DESCRIPTION	DATE

KEY PLAN

SHEET TITLE
DRAINAGE AREA MAP

SCALE As indicated

DATE 05/15/2024

PROJECT NUMBER 2319

SHEET NUMBER
C3.02

STORM SEWER CALCULATION FORM

PROJECT: FBC IT BUILDING — **2YR** C Factor

PROJ. NO. 23LD73 — "b" 45.19 — 1

PREPARED BY: TM DATE: 4/17/2024 — "d" 8.51

CHECKED BY: JM DATE: 4/17/2024 — "e" 0.7122

FILENAME: STORM CALCS

LINE	INLET FROM	INLET TO	AREA INCR ac.	AREA TOTAL ac.	"C" (AVG INCR)	"CA" (AVG TOTAL)	"TC" min.	"I"	Q cfs	REACH FT	LINE SIZE, IN.	LINE SLOPE %	"N"	DESIGN Q cfs	DESIGN V fps	FALL FT	OTHER LOSS FT	FLOWLINE UPSTM	FLOWLINE DNSTM	ACT V fps	HYD GRAD %	H	ELEV HYD GRAD UPSTM	ELEV HYD GRAD DNSTM	TOP OF PIPE DNSTM	G. ELEV. UPSTM	G. ELEV. DNSTM
A	1	1A	0.52	0.52	0.8	0.42	23.91	3.79	1.58	81	78	0.10	0.021	102.86	3.1	0.08	0	72.68	72.59	0.05	2.3E-05	1.9E-05	79.09	79.09	79.09	83.40	83.40
A	1A	2	0.00	0.52	0.8	0.42	23.91	3.79	1.58	45	78	0.10	0.021	102.86	3.1	0.05	0	72.59	72.55	0.05	2.3E-05	1.1E-05	79.05	79.05	79.05	83.40	82.85
A	2	3	0.33	0.85	0.8	0.68	24.72	3.73	2.54	102	78	0.10	0.021	102.86	3.1	0.10	0	72.55	72.45	0.08	6.1E-05	6.2E-05	78.95	78.95	78.95	82.85	82.95
A	3	4	0.51	1.36	0.8	1.09	25.56	3.66	3.98	140	78	0.10	0.021	102.86	3.1	0.14	0	72.45	72.31	0.12	1.5E-04	2.1E-04	78.81	78.81	78.81	82.95	83.00
A	4	4A	0.53	1.89	0.8	1.51	26.19	3.61	5.46	60	78	0.10	0.021	102.86	3.1	0.06	0	72.31	72.25	0.16	2.8E-04	1.7E-04	78.75	78.75	78.75	83.00	84.50
A	4A	7	0.00	1.91	0.8	1.53	26.20	3.61	5.51	151	78	0.10	0.021	102.86	3.1	0.15	0	72.25	72.10	0.17	2.9E-04	4.3E-04	78.60	78.60	78.60	84.50	82.75
B	6A	6	0.16	0.49	0.8	0.40	23.83	3.80	1.50	117	78	0.10	0.021	102.86	3.1	0.12	0	72.36	72.24	0.05	2.1E-05	2.5E-05	78.74	78.74	78.74	85.00	83.85
B	6	7	0.29	0.81	0.8	0.65	24.64	3.73	2.42	142	78	0.10	0.021	102.86	3.1	0.14	0	72.24	72.10	0.07	5.5E-05	7.9E-05	78.60	78.60	78.60	83.85	82.75
C	7	8	0.39	3.11	0.8	2.49	27.21	3.54	8.80	24	78	0.12	0.021	112.67	3.4	0.03	0	72.10	72.07	0.27	7.3E-04	1.8E-04	78.57	78.57	78.57	82.75	83.15
C	8	Ex. Curb Inlet	0	3.11	0.8	2.49	27.21	3.54	8.80	34	24	0.20	0.013	10.14	3.2	0.07	0	72.07	72.00	2.80	0.1508	0.051	74.05	74.00	74.00	83.15	81.10

STORM SEWER CALCULATION FORM

PROJECT: FBC IT BUILDING — **100YR** C Factor

PROJ. NO. 23LD73 — "b" 42.99 — 1

PREPARED BY: TM DATE: 4/17/2024 — "d" 1.08

CHECKED BY: JM DATE: 4/17/2024 — "e" 0.5274

FILENAME: STORM CALCS

LINE	INLET FROM	INLET TO	AREA INCR ac.	AREA TOTAL ac.	"C" (AVG INCR)	"CA" (AVG TOTAL)	"TC" min.	"I"	Q cfs	REACH FT	LINE SIZE, IN.	LINE SLOPE %	"N"	DESIGN Q cfs	DESIGN V fps	FALL FT	OTHER LOSS FT	FLOWLINE UPSTM	FLOWLINE DNSTM	ACT V fps	HYD GRAD %	H	ELEV HYD GRAD UPSTM	ELEV HYD GRAD DNSTM	TOP OF PIPE DNSTM	G. ELEV. UPSTM	G. ELEV. DNSTM
A	1	1A	0.52	0.52	0.8	0.42	23.91	7.87	3.27	81	78	0.10	0.021	102.86	3.1	0.08	0	72.68	72.59	0.10	1.0E-04	8.2E-05	83.14	83.14	79.09	83.40	83.35
A	1A	2	0.00	0.52	0.8	0.42	23.91	7.87	3.27	45	78	0.10	0.021	102.86	3.1	0.05	0	72.59	72.55	0.10	1.0E-04	4.6E-05	83.14	83.14	79.05	83.35	82.85
A	2	3	0.33	0.85	0.8	0.68	24.72	7.74	5.26	102	78	0.10	0.021	102.86	3.1	0.10	0	72.55	72.45	0.16	2.6E-04	2.7E-04	83.14	83.13	78.95	82.85	82.85
A	3	4	0.51	1.36	0.8	1.09	25.56	7.61	8.28	140	78	0.10	0.021	102.86	3.1	0.14	0	72.45	72.31	0.25	6.5E-04	9.1E-04	83.13	83.13	78.81	82.85	82.95
A	4	4A	0.53	1.89	0.8	1.51	26.19	7.52	11.37	60	78	0.10	0.021	102.86	3.1	0.06	0	72.31	72.25	0.34	1.2E-03	7.3E-04	83.13	83.13	78.75	82.95	84.47
A	4A	7	0.00	1.89	0.8	1.51	26.19	7.52	11.37	151	78	0.10	0.021	102.86	3.1	0.15	0	72.25	72.10	0.34	1.2E-03	1.8E-03	83.13	83.13	78.60	84.47	82.75
																							83.13				
B	6A	6	0.16	0.49	0.8	0.40	23.83	7.89	3.12	117	78	0.10	0.021	102.86	3.1	0.12	0	72.36	72.24	0.09	9.2E-05	1.1E-04	83.13	83.13	78.74	84.60	83.55
B	6	7	0.47	0.97	0.8	0.77	24.94	7.71	5.96	142	78	0.10	0.021	102.86	3.1	0.14	0	72.24	72.10	0.18	3.4E-04	4.8E-04	83.13	83.13	78.60	83.55	82.75
																							83.13				
C	7	Inlet	0.39	3.25	0.8	2.60	27.30	7.36	19.11	24	78	0.12	0.021	112.67	3.4	0.03	0	72.10	72.07	0.58	3.5E-03	8.3E-04	83.13	83.13	78.57	82.75	83.00
C	Inlet	TIEIN_inlet	0.00	3.25	0.8	2.60	27.30	7.36	19.11	34	24	0.20	0.021	6.28	2.0	0.07	0	72.07	72.00	6.09	1.8544	0.630	83.13	82.50	74.00	83.00	81.40
																							82.5				

DETENTION SUMMARY:

DETENTION FOR THIS SITE (3.107 ACRES) WAS PROVIDED IN A REGIONAL DETENTION POND CONSTRUCTED AROUND 2013. THE DETENTION POND IS LOCATED ALONG RABBS BAYOU NEAR THE INTERSECTION OF GOLFVIEW DRIVE AND PAR LANE ABOUT 0.40 MILES SOUTH OF THE SITE. THE DRAINAGE STUDY "DRAINAGE IMPACT INVESTIGATION OF THE PROPOSED FORT BEND COUNTY JUSTICE CENTER AND NEARBY ROADWAY IMPROVEMENTS, FORT BEND COUNT, TEXAS" WAS PERFORMED BY CIVIL SYSTEMS ENGINEERING, INC. THE ORIGINAL REPORT IS DATED 05/20/2021, AND WAS UPDATED. ADDITIONAL DETENTION FOR THE FORT BEND IT BUILDING SITE IS REQUIRED TO OFFSET THE DIFFERENCE BETWEEN PREVIOUS DESIGN CRITERIA AND CURRENT DESIGN CRITERIA.

-PREVIOUS DESIGN CRITERIA

SITE DESIGNATED AS COMMERCIAL RESERVE.

C = 1.25 X 0.71 = 0.888
INTENSITY-100 YR = 9.277 IN/HR
Q-100 YR = 0.888 X 9.277 X 3.107= 25.60 CFS

-CURRENT DESING CRITERIA

C= 1.25 X 0.71 = 0.888
INTENSITY-100 YR = 12.091 IN/HR
Q-100 YR = 0.888 X 12.091 X 3.107 = 33.36 CFS

DETENTION SUMMARY:

USING THE SMALL WATERSHED HYDROGRAPH METHODOLOGY (FORT BEND COUNTY DRAINAGE DISTRICT DRAINAGE CRITERIA MANUAL (REVISED 2011) SECTION 2.5 "HYDROGRAPH DEVELOPMENT FOR SMALL WATERSHEDS", THE DETENTION REQUIRED FOR THE SITE TO OFFSET THE THE DIFFERENCE BETWEEN THE PREVIOUS DESIGN CRITERIA AND THE CURRENT DESIGN CRITERIA IS 1.01 ACRE FEET OF DETENTION

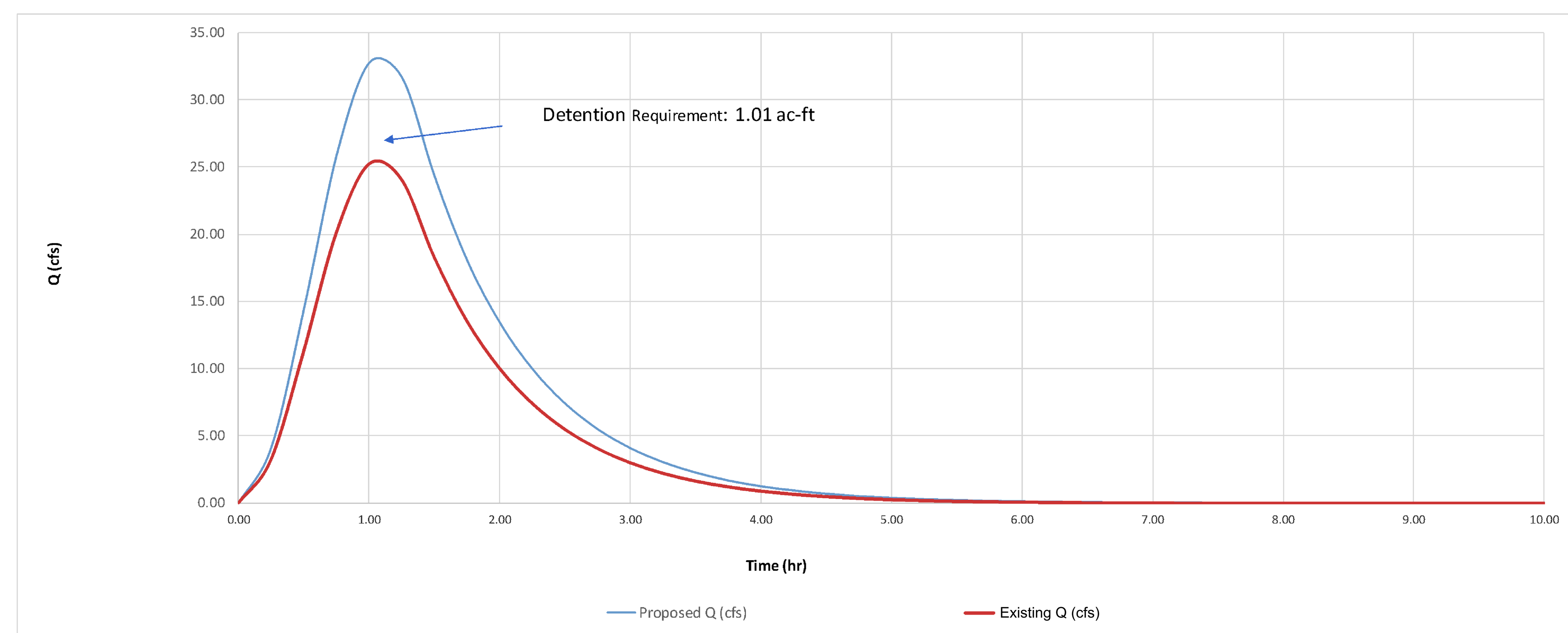

HYDROGRAPH

FSGROUP® ARCHITECTS
13105 Northwest Fwy Suite 1110
Houston Texas 77040
713 344 1752 Office
www.fsdesignbuild.com

PROJECT NAME

INFORMATION TECHNOLOGY BUILDING
EUGENE HEIMANN CIRCLE
FORT BEND COUNTY . TEXAS

CONSULTANTS

ISANI CONSULTANTS L.P
ISANI
civil \ design \ engineers
10448 WEST OFFICE DRIVE
HOUSTON, TEXAS 77042
T: (713) 747 2399
F: (713) 747 4797
TBPE FIRM REGISTRATION #4575

ISANI PROJECT NO: 23LD73

PROFESSIONAL SEAL

RAM GULIANI
101094
05/15/2024

ISSUED FOR

ISSUED FOR PROPOSAL AND PERMIT

REVISIONS

No.	DESCRIPTION	DATE

KEY PLAN

SHEET TITLE

DRAINAGE CALCULATIONS

SCALE: As indicated

DATE: 05/15/2024

PROJECT NUMBER: 2319

SHEET NUMBER

C3.03

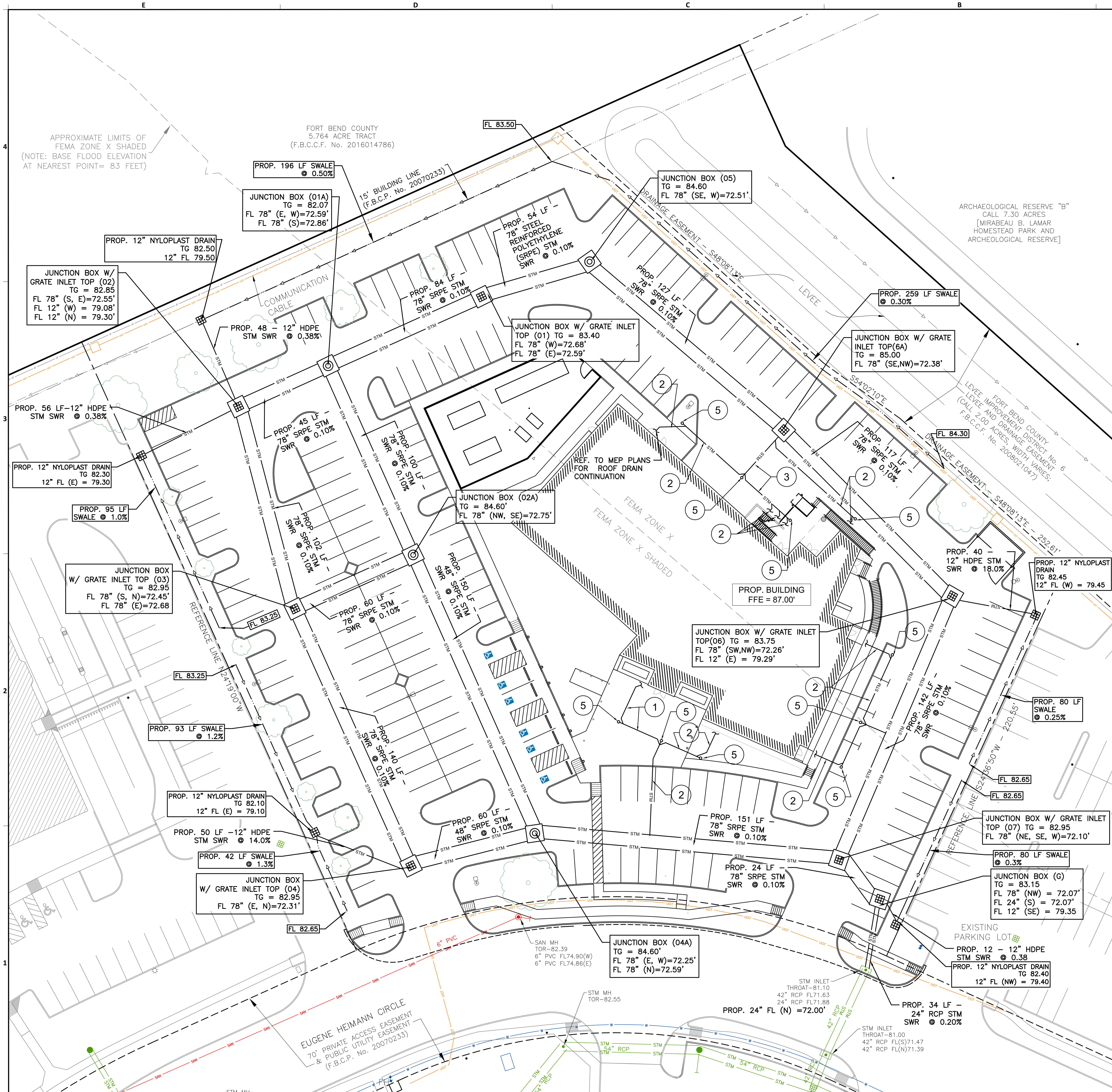

LEGEND EXISTING:

- PROPERTY CORNER
- PP — POWER POLE
- MH — MANHOLE
- CO — CLEANOUT
- WV — WATER VALVE
- FH — FIRE HYDRANT
- WM — WATER METER
- TREE
- CURB LINE
- EDGE ASPHALT
- CURB INLET
- AREA INLET
- EDGE OF BUILDING
- UGP — UNDERGROUND ELECTRIC
- SAN — SANITARY SEWER LINE
- STM — STORM SEWER LINE
- W — WATERLINE
- UGT — UNDERGROUND TELECOM LINE

LEGEND PROPOSED:

- JUNCTION BOX W/ GRATE INLET TOP
- JUNCTION BOX
- INLET
- STM — STORM PIPE
- STORM CLEANOUT
- PROPOSED SWALE
- EXISTING SWALE

STORM KEY NOTES

1. PROPOSED 6" HDPE @ 1.00 (ROOF DRAIN HEADER)
2. PROPOSED 8" HDPE @ 0.65 (ROOF DRAIN HEADER)
3. PROPOSED 12" HDPE @ 0.50 (ROOF DRAIN HEADER)
4. PROPOSED 8" HDPE @ 0.65 (SEE MEP & ARCH. PLANS FOR CONTINUATION)
5. PROPOSED CLEANOUT

DETENTION NOTE–

DETENTON REQUIRED FOR PROJECT IS 1.01 ACRE–FT

–PROPOSED STORM PIPES HAVE BEEN OVERSIZED TO PROVIDE DETENTION REQUIRED

–SEE DRAINAGE CALCULATIONS SHEET C3.03

NOTE–

STORM PIPE LENGTHS ARE MEASURED TO THE INSIDE OF STORM STRUCTURES

FLOOD PLAIN NOTE:

THE SUBJECT TRACT LIES WITHIN FLOOD ZONE "X"–SHADED AND "X"–UNSHADED , ACCORDING TO FIRM MAP NO. 48157C0235L MAP REVISION: 04/02/2014.

BFE (100–YEAR) = 82.50', BFE (500–YEAR) = 84.75'

BENCHMARK:

PUBLISHED ELEVATION 97.98'
BENCHMARK – N.G.S B–1212 (1973) [PID AW4730] – FOUND BRASS DISK SET VERTICALLY IN NORTH FACE OF FORT BEND COUNTY COURTHOUSE BUILDING AT JACKSON STREET (US 90–A) ENTRANCE DOORS. (NAVD88)

FSGROUP ARCHITECTS
13105 Northwest Fwy Suite 1110
Houston Texas 77040
713 344 1752 Office
www.fsdesignbuild.com

PROJECT NAME

INFORMATION TECHNOLOGY BUILDING
EUGENE HEIMANN CIRCLE
FORT BEND COUNTY . TEXAS

CONSULTANTS
ISANI CONSULTANTS L.P
ISANI
civil \ design \ engineers
10448 WEST OFFICE DRIVE
HOUSTON, TEXAS 77042
T: (713) 747 2399
F: (713) 747 4797
TBPE FIRM REGISTRATION #4575

ISANI PROJECT NO: 23LD73

PROFESSIONAL SEAL

STATE OF TEXAS
RAM GULIANI
101094
LICENSED PROFESSIONAL ENGINEER
05/15/2024

ISSUED FOR

ISSUED FOR PROPOSAL AND PERMIT

REVISIONS

No.	DESCRIPTION	DATE

KEY PLAN

SHEET TITLE

DRAINAGE PLAN

SCALE: As indicated

DATE: 05/15/2024

PROJECT NUMBER: 2319

SHEET NUMBER

C3.04

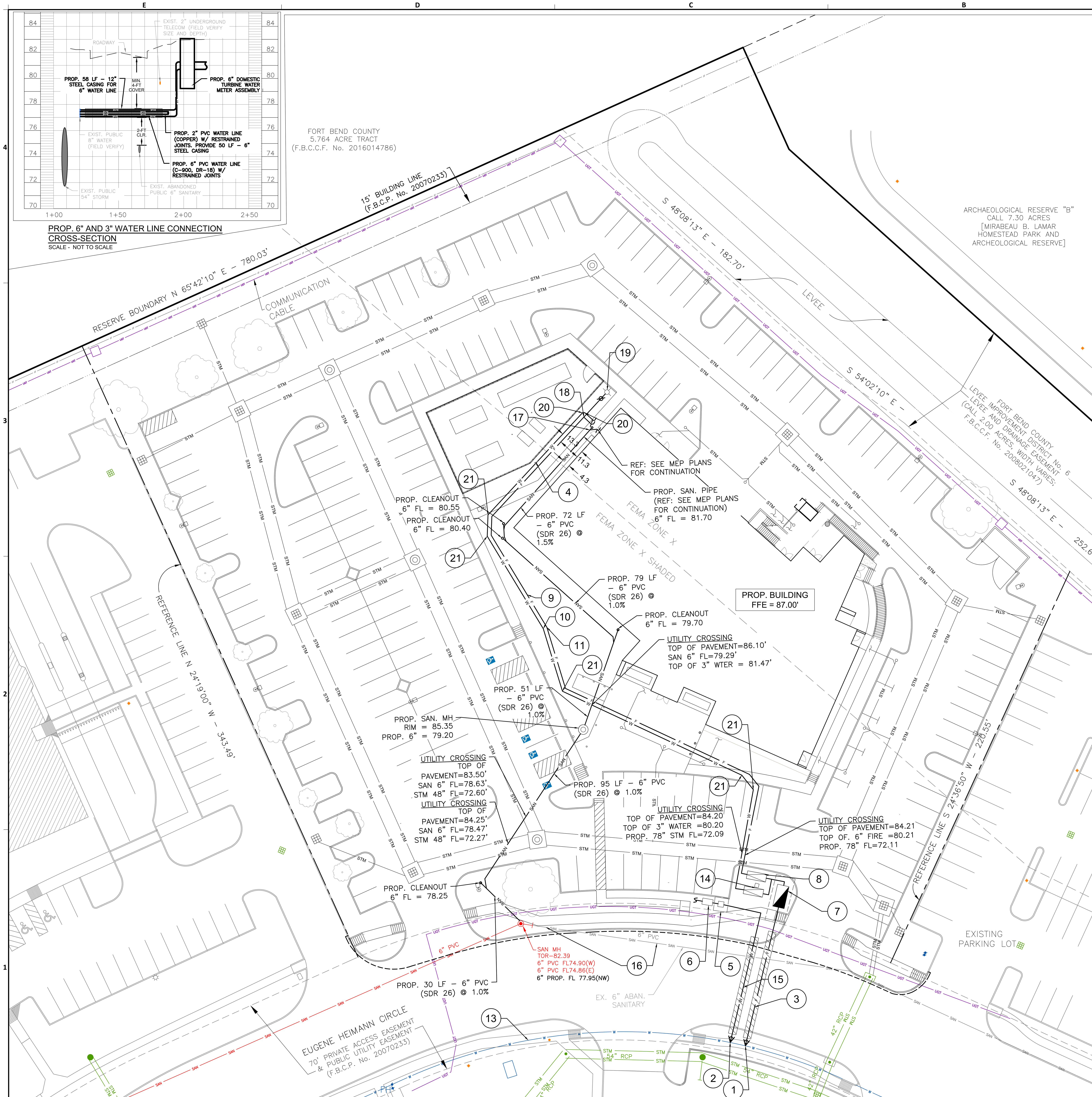

LEGEND EXISTING:

- PROPERTY CORNER
- PP — POWER POLE
- MH — MANHOLE
- CO — CLEANOUT
- WV — WATER VALVE
- FH — FIRE HYDRANT
- WM — WATER METER
- TREE
- CURB LINE
- EDGE ASPHALT
- CURB INLET
- AREA INLET
- EDGE OF BUILDING
- UGP — OVERHEAD ELECTRIC
- SAN — SANITARY SEWER LINE
- STM — STORM SEWER LINE
- W — WATERLINE
- UGT — UNDERGROUND TELECOM LINE

LEGEND PROPOSED:

- MH — SANITARY / STORM MANHOLE
- CO — CLEANOUT
- WV — WATER VALVE
- FH — FIRE HYDRANT
- WM — WATER METER
- CURB LINE
- EDGE ASPHALT
- EDGE OF BUILDING
- SAN — SANITARY SEWER LINE
- STM — STORM SEWER LINE
- W — WATERLINE
- F — FIRELINE
- JUNCTION BOX W/ GRATE INLET TOP
- JUNCTION BOX
- GRATE INLET

UTILITY KEY NOTES

1. PROPOSED 8" X 6" TAPPING SLEEVE & VALVE
2. PROPOSED 8" X 2" TAPPING SADDLE WITH CORPORATION STOP
3. PROPOSED AUGER OF 6" WATER LINE CROSSING THE STREET. PROVIDE 12" STEEL CASING PIPE. SEE CROSS–SECTION ON THIS SHEET
4. PROP. 3" X 2 1/2" REDUCER
5. PROP. 2" IRRIGATION WATER METER W/ 5'X5' EASEMENT
6. PROP. 2" RPZ BACKFLOW PREVENTER (REF: LANDSCAPE PLANS FOR CONTINUATION)
7. PROP. 6" WATER METER W/ 10'X24' WATER METER EASEMENT
8. PROP. 6" RPZ BACKFLOW PREVENTER IN VAULT FOR FIRE LINE
9. PROPOSED 6" PVC (C–900) FIRE WATER LINE
10. PROPOSED 3" ~ 11 ½–DEGREE BEND
11. PROPOSED 6" ~ 11 ½–DEGREE BEND
12. PROPOSED 3" PVC (SCH–40) DOMESTIC WATER LINE
13. EXISTING 8" WATER LINE
14. PROPOSED 3" RPZ BACKFLOW PREVENTER FOR DOMESTIC WATER
15. PROPOSED AUGER OF 2" (TYPE 'K' SOFT COPPER) WATER LINE CROSSING THE STREET. PROVIDE 6" STEEL CASING PIPE. SEE CROSS–SECTION ON THIS SHEET
16. EXISTING PLUG AND ABANDONED 6" SANITARY FROM PREVIOUS PROJECT
17. PROPOSED 6" ~ 90–DEGREE BEND
18. PROPOSED 6" X 6" TEE
19. PROPOSED FIRE HYDRANT
20. PROPOSED 2 1/2" ~ 45–DEGREE BEND
21. PROPOSED 3" ~ 45–DEGREE BEND

FLOOD PLAIN NOTE:

THE SUBJECT TRACT LIES WITHIN FLOOD ZONE "X"-SHADED AND "X"-UNSHADED , ACCORDING TO FIRM MAP NO. 48157C0235L MAP REVISION: 04/02/2014.

BFE (100-YEAR) = 82.50', BFE (500-YEAR) = 84.75'

BENCHMARK:

PUBLISHED ELEVATION 97.98'
BENCHMARK - N.G.S B-1212 (1973) [PID AW4730] - FOUND BRASS DISK SET VERTICALLY IN NORTH FACE OF FORT BEND COUNTY COURTHOUSE BUILDING AT JACKSON STREET (US 90-A) ENTRANCE DOORS. (NAVD88)

FSGROUP® ARCHITECTS
13105 Northwest Fwy Suite 1110
Houston Texas 77040
713 344 1752 Office
www.fsdesignbuild.com

PROJECT NAME

THE STATE OF TEXAS · FORT BEND COUNTY

INFORMATION TECHNOLGY BUILDING
EUGENE HEIMANN CIRCLE
FORT BEND COUNTY . TEXAS

CONSULTANTS

ISANI CONSULTANTS L.P
ISANI
civil \ design \ engineers
10448 WEST OFFICE DRIVE
HOUSTON, TEXAS 77042
T: (713) 747 2399
F: (713) 747 4797
TBPE FIRM REGISTRATION #4575

ISANI PROJECT NO: 23LD73

PROFESSIONAL SEAL

STATE OF TEXAS
RAM GULIANI
101094
LICENSED
PROFESSIONAL ENGINEER
05/15/2024

ISSUED FOR
ISSUED FOR PROPOSAL AND PERMIT

REVISIONS

No.	DESCRIPTION	DATE

KEY PLAN

SHEET TITLE
SITE UTILITY PLAN

SCALE: As indicated
DATE: 05/15/2024
PROJECT NUMBER: 2319
SHEET NUMBER: **C4.00**

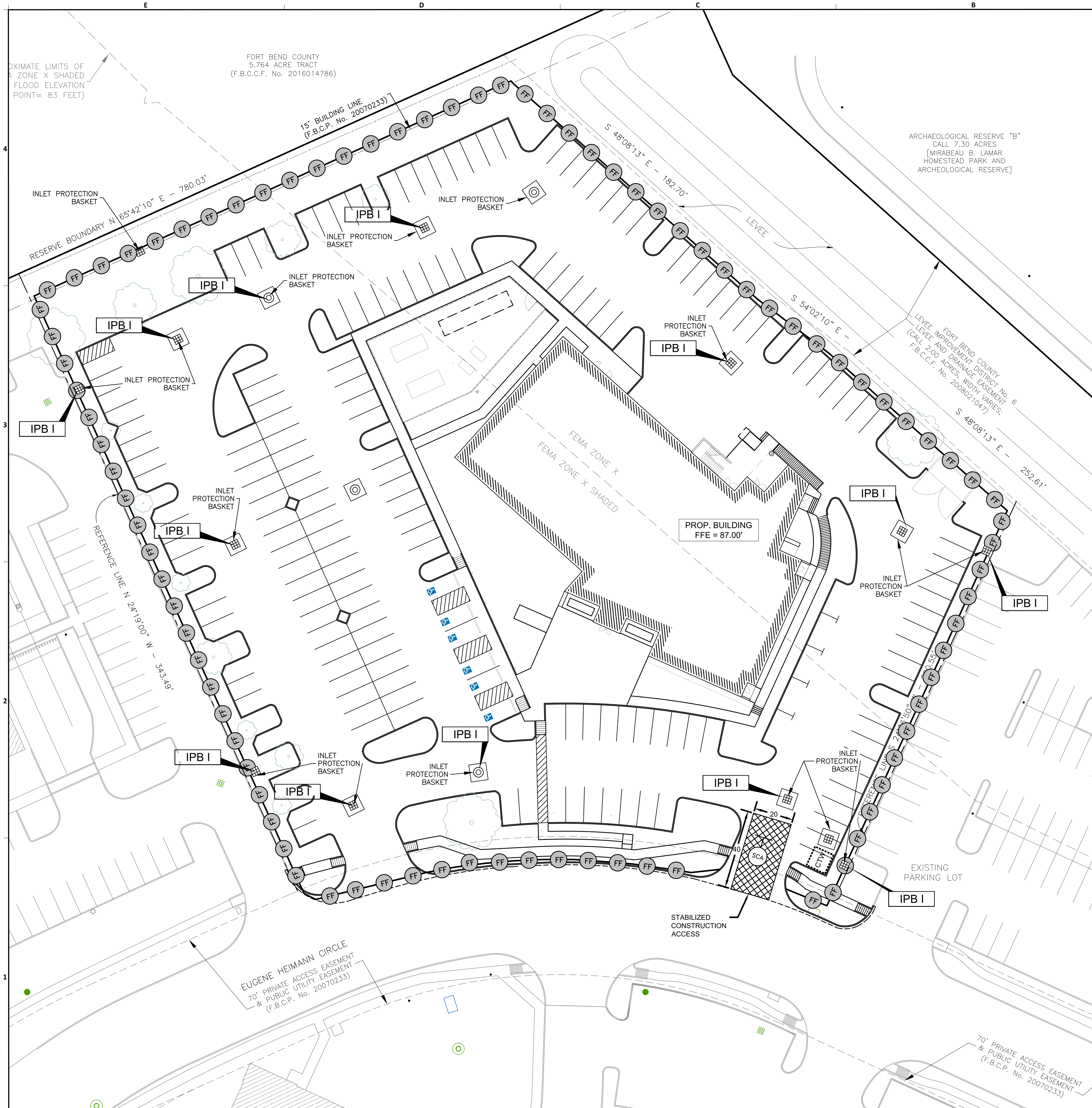

LEGEND PROPOSED:

FF	FILTER FABRIC BARRIER
IPB I & II	INLET PROTECTION BARRIER STAGE 1 & 2
	STABILIZED CONSTRUCTION ACCESS
	GRATE INLET
CTW	CONCRETE TRUCK WASHOUT

FLOOD PLAIN NOTE:

THE SUBJECT TRACT LIES WITHIN FLOOD ZONE "X"–SHADED AND "X"–UNSHADED , ACCORDING TO FIRM MAP NO. 48157C0235L MAP REVISION: 04/02/2014.

BFE (100–YEAR) = 82.50', BFE (500–YEAR) = 84.75'

BENCHMARK:

PUBLISHED ELEVATION 97.98'

BENCHMARK – N.G.S B–1212 (1973) [PID AW4730] – FOUND BRASS DISK SET VERTICALLY IN NORTH FACE OF FORT BEND COUNTY COURTHOUSE BUILDING AT JACKSON STREET (US 90–A) ENTRANCE DOORS. (NAVD88)

FSGROUP® ARCHITECTS
13105 Northwest Fwy Suite 1110
Houston Texas 77040
713 344 1752 Office
www.fsdesignbuild.com

PROJECT NAME

INFORMATION TECHNOLOGY BUILDING
EUGENE HEIMANN CIRCLE
FORT BEND COUNTY . TEXAS

CONSULTANTS

ISANI CONSULTANTS L.P
ISANI
civil \ design \ engineers
10448 WEST OFFICE DRIVE
HOUSTON, TEXAS 77042
T: (713) 747 2399
F: (713) 747 4797
TBPE FIRM REGISTRATION #4575

ISANI PROJECT NO: 23LD73

PROFESSIONAL SEAL

STATE OF TEXAS
RAM GULIANI
101094
LICENSED PROFESSIONAL ENGINEER
05/15/2024

ISSUED FOR

ISSUED FOR PROPOSAL AND PERMIT

REVISIONS

No.	DESCRIPTION	DATE

KEY PLAN

SHEET TITLE

SWPPP PLAN

SCALE: As indicated

DATE: 05/15/2024

PROJECT NUMBER: 2319

SHEET NUMBER

C5.00

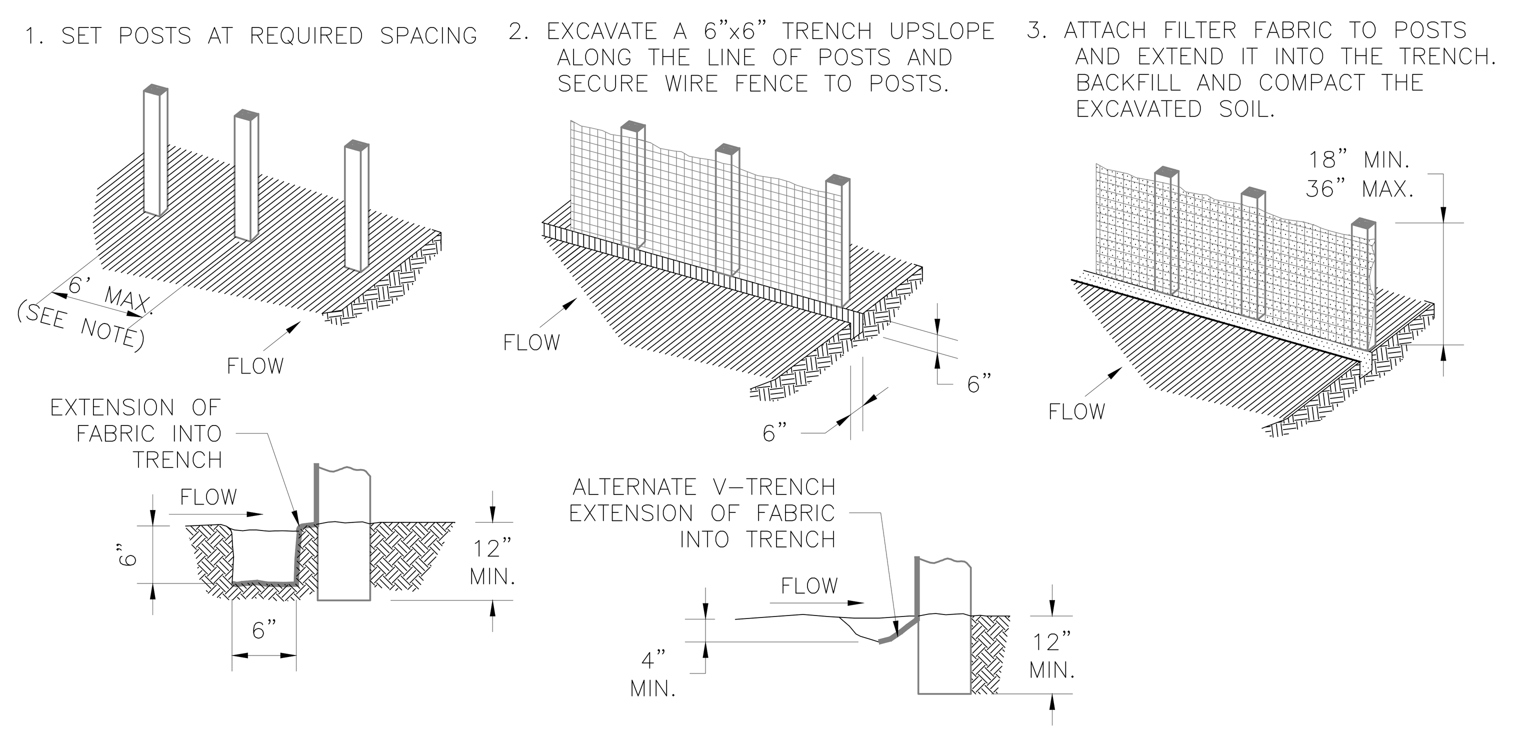

REINFORCED FILTER FABRIC BARRIER

RFB

SYMBOL

GENERAL NOTES:

1. SECURELY FASTEN MESH FENCING TO POSTS WITH STAPLES OR TIE WIRES.
2. SECURELY FASTEN FILTER FABRIC TO MESH FENCING.
3. WHEN TWO SECTIONS OF FILTER FABRIC ADJOIN EACH OTHER, OVERLAP 6 INCHES AT A POST, FOLD TOGETHER, AND ATTACH TO A POST.
4. REMOVE SEDIMENT DEPOSITS WHEN SILT REACHES ONE-THIRD OF THE HEIGHT OF THE FENCE IN DEPTH.

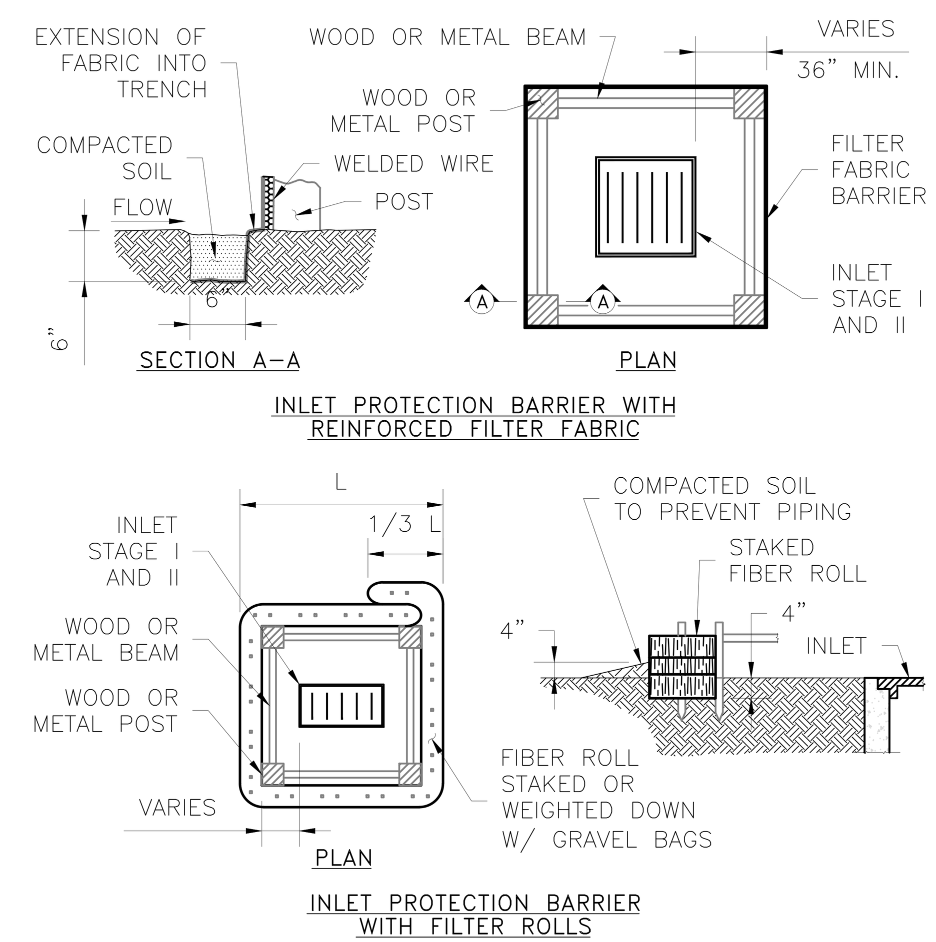

INLET PROTECTION BARRIERS FOR STAGE I INLETS

IPB-I

SYMBOL

GENERAL NOTES:

1. FIBER ROLLS WILL BE UTILIZED ONLY WHEN SITE CONDITIONS DO NOT PERMIT THE USE OF FILTER FABRIC BARRIER, AND AS APPROVED BY THE ENGINEER.

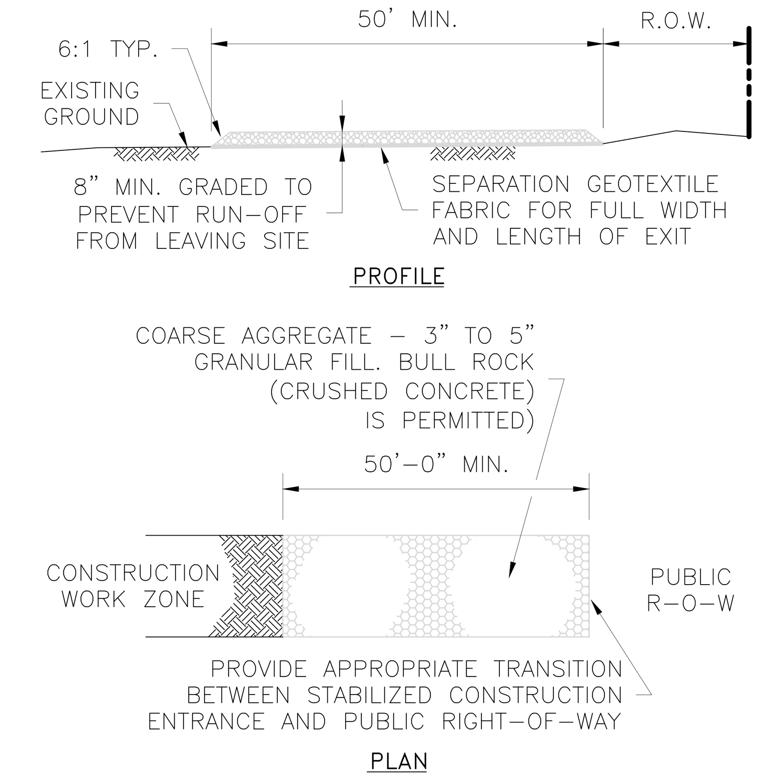

STABILIZED CONSTRUCTION ACCESS

SC-1

SYMBOL

GENERAL NOTES:

1. MINIMUM LENGTH IS AS SHOWN ON CONSTRUCTION DRAWINGS OR 50 FEET, WHICHEVER IS MORE.
2. CONSTRUCT AND MAINTAIN CONSTRUCTION EXIT WITH CONSTANT WIDTH ACROSS ITS LENGTH, INCLUDING ALL POINTS OF INGRESS OR EGRESS.
3. UNLESS SHOWN ON THE CONSTRUCTION DRAWINGS, STABILIZATION FOR OTHER AREAS WILL HAVE THE SAME AGGREGATE THICKNESS AND WIDTH REQUIREMENTS AS THE STABILIZED CONSTRUCTION EXIT.
4. WHEN SHOWN ON THE CONSTRUCTION DRAWINGS, WIDEN OR LENGTHEN STABILIZED AREA TO ACCOMMODATE A TRUCK WASHING AREA. PROVIDE OUTLET SEDIMENT TRAP FOR THE TRUCK WASHING AREA.
5. PROVIDE PERIODIC TOP DRESSING WITH ADDITIONAL COARSE AGGREGATE TO MAINTAIN THE REQUIRED DEPTH OR WHEN SURFACE BECOMES PACKED WITH MUD.
6. PERIODICALLY TURN AGGREGATE TO EXPOSE A CLEAN DRIVING SURFACE.
7. MINIMUM 14' WIDTH FOR ONE WAY TRAFFIC AND 20' WIDTH FOR TWO WAY TRAFFIC.

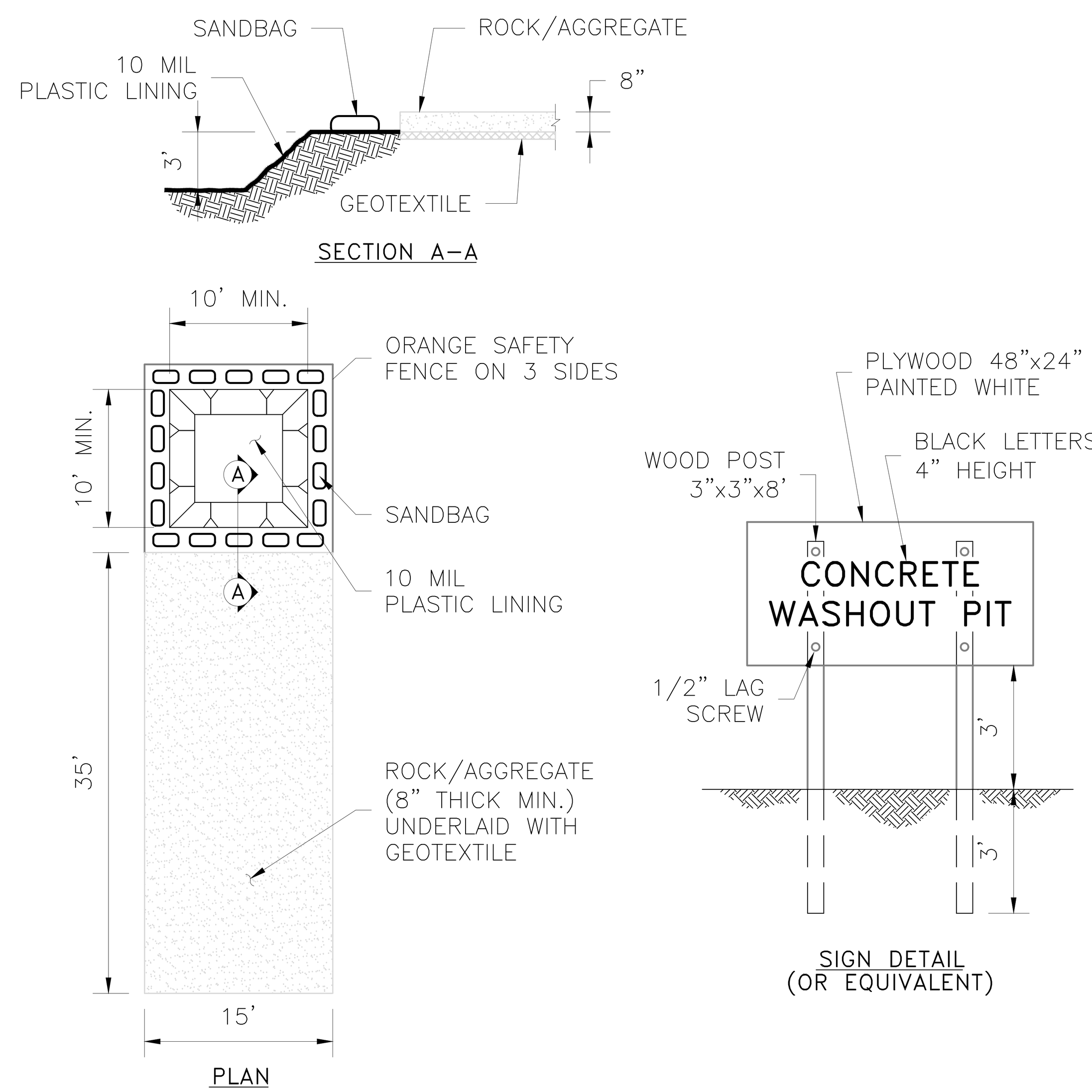

CONCRETE TRUCK WASHOUT AREA

CTW

SYMBOL

GENERAL NOTES:

1. POST A SIGN READING "CONCRETE WASHOUT PIT" NEXT TO THE PIT.
2. VERBALLY INSTRUCT THE CONCRETE TRUCK DRIVERS WHERE THE PIT IS AND TO WASHOUT THEIR TRUCKS IN THE PIT AND NOWHERE ELSE.
3. UPON THE CONCRETE SETTING UP (CURING, DRYING OUT), THE CONCRETE WASTE SHALL BE REMOVED FROM THE PROJECT SITE AND DISPOSED OF PROPERLY BY THE CONTRACTOR. AFTER REMOVAL OF THE CONCRETE WASTE, THE WASHOUT PIT SHALL BE FILLED WITH CLEAN FILL MATERIAL AND COMPACTED TO IN-SITU CONDITIONS, OR AS DIRECTED BY THE PROJECT SPECIFICATIONS.
4. CONCRETE WASHOUT PITS SHALL NOT BE LOCATED DIRECTLY ADJACENT TO, NOR AT ANY TIME DRAIN INTO THE STORM SEWER SYSTEM OR ANY OTHER SWALE, DITCH, OR WATERWAY.
5. CONSTRUCT ENTRY ROAD AND BOTTOM OF WASHOUT AREA TO SUPPORT EXPECTED LOADINGS FROM TRUCKS EQUIPMENT.

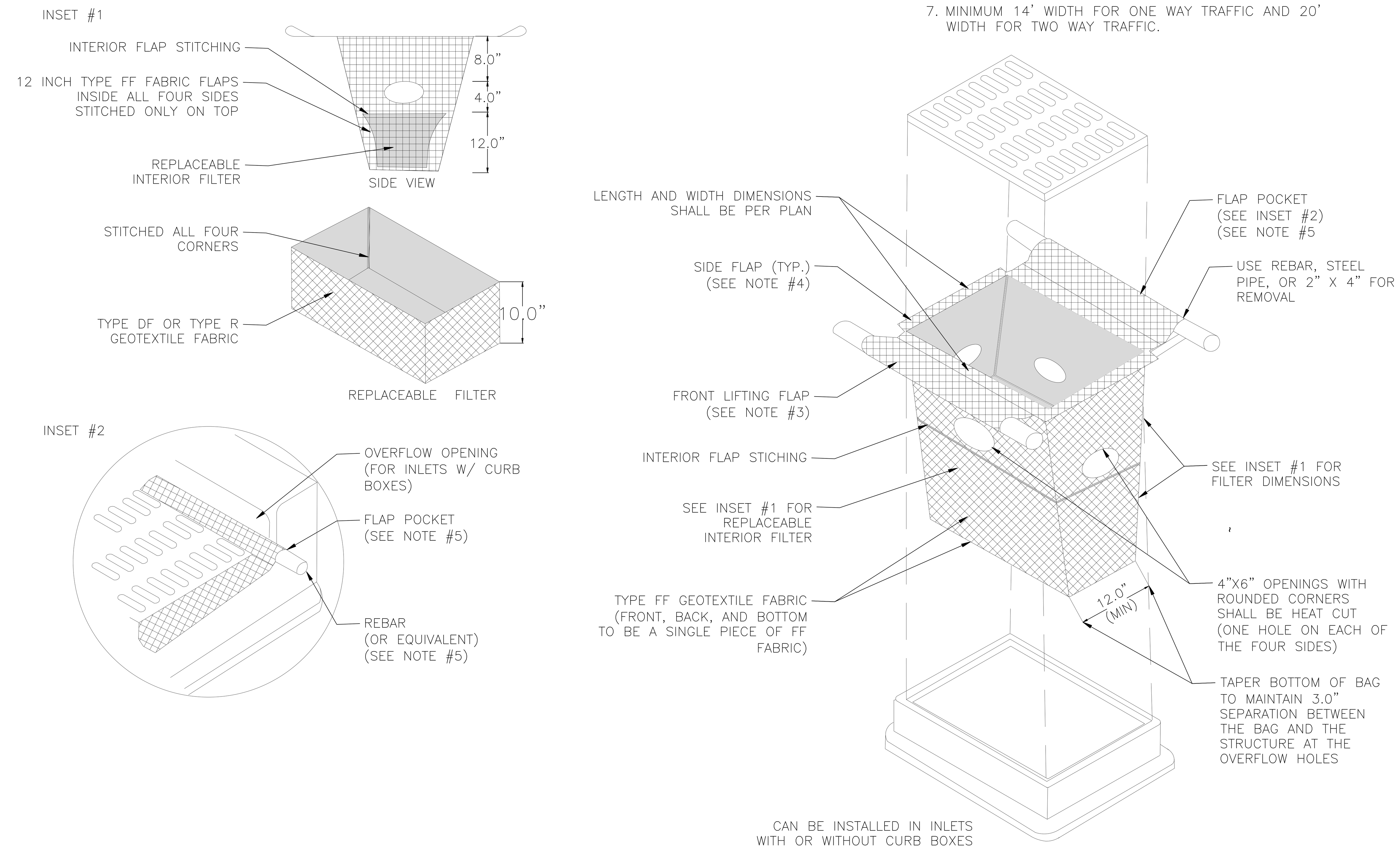

NOTES

1. TAPER BOTTOM OF BAG TO MAINTAIN THREE INCHES OF CLEARENCE BETWEEN THE BAG AND THE STRUCTURE. MEASURED FROM THE BOTTOM OF THE OVERFLOW OPENING TO THE STRUCTURE WALL.
2. GEOTEXTILE FABRIC TYPE FF FOR FLAPS, TOP AND BOTTOM OF OUTSIDE OF FILTER BAG, FRONT, BACK AND BOTTOM OF FILTER BEING ONE PIECE.
3. FRONT LIFTING FLAP IS TO BE USED WHEN REMOVING AND MAINTAINING FILTER BAG.
4. SIDE FLAPS SHALL BE A MAXIMUM OF TWO INCHES LONG. FOLD THE FABRIC OVER AND REINFORCE WITH MULTIPLE STITCHES.
5. FLAP PROCKETS SHALL BE LARGER ENOUGH TO ACCEPT WOOD 2"X4". THE REBAR, STEEL PIPE, OR WOOD SHALL BE INSTALLED IN THE REAR FLAP AND SHALL NOT BLOCK THE TOP HALF OF THE CURB FACE OPENING.

MAINTENANCE NOTES:

1. WHEN REMOVING OR MANTAINING INLET PROTECTION, CARE SHALL BE TAKEN SO THAT THE SEDIMENT TRAPPED IN THE FABRIC DOES NOT FALL INTO THE STRUCTURE. MATERIAL THAT HAS FALLEN INTO THE INLET SHALL BE IMMEDIATELY REMOVED.

FSGROUP®
ARCHITECTS
13105 Northwest Fwy Suite 1110
Houston Texas 77040
713 344 1752 Office
www.fsdesignbuild.com

PROJECT NAME

INFORMATION TECHNOLGY BUILDING
EUGENE HEIMANN CIRCLE
FORT BEND COUNTY , TEXAS

CONSULTANTS

ISANI CONSULTANTS L.P
ISANI
civil \ design \ engineers
10448 WEST OFFICE DRIVE
HOUSTON, TEXAS 77042
T: (713) 747 2399
F: (713) 747 4797
TBPE FIRM REGISTRATION #4575

ISANI PROJECT NO: 23LD73

PROFESSIONAL SEAL

STATE OF TEXAS
RAM GULIANI
101094
LICENSED
05/15/2024

ISSUED FOR

ISSUED FOR PROPOSAL AND PERMIT

REVISIONS

No.	DESCRIPTION	DATE

KEY PLAN

SHEET TITLE

SWPPP DETAIL - 1

SCALE	As indicated
DATE	05/15/2024
PROJECT NUMBER	2319
SHEET NUMBER	C5.01

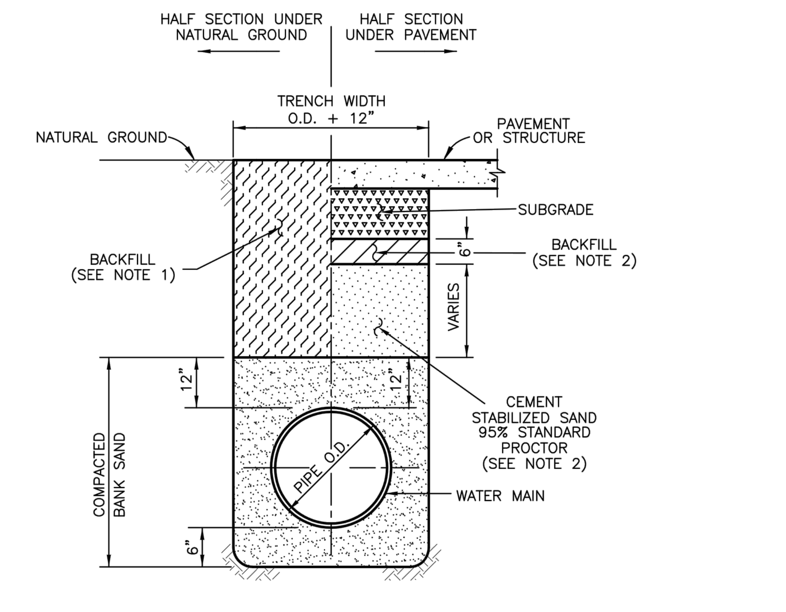

NOTES

1. BACKFILL SHALL BE NATIVE SOIL, FREE OF DEBRIS, PLACED IN LIFTS, 8" THICK OR LESS, COMPACTED TO 90% STANDARD PROCTOR DENSITY, EXCEPT AS REQUIRED BELOW.
2. BACKFILL UNDER AND WITHIN 3 FEET OF DRIVEWAYS AND PUBLIC STREETS SHALL BE CEMENT STABILIZED SAND (1.5 SACKS OF CEMENT PER CUBIC YARD OF SAND), EXCEPT THE TOP 6" SHALL BE NATIVE SOIL, FREE OF DEBRIS. ALL BACKFILL UNDER PAVING SHALL BE COMPACTED TO 95% STANDARD PROCTOR DENSITY.
3. TRENCH SHORING, IN ACCORDANCE WITH OSHA, SHALL BE INSTALLED AS REQUIRED.

1. WATER LINE BEDDING

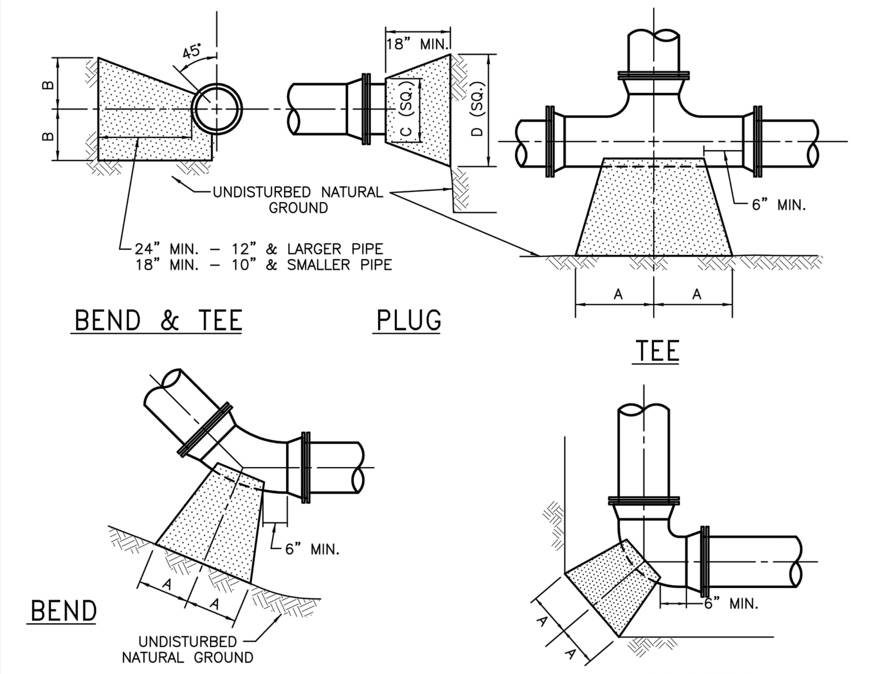

SIZE	90° BEND		45° BEND		22½° BEND		TEES		PLUGS	
	A	B	A	B	A	B	A	B	C	D
2½"	12"	7"	6"	7"	6"	6"	7"	8"	8"	14"
4"	14"	8"	7"	9"	6"	6"	8"	11"	8"	18"
6"	16"	10"	9"	10"	6"	8"	10"	12"	10"	21"
8"	22"	13"	12"	13"	8"	10"	13"	16"	12"	29"
12"	29"	21"	16"	21"	11"	16"	18"	24"	16"	41"
16"	38"	27"	21"	27"	12"	24"	24"	30"	20"	54"

NOTES:
1. THRUST BLOCKS AT TRENCH FACE MUST HAVE A MINIMUM BEARING SURFACE OF 1.0 SQ. FOOT AND THE LEAST DIMENSION SHALL BE NO SMALLER THAN 1.5 TIMES PIPE DIAMETER, BUT NOT LESS THAN 1.0 FT.
2. THRUST BLOCKS SHALL BE PACKED AT ALL FITTINGS.
3. ALL FITTINGS SHALL BE M.J. RESTRAINED JOINT (EBAA IRON, SERIES 2000PV, OR APPROVED EQUAL).

2. THRUST BLOCK

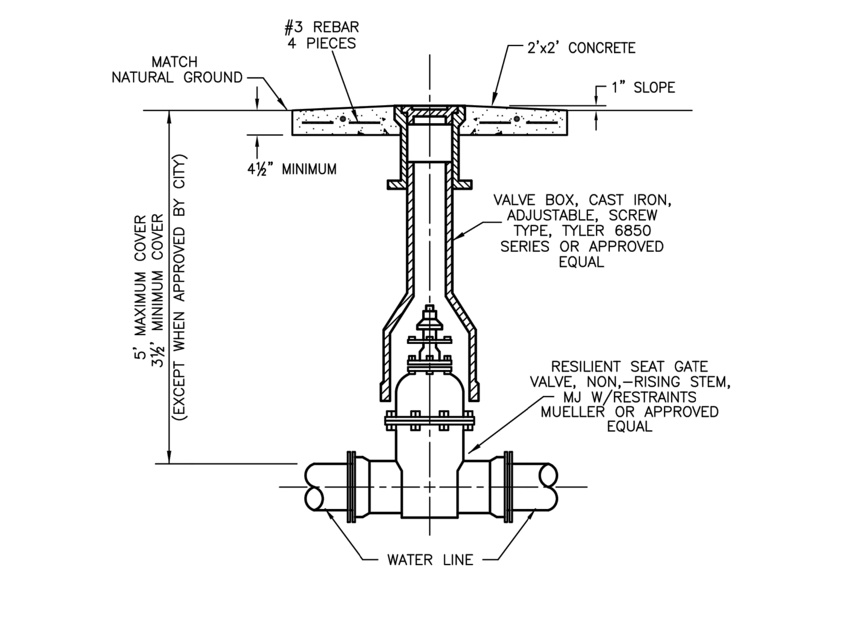

NOTES:
1. PROVIDE OPERATING NUT EXTENSION, AS NEEDED, TO APPROXIMATELY THREE (3) FEET BELOW FINISHED GRADE.
2. VALVE BOX SHALL NOT TRANSMIT ANY LOAD DIRECTLY TO THE VALVE OR PIPE.
3. GATE VALVES SHALL BE COUNTER–CLOCKWISE OPEN.
4. TAPPING VALVES ARE NOT ALLOWED WHEN TAP IS SAME SIZE AS THE EXISTING MAIN EXCEPT WHEN APPROVED BY PUBLIC WORKS.

3. GATE VALVE AND BOX

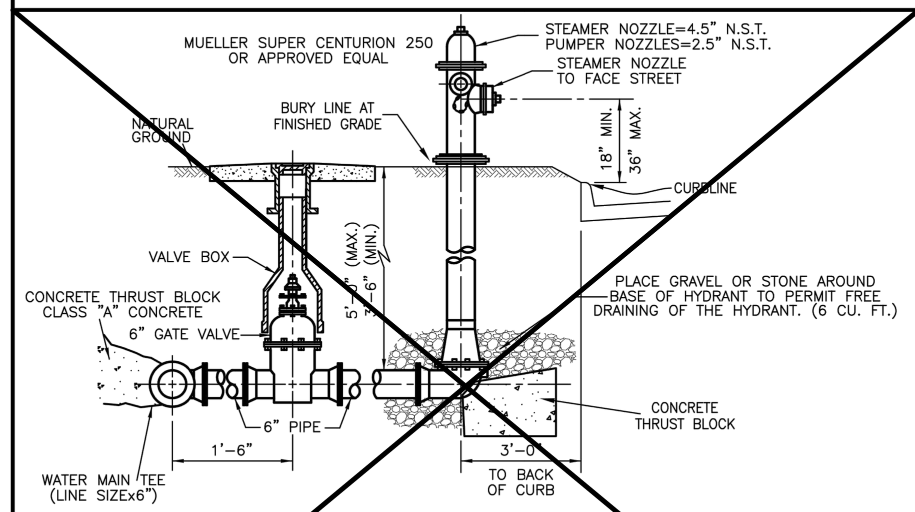

NOTES:
1. 5/8" ALL–THREAD IS TO BE USED TO TIE VALVE TO TEE AND VALVE TO HYDRANT.
2. PROVIDE MECHANICAL RESTRAINED JOINTS (EBBA IRON, SERIES 2000PV, OR APPROVED EQUAL).
3. PAINT ALL FIRE HYDRANT BARRELS SILVER. PAINT BONNET AND CAPS IN ACCORDANCE WITH CITY OF RICHMOND REQUIREMENTS BASED ON FLOW CAPACITIES. (COLORS: BLUE–1500 GPM AND ABOVE; GREEN–1000 GPM TO 1499 GPM; ORANGE–500 GPM TO 999 GPM; RED–LESS THAN 500 GPM).

4. FIRE HYDRANT

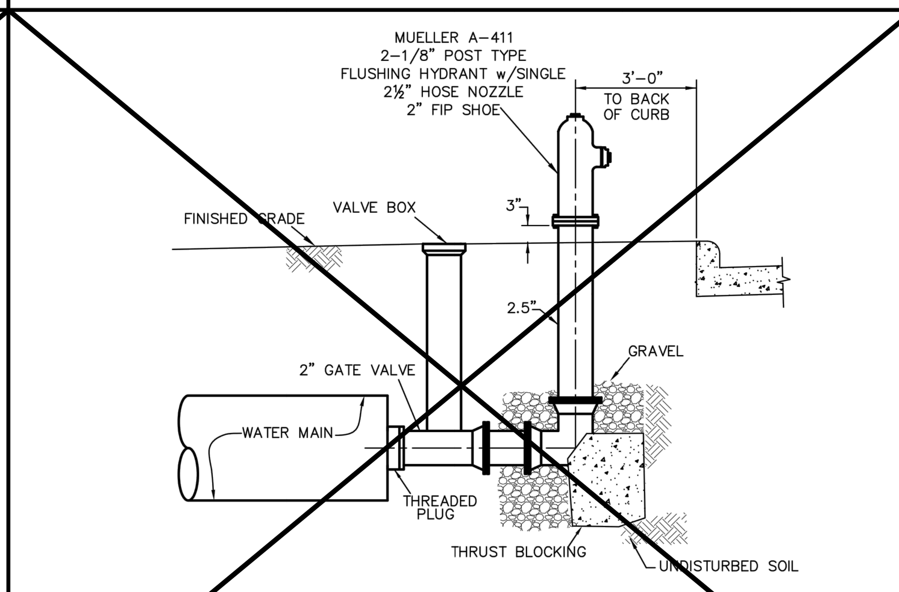

NOTE:
1. ON OPEN–DITCH ROADWAYS, SET THE FLUSHING HYDRANTS WITHIN 3 FEET OF ROAD RIGHT–OF–WAY LINE.
2. PAINT ALL FLUSH VALVES SILVER.

5. 2" BLOWOFF VALVE ASSEMBLY

FOR A LINE TO PASS OVER AN OBSTRUCTION RATHER THAN UNDER, IT MUST HAVE ADEQUATE COVER AND BE APPROVED BY DEPARTMENT OF PUBLIC WORKS.

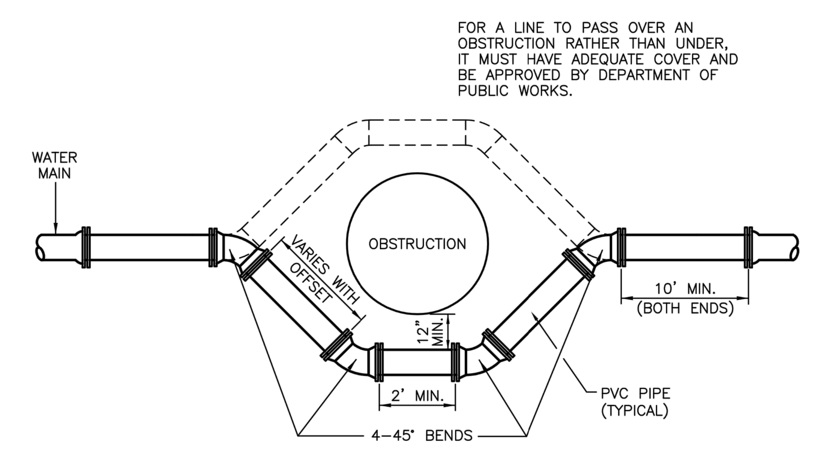

NOTES:
1. OFFSET ASSEMBLIES SHALL BE CONSTRUCTED WHEN THE PIPE DEPTH EXCEEDS 8 FEET AND WHEN THE LINE WILL BE CONSTRUCTED WITH A DEPTH GREATER THAN 6 FEET AT A FIRE HYDRANT OR SERVICE LEAD.
2. PIPE–AWWA C900 DR–18, 150 PSI WITH INTEGRAL PVC JOINT.
3. FITTINGS–DUCTILE IRON EPOXY LINED AND COATED, MECHANICAL RESTRAINED JOINT (EBAA IRON, SERIES 2000PV, OR APPROVED EQUAL).
4. PROVIDE 2–5/8" ALL–THREAD RODS BETWEEN ALL FITTINGS.

6. WATER PIPE OFFSET ASSEMBLY

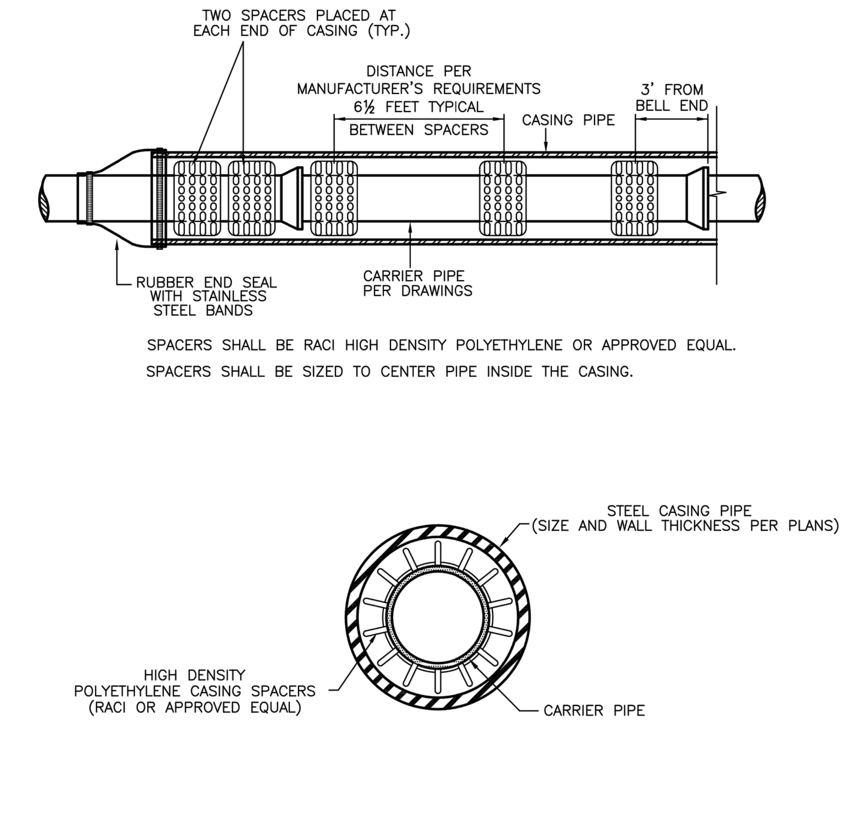

SPACERS SHALL BE RACI HIGH DENSITY POLYETHYLENE OR APPROVED EQUAL.

SPACERS SHALL BE SIZED TO CENTER PIPE INSIDE THE CASING.

NOTES:
1. CASING SPACERS SHALL BE USED TO INSTALL THE CARRIER PIPE INSIDE THE ENCASEMENT PIPE TO PROVIDE SUPPORT AROUND THE PERIPHERY OF THE PIPE. MINIMUM CLEARANCE BETWEEN MAXIMUM O.D. OF CARRIER PIPE AND I.D. OF CASING SHALL BE ONE INCH.
2. SPACERS SHALL BE PROJECTION TYPE, WITH A MINIMUM NUMBER OF PROJECTIONS AROUND THE CIRCUMFERENCE EQUAL TO THE NUMBER OF DIAMETER INCHES OF THE CARRIER PIPE. CASING SPACERS SHALL BE TOTALLY NON–METALLIC SPACERS CONSTRUCTED OF INTERLOCKING PREFORMED SECTIONS OF HIGH DENSITY POLYETHYLENE. SPACERS SHALL BE ISO 9002 CERTIFIED FOR STRENGTH AND QUALITY.
3. THE ENDS OF THE CASING SHALL BE SEALED USING PWM MODEL 1 WA WRAP AROUND END SEAL MADE OF 1/8" THICKNESS RUBBER AND STAINLESS STEEL BANDS, OR APPROVED EQUAL.

PVC PIPE IN CASING

DR18 C900/C905 PVC PIPE	OD"	BELL OD"	STEEL CASING DIAMETER	RACI SPACERS MODEL*
4"	4.80"	6.38"	10"	2F 41
6"	6.90"	8.88"	12"	2F, 1G 41
8"	9.05"	11.38"	14"	3F, 1G 41
10"	11.10"	13.97"	16"	4F 41
12"	13.20"	16.34"	20"	5F 60
14"	15.30"	18.23"	22"	6F 60
16"	17.40"	20.58"	24"	7F 60

7. WATER LINE CASING

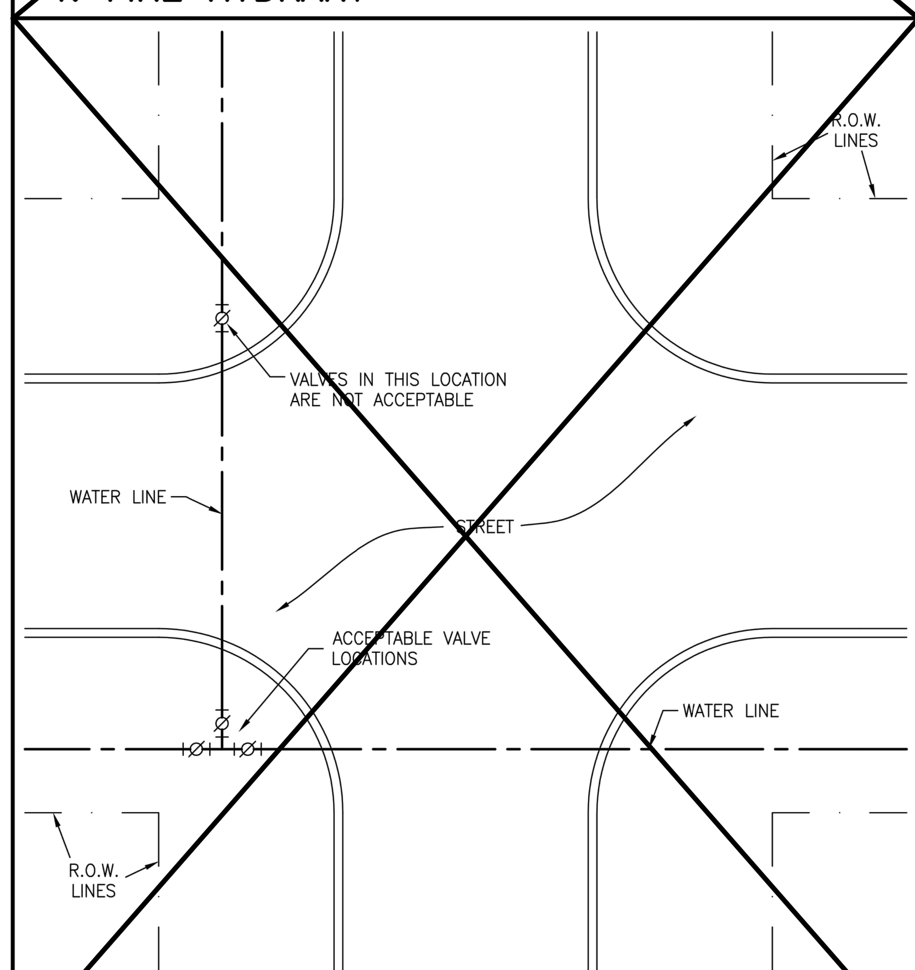

8. VALVE LOCATION PLAN

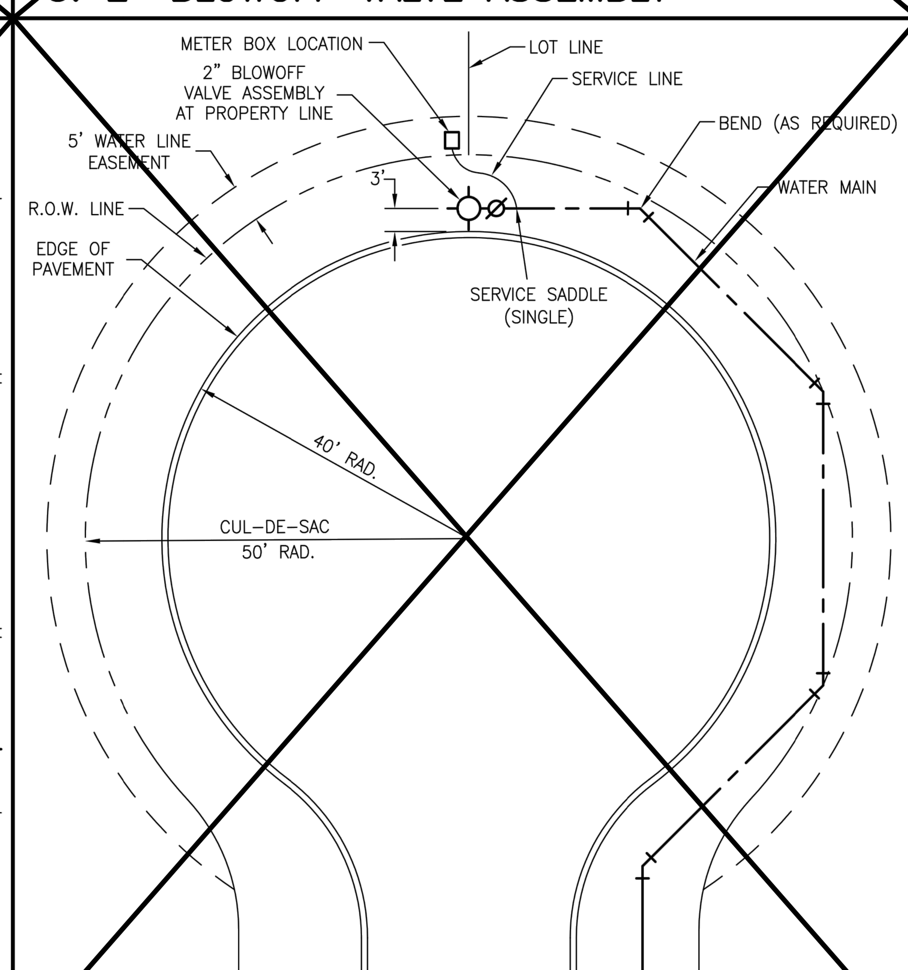

9. BLOWOFF LOCATION PLAN

NO.	DATE	REVISIONS	APP.

CITY OF RICHMOND
APPROVALS

LENERT KURTZ, DIRECTOR OF PUBLIC WORKS — DATE

GARREN SCHMIDT, WATER SUPERINTENDENT — DATE

WADE WENDT, WASTEWATER SUPERINTENDENT — DATE

JIM WHITEHEAD, STREET SUPERINTENDENT — DATE

DWAYNE PRICE, PARKS SUPERINTENDENT — DATE

CITY OF RICHMOND
STANDARD CONSTRUCTION DETAILS
WATER

SCALE		DESIGNED BY:	RWS
HORIZONTAL	1" = NTS	DRAWN BY:	DCB
VERTICAL	1" = NTS	CHECKED BY:	KRK
		DATE:	OCTOBER 24, 2005
		JOB NO:	
		DWG. NO:	
		Sheet:	R–2
		of	

FSGROUP ARCHITECTS
13105 Northwest Fwy Suite 1110
Houston Texas 77040
713 344 1752 Office
www.fsdesignbuild.com

PROJECT NAME

THE STATE OF TEXAS · FORT BEND COUNTY

INFORMATION TECHNOLGY BUILDING
EUGENE HEIMANN CIRCLE
FORT BEND COUNTY . TEXAS

CONSULTANTS

ISANI CONSULTANTS L.P
ISANI
civil \ design \ engineers
10448 WEST OFFICE DRIVE
HOUSTON, TEXAS 77042
T: (713) 747 2399
F: (713) 747 4797
TBPE FIRM REGISTRATION #4575

ISANI PROJECT NO: 23LD73

PROFESSIONAL SEAL

STATE OF TEXAS
RAM GULIANI
101094
LICENSED PROFESSIONAL ENGINEER
05/15/2024

ISSUED FOR

ISSUED FOR PROPOSAL AND PERMIT

REVISIONS

No.	DESCRIPTION	DATE

KEY PLAN

SHEET TITLE

CIVIL DETAILS - 1

SCALE: As indicated

DATE: 05/15/2024

PROJECT NUMBER: 2319

SHEET NUMBER

C6.01

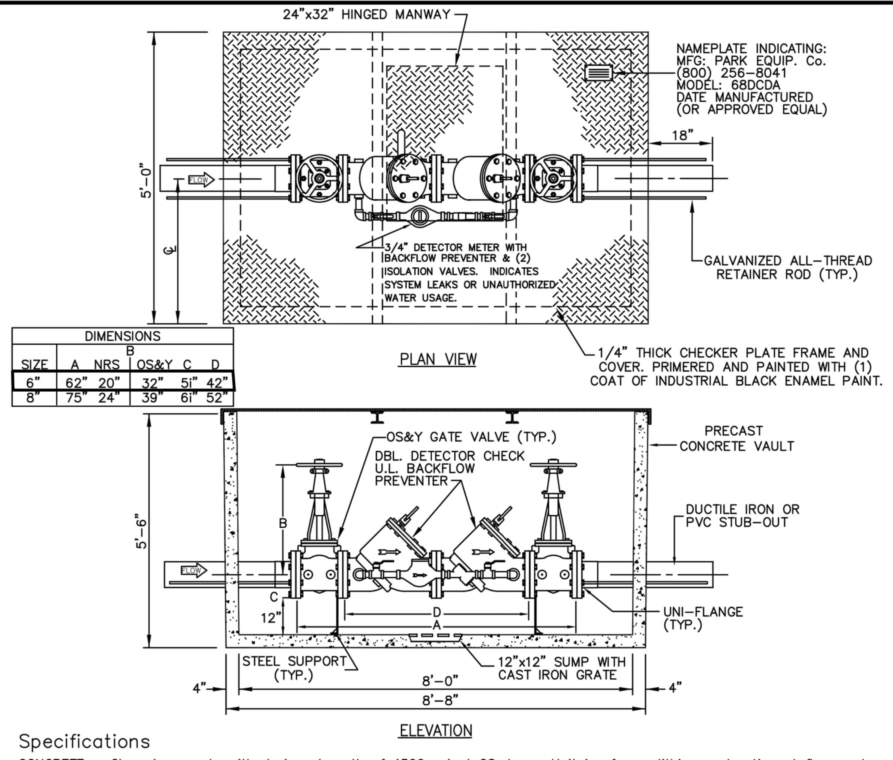

Specifications

CONCRETE – Class 1 concrete with design strength of 4500 psi at 28 days. Unit is of monolithic construction at floor and first stage of wall with sectional riser to required depth. Gross empty weight of approximately 9,000 pounds.

REINFORCEMENT – Grade 60 reinforced. Steel rebar conforming to ASTM A615 on required centers or equal.

STEEL COVER – 1/4" steel skid-resistant floor plate welded to 3" angle frame with (2) 3"x2-3/8" I beam supports.

Notes:

Backflow assembly shall be factory assembled complete with concrete vault and be tested prior to setting in excavation. Manufacturer shall provide certified engineering data and buoyancy calculation.

1. DOUBLE CHECK DETECTOR ASSEMBLY

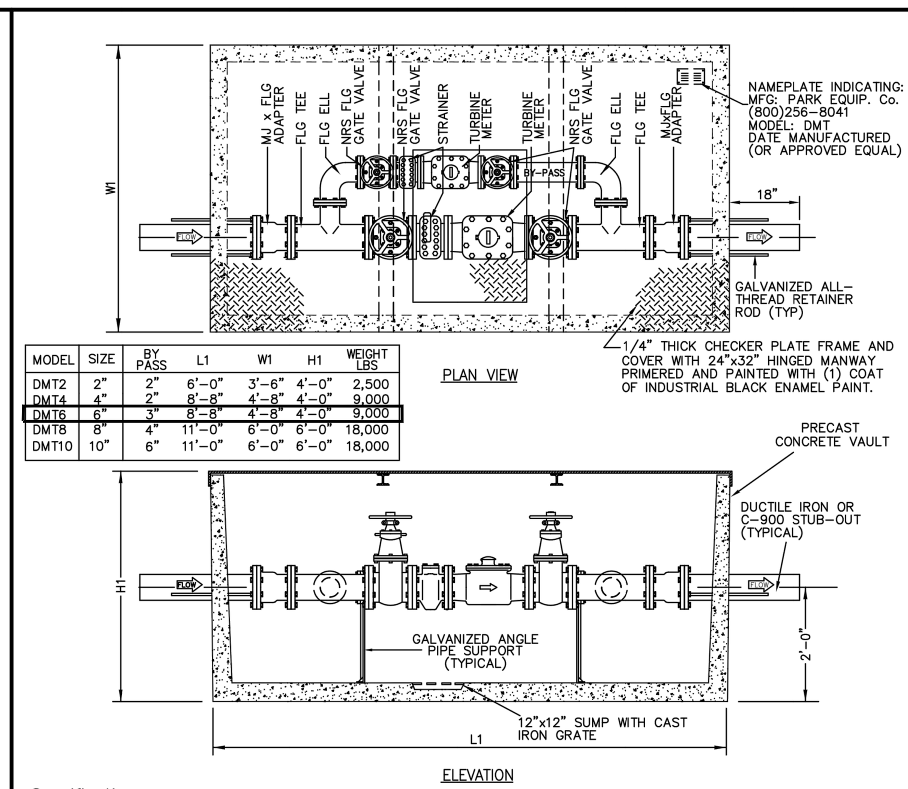

MODEL	SIZE	BY PASS	L1	W1	H1	WEIGHT LBS
DMT2	2"	2"	6'-0"	3'-6"	4'-0"	2,500
DMT4	4"	2"	8'-8"	4'-8"	4'-0"	9,000
DMT6	6"	3"	8'-8"	4'-8"	4'-0"	9,000
DMT8	8"	4"	11'-0"	6'-0"	6'-0"	18,000
DMT10	10"	6"	11'-0"	6'-0"	6'-0"	18,000

Specifications

CONCRETE – Class 1 concrete with design strength of 4,500 psi at 28 days. Unit is of monolithic construction at floor and first stage of wall with sectional riser to required depth.

REINFORCEMENT – Grade 60 reinforced. Steel rebar conforming to ASTM A615 on required centers or equal.

STEEL COVER – 1/4" steel skid-resistant floor plate welded to 3" angle frame with (2) 3"x3" angle supports (300 psf).

2. DOMESTIC TURBINE WATER METER ASSEMBLY

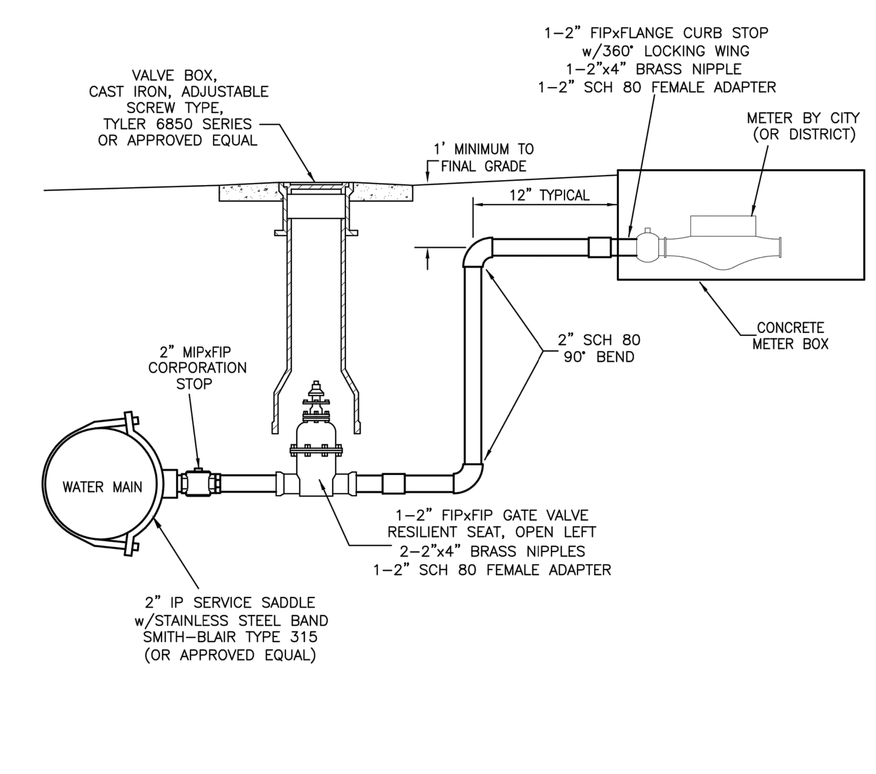

NOTE:
USE ONLY 2" SCH 80 PVC PIPE AND FITTINGS

3. 2" WATER SERVICE CONNECTION

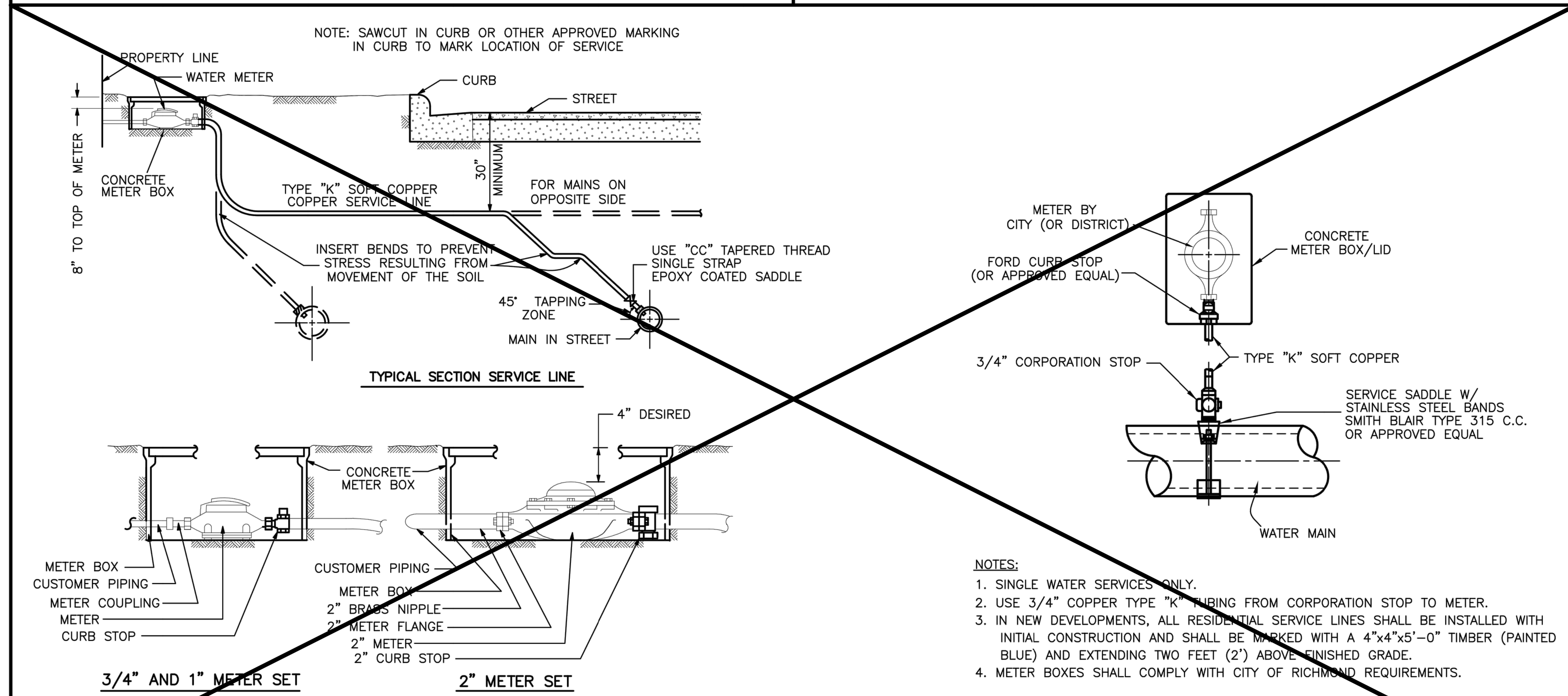

NOTES:

1. SINGLE WATER SERVICES ONLY.
2. USE 3/4" COPPER TYPE "K" TUBING FROM CORPORATION STOP TO METER.
3. IN NEW DEVELOPMENTS, ALL RESIDENTIAL SERVICE LINES SHALL BE INSTALLED WITH INITIAL CONSTRUCTION AND SHALL BE MARKED WITH A 4"x4"x5'-0" TIMBER (PAINTED BLUE) AND EXTENDING TWO FEET (2') ABOVE FINISHED GRADE.
4. METER BOXES SHALL COMPLY WITH CITY OF RICHMOND REQUIREMENTS.

4. RESIDENTIAL WATER METER AND SERVICE LINE

NO.	DATE	REVISIONS	APP.

CITY OF RICHMOND
APPROVALS

LENERT KURTZ, DIRECTOR OF PUBLIC WORKS	DATE
GARREN SCHMIDT, WATER SUPERINTENDENT	DATE
WADE WENDT, WASTEWATER SUPERINTENDENT	DATE
JIM WHITEHEAD, STREET SUPERINTENDENT	DATE
DWAYNE PRICE, PARKS SUPERINTENDENT	DATE

CITY OF RICHMOND
STANDARD CONSTRUCTION DETAILS
WATER

SCALE		
HORIZONTAL	1" = NTS	DESIGNED BY: RWS
VERTICAL	1" = NTS	DRAWN BY: DCB
		CHECKED BY: KRK
		DATE: OCTOBER 24, 2005
		JOB NO:
		DWG. NO:
		Sheet: R-3 of

FSGROUP® ARCHITECTS
13105 Northwest Fwy Suite 1110
Houston Texas 77040
713 344 1752 Office
www.fsdesignbuild.com

PROJECT NAME

THE STATE OF TEXAS · FORT BEND COUNTY

INFORMATION TECHNOLGY BUILDING
EUGENE HEIMANN CIRCLE
FORT BEND COUNTY . TEXAS

CONSULTANTS

ISANI CONSULTANTS L.P
ISANI
civil \ design \ engineers
10448 WEST OFFICE DRIVE
HOUSTON, TEXAS 77042
T: (713) 747 2399
F: (713) 747 4797
TBPE FIRM REGISTRATION #4575

ISANI PROJECT NO: 23LD73

PROFESSIONAL SEAL

STATE OF TEXAS
RAM GULIANI
101094
LICENSED
PROFESSIONAL ENGINEER
05/15/2024

ISSUED FOR

ISSUED FOR PROPOSAL AND PERMIT

REVISIONS

No.	DESCRIPTION	DATE

KEY PLAN

SHEET TITLE

CIVIL DETAILS - 2

SCALE
As indicated

DATE
05/15/2024

PROJECT NUMBER
2319

SHEET NUMBER

C6.02

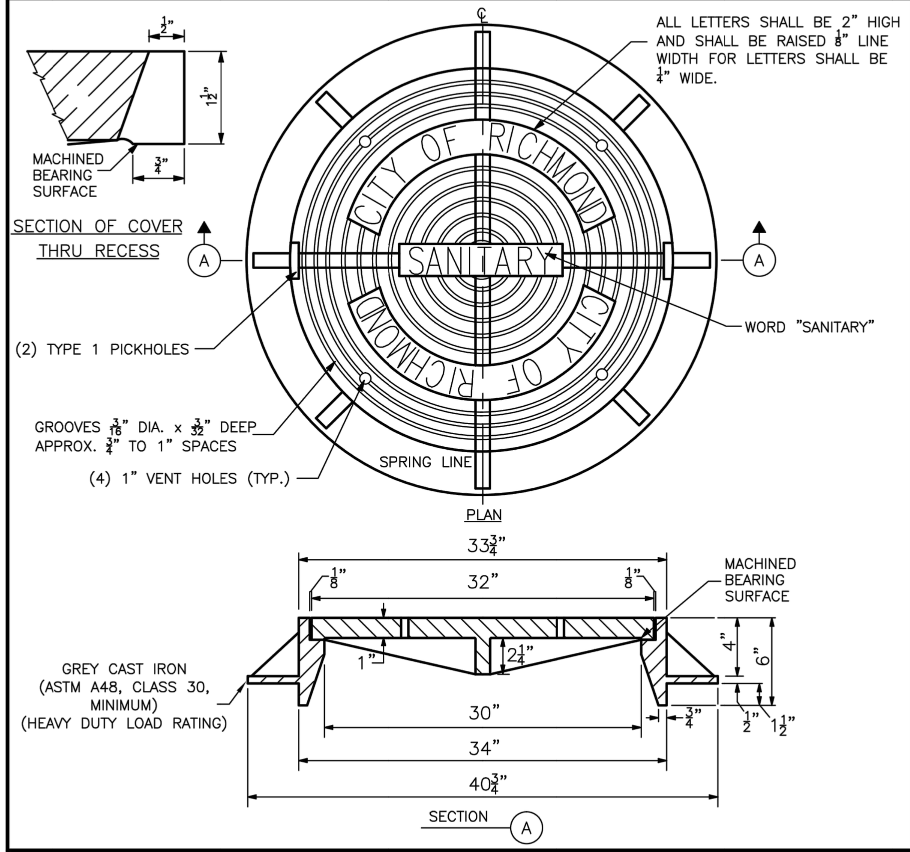

1. MANHOLE FRAME AND COVER

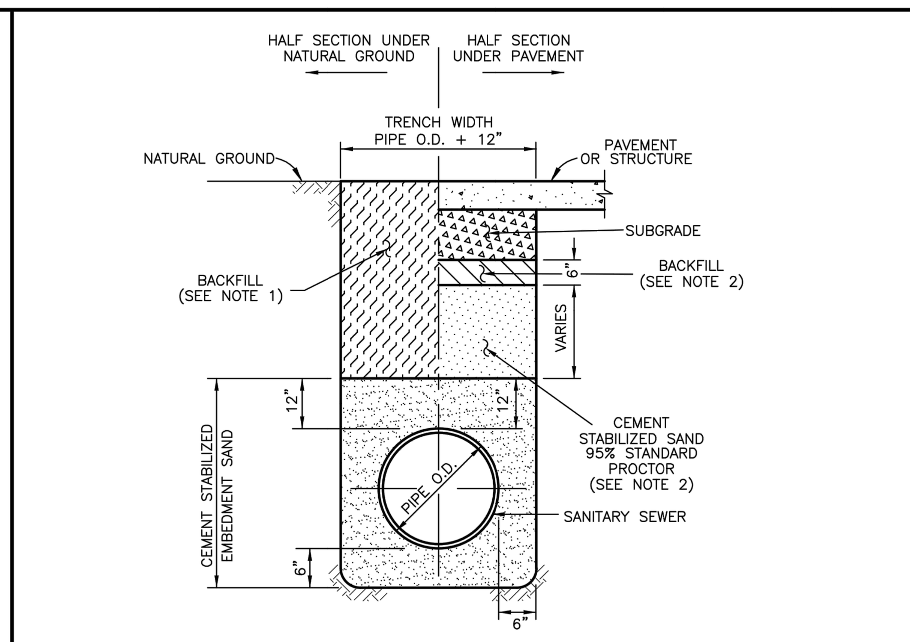

NOTES

1. BACKFILL SHALL BE NATIVE SOIL, FREE OF DEBRIS, PLACED IN LIFTS, 8" THICK OR LESS, COMPACTED TO 95% STANDARD PROCTOR DENSITY, (CONTRACTOR TO USE PROPER COMPACTION EQUIPMENT TO ACHIEVE DESIRED DENSITY.) EXCEPT AS REQUIRED BELOW.
2. BACKFILL UNDER AND WITHIN 3 FEET OF DRIVEWAYS AND PUBLIC STREETS SHALL BE CEMENT STABILIZED SAND (2 SACKS OF CEMENT PER TON OF SAND), EXCEPT THE TOP 6" SHALL BE NATIVE SOIL, FREE OF DEBRIS. ALL BACKFILL UNDER PAVING SHALL BE COMPACTED TO 95% STANDARD PROCTOR DENSITY.
3. TRENCH SHORING, IN ACCORDANCE WITH OSHA, SHALL BE INSTALLED AS REQUIRED.

2. SANITARY SEWER BEDDING

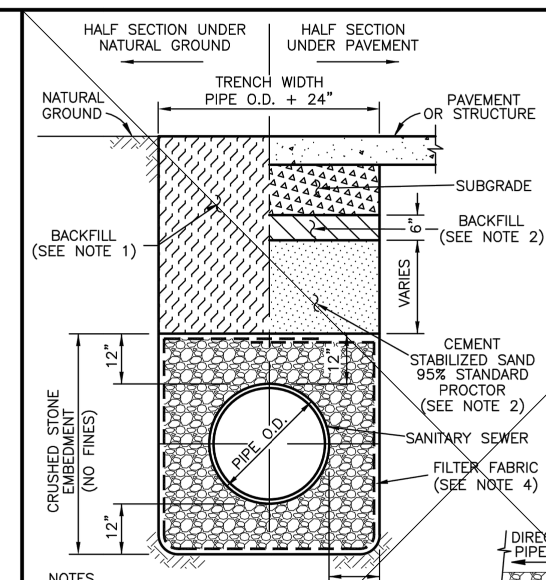

NOTES

1. BACKFILL SHALL BE NATIVE SOIL, FREE OF DEBRIS, PLACED IN LIFTS, 8" THICK OR LESS, COMPACTED TO 95% STANDARD PROCTOR DENSITY, EXCEPT AS REQUIRED BELOW.
2. BACKFILL UNDER AND WITHIN 3 FEET OF DRIVEWAYS AND PUBLIC STREETS SHALL BE CEMENT STABILIZED SAND (2 SACKS OF CEMENT PER TON OF SAND), EXCEPT THE TOP 6" SHALL BE NATIVE SOIL, FREE OF DEBRIS. ALL BACKFILL UNDER PAVING SHALL BE COMPACTED TO 95% STANDARD PROCTOR DENSITY.
3. TRENCH SHORING, IN ACCORDANCE WITH OSHA, SHALL BE INSTALLED AS REQUIRED.
4. FILTER FABRIC, ARMCO TREVIRA S1115 OR EQUAL, 18" LAP AT ALL EDGES.

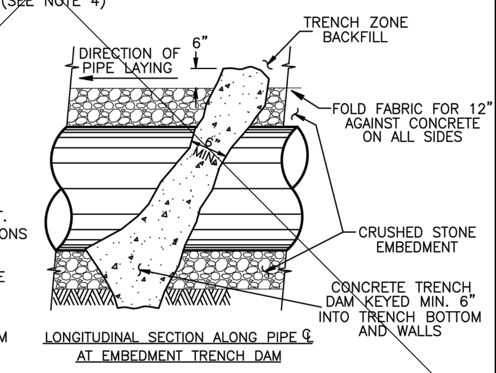

NOTES

1. TRENCH DAM MAY BE FORMED OR UNFORMED, ACTUAL SHAPE OF CONCRETE TRENCH DAM OR CROSS SECTION MAY BE DETERMINED IN FIELD, MEETING MINIMUM THICKNESS AND KEY DEPTH REQUIREMENTS.
2. TRENCH DAM SHALL BE PLACED AT LEAST 5 FT. AWAY FROM ANY STRUCTURE. SEE SPECIFICATIONS FOR OTHER REQUIREMENTS.
3. PLACE TRENCH DAMS AT THE MIDPOINT OF LINE SEGMENTS LONGER THAN 100 FEET BETWEEN MANHOLES.
4. TRENCH DAM CONCRETE SHALL HAVE A MINIMUM COMPRESSIVE STRENGTH OF 2500 PSI.

3. SANITARY SEWER BEDDING FOR WET CONDITIONS

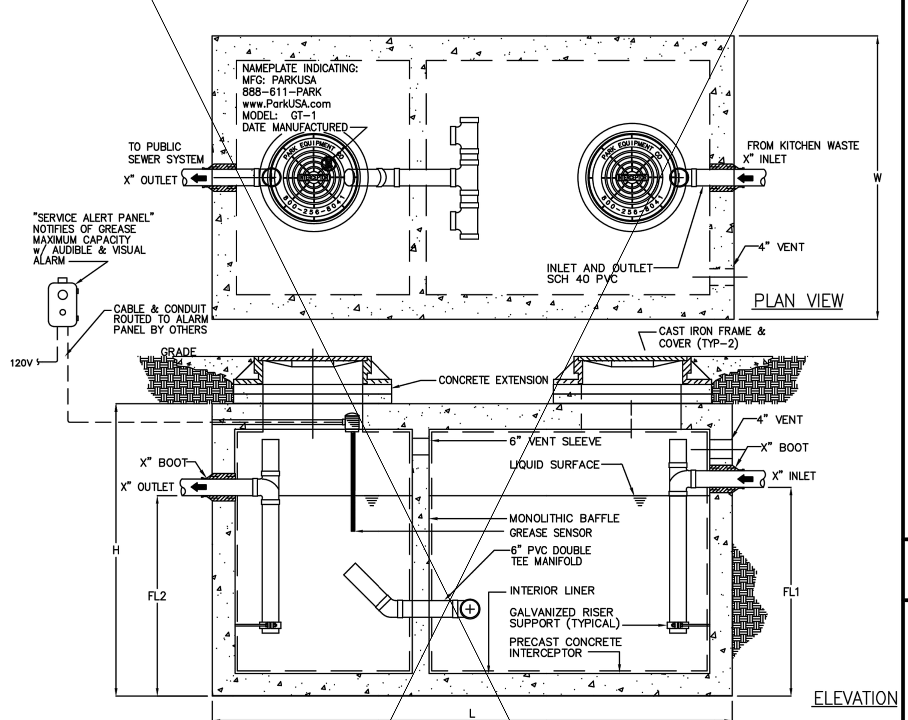

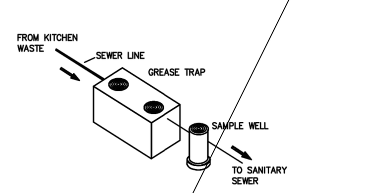

TYPICAL APPLICATIONS INCLUDE COMMERCIAL AND INDUSTRIAL FOOD SERVICE KITCHENS WHERE EXCESSIVE GREASE MAY INTERFERE WITH THE PROPER DRAINAGE OF THE SEWER SYSTEM. THE GREASE INTERCEPTOR IS GENERALLY BURIED BELOW GRADE FOR GRAVITY FLOW SEWER SYSTEMS. A SAMPLE WELL IS UTILIZED ON THE OUTLET SIDE FOR SAMPLING BY THE LOCAL WATER AUTHORITY.

GREASE INTERCEPTOR SCHEDULE

MODEL NO.	CAPACITY USGal	GREASE CAP. (LBS)	EMPTY WT (LBS)	LENGTH L	WIDTH W	HEIGHT H	INLET FL1	OUTLET FL2
GT–500	500	1,200	9,500	7'–10"	4'–4"	4'–6"	3'–3"	3'–0"
GT–750	750	1,700	9,900	7'–10"	4'–4"	6'–0"	4'–5"	4'–2"
GT–1000	1,000	2,300	13,350	8'–8"	5'–0"	6'–0"	4'–9"	4'–6"
GT–1250	1,250	2,900	14,650	9'–2"	5'–8"	6'–0"	4'–9"	4'–6"
GT–1500	1,500	3,500	16,050	9'–2"	5'–8"	7'–0"	5'–9"	5'–6"
GT–2000	2,000	4,600	21,250	9'–0"	6'–0"	8'–0"	6'–9"	6'–6"
GT–2500	2,500	5,700	27,050	13'–0"	7'–0"	7'–0"	5'–9"	5'–6"
GT–3000	3,000	6,900	33,150	13'–0"	7'–0"	8'–0"	6'–9"	6'–6"
GT–3500	3,500	8,000	38,550	13'–0"	7'–0"	8'–6"	7'–3"	7'–0"
GT–4000	4,000	9,300	38,100	16'–0"	8'–6"	7'–0"	5'–9"	5'–6"

OTHER SIZES ARE AVAILABLE. CONTACT US FOR MORE INFORMATION

SPECIFICATIONS

CONCRETE: CLASS I/II CONCRETE WITH DESIGN STRENGTH OF 4500 PSI AT 28 DAYS. UNIT IS OF MONOLITHIC CONSTRUCTION AT FLOOR, FIRST STAGE OF WALL AND BAFFLE WITH SECTIONAL RISER TO REQUIRED DEPTH. (MONOLITHIC BAFFLE REQUIRED, SLIDE-IN TYPE IS NOT ACCEPTABLE)

REINFORCEMENT: GRADE 60 REINFORCED WITH STEEL REBAR CONFORMING TO ASTM A615 ON REQUIRED CENTERS OR EQUAL.

C.I. CASTINGS: MANHOLE FRAMES, COVERS OR GRATES ARE MANUFACTURED OF GREY CAST IRON CONFORMING TO ASTM A48 CLASS 30. MANHOLE SHALL BE NOMINAL 24 INCH DIAMETER AND BE TRAFFIC DUTY.

ENGINEERING DATA

THE GREASE INTERCEPTOR IS STRUCTURALLY & HYDRAULICALLY ENGINEERED TO CONFORM TO UPC/IPC AND REGIONAL PLUMBING CODES RECOMMENDED IN MOST CITIES. CONSULT WITH LOCAL AUTHORITIES FOR SPECIFIC APPLICATION REQUIREMENTS.

SHOP DRAWINGS SHALL INCLUDE COMPLETE STRUCTURAL & BOUYANCY CALCULATIONS CERTIFIED BY A LICENSED PROFESSIONAL ENGINEER UPON REQUEST.

CONSULT WITH PARK EQUIPMENT COMPANY FOR EXACT EXCAVATION DIMENSIONS & SHIPPING INFORMATION.

4. GREASE TRAP

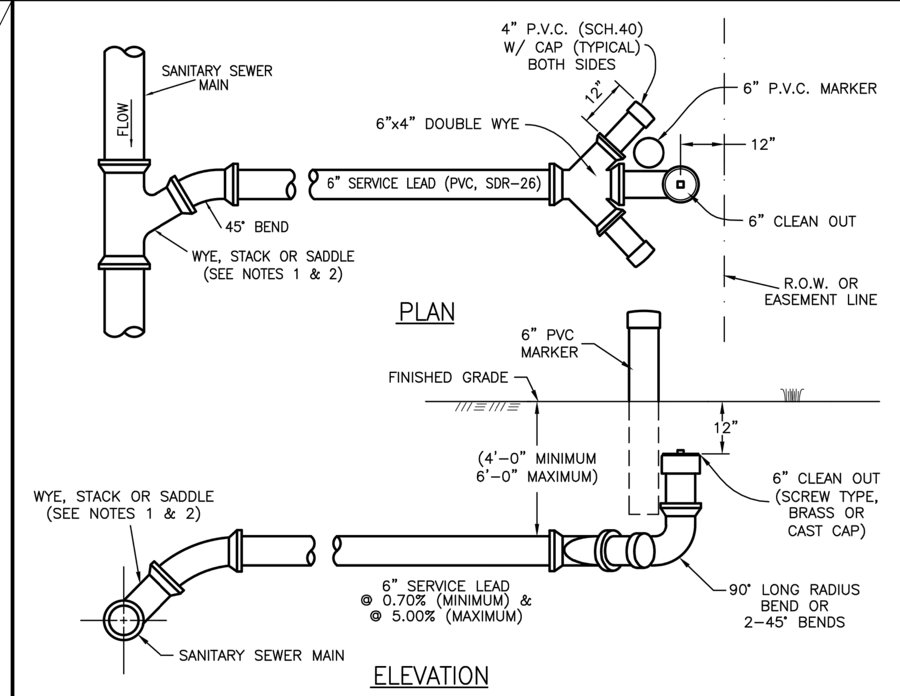

NOTES:

1. FOR NEW CONSTRUCTION "IN-LINE" WYES OR SERVICE STACKS SHALL BE USED FOR SERVICE CONNECTIONS TO SANITARY SEWERS.
2. FOR SERVICE CONNECTIONS ON EXISTING SANITARY SEWERS, PROPER SIZED SADDLES AND DRILLED TAP SHALL BE USED.
3. PROVIDE DOUBLE SERVICE CONNECTION WHERE POSSIBLE.
4. DELETE DOUBLE WYE ON SINGLE CONNECTION.
5. PROVIDE CEMENT STABILIZED BEDDING AND BACKFILL PER DETAILS.
6. 6" PVC MARKER (WITH SOLVENT WELD CAP) SHALL EXTEND FROM ADJOINING THE WYE TO 2'-0" ABOVE FINISHED GRADE.

5. SANITARY SEWER SERVICE CONNECTION

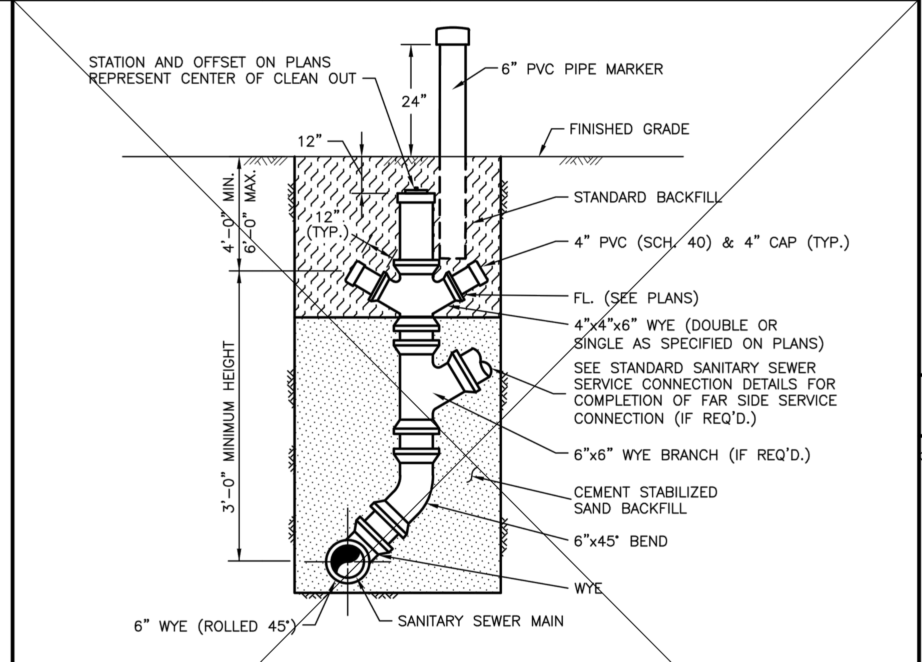

NOTES:

1. ALL STACK CONNECTIONS SHALL BE "IN-LINE" FITTINGS.
2. NO STACKS TO BE CONSTRUCTED ON EXISTING SANITARY SEWER LINES; LINES GREATER THAN 12' DEEP OR IN WET TRENCH CONDITIONS.
3. ALL FITTINGS TO BE PVC, SDR-26.
4. 6" PVC MARKER (WITH SOLVENT WELD CAP) SHALL EXTEND FROM ADJOINING THE WYE TO 2'-0" ABOVE FINISHED GRADE.

6. SANITARY SEWER STACK

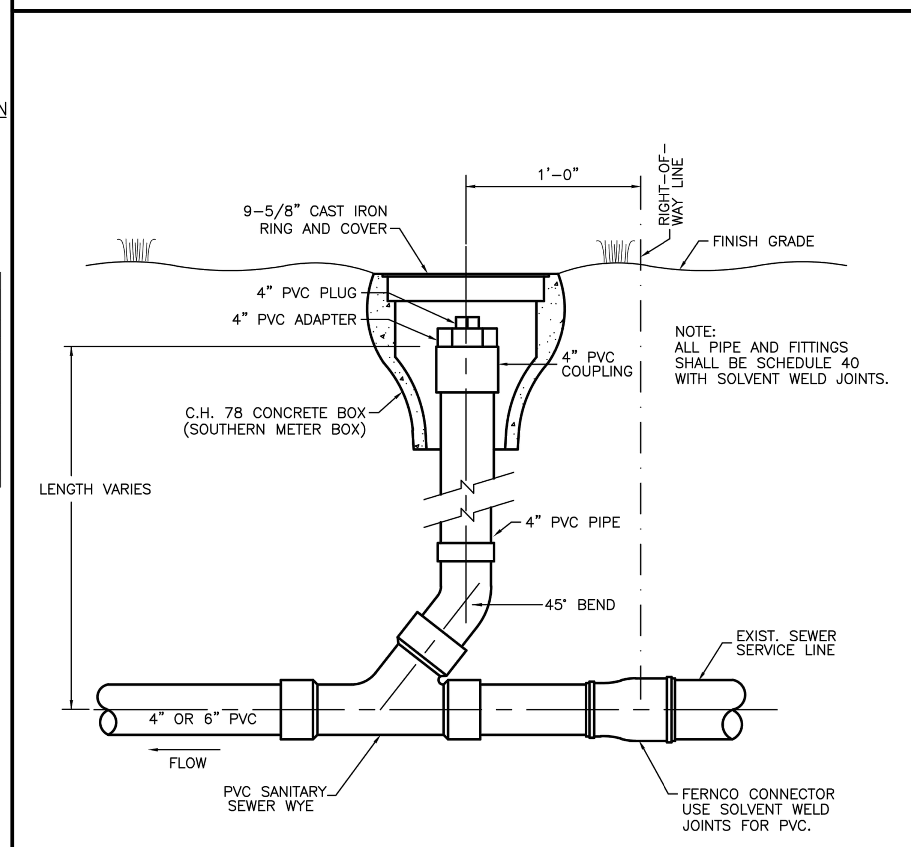

NOTE:
ALL PIPE AND FITTINGS SHALL BE SCHEDULE 40 WITH SOLVENT WELD JOINTS.

7. SERVICE LINE CLEANOUT ASSEMBLY

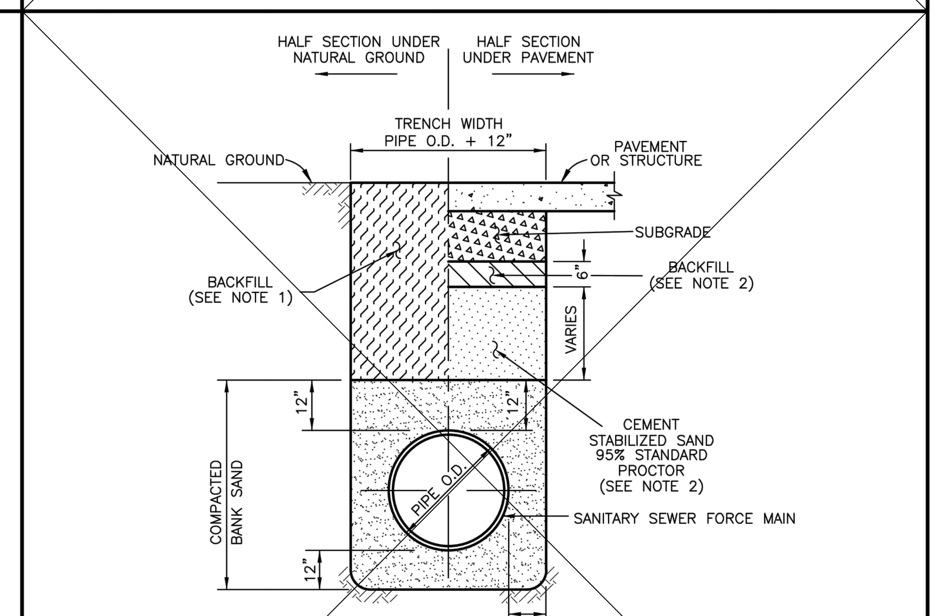

NOTES

1. BACKFILL SHALL BE NATIVE SOIL, FREE OF DEBRIS, PLACED IN LIFTS, 8" THICK OR LESS, COMPACTED TO 95% STANDARD PROCTOR DENSITY, (CONTRACTOR TO USE PROPER COMPACTION EQUIPMENT TO ACHIEVE DESIRED DENSITY.) EXCEPT AS REQUIRED BELOW.
2. BACKFILL UNDER AND WITHIN 3 FEET OF DRIVEWAYS AND PUBLIC STREETS SHALL BE CEMENT STABILIZED SAND (2 SACKS OF CEMENT PER TON OF SAND), EXCEPT THE TOP 6" SHALL BE NATIVE SOIL, FREE OF DEBRIS. ALL BACKFILL UNDER PAVING SHALL BE COMPACTED TO 95% STANDARD PROCTOR DENSITY.
3. TRENCH SHORING, IN ACCORDANCE WITH OSHA, SHALL BE INSTALLED AS REQUIRED.
4. ALL EXCAVATED MATERIAL WITH A P.I. OF 12 OR LESS MAY BE USED AS BACKFILL WITH FIELD APPROVAL BY THE CITY.

8. SANITARY SEWER FORCE MAIN BEDDING

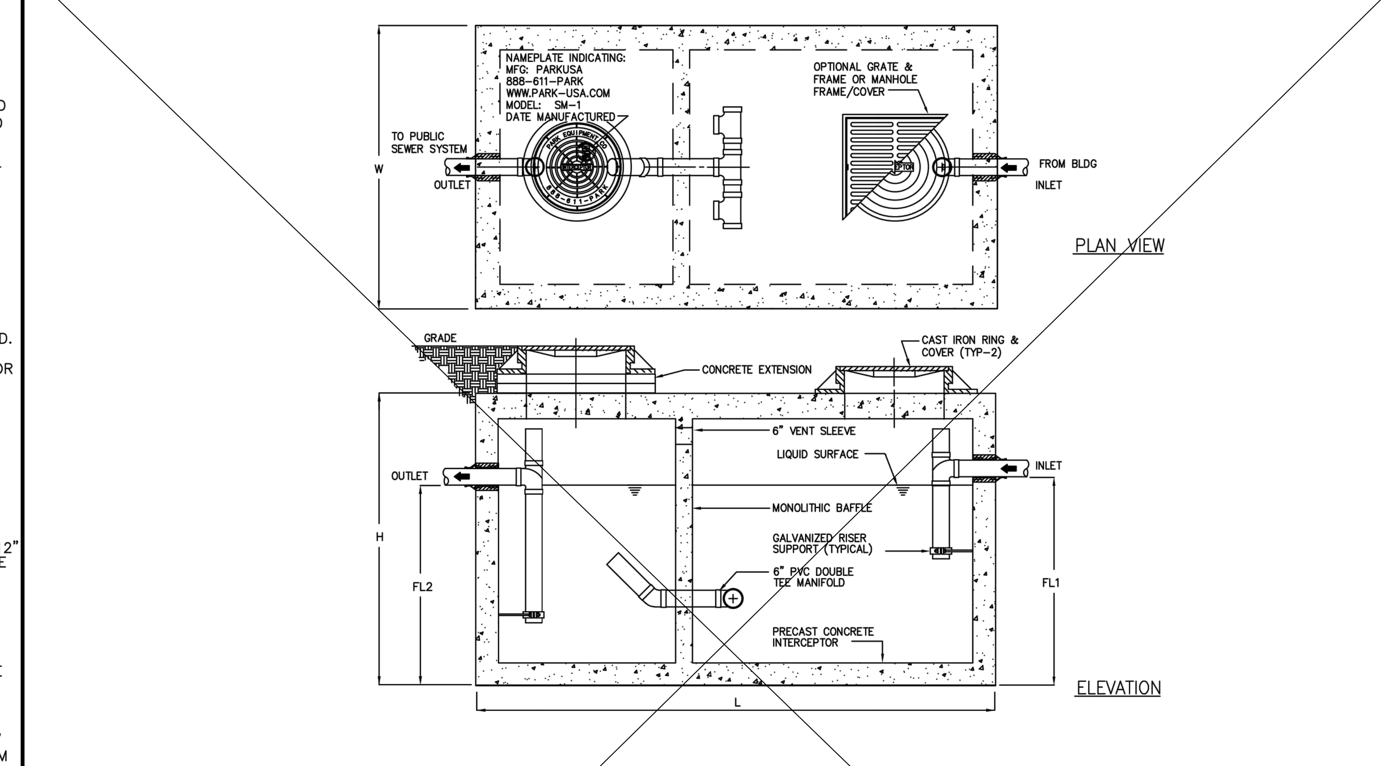

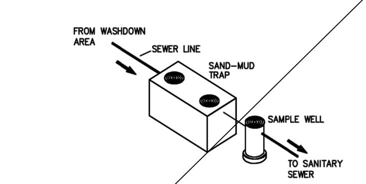

TYPICAL APPLICATIONS INCLUDE COMMERCIAL AND INDUSTRIAL LAUNDRY FACILITIES WHERE EXCESSIVE SAND & MUD MAY INTERFERE WITH THE PROPER DRAINAGE OF THE SEWER SYSTEM. THE SAND-MUD INTERCEPTOR IS GENERALLY BURIED BELOW GRADE FOR GRAVITY FLOW SEWER SYSTEMS. A SAMPLE WELL IS UTILIZED ON THE OUTLET SIDE FOR SAMPLING BY THE LOCAL WATER AUTHORITIY.

SAND-MUD INTERCEPTOR SCHEDULE

MODEL NO.	CAPACITY USGal	EMPTY WT (LBS)	LENGTH L	WIDTH W	HEIGHT H	INLET FL1	OUTLET FL2
SM–500	500	9,500	7'–10"	4'–4"	4'–6"	3'–3"	3'–0"
SM–750	750	9,900	7'–10"	4'–4"	6'–0"	4'–5"	4'–2"
SM–1000	1,000	13,350	8'–8"	5'–0"	6'–0"	4'–9"	4'–6"
SM–1250	1,250	14,650	9'–2"	5'–8"	6'–0"	4'–9"	4'–6"
SM–1500	1,500	16,050	9'–2"	5'–8"	7'–0"	5'–9"	5'–6"
SM–2000	2,000	21,250	9'–0"	6'–0"	8'–0"	6'–9"	6'–6"
SM–2500	2,500	27,050	13'–0"	7'–0"	7'–0"	5'–9"	5'–6"
SM–3000	3,000	33,150	13'–0"	7'–0"	8'–0"	6'–9"	6'–6"
SM–3500	3,500	38,550	13'–0"	7'–0"	8'–6"	7'–3"	7'–0"
SM–4000	4,000	38,100	16'–0"	8'–6"	7'–0"	5'–9"	5'–6"

OTHER SIZES ARE AVAILABLE. CONTACT US FOR MORE INFORMATION

SPECIFICATIONS

CONCRETE: CLASS I/II CONCRETE WITH DESIGN STRENGTH OF 4500 PSI AT 28 DAYS. UNIT IS OF MONOLITHIC CONSTRUCTION AT FLOOR, FIRST STAGE OF WALL AND BAFFLE WITH SECTIONAL RISER TO REQUIRED DEPTH. (MONOLITHIC BAFFLE REQUIRED, SLIDE-IN TYPE IS NOT ACCEPTABLE)

REINFORCEMENT: GRADE 60 REINFORCED WITH STEEL REBAR CONFORMING TO ASTM A615 ON REQUIRED CENTERS OR EQUAL.

C.I. CASTINGS: MANHOLE FRAMES, COVERS OR GRATES ARE MANUFACTURED OF GREY CAST IRON CONFORMING TO ASTM A48 CLASS 30. MANHOLE SHALL BE NOMINAL 24 INCH DIAMETER AND BE TRAFFIC DUTY.

ENGINEERING DATA

THE SAND & MUD INTERCEPTOR IS STRUCTURALLY & HYDRAULICALLY ENGINEERED TO CONFORM TO REGIONAL PLUMBING CODES RECOMMENDED IN MOST CITIES. CONSULT WITH LOCAL AUTHORITIES FOR SPECIFIC APPLICATION REQUIREMENTS.

SHOP DRAWINGS SHALL INCLUDE COMPLETE STRUCTURAL & BOUYANCY CALCULATIONS CERTIFIED BY A LICENSED PROFESSIONAL ENGINEER UPON REQUEST.

CONSULT WITH PARK ENVIRONMENTAL FOR EXACT EXCAVATION DIMENSIONS & SHIPPING INFORMATION.

9. SAND MUD INTERCEPTOR

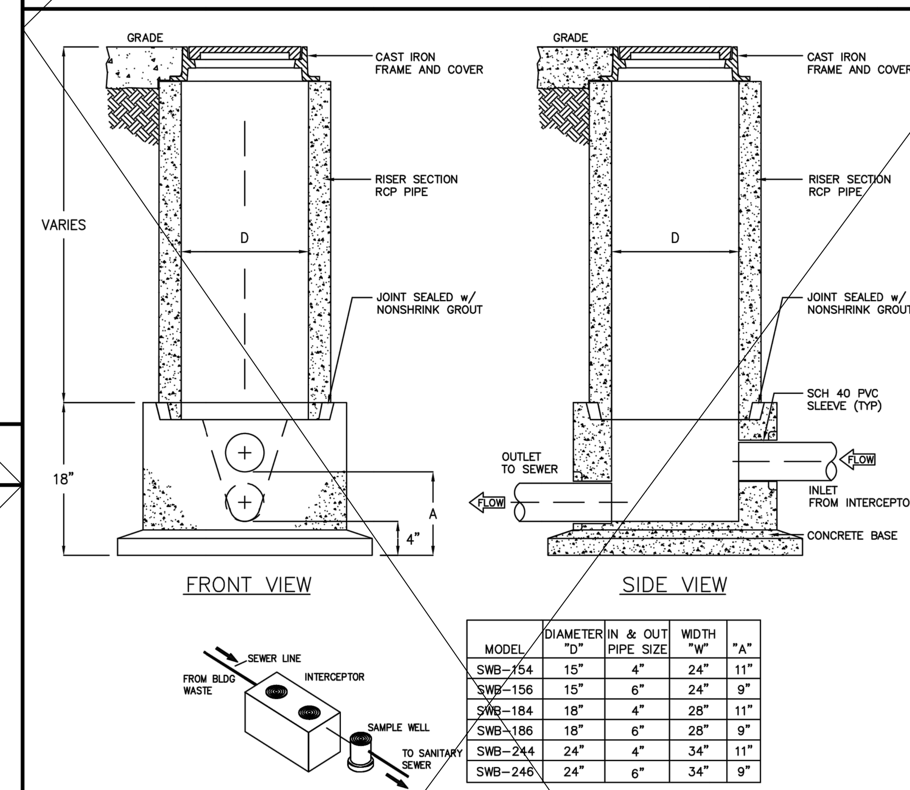

MODEL	DIAMETER "D"	IN & OUT PIPE SIZE	WIDTH "W"	"A"
SWB–154	15"	4"	24"	11"
SWB–156	15"	6"	24"	9"
SWB–184	18"	4"	28"	11"
SWB–186	18"	6"	28"	9"
SWB–244	24"	4"	34"	11"
SWB–246	24"	6"	34"	9"

NOTES

1. SAMPLING WELL MUST BE INSTALLED UNDER A SEPARATE PLUMBING PERMIT.
2. USE 15" T&G R.C.P. FOR INSTALLATION 6'-0" DEEP AND LESS.
3. USE 24" T&G R.C.P. FOR INSTALLATION GREATER THAN 6'-0" DEEP. (STD RING AND M.H. COVER REQUIRED).
4. SAMPLING WELL MUST BE SET IN A CIRCULAR OR SQUARE CONCRETE PAD (1'-0" GREATER THAN OUTSIDE DIAMETER OF PIPE).
5. INSIDE INSTALLATION NOT PERMITTED, WHERE OUTSIDE INSTALLATION IS POSSIBLE.
6. INSTALLATION INSIDE BLDG MUST BE POURED IN PLACE (15"MIN) NO CONCRETE PIPE IS PERMITTED, (AIR-TIGHT COVER REQUIRED).
7. LAWN INSTALLATION MUST BE 4" ABOVE FINISHED GRADE.
8. DRIVE & SIDEWALK INSTALLATION MUST BE BROUGHT TO FINISHED GRADE.
9. TO BE INSTALLED ON PRIVATE PROPERTY, IN AN ACCESSIBLE LOCATION TO CITY PERSONNEL.

SPECIFICATIONS

CONCRETE: Class I/II concrete with design strength of 4500 PSI at 28 days. Unit is of monolithic construction at floor and first stage of wall with sectional riser to required depth.

C.I. CASTINGS: Cast iron frames and grates are manufactured of grey cast iron conforming to ASTM A48-76 Class 30, Heavy-Duty AASHTO H-20

10. SAMPLING WELL

NO.	DATE	REVISIONS	APP.

CITY OF RICHMOND
STANDARD CONSTRUCTION DETAILS
SANITARY–1

SCALE		DESIGNED BY:	LLT
HORIZONTAL	1" = NTS	DRAWN BY:	TWB
VERTICAL	1" = NTS	CHECKED BY:	CBA
		DATE:	3/22/19
		JOB NO:	
		DWG. NO:	

R–4–19

Sheet:

FSGROUP ARCHITECTS
13105 Northwest Fwy Suite 1110
Houston Texas 77040
713 344 1752 Office
www.fsdesignbuild.com

PROJECT NAME

INFORMATION TECHNOLGY BUILDING
EUGENE HEIMANN CIRCLE
FORT BEND COUNTY . TEXAS

CONSULTANTS

ISANI CONSULTANTS L.P
ISANI civil \ design \ engineers
10448 WEST OFFICE DRIVE
HOUSTON, TEXAS 77042
T: (713) 747 2399
F: (713) 747 4797
TBPE FIRM REGISTRATION #4575

ISANI PROJECT NO: 23LD73

PROFESSIONAL SEAL

STATE OF TEXAS
RAM GULIANI
101094
LICENSED PROFESSIONAL ENGINEER
05/15/2024

ISSUED FOR
ISSUED FOR PROPOSAL AND PERMIT

REVISIONS

No.	DESCRIPTION	DATE

KEY PLAN

SHEET TITLE
CIVIL DETAILS - 3

SCALE
As indicated

DATE
05/15/2024

PROJECT NUMBER
2319

SHEET NUMBER
C6.03

FSGROUP®
ARCHITECTS
13105 Northwest Fwy Suite 1110
Houston Texas 77040
713 344 1752 Office
www.fsdesignbuild.com

PROJECT NAME

INFORMATION TECHNOLGY BUILDING
EUGENE HEIMANN CIRCLE
FORT BEND COUNTY . TEXAS

CONSULTANTS

ISANI CONSULTANTS L.P
ISANI
civil \ design \ engineers
10448 WEST OFFICE DRIVE
HOUSTON, TEXAS 77042
T: (713) 747 2399
F: (713) 747 4797
TBPE FIRM REGISTRATION #4575

ISANI PROJECT NO: 23LD73

PROFESSIONAL SEAL

STATE OF TEXAS
RAM GULIANI
101094
LICENSED
PROFESSIONAL ENGINEER
05/15/2024

ISSUED FOR
ISSUED FOR PROPOSAL AND PERMIT

REVISIONS

No.	DESCRIPTION	DATE

KEY PLAN

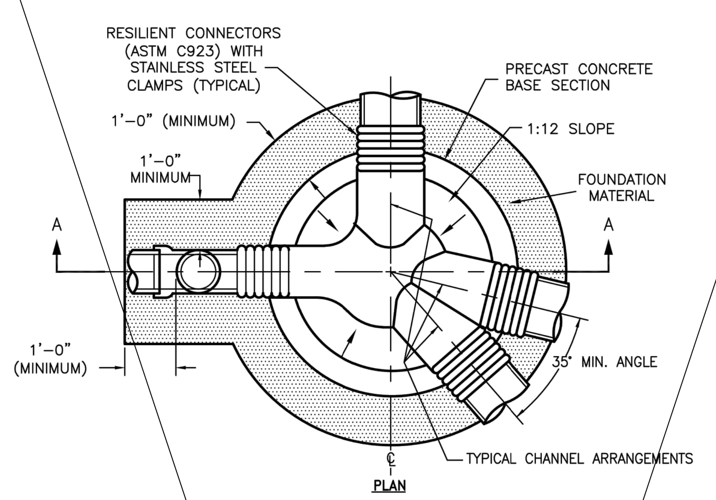

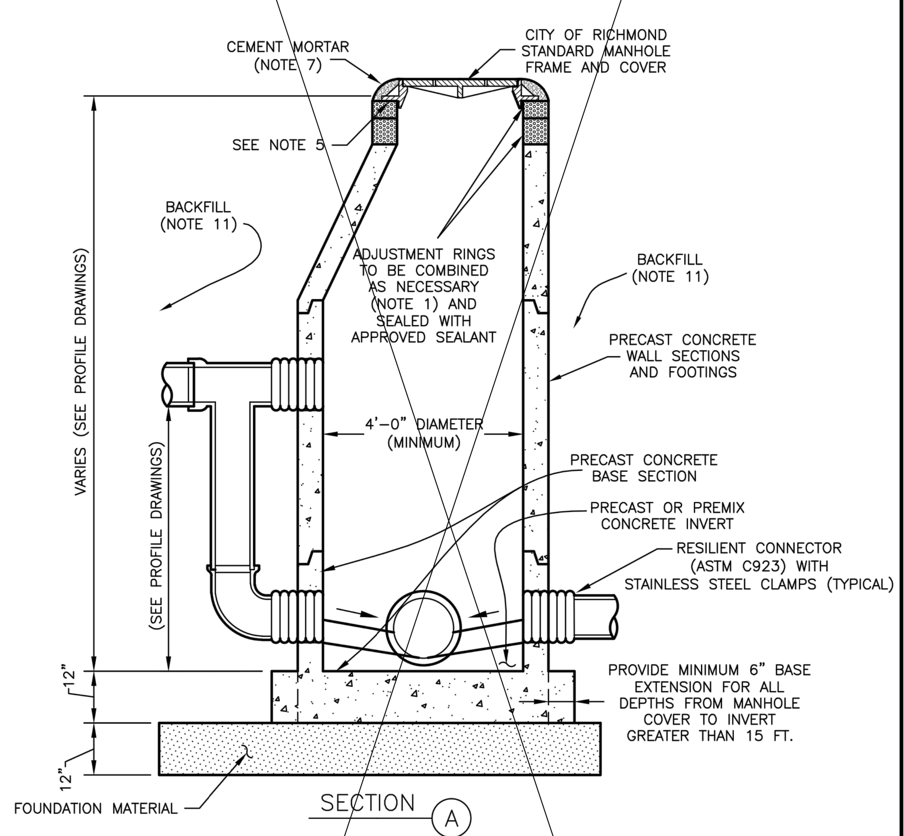

NOTES:

1. PRECAST CONCRETE RINGS SHALL BE PROVIDED FOR A COMBINED ADJUSTMENT HEIGHT OF AT LEAST 6". THE TOTAL HEIGHT OF THE ADJUSTMENT RINGS SHALL NOT EXCEED 12".
2. MANHOLE WALL THICKNESS FOR DEPTH EXCEEDING 12'-0" SHALL BE DETERMINED TO MEET AASHTO H-20 LOADING AND SOIL CONDITIONS OR AS OTHERWISE REQUIRED. MINIMUM THICKNESS 5".
3. MANHOLE DROP AND INTERSECTING PIPES SHALL BE INSTALLED WHEN CALLED FOR IN PLAN AND PROFILE DRAWING AND WHEN THE DROP ON INCOMING PIPE IS GREATER THAN 24".
4. NO INTERNAL DROPS PERMITTED, UNLESS APPROVED BY CITY.
5. SEAT MANHOLE FRAME USING AN APPROVED SEALANT.
6. ECCENTRIC PRECAST CONCRETE MANHOLE RISER SHALL BE USED, FOR DEPTHS GREATER THAN 8'.
7. OMIT CEMENT MORTAR WHEN MANHOLE IS LOCATED IN PAVED AREAS.
8. MINIMUM STEEL REINFORCING IN THE PRECAST CONCRETE BASE SHALL BE #5 @ 8" CENTERS EACH WAY.
9. PRECAST CONCRETE MANHOLES TO MEET ASTM C-478, CURRENT.
10. ALL JOINTS SHALL BE SEALED WITH RUBBER GASKETS (ASTM C443) OR APPROVED EQUAL.
11. BASE SHALL INCLUDE A 12" THICK CEMENT STABILIZED SAND BASE BENEATH THE STRUCTURE. ALTERNATE: USE CRUSHED STONE AND FILTER FABRIC IN WET TRENCH CONDITIONS.
12. BACKFILL AROUND MANHOLE & DROP CONNECTION WITH 2 SACKS OF CEMENT PER TON OF SAND (100 P.S.I. MINIMUM).
13. USE STANDARD CAST IRON FRAME AND COVER WITH THE WORDS "SANITARY – CITY OF RICHMOND".
14. MINIMUM 4000 P.S.I. CONCRETE TO BE USED FOR CAST-IN-PLACE (C.I.P.) CONCRETE BASE.
15. GROUT INSIDE AND OUTSIDE OF EXTENSION RING(S) AND FRAME.
16. ALL INTERIOR SURFACES SHALL BE COATED WITH IPAGARD EPOXY, THANECOAT FE100 OR APPROVED EQUAL, APPLIED IN ACCORDANCE WITH THE MANUFACTURER'S RECOMMENDATION (40 MIL MINIMUM THICKNESS)
17. MANHOLES SHALL BE CONSTRUCTED USING PRECAST REINFORCED CONCRETE MANHOLE SECTIONS, CONE AND BOTTOM. BRICK WILL NOT BE ALLOWED.
18. MANHOLE INVERT TO BE CUT INTO OR ADD TO MANHOLE BASE WHEN A SERVICE CONNECTION IS ADDED.

1. SANITARY SEWER MANHOLE

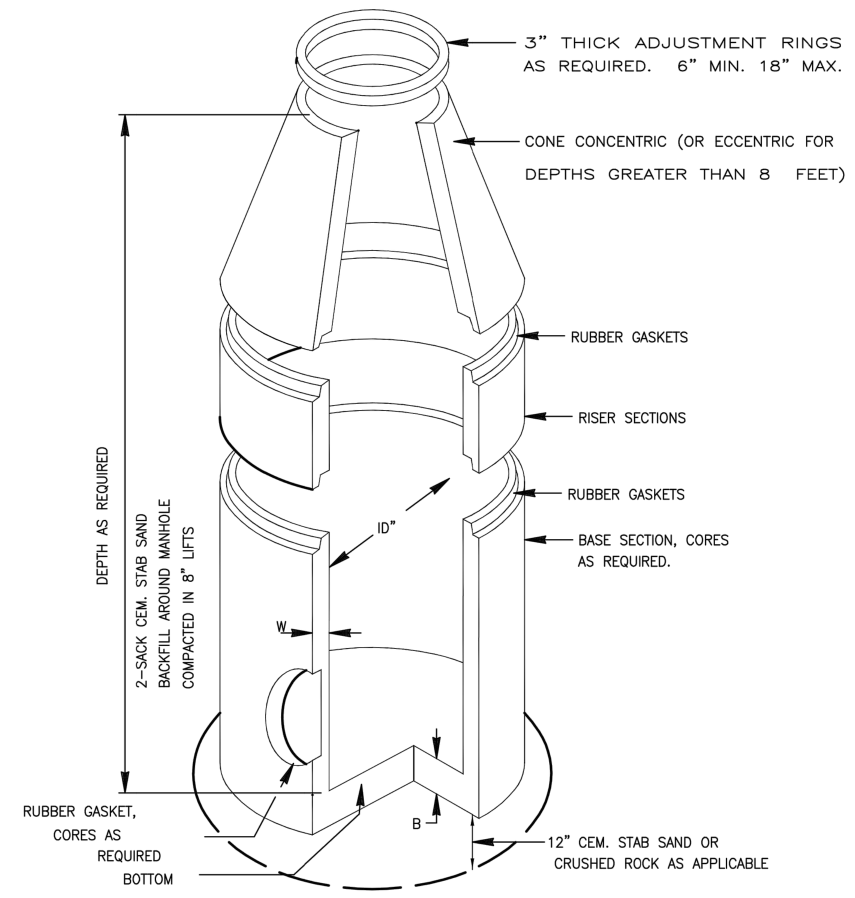

NOTES

1. LIFTING INSERTS AS REQUIRED.
2. ALL JOINTS SHALL BE SEALED WITH APPROVED RUBBER GASKET.
3. STRUCTURE TO BE PLACED ON 12" STABILIZED BASE.
4. C.S.S. SHALL BE BROUGHT TO WITHIN 2-FT OF TOP OF MANHOLE.
5. PRE-CAST MANHOLE SHALL BE IN COMPLIANCE WITH APPROVED PRODUCT LIST.
6. THANE COAT SHALL BE IN COMPLIANCE WITH APPROVED PRODUCT LIST.
7. INVERTS SHALL COMPLY WITH C.O.M.C., INFRASTRUCTURE DESIGN MANUAL SPECIFICATIONS.
8. INFLOW PROTECTORS REQUIRED ON ALL SANITARY MANHOLES.
9. REFER TO SANITARY MANHOLE LIDS, C.S.S. NOTES, MODIFIED BEDDING DETAILS AND NOTES.

2. PRECAST SANITARY MANHOLE

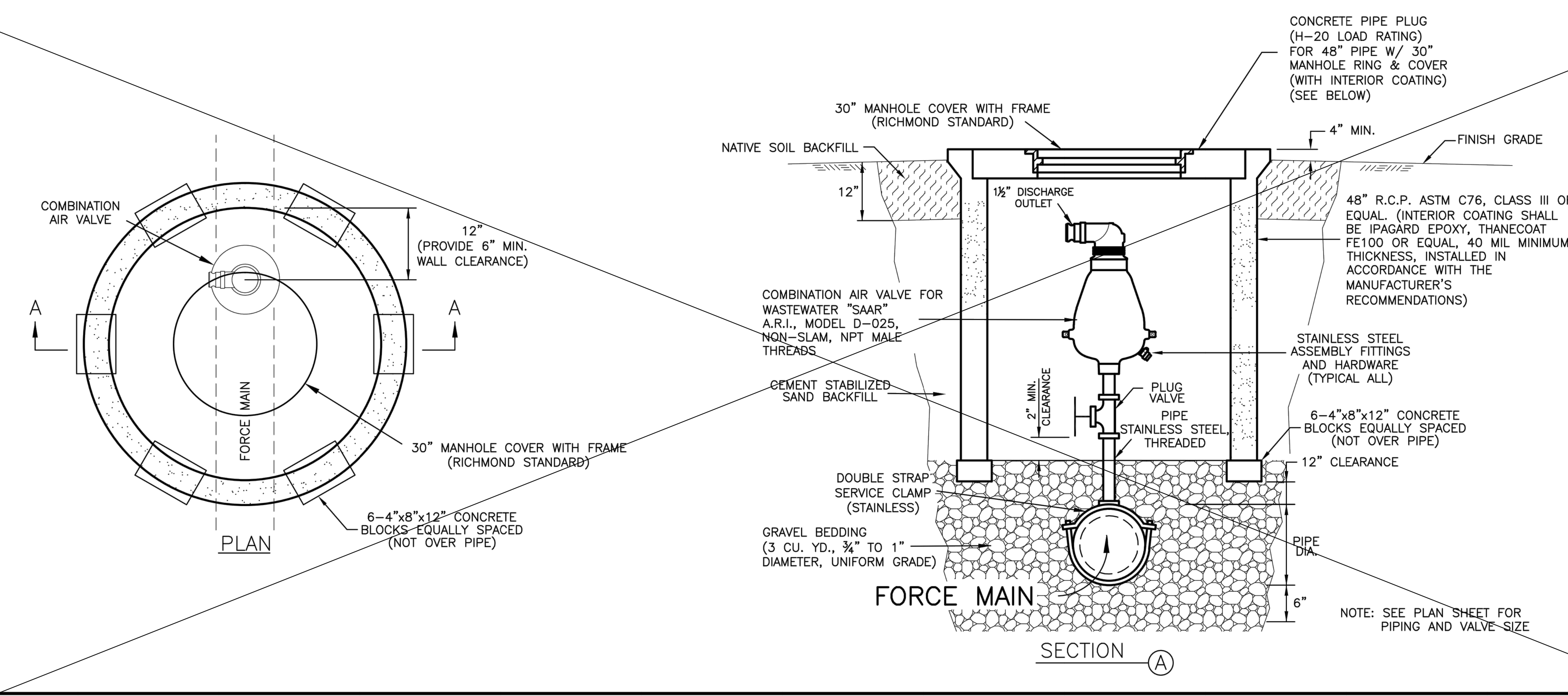

3. SEWERAGE AIR RELEASE VALVE MANHOLE

NO.	DATE	REVISIONS	APP.

CITY OF RICHMOND
STANDARD CONSTRUCTION DETAILS
SANITARY-2

SCALE		DESIGNED BY:	LLT
HORIZONTAL	1" = NTS	DRAWN BY:	TWB
VERTICAL	1" = NTS	CHECKED BY:	CBA
		DATE:	3/22/19
		JOB NO:	
		DWG. NO:	

R-5-19
Sheet:

File Name:W:\Details\Richmond\2019 COR STANDARD\R-5-19 - Sanitary.dwg Plot date: Tuesday, March 19, 2019 9:47:59 AM
Layout Tab:R-5-17 SAN
Save date: Tuesday, March 19, 2019 9:35:08 AM

SHEET TITLE
CIVIL DETAILS - 4

SCALE
As indicated

DATE
05/15/2024

PROJECT NUMBER
2319

SHEET NUMBER
C6.04

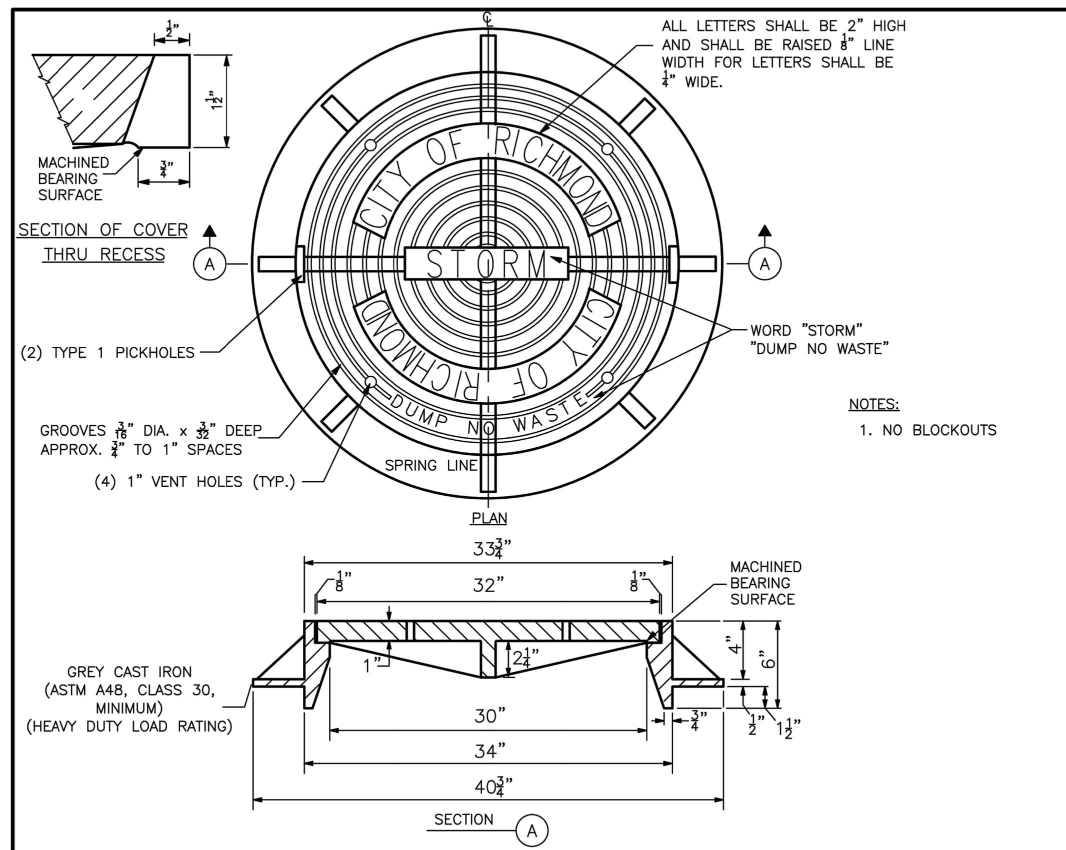

1. MANHOLE AND INLET FRAME AND COVER

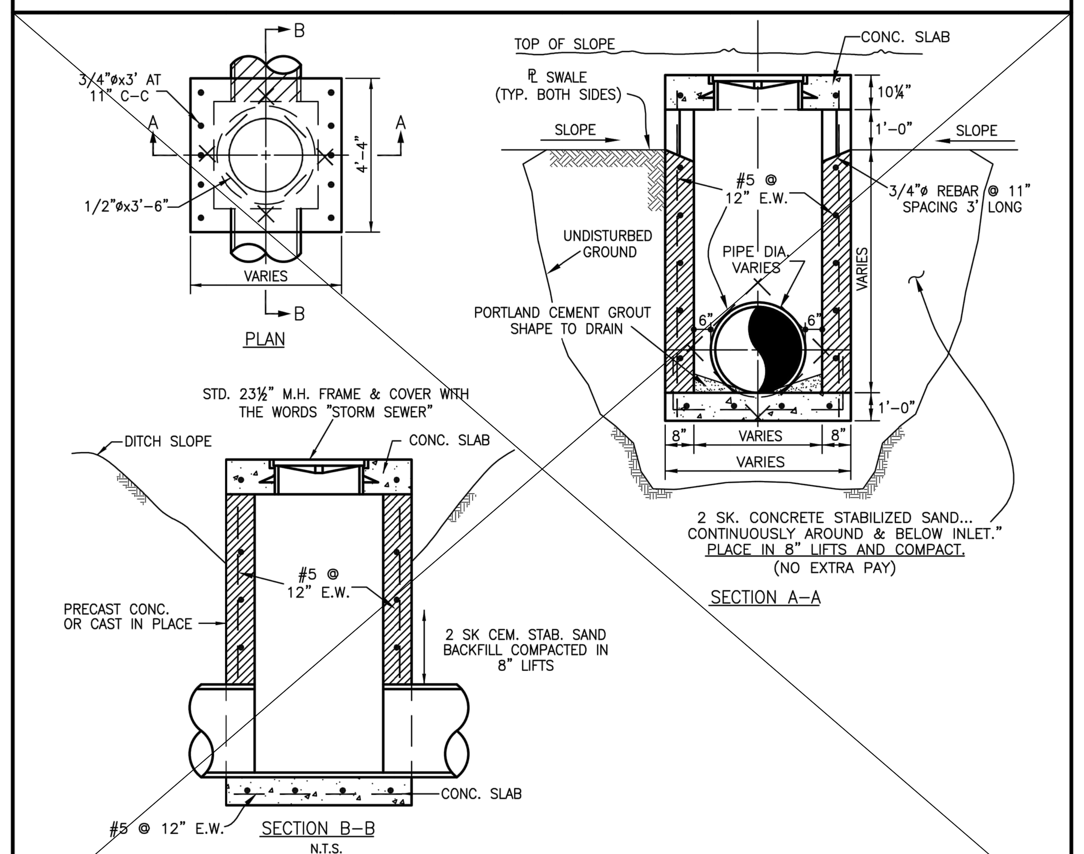

2. TYPE 'E' INLET

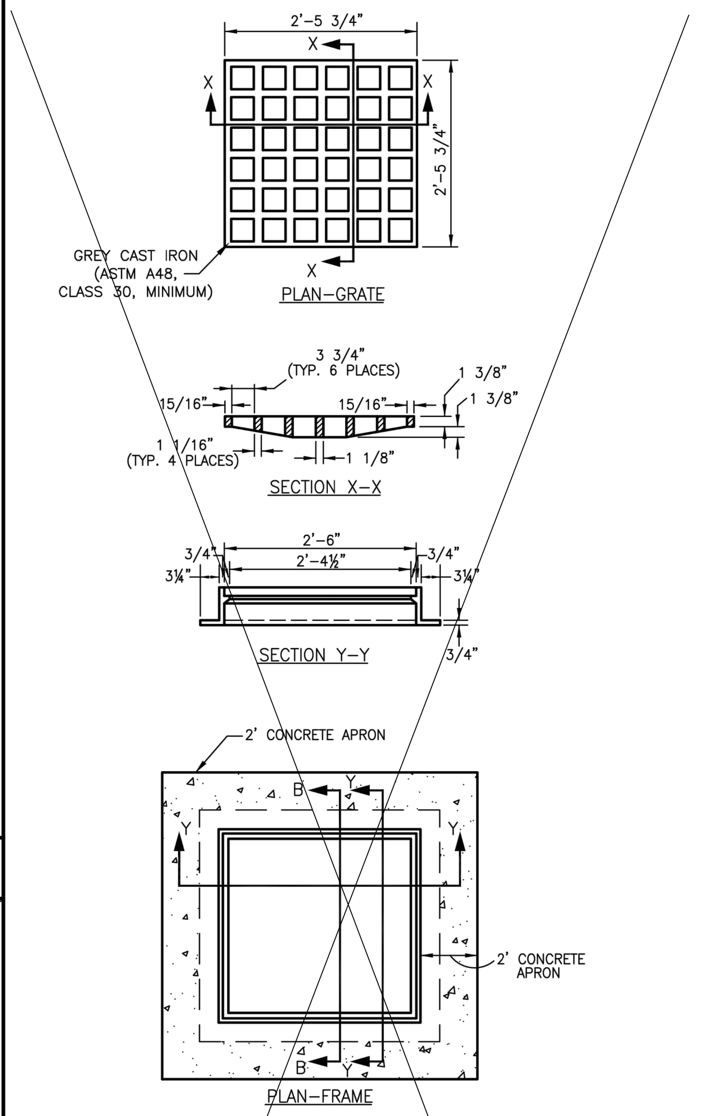

NOTES
1. INLETS TO BE PRECAST OR CAST IN PLACE ONLY.

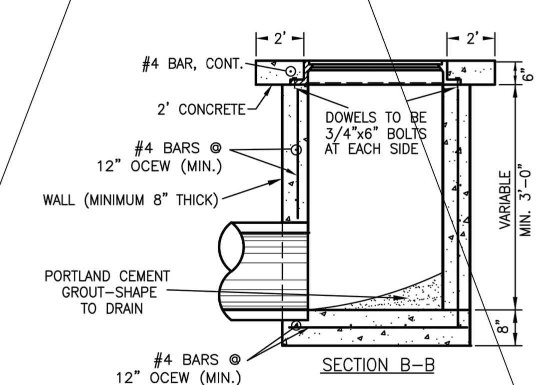

3. TYPE 'A' INLET

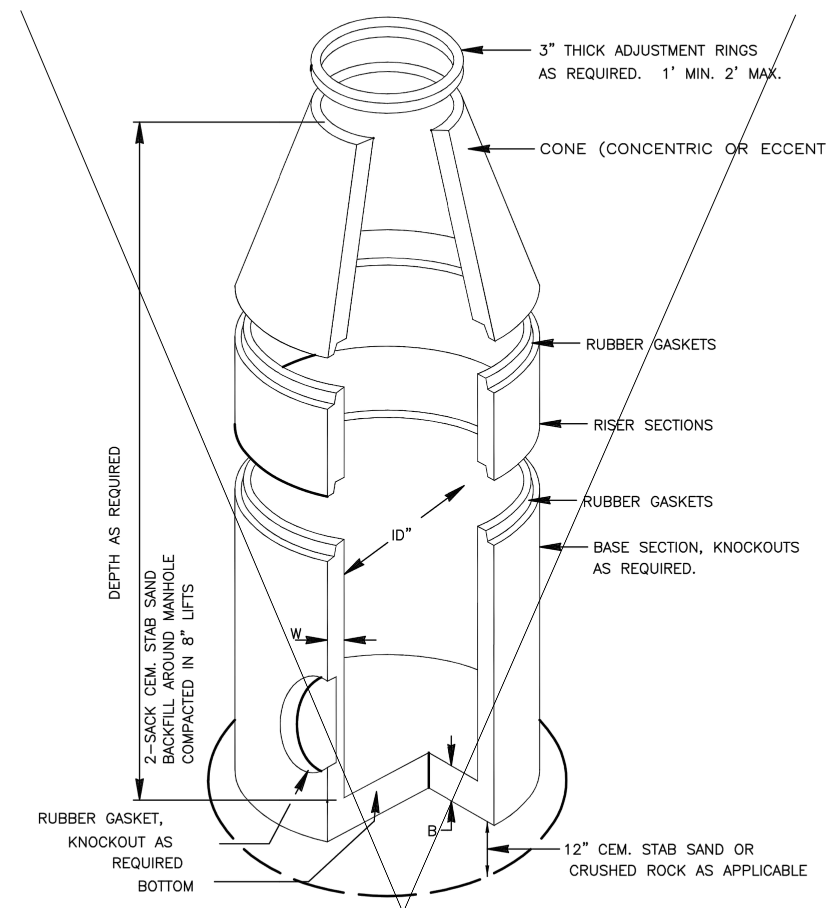

SPECIFICATIONS:

CONCRETE: CLASS 1 CONCRETE WITH A DESIGN STRENGTH OF 4500 PSI AT 28 DAYS. RATES FOR H–20 LOADING.

REINFORCEMENT: STRUCTURAL REINFORCEMENT CONFORMING TO ASTM–C–478.

C.I. CASTINGS: CAST IRON FRAMES AND GRATES ARE MANUFACTURED OF GREY CAST IRON CONFORMING TO ASTM A48–76 CLASS 35.

DIMENSIONS AND WEIGHTS

I.D. SIZE (in)	W (in)	B (in)	RISER WT/LF (lb)
48	5	6	868
60	6	8	1300
72	7	8	1811
96	9	8	3090

NOTES
1. LIFTING INSERTS AS REQUIRED.
2. ALL JOINTS SHALL BE SEALED WITH APPROVED RUBBER GASKET
3. STRUCTURE TO BE PLACED ON 12" STABILIZED BASE.
4. C.S.S. SHALL BE BROUGHT TO WITHIN 2–FT OF TOP OF MANHOLE.

4. PRECAST CONCRETE MANHOLE

TABLE
SEWER SIZE
VS
MANHOLE SIZE

SEWER SIZE	MANHOLE BASE DIAMETER
42"	5'–0"
36"	4'–6"
30" AND LESS	4'–0"

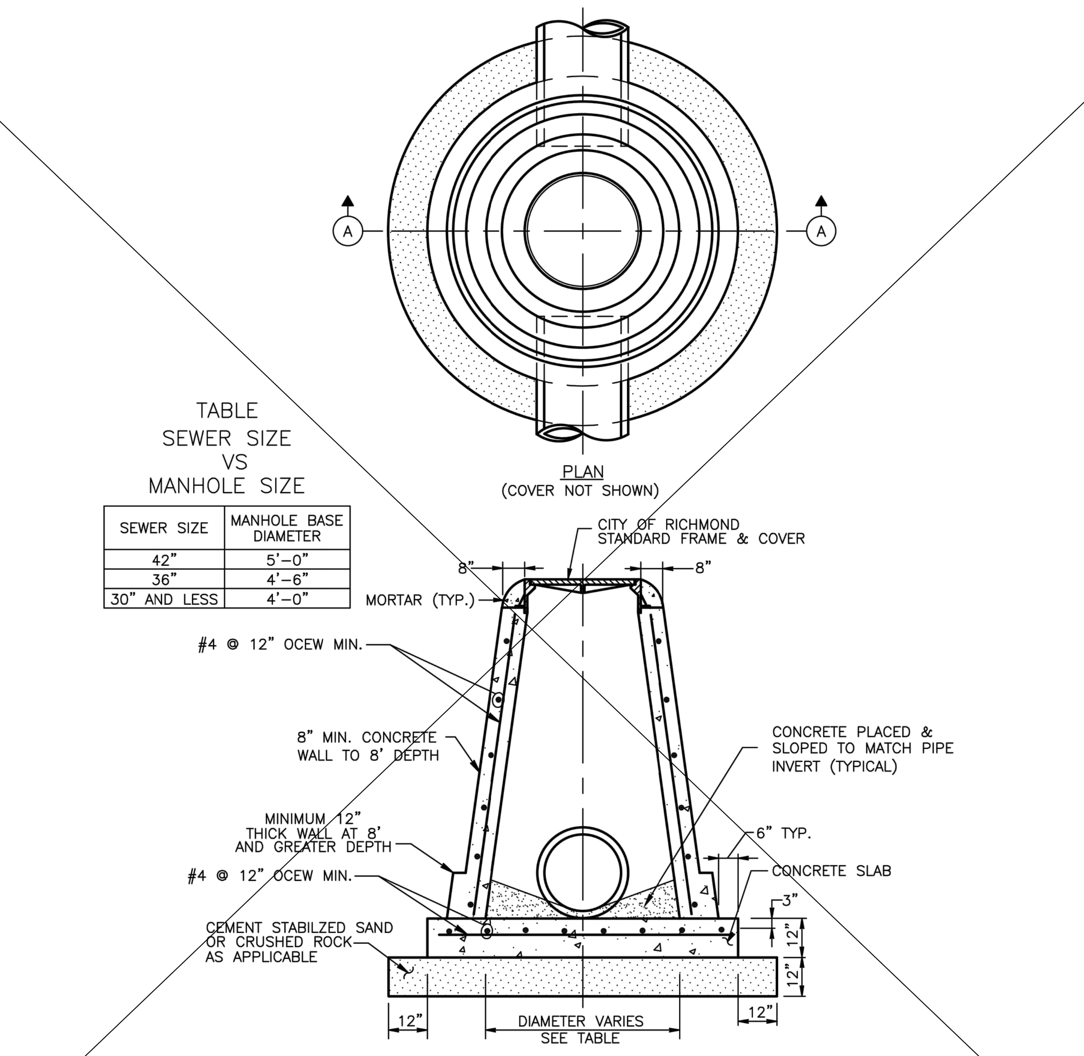

NOTES:
1. ALL BACKFILL WITHIN 2 FEET OF THE MANHOLE AND WITHIN 4 FEET OF THE TOP RIM ELEVATION SHALL BE CEMENT STABILIZED SAND (SEE BEDDING DETAIL).
2. BACKFILL UNDER AND WITHIN 3 FEET OF PAVING SHALL MEET THE BACKFILL REQUIREMENTS FOR STORM SEWERS.
3. MANHOLE TO BE PRECAST OR CAST IN PLACE. BRICK MAY ONLY BE USED WITH CITY APPROVAL.

5. MANHOLE TYPE "C" FOR 42" DIA. R.C.P. AND SMALLER

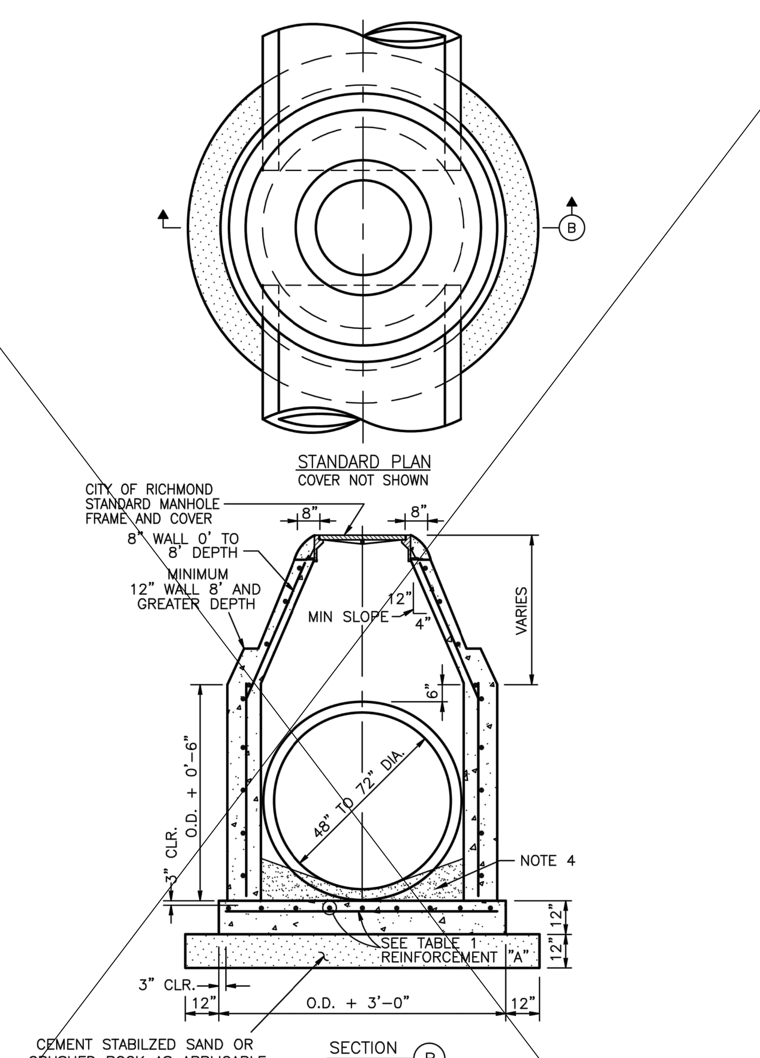

TABLE 1
DATA FOR VARIOUS PIPE DIAMETERS

PIPE DIA. (INCHES)	MIN. DEPTH	REINFORCEMENT ("A")	REINFORCEMENT ("B")
48"	8'–0"	#5 @ 12 E.W.	2–#6
54"	9'–4"	#5 @ 10 E.W.	2–#6
60"	10'–7"	#5 @ 8 E.W.	2–#7
66"	11'–10"	#5 @ 7 E.W.	2–#7
72"	13'–2"	#5 @ 6 E.W.	2–#7

NOTES:
1. ALL BACKFILL WITHIN 2 FEET OF THE MANHOLE AND WITHIN 4 FEET OF THE TOP RIM ELEVATION SHALL BE CEMENT STABILIZED BACKFILL (SEE BEDDING DETAIL).
2. BACKFILL UNDER AND WITHIN 3 FEET OF PAVING SHALL MEET THE BACKFILL REQUIREMENTS FOR STORM SEWERS.
3. PORTLAND CEMENT GROUT TO MATCH INVERT OF PIPE.
4. CAST IN PLACE ONLY. BRICK MAY ONLY BE USED WITH CITY APPROVAL.

7. TYPE "C" MANHOLE FOR 48" TO 72" DIA. R.C.P.

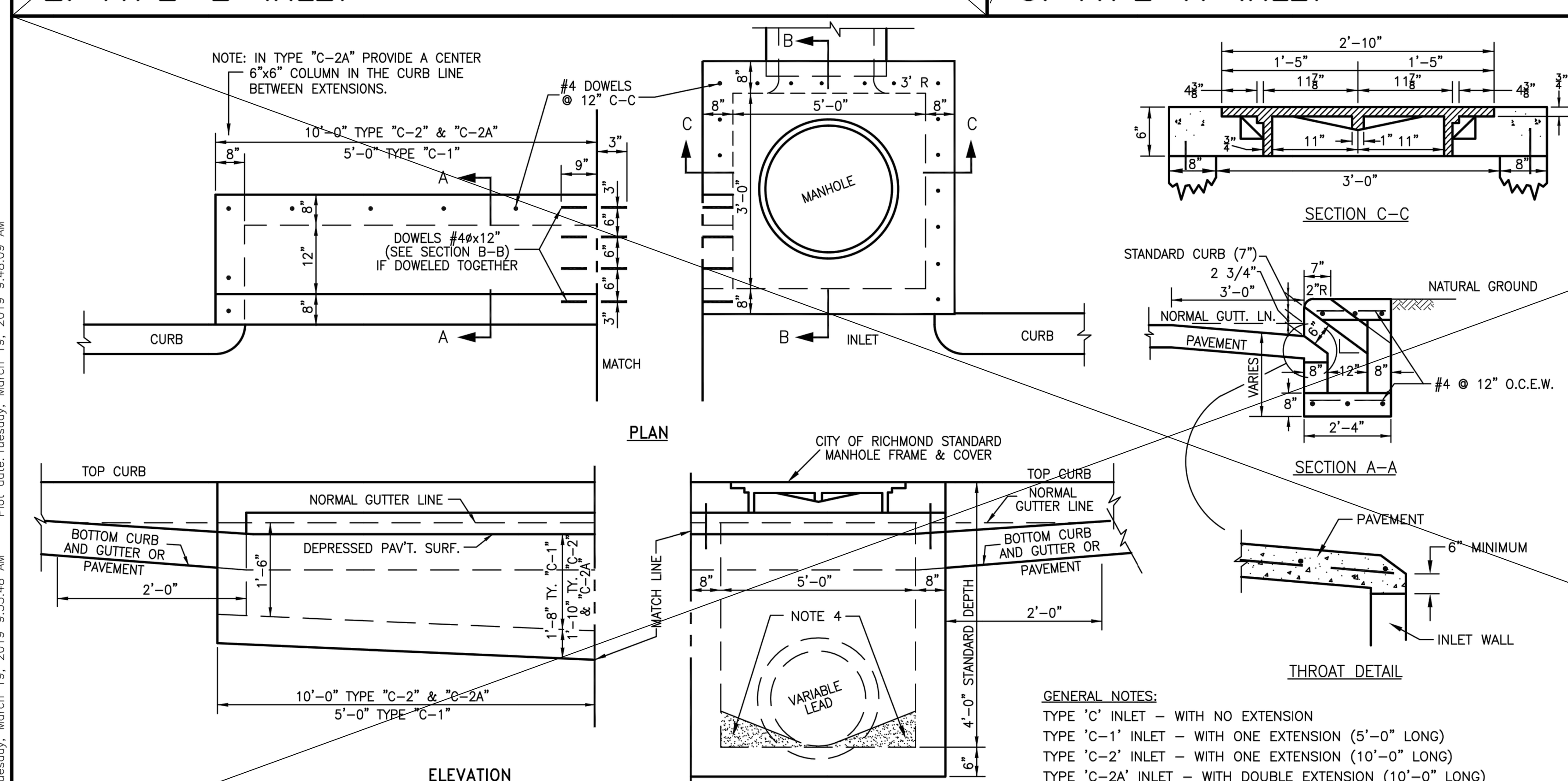

GENERAL NOTES:
TYPE 'C' INLET – WITH NO EXTENSION
TYPE 'C–1' INLET – WITH ONE EXTENSION (5'–0" LONG)
TYPE 'C–2' INLET – WITH ONE EXTENSION (10'–0" LONG)
TYPE 'C–2A' INLET – WITH DOUBLE EXTENSION (10'–0" LONG)

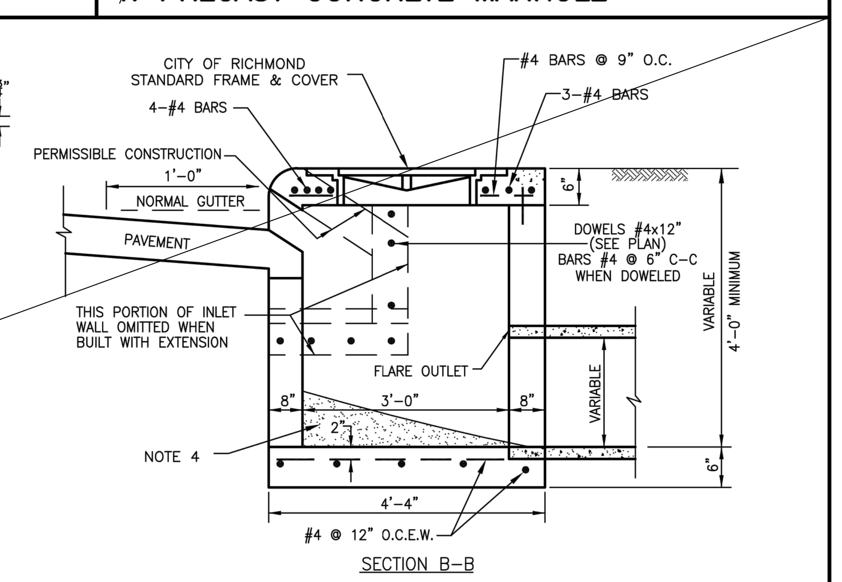

NOTES:
1. FOR TYPE 'C–2A' INLETS PROVIDE A CENTER 6"x6" COLUMN IN THE CURB LINE BETWEEN ALL EXTENSIONS.
2. CEMENT STABILIZED SAND BACKFILL SHALL BE PLACED A MINIMUM OF 6 INCHES BELOW INLET AND A MINIMUM OF 12 INCHES AROUND INLET TO THE TOP OF STAGE 1 STRUCTURE.
3. ALTERNATIVE REINFORCED CONCRETE WALLS SHALL BE A MINIMUM OF 6" THICK WITH #4 @ 9" O.C.
4. CONCRETE PLACED AND SHAPED TO DRAIN.
5. PRECAST OR CAST IN PLACE ONLY.

6. TYPE 'C' INLET

GENERAL CONSTRUCTION NOTES:

1. ALL CAST CONCRETE BASES SHALL HAVE #4 REBAR @ 12" C–C EW.
2. CONCRETE SHALL BE 3500 PSI MIN.
3. USE C.S.S. BEDDING AS PER DETAILS 2 SK, COMPACTED 8" LIFTS (MAX.), TO 95% STANDARD.

NOTE:

STORM MANHOLES AND INLETS SHALL BE PRECAST CONCRETE. POURED IN PLACE, REINFORCED CONCRETE STRUCTURES MAY BE SUBSTITUTED WHEN THE PROPOSED CONSTRUCTION DETAIL IS SUBMITTED BY THE DESIGN ENGINEER FOR APPROVAL BY THE CITY.

A 4000 psi COLLAR IS REQUIRED TO BRIDGE A 3" OR LARGER GAP, DEFFLECTION OR CONNECTION OF DIFFERENT SIZE PIPES. THE COLLAR WILL BE 6" THICK 2 FT WIDE MIN. WITH #4 REBAR DOWELED INTO THE PIPE AND STRUCTURE. FOR A PIPE CONNECTION TO A MANHOLE OR BOX, THE COLLAR WILL BE 1 FOOT WIDE ON THE OUTSIDE OF THE STRUCTURE AND SEALED SMOOTHLY ON THE INSIDE OF THE STRUCTURE WITH NON–SHRINK GROUT.

NO.	DATE	REVISIONS	APP.

CITY OF RICHMOND
STANDARD CONSTRUCTION DETAILS
STORM SEWER–1

SCALE			
HORIZONTAL	1" = NTS	DESIGNED BY:	LLT
VERTICAL	1" = NTS	DRAWN BY:	TWB
		CHECKED BY:	CBA
		DATE:	3/22/19
		JOB NO:	
		DWG. NO:	

R–6–19
Sheet:

FSGROUP® ARCHITECTS
13105 Northwest Fwy Suite 1110
Houston Texas 77040
713 344 1752 Office
www.fsdesignbuild.com

PROJECT NAME

INFORMATION TECHNOLGY BUILDING
EUGENE HEIMANN CIRCLE
FORT BEND COUNTY . TEXAS

CONSULTANTS

ISANI CONSULTANTS L.P
ISANI civil \ design \ engineers
10448 WEST OFFICE DRIVE
HOUSTON, TEXAS 77042
T: (713) 747 2399
F: (713) 747 4797
TBPE FIRM REGISTRATION #4575

ISANI PROJECT NO: 23LD73

PROFESSIONAL SEAL

STATE OF TEXAS
RAM GULIANI
101094
LICENSED
PROFESSIONAL ENGINEER
05/15/2024

ISSUED FOR
ISSUED FOR PROPOSAL AND PERMIT

REVISIONS

No.	DESCRIPTION	DATE

KEY PLAN

SHEET TITLE
CIVIL DETAILS - 5

SCALE
As indicated

DATE
05/15/2024

PROJECT NUMBER
2319

SHEET NUMBER
C6.05

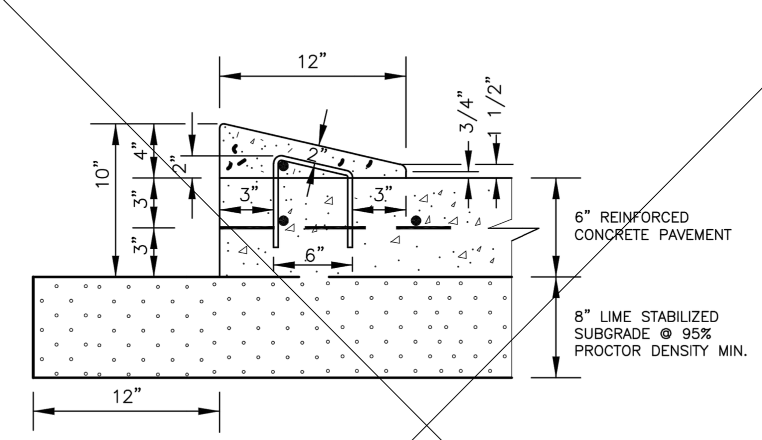

NOTES:

1.) #3 RE-BAR STIRRUPS TO BE PLACED AT INTERVALS OF 2' (FT) C-C.
2.) #4 RE-BAR LONGITUDINAL SHALL BE TIED TO EACH STIRRUP
3.) MOUNTABLE CURB ONLY ALLOWED ON ≤ 41' (FT), UNDIVIDED, RESIDENTIAL ROADWAYS WITHIN SUBDIVISIONS.

1. 4"X12" MOUNTABLE CONCRETE CURB

4"x12" MOUNTABLE CONCRETE CURB AND TRANSITION CURB NOTES:

1. 6-INCH CONCRETE CURB TO BE CONSTRUCTED ON ALL ESPLANADES, ISLANDS AND NON-RESIDENTIAL STREETS. RESIDENTIAL STREETS MAY BE CONSTRUCTED WITH EITHER 6-INCH CONCRETE CURB OR 4-INCH x 12-INCH CONCRETE CURB AS NOTED ON PLANS.
2. ALL 4-INCH x 12-INCH CONCRETE CURBS TO BE POURED SEPARATE FROM PROPOSED CONCRETE PAVEMENT.
3. TRANSITIONS FROM 6-INCH CONCRETE CURB TO 4-INCH x 12-INCH CONCRETE CURB TO BE ACCOMPLISHED WITHIN 5 FEET (TYP.), UNLESS OTHERWISE SHOWN. REINFORCING STEEL AS SHOWN IN "4-INCH x 12-INCH TRANSITION CURB" DETAIL IS TO BE INSTALLED.

NOTES FOR DETAILS 1 & 2

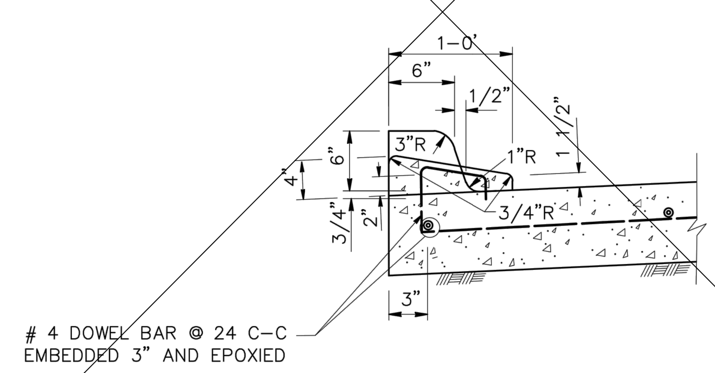

2. 4"X12" TRANSITION CURB

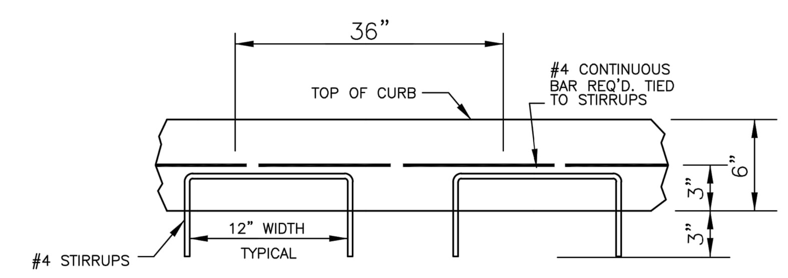

3. TYPICAL CONCRETE CURB REINFORCING

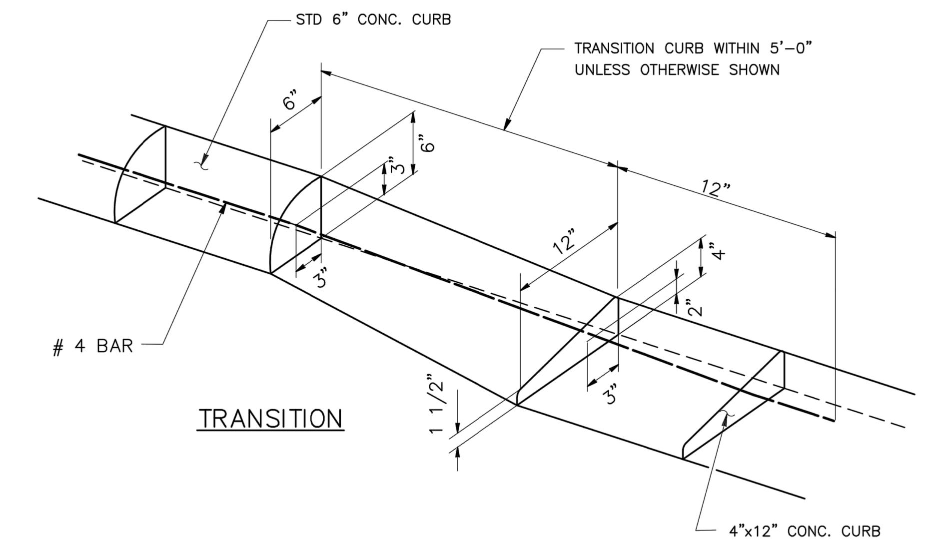

4. TYPICAL CURB TRANSITION

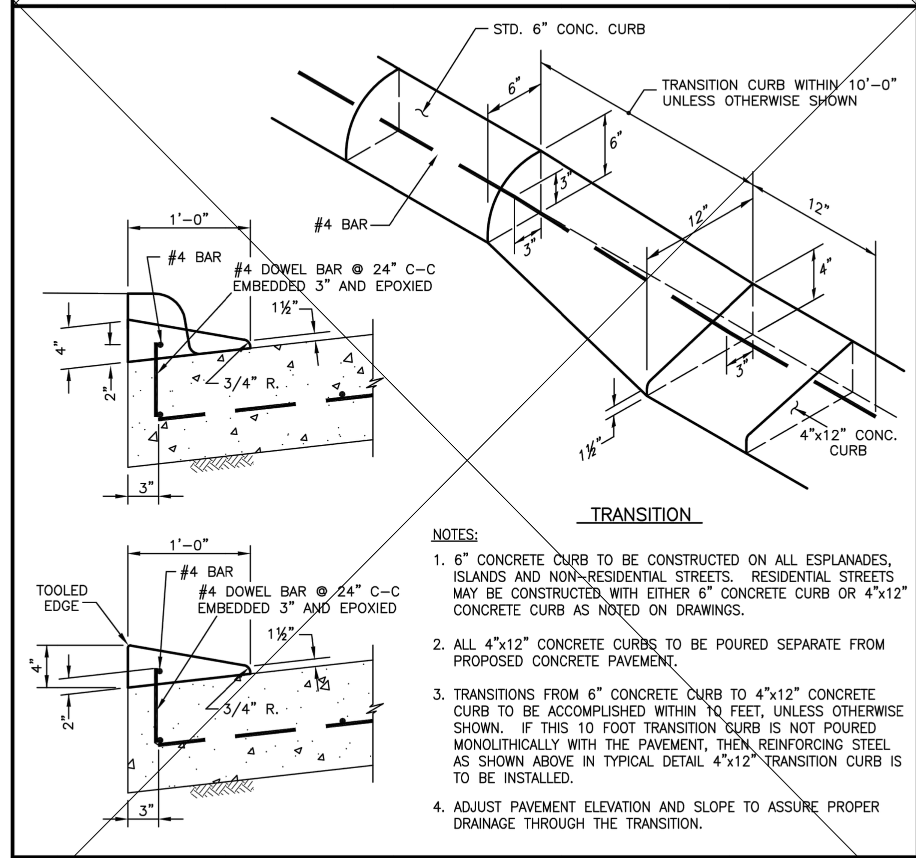

NOTES:

1. 6" CONCRETE CURB TO BE CONSTRUCTED ON ALL ESPLANADES, ISLANDS AND NON-RESIDENTIAL STREETS. RESIDENTIAL STREETS MAY BE CONSTRUCTED WITH EITHER 6" CONCRETE CURB OR 4"x12" CONCRETE CURB AS NOTED ON DRAWINGS.
2. ALL 4"x12" CONCRETE CURBS TO BE POURED SEPARATE FROM PROPOSED CONCRETE PAVEMENT.
3. TRANSITIONS FROM 6" CONCRETE CURB TO 4"x12" CONCRETE CURB TO BE ACCOMPLISHED WITHIN 10 FEET, UNLESS OTHERWISE SHOWN. IF THIS 10 FOOT TRANSITION CURB IS NOT POURED MONOLITHICALLY WITH THE PAVEMENT, THEN REINFORCING STEEL AS SHOWN ABOVE IN TYPICAL DETAIL 4"x12" TRANSITION CURB IS TO BE INSTALLED.
4. ADJUST PAVEMENT ELEVATION AND SLOPE TO ASSURE PROPER DRAINAGE THROUGH THE TRANSITION.

5. 4"X12" TRANSITION CURB

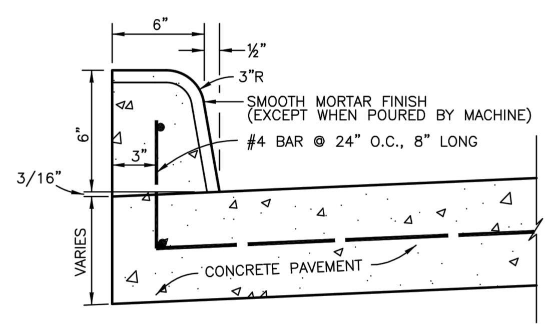

NOTES:

1. MORTAR FINISH NOT REQUIRED WHEN CURB IS POURED BY A MACHINE, BUT CURB SHALL HAVE THE SAME OUTSIDE DIMENSIONS.
2. WHEN CONCRETE CURB IS TO BE PLACED ON EXISTING CONCRETE BASE, USE #4 DEFORMED BARS, 8" LONG, 24" O.C., DOWELLED, AND SET IN QUICK SETTING CEMENT GROUT.
3. REDWOOD EXPANSION JOINTS SHALL BE INSTALLED AT ALL PAVEMENT EXPANSION JOINTS.

6. CONCRETE CURB

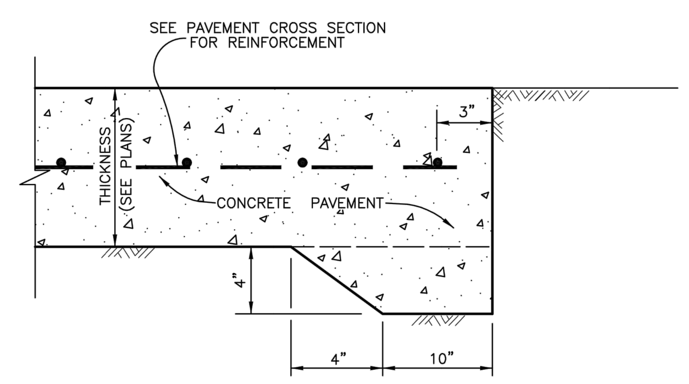

7. PAVEMENT HEADER

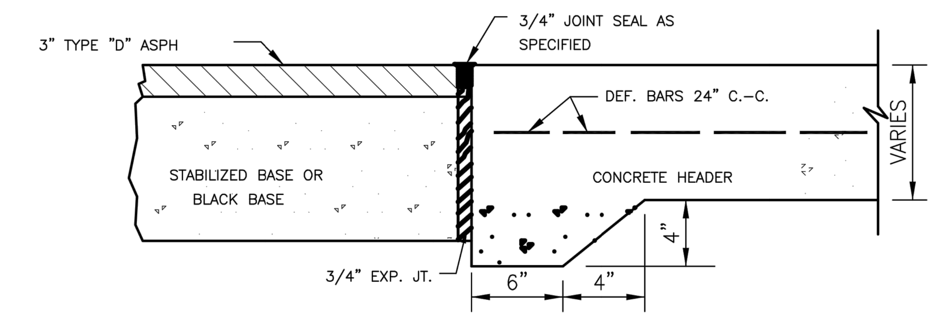

8. PAVEMENT HEADER FOR CONNECTING CONCRETE TO ASPHALT

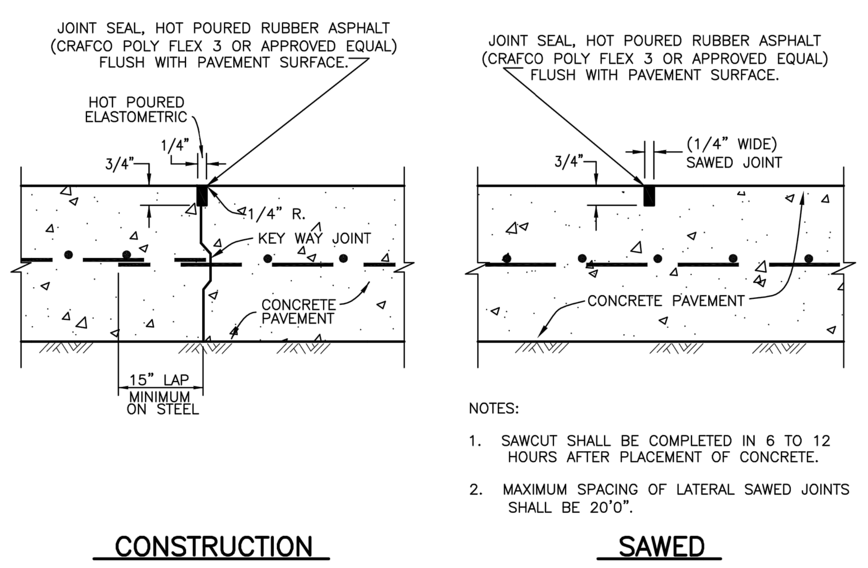

NOTES:

1. SAWCUT SHALL BE COMPLETED IN 6 TO 12 HOURS AFTER PLACEMENT OF CONCRETE.
2. MAXIMUM SPACING OF LATERAL SAWED JOINTS SHALL BE 20'0".

SAWED

9. PAVEMENT JOINTS

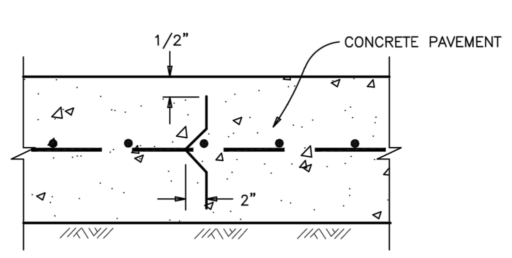

NOTES:

1. THE LOCATION OF DEFORMED STRIPS MAY BE VARIED, WITH THE APPROVAL OF THE CITY. MAXIMUM LONGITUDINAL SPACING FOR DEFORMED STRIPS SHALL BE 14'-0". DEFORMED METAL STRIPS SHALL BE PLACED VERTICALLY ALONG A STRAIGHT ALIGNMENT.

10. DEFORMED METAL STRIP

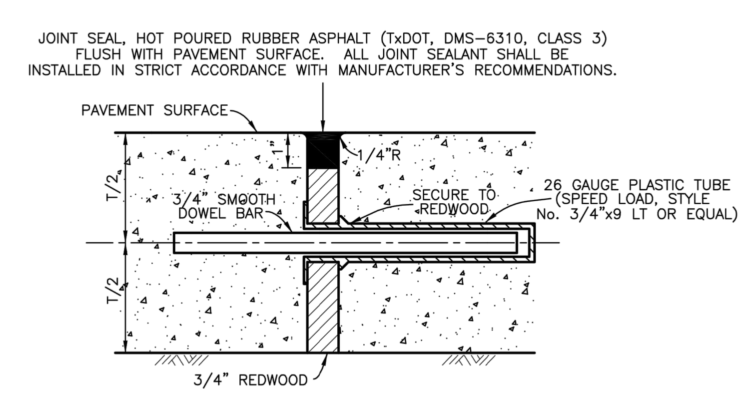

NOTES:

1. EXPANSION JOINT TO BE PLACED AT THE END OF EACH CURB RADIUS AND SPACED A MAXIMUM OF 60'-0" APART.
2. STAKES FOR TRANSVERSE JOINTS SHALL NOT BE PLACED CLOSER THAN 6" TO A LONGITUDINAL JOINT. THE TOP OF EACH STAKE SHALL NOT BE LESS THAN 2" BELOW THE FINISHED SURFACE.
3. DOWEL SHALL BE SECURED IN A HORIZONTAL ALIGNMENT PRIOR TO POURING CONCRETE.
4. INSTALL BACKER RODS (TxDOT, DMS-6310) IN ACCORDANCE WITH SEALANT MANUFACTURER'S RECOMMENDATIONS.
5. NO EXPANSION JOINT SHALL BE INSTALLED WITHIN TWO FEET (2') FROM AN INLET OPENING.

11. DOWEL TYPE EXPANSION JOINT

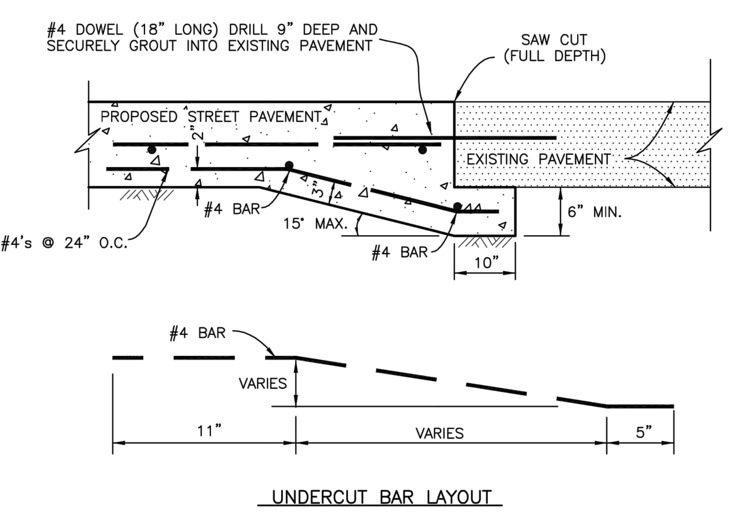

UNDERCUT BAR LAYOUT

NOTES:

1. PAVEMENT UNDERCUT TO BE USED WHEN NO SUBGRADE STABILIZATION EXIST UNDER EXISTING PAVEMENT.

12. PAVEMENT UNDERCUT

NO.	DATE	REVISIONS	APP.

CITY OF RICHMOND
STANDARD CONSTRUCTION DETAILS
PAVING-1

SCALE		DESIGNED BY: LLT
HORIZONTAL	1" = NTS	DRAWN BY: TWB
VERTICAL	1" = NTS	CHECKED BY: CBA
		DATE: 3/22/19
		JOB NO:
		DWG. NO:

R-9-19

Sheet:

FSGROUP ARCHITECTS
13105 Northwest Fwy Suite 1110
Houston Texas 77040
713 344 1752 Office
www.fsdesignbuild.com

PROJECT NAME

INFORMATION TECHNOLGY BUILDING
EUGENE HEIMANN CIRCLE
FORT BEND COUNTY . TEXAS

CONSULTANTS

ISANI CONSULTANTS L.P
ISANI civil \ design \ engineers
10448 WEST OFFICE DRIVE
HOUSTON, TEXAS 77042
T: (713) 747 2399
F: (713) 747 4797
TBPE FIRM REGISTRATION #4575

ISANI PROJECT NO: 23LD73

PROFESSIONAL SEAL

STATE OF TEXAS
RAM GULIANI
101094
LICENSED
PROFESSIONAL ENGINEER
05/15/2024

ISSUED FOR

ISSUED FOR PROPOSAL AND PERMIT

REVISIONS

No.	DESCRIPTION	DATE

KEY PLAN

SHEET TITLE

CIVIL DETAILS - 6

SCALE As indicated

DATE 05/15/2024

PROJECT NUMBER 2319

SHEET NUMBER

C6.06

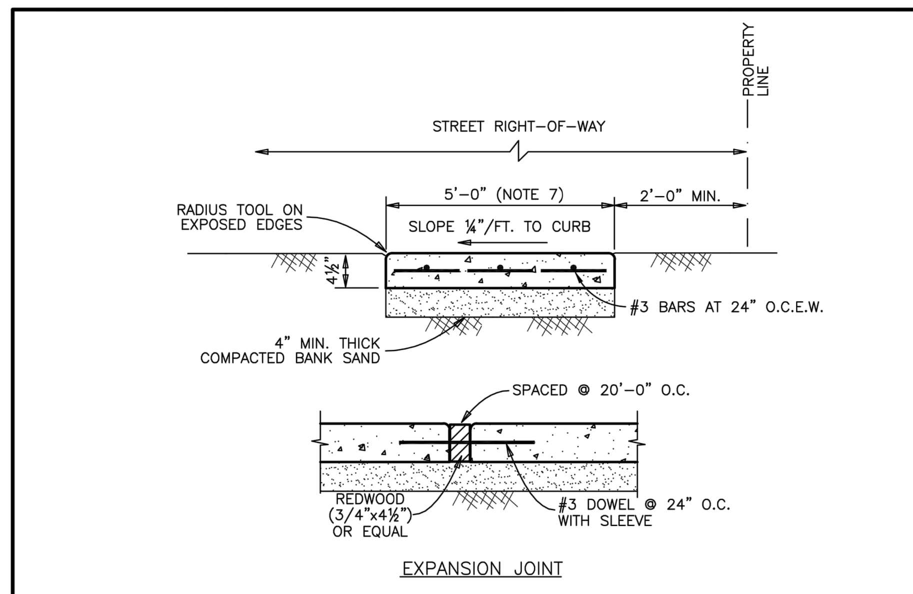

NOTES:
1. CONCRETE SHALL CONTAIN A MINIMUM OF FIVE AND ONE HALF (5½) SACKS OF CEMENT PER CUBIC YARD OF CONCRETE. 3500 P.S.I. @ 28 DAYS.
2. TIE TO EXISTING STEEL IN CONNECTION TO EXISTING WALK.
3. FINISH CONCRETE IN ACCORDANCE WITH CITY REQUIREMENTS – LIGHT BROOM FINISH.
4. SCORED CONTRACTION JOINTS AT 4'-0" O.C. EXPANSION JOINT EVERY 20'-0" O.C.
5. MAXIMUM SLOPE ALONG LENGTH OF SIDEWALK AT ANY LOCATION IS 5%. MAXIMUM SLOPE ACROSS SIDEWALK AT ANY LOCATION IS 2%.
6. SIDEWALK THICKNESS AND REINFORCEMENT SHALL MATCH DRIVEWAY REQUIREMENTS WITHIN THE LIMITS OF A DRIVEWAY.
7. WIDTH MAY BE REDUCED TO 4'-0" IF A SIDEWALK PEDESTRIAN PLAN IS INCLUDED IN THE PLANS SHOWING 5'-0"x5'-0" PASSING AREAS AT A MAXIMUM SPACING OF 200 FEET.

1. CONCRETE SIDEWALK

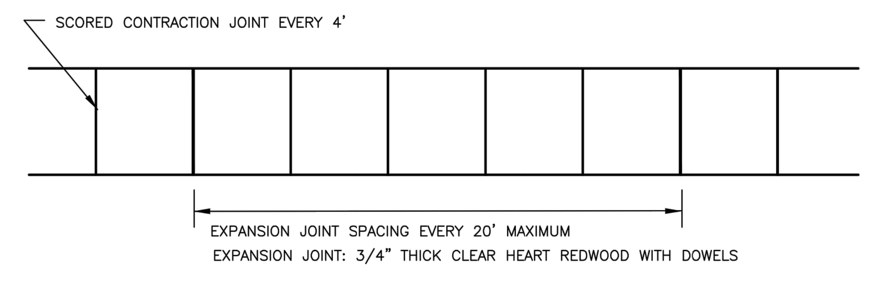

2. SIDEWALK JOINT DETAILS

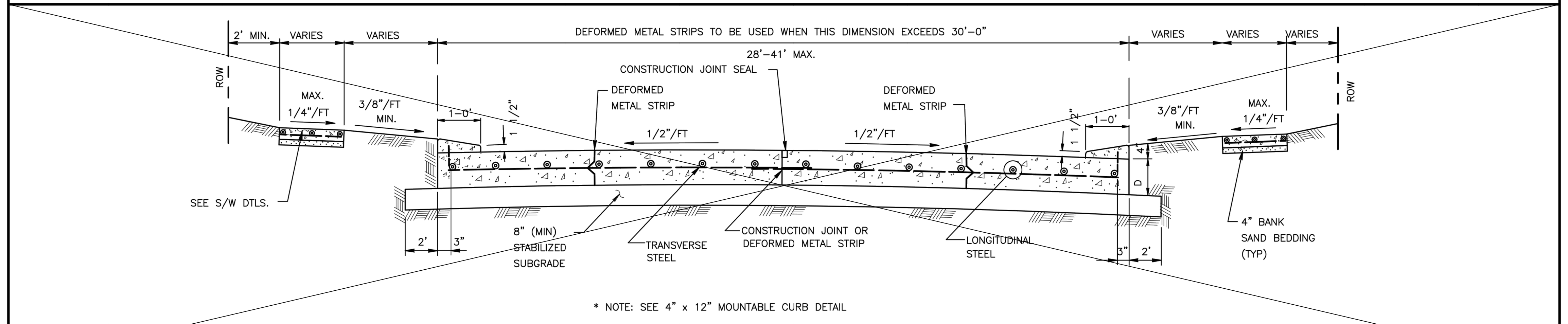

3. TYPICAL SINGLE ROADWAY SECTION FOR CONCRETE PAVEMENT WITH 4"X12" CURB

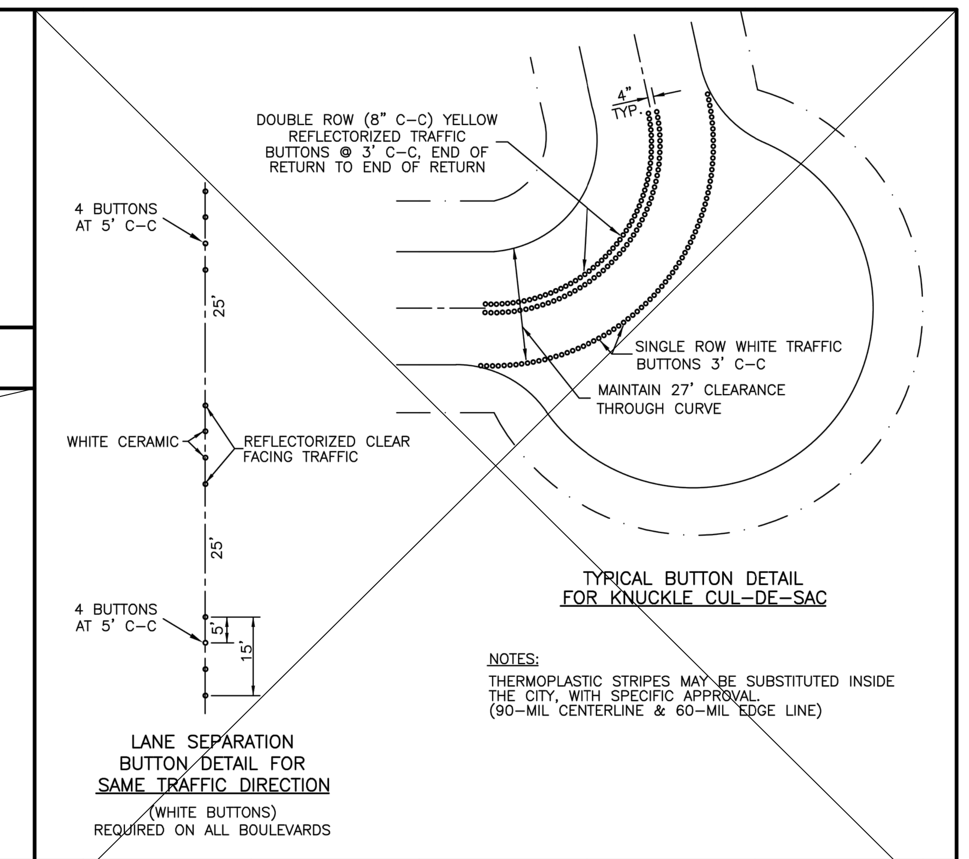

4. TRAFFIC MARKINGS

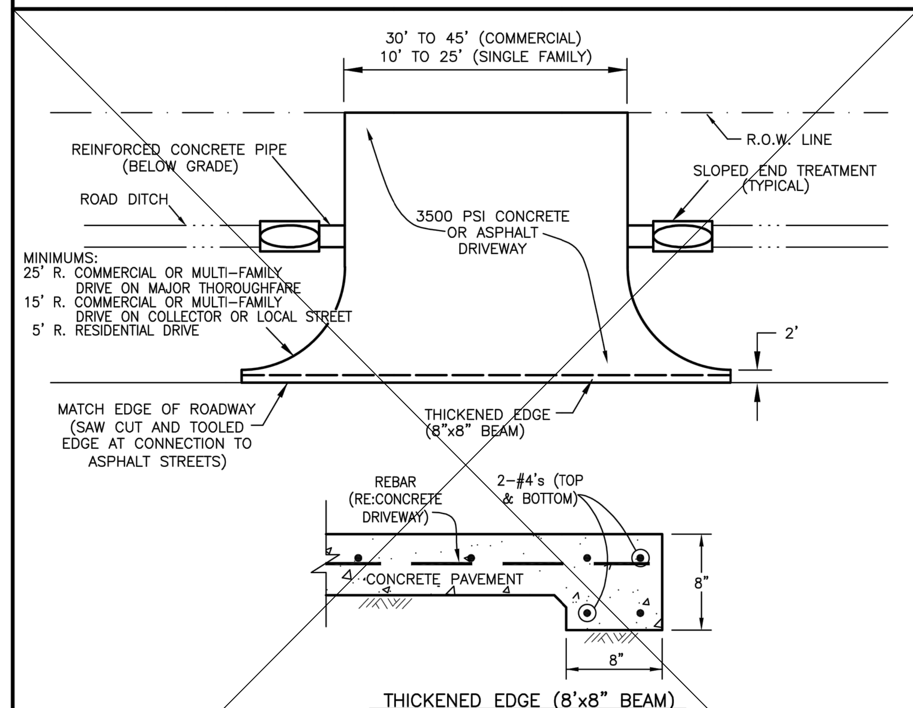

NOTES:
1. CULVERT DIAMETER SHALL BE A MINIMUM OF 15" (IN CITY ONLY) OR 24" (IN ETJ).
2. SLOPED END TREATMENTS SHALL BE INSTALLED ON ALL CULVERTS. SLOPED END TREATMENTS ON CULVERTS WITHIN COLLECTOR OR RESIDENTIAL STREET RIGHT-OF-WAYS SHALL HAVE A MINIMUM SLOPE OF 3 TO 1. SLOPED END TREATMENTS ON CULVERTS WITHIN MAJOR THOROUGHFARE RIGHT-OF-WAYS SHALL HAVE A MINIMUM SLOPE OF 6 TO 1.
3. USE C/S #1.

5. DRIVEWAY WITH OPEN DITCH

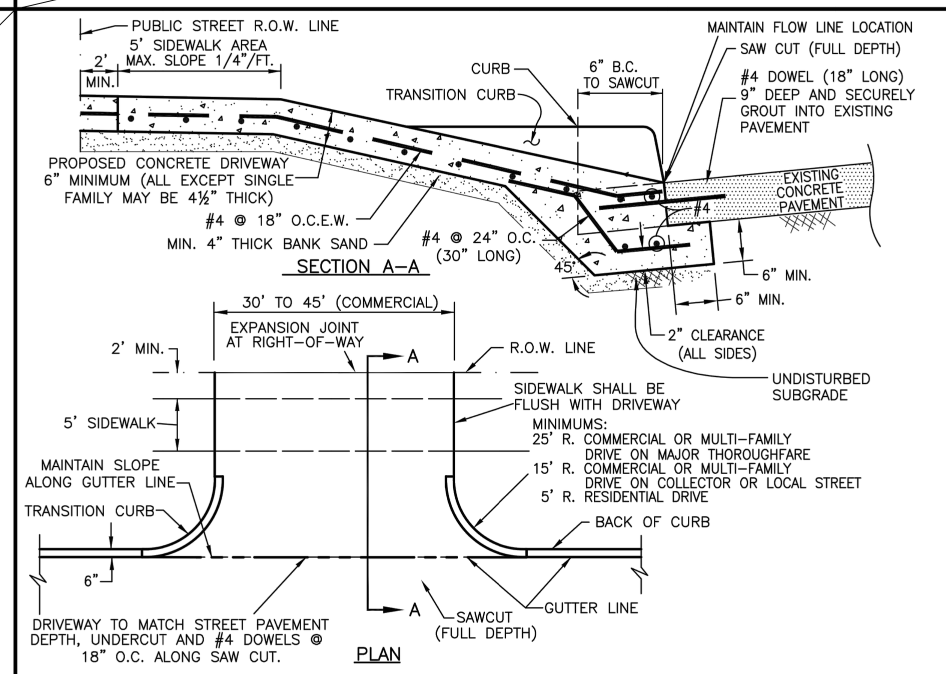

DRIVEWAY NOTES:
1. SAW CUT & BREAKOUT NO MORE THAN 48 HOURS PRIOR TO PROPOSED CONCRETE PLACEMENT.
2. UNACCEPTABLE SUBGRADE SHALL BE OVEREXCAVATED AND REPLACED WITH CONCRETE.
3. EDGE ALL SIDES WITH EDGING TOOL AND BROOM FINISH.
4. PROVIDE BARRICADES AND TRAFFIC WARNING DEVICES DURING CONSTRUCTION.
5. PORTLAND CEMENT CONCRETE CONTAIN A MINIMUM 5½ SACKS PER CUBIC YARD (3500 P.S.I. AT 28 DAYS).
6. REINFORCING SHALL BE ASTM A-615 GRADE WITH 10" MINIMUM OVERLAP AT JOINTS.
7. COMPACT SUBGRADE TO 95% OF STANDARD PROCTOR DENSITY (+/- 2% OF OPTIMUM MOISTURE).
8. EXTEND EXPANSION JOINT FROM STREET TO THE RIGHT-OF-WAY.

6. CONCRETE DRIVEWAY

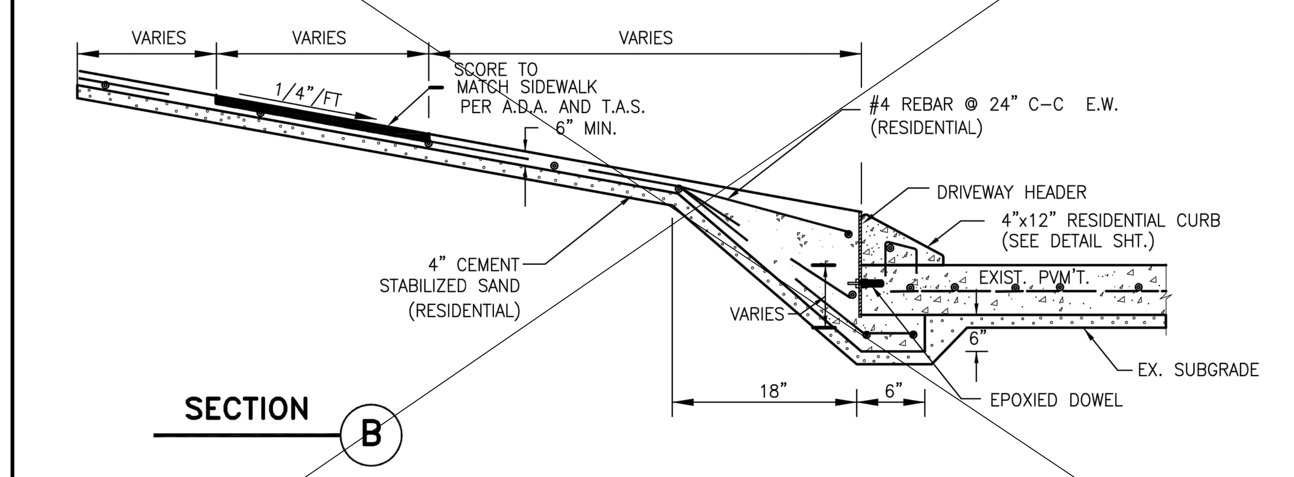

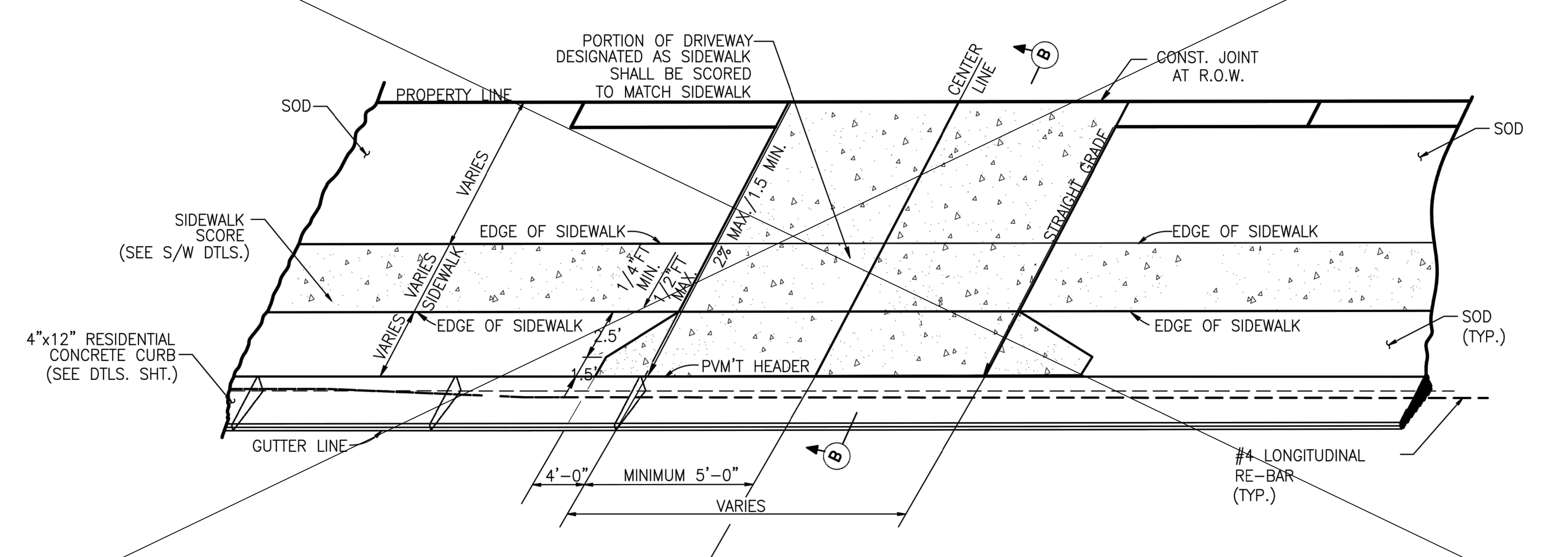

7. 4"X12" CONCRETE CURB DRIVEWAY PLAN

NO.	DATE	REVISIONS	APP.

CITY OF RICHMOND
STANDARD CONSTRUCTION DETAILS
PAVING-2

SCALE		DESIGNED BY:	LLT
HORIZONTAL	1" = NTS	DRAWN BY:	TWB
VERTICAL	1" = NTS	CHECKED BY:	CBA
		DATE:	3/22/19
		JOB NO:	
		DWG. NO:	R-10-19

Sheet:

FSGROUP ARCHITECTS
13105 Northwest Fwy Suite 1110
Houston Texas 77040
713 344 1752 Office
www.fsdesignbuild.com

PROJECT NAME
INFORMATION TECHNOLGY BUILDING
EUGENE HEIMANN CIRCLE
FORT BEND COUNTY . TEXAS

CONSULTANTS

ISANI CONSULTANTS L.P
ISANI civil \ design \ engineers
10448 WEST OFFICE DRIVE
HOUSTON, TEXAS 77042
T: (713) 747 2399
F: (713) 747 4797
TBPE FIRM REGISTRATION #4575

ISANI PROJECT NO: 23LD73

PROFESSIONAL SEAL
RAM GULIANI
101094
05/15/2024

ISSUED FOR
ISSUED FOR PROPOSAL AND PERMIT

REVISIONS

No.	DESCRIPTION	DATE

KEY PLAN

SHEET TITLE
CIVIL DETAILS - 7

SCALE: As indicated
DATE: 05/15/2024
PROJECT NUMBER: 2319
SHEET NUMBER
C6.07

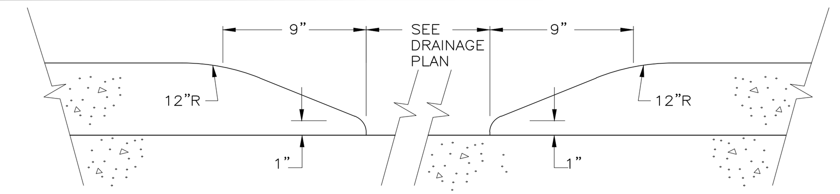

2 END OF CURB AND CURB OPENING
SCALE: NTS

EXPANSION JOINT TO BE PLACED AT THE END OF EACH CURB RADIUS AND SPACED PER PAVEMENT DETAIL.

STAKES FOR TRANSVERSE JOINTS SHALL NOT BE PLACED CLOSER THAN 6" TO A LONGITUDINAL JOINT THE TOP OF EACH STAKE SHALL NOT BE LESS THAN 1" BELOW THE FINISH SURFACE.

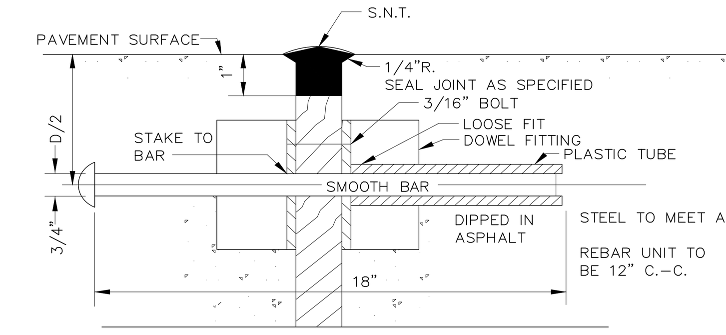

DOWEL TYPE EXPANSION JOINT

N.T.S.

CANTILEVER TYPE, CAST MALLEABLE IRON LOAD TRANSMISSION UNIT STAR-LUG MODEL D-27 OR EQUAL ON 12" C-C. ACCEPTABLE AS ALTERNATIVES. ALSO, MARINE LUMBER COMPANY EXPANSION JOINT WITH POWER DRIVEN PIN IS ACCEPTABLE.

3 EXPANSION JOINT DETAIL
SCALE: NTS

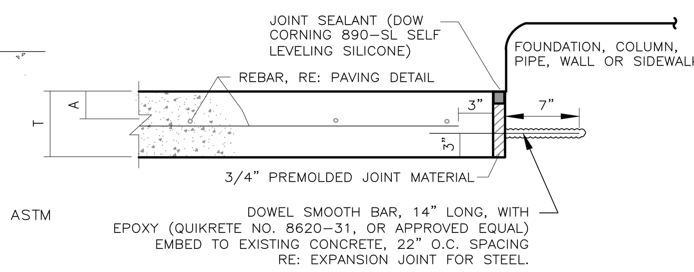

4 ISOLATION JOINT DETAIL
SCALE: NTS

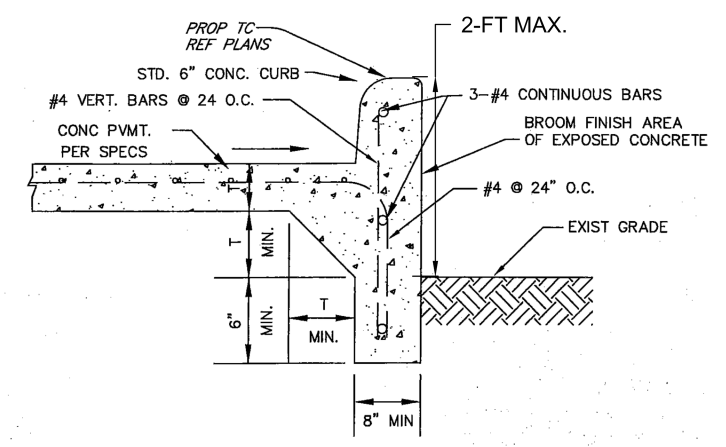

1 RETAINING CURB
NTS

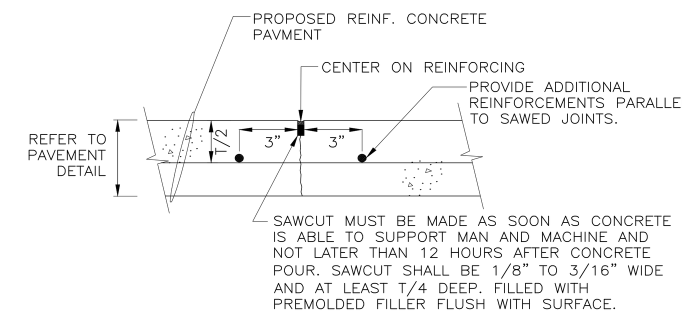

NOTES:
1. CONSTRUCTION JOINT PAVEMENT DETAIL MAY BE SUBSTITUTED FOR CONTROL JOINT AT CONTRACTOR'S OPTION.

5 CONTROL JOINT
SCALE: NTS

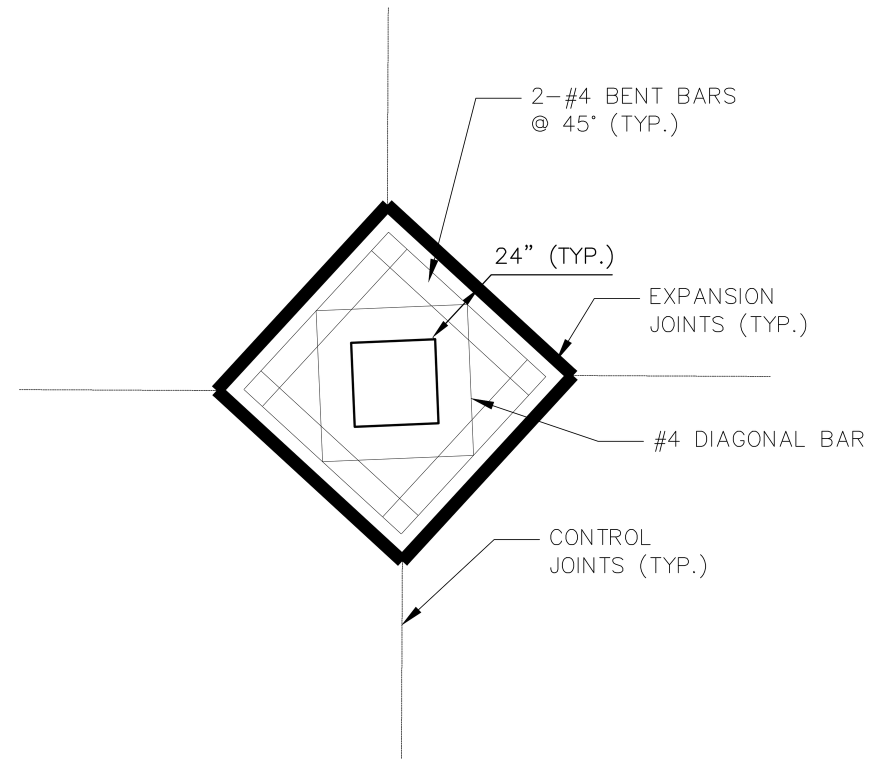

6 JOINTS LAYOUT PLAN IN UTILITY FIXTURES (TYP.)
SCALE: NTS

PROVIDE BOARD JOINTS (1/2" NON EXTRUDING PREFORMED) IN CURB AT LOCATIONS OF JOINTS IN UNDERLYING PAVEMENT SLAB.

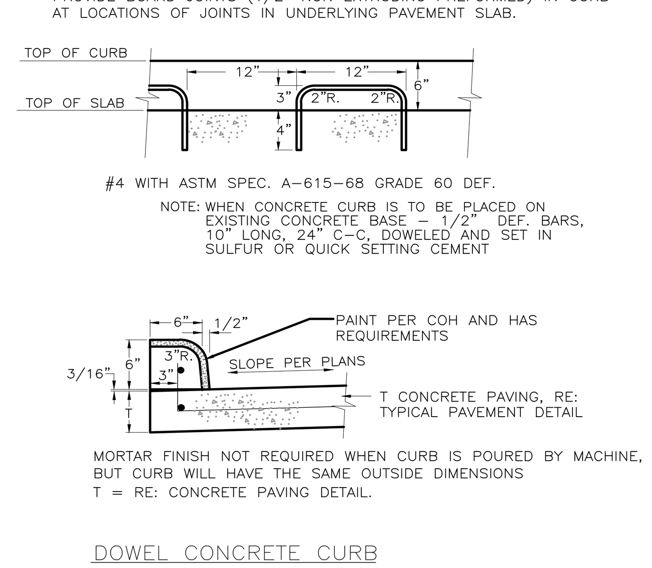

7 DOWEL-ON CONCRETE CURB
SCALE: NTS

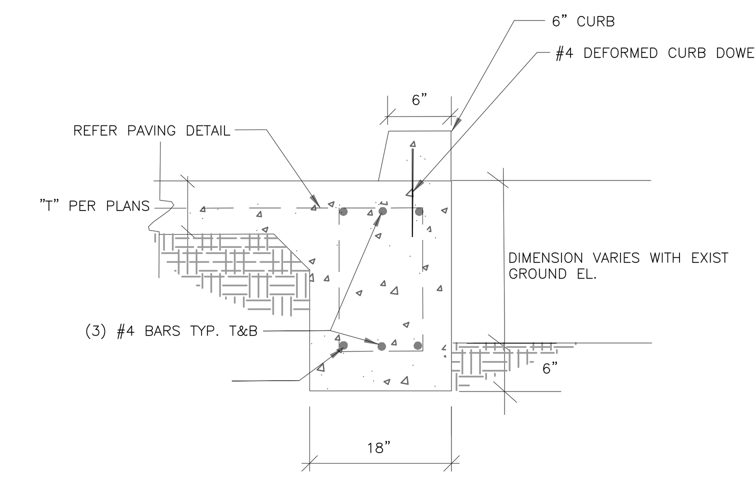

4 TURNDOWN CURB
SCALE: NTS

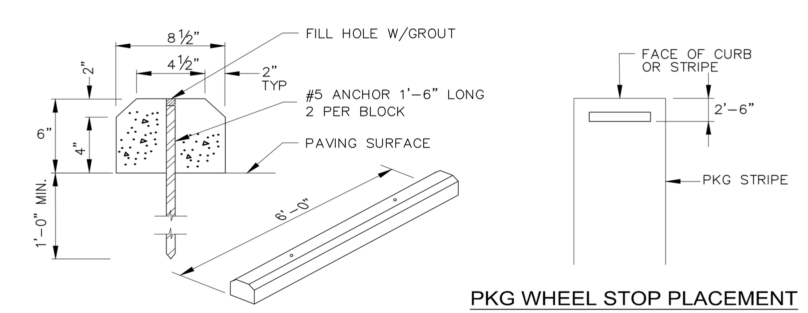

8 PARKING WHEEL STOP DETAIL
SCALE: NTS

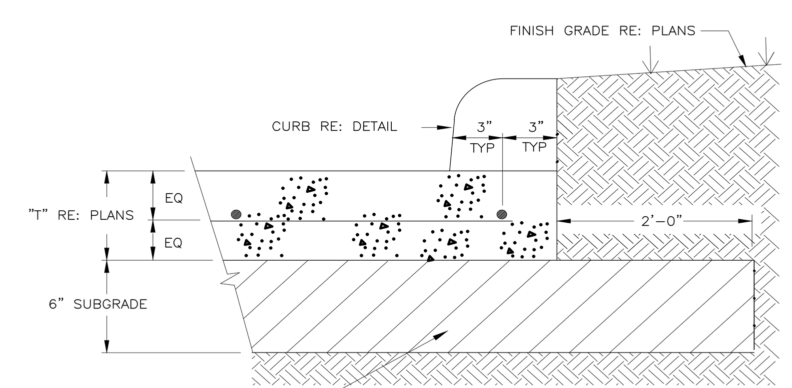

SUBGRADE STABILIZATION NOTE:
LIME-STABILIZED / CEMENT STABILIZED SUBGRADE TO BE PROVIDED PER GEOTECHNICAL REPORT NO. H232608 DRAFT DATED DECEMBER 14, 2023 IN ALPHA REPORT

REFER TO SITE PLAN FOR PAVING THICKNESS.

9 CONCRETE PAVEMENT DETAIL
SCALE: NTS

PAVING/JOINTING NOTES:

1. REINFORCING STEEL: STEEL BARS SHALL BE GRADE 60
   - 5" THICK CONCRETE: #3 BARS SPACED AT 18 INCHES ON CENTERS IN BOTH DIRECTIONS
   - 6" THICK CONCRETE: #3 BARS SPACED AT 18 INCHES ON CENTERS IN BOTH DIRECTIONS.
   - 7" THICK CONCRETE: #4 BARS SPACED AT 18 INCHES ON CENTERS IN BOTH DIRECTIONS.
2. CONTROL JOINT SPACING: MAXIMUM OF 15 FEET,
3. EXPANSION JOINT SPACING: MAXIMUM OF 60 FEET.
4. DOWELS AT EXPANSION JOINTS: 3/4 INCH BARS, 18 INCHES IN LENGTH, WITH ONE END TREATED TO SLIP, SPACED AT 12 INCHES ON CENTER AT EACH JOINT.
5. REINFORCED CONCRETE PAVEMENT – THE PORTLAND CEMENT CONCRETE MIX SHOULD HAVE A MINIMUM 28-DAY COMPRESSIVE STRENGTH OF 3,500 PSI, AND FIVE PERCENT ENTRAINED AIR.
6. CURBS ARE 6 INCHES IN HEIGHT UNLESS NOTED OTHERWISE.

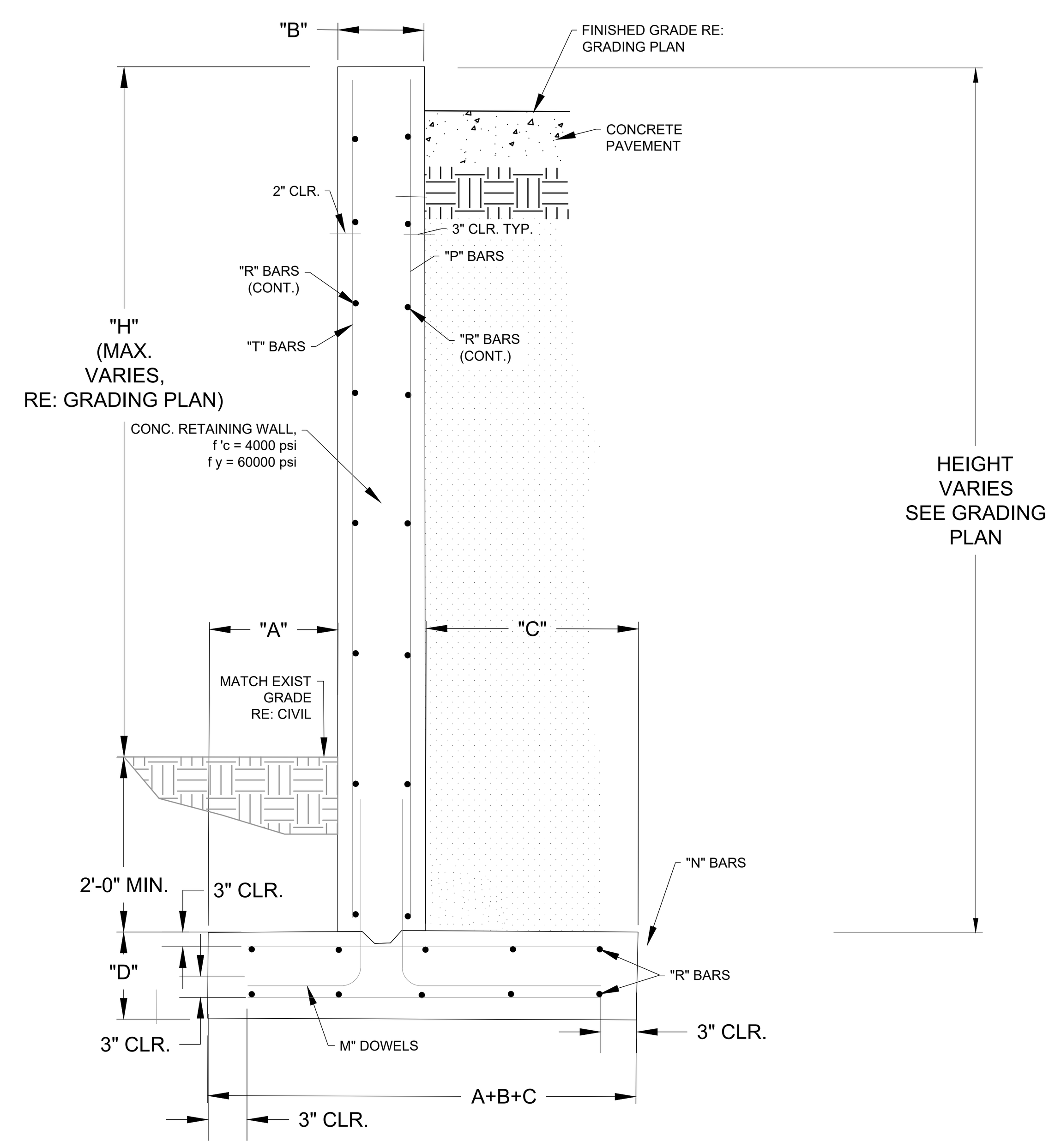

RETAINING WALL SCHEDULE

"H"	"A"	"B"	"C"	"D"	REINFORCING					
					"M" DOWELS	"N" BARS	"P" BARS	"R" BARS	"S" LAP	"T" BARS
MAX 1'-6"	0'-6"	6"	0'-10"	8"	#4 @ 18" O.C.	#4 @ 12" O.C.		#4 @ 12" O.C.		

10 CONC. RETAINING WALL
NTS

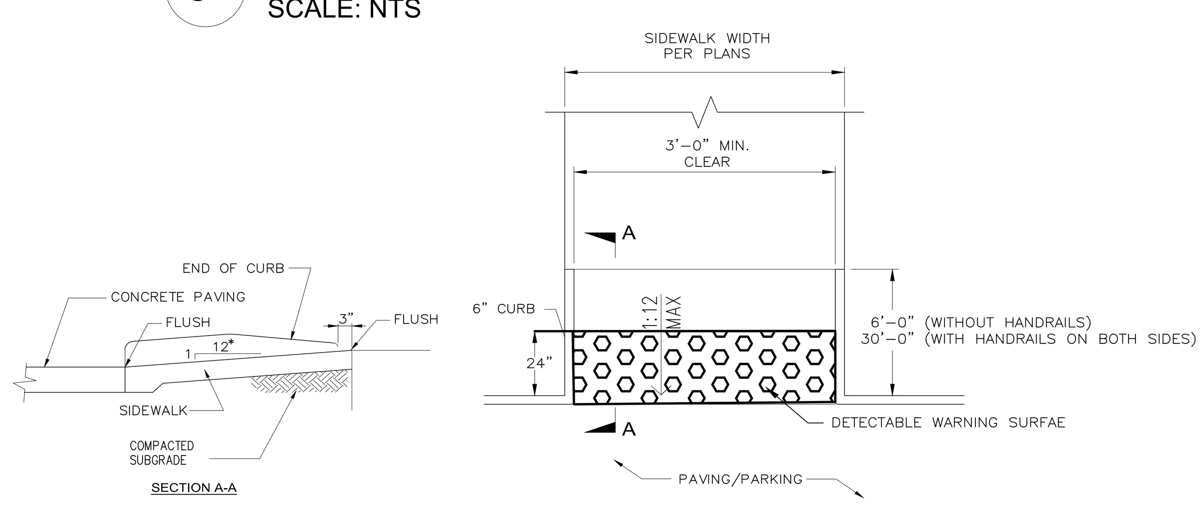

NOTES:-

1. RAMP SHOULD BE LOCATED AS SHOWN ON CIVIL SITE SHEETS.
2. DETECTABLE WARNING SURFACE,CONSISTING OF RAISED,TRUNCATED DOMES, SHALL BE INSTALLED ON THE RAMP.ROWS OF TACTILE DOME TREATMENT SHOULD BE ORIENTATED PARALLEL WITH THE CENTER LINE OF RAMP. THE SAME DETECTABLE WARNING SURFACE PATTERN AND COLOR SHALL BE USED THROUGHOUT THE PROJECT.DETECTABLE WARNING SURFACES SHALL CONTRAST VISUALLY WITH ADJACENT WALKING SURFACES, EITHER LIGHT-ON-DARK OR DARK-ON-LIGHT.
3. DETECTABLE WARNING SURFACES MUST BE FULLY ADA COMPLIANT.
4. DETECTABLE WARNING SURFACE MUST MAINTAIN A SLIP RESISTANCE WITH A FA-VALUE EQUAL TO OR GREATER THAN 8.0 AND A WATER ABSORPTION RATE OF LESS THAN 1%. THE DETECTABLE WARNING SURFACE SHALL NOT ALLOW WATER TO ACCUMULATE.
5. DETECTABLE WARNING INSTALLED INTO FRESH CONCRETE SHALL BE WITHOUT VOIDS AND UTILIZING AN ANCHORING SYSTEM APPROVED BY THE ENGINEER.
6. DETECTABLE WARNING INSTALLED INTO FRESH CONCRETE SHALL BE WITHOUT VOIDS AND UTILIZING AN ANCHORING SYSTEM APPROVED BY THE ENGINEER.
7. DETECTABLE WARNING SURFACE SHALL BE A MINIMUM OF 24" IN DEPTH IN THE DIRECTION OF PEDESTRIAN TRAVEL AND EXTEND FULL WIDTH OF THE RAMP. DETECTABLE WARNING SURFACES SHALL BE LOCATED SO THAT THE EDGE NEAREST THE CURB LINE IS 6"MIN TO 10"MAX FROM THE DETECTABLE WARNING SURFACE.
8. TRUNCATED DOMES IN A DETECTABLE WARNING SURFACE SHALL HAVE A BASE DIAMETER OF 0.9 INCH MIN AND 1.4 INCHES MAX, A TOP DIAMETER OF 50 PERCENT OF THE BASE DIAMETER MIN TO 65 PERCENT OF THE BASE DIAMETER MAX, AND A HEIGHT OF 0.2 INCH. TRUNCATED DOMES SHALL HAVE A CENTER-TO-CENTER SPACING OF 1.6 INCHES MINIMUM AND 2.4 INCHES MAXIMUM, AND A BASE-TO-BASE SPACING OF 0.65 INCH MIN, MEASURED BETWEEN THE MOST ADJACENT DOMES ON A SQUARE GRID.

11 ON SITE ADA RAMP DETAIL
SCALE: NTS

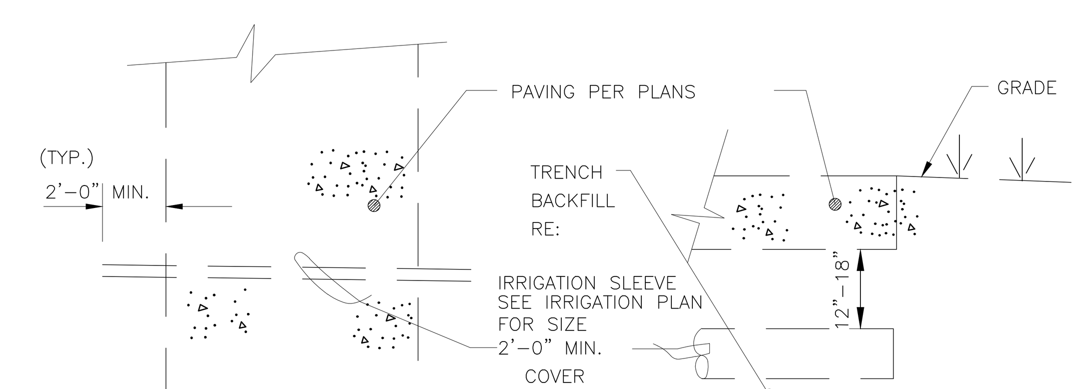

12 IRRIGATION SLEEVE DETAIL
SCALE: NTS

FSGROUP® ARCHITECTS
13105 Northwest Fwy Suite 1110
Houston Texas 77040
713 344 1752 Office
www.fsdesignbuild.com

PROJECT NAME

INFORMATION TECHNOLOGY BUILDING
EUGENE HEIMANN CIRCLE
FORT BEND COUNTY . TEXAS

CONSULTANTS

ISANI CONSULTANTS L.P
ISANI
civil \ design \ engineers
10448 WEST OFFICE DRIVE
HOUSTON, TEXAS 77042
T: (713) 747 2399
F: (713) 747 4797
TBPE FIRM REGISTRATION #4575

ISANI PROJECT NO: 23LD73

PROFESSIONAL SEAL

STATE OF TEXAS
RAM GULIANI
101094
LICENSED
PROFESSIONAL ENGINEER
05/15/2024

ISSUED FOR
ISSUED FOR PROPOSAL AND PERMIT

REVISIONS

No.	DESCRIPTION	DATE

KEY PLAN

SHEET TITLE
CIVIL DETAILS-8

SCALE
As indicated

DATE
05/15/2024

PROJECT NUMBER
2319

SHEET NUMBER
C6.08

NYLOPLAST 12" DRAIN BASIN: 2812AG _ _ X

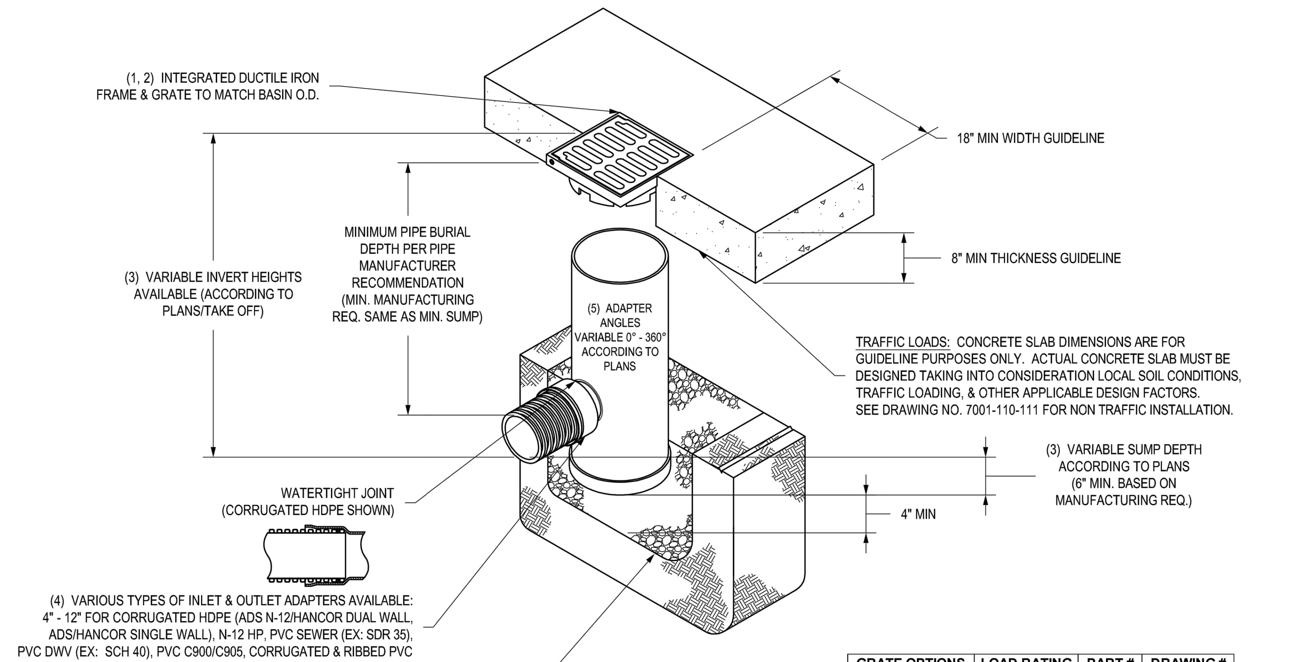

(4) VARIOUS TYPES OF INLET & OUTLET ADAPTERS AVAILABLE: 4" - 12" FOR CORRUGATED HDPE (ADS N-12/HANCOR DUAL WALL, ADS/HANCOR SINGLE WALL), N-12 HP, PVC SEWER (EX: SDR 35), PVC DWV (EX: SCH 40), PVC C900/C905, CORRUGATED & RIBBED PVC

THE BACKFILL MATERIAL SHALL BE CRUSHED STONE OR OTHER GRANULAR MATERIAL MEETING THE REQUIREMENTS OF CLASS I, CLASS II, OR CLASS III MATERIAL AS DEFINED IN ASTM D2321. BEDDING & BACKFILL FOR SURFACE DRAINAGE INLETS SHALL BE PLACED & COMPACTED UNIFORMLY IN ACCORDANCE WITH ASTM D2321.

GRATE OPTIONS	LOAD RATING	PART #	DRAWING #
PEDESTRIAN	MEETS H-10	1299CGP	7001-110-202
STANDARD	MEETS H-20	1299CGS	7001-110-203
SOLID COVER	MEETS H-20	1299CGC	7001-110-204
PEDESTRIAN BRONZE	N/A	1299CGPB	7001-110-205
DOME	N/A	1299CGD	7001-110-206
DROP IN GRATE	LIGHT DUTY	1201DI	7001-110-021

1 - GRATES/SOLID COVER SHALL BE DUCTILE IRON PER ASTM A536 GRADE 70-50-05, WITH THE EXCEPTION OF THE BRONZE GRATE.
2 - FRAMES SHALL BE DUCTILE IRON PER ASTM A536 GRADE 70-50-05
3 - DRAIN BASIN TO BE CUSTOM MANUFACTURED ACCORDING TO PLAN DETAILS. RISERS ARE NEEDED FOR BASINS OVER 84" DUE TO SHIPPING RESTRICTIONS. SEE DRAWING NO. 7001-110-065
4 - DRAINAGE CONNECTION STUB JOINT TIGHTNESS SHALL CONFORM TO ASTM D3212 FOR CORRUGATED HDPE (ADS N-12/HANCOR DUAL WALL), N-12 HP, & PVC SEWER.
5 - ADAPTERS CAN BE MOUNTED ON ANY ANGLE 0° TO 360°. TO DETERMINE MINIMUM ANGLE BETWEEN ADAPTERS SEE DRAWING NO. 7001-110-012.

DRAWN BY EBC | DATE 03-29-06 | REVISED BY NMH | DATE 03-11-16 | MATERIAL | PROJECT NO./NAME

ADS Nyloplast
3130 VERONA AVE
BUFORD, GA 30518
PHN (770) 932-2443
FAX (770) 932-2490
www.nyloplast-us.com

TITLE: 12 IN DRAIN BASIN QUICK SPEC INSTALLATION DETAIL
DWG SIZE A | SCALE 1:20 | SHEET 1 OF 1 | DWG NO. 7001-110-189 | REV E

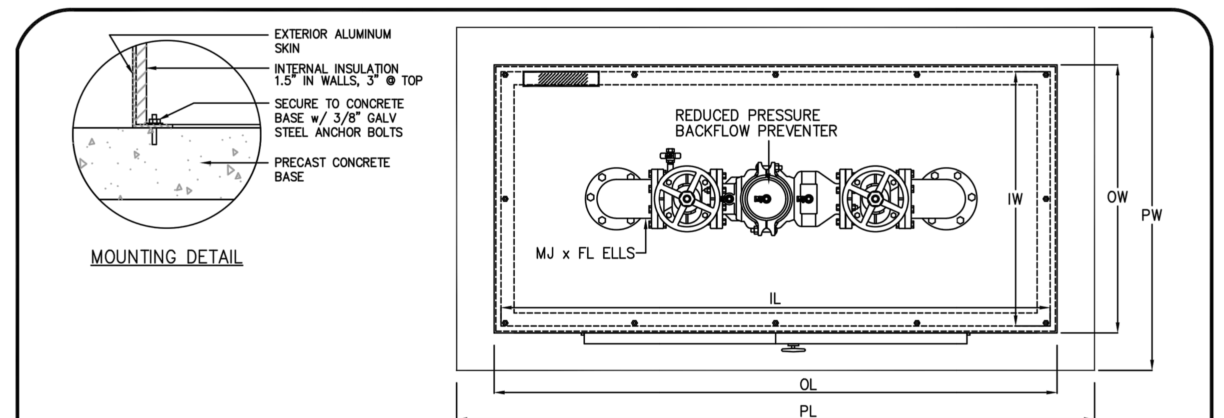

MODEL NO.	BFP SIZE	INSIDE DIMENSIONS IL	IW	IH	OUTSIDE DIMENSIONS OL	OW	OH	DOOR SIZE DH	DW	PAD DIMENSIONS PL	PW	PT	"PC" PIPE CENTERS
RPBPAE-2.5	2½"	72"	22"	38"	75"	25"	41"	28¾"	38"	100"	40"	6"	42"
RPBPAE-03	3"	86"	26"	44"	89"	29"	47"	28¾"	44"	100"	40"	6"	43"
RPBPAE-04	4"	86"	26"	44"	89"	29"	47"	28¾"	44"	100"	40"	6"	50⅜"
RPBPAE-06	6"	97"	33"	61"	100"	36"	64"	38¾"	64"	114"	50"	6"	60⅞"
RPBPAE-08	8"	97"	33"	61"	100"	36"	64"	38¾"	64"	114"	50"	6"	78⅞"
RPBPAE-10	10"	120"	38"	64"	123"	41"	67"	38¾"	64"	134"	52"	6"	85⅞"

NOTE: SIZE MAY VARY DEPENDING ON MODEL OF BACKFLOW PREVENTER

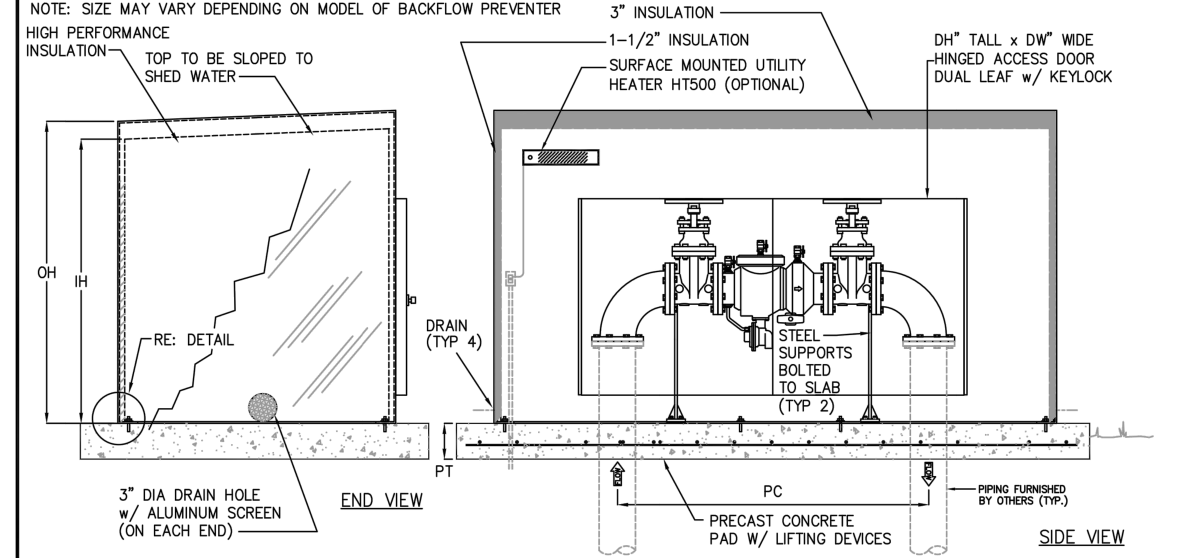

Specifications

GENERAL
The Model ERP aluminum enclosure is pre engineered to provide protection to backflow preventers, meters, pumps, and other devices installed above ground. These water conveying devices are subject to freezing and vandalism. The enclosure is designed to be installed over the equipment after installation. The enclosure is equipped with access doors to provide adequate access to the equipment.

CONSTRUCTION
The enclosure shall be manufactured from all new materials. The exterior shall be fabricated with 0.090 aluminum, continuously welded. The access door(s) shall be of like material and hinged with a continuous hinge. The door shall be equipped with a 3-point locking mechanism. The interior of the enclosure shall be structurally lined with high performance, non-wicking insulation.

HEATER
Interior heaters (if required) shall be thermostatically controlled and be mounted to the interior wall of the enclosure. A GFI receptacle shall be provided by others to provide power to the electric heater.

PROJECT:
CUSTOMER:
ENGINEER:
ORDER #:
PROJ #:
DATE:

888.611.PARK
www.parkusa.com
PARK USA DESIGN FOR WATER

WEATHERPROOF ENCLOSURE FOR RPZ BACKFLOW PREVENTER

PM . | DRN . | ENG . | DWG. NO. RPBPAE-1 | REV. A
DATE 2018
RPBPAE-1

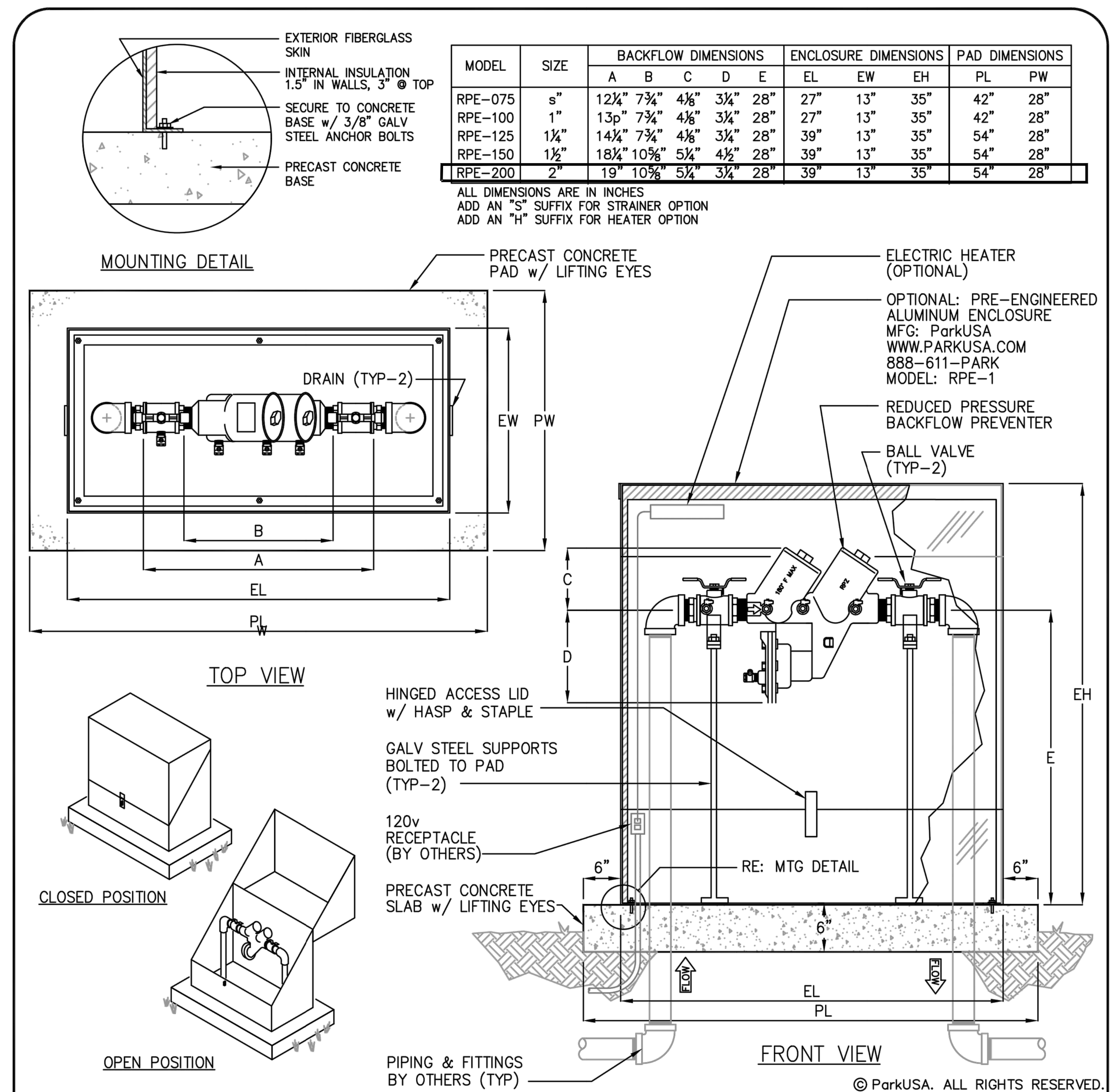

MODEL	SIZE	BACKFLOW DIMENSIONS A	B	C	D	E	ENCLOSURE DIMENSIONS EL	EW	EH	PAD DIMENSIONS PL	PW
RPE-075	¾"	12¾"	7¾"	4⅜"	3¼"	28"	27"	13"	35"	42"	28"
RPE-100	1"	13"	7¾"	4⅜"	3¼"	28"	27"	13"	35"	42"	28"
RPE-125	1¼"	14¾"	7¾"	4⅜"	3¼"	28"	39"	13"	35"	54"	28"
RPE-150	1½"	18¾"	10⅝"	5⅞"	4⅜"	28"	39"	13"	35"	54"	28"
RPE-200	2"	19"	10⅝"	5⅞"	3¾"	28"	39"	13"	35"	54"	28"

ALL DIMENSIONS ARE IN INCHES
ADD AN "S" SUFFIX FOR STRAINER OPTION
ADD AN "H" SUFFIX FOR HEATER OPTION

Specifications

CONCRETE: Class I/II concrete with design strength of 4500 PSI at 28 days.

REINFORCEMENT: Grade 60 reinforced. Steel rebar conforming to ASTM A615 on required centers or equal.

Typical Applications

RP devices are used to protect against high hazard (toxic) fluids in water services to industrial plants, hospital facilities, morgues, mortuaries, and chemical plants. They are also used in irrigation systems, boiler feed, water lines and other installations requiring maximum protection.

Engineering Data

The backflow assembly shall be factory assembled on pad & hydrostatically tested prior to delivery. Field excavation & preparation shall be complete prior to delivery. Pipe, valves and fittings of the assembly shall be approved by one or more of the following associations:

FM AWWA UL UPC AMERICAN SOCIETY OF SANITARY ENGINEERING ASSE NPCA CERTIFIED PLANT

PROJECT:
CUSTOMER:
ENGINEER:
ORDER #:
PROJ #:
DATE:

888.611.PARK
www.parkusa.com
PARK USA DESIGN FOR WATER

REDUCED PRESSURE BACKFLOW PREVENTER w/ INSULATED ENCLOSURE MODEL RPE - 3/4" THRU 2"

PM . | DRN . | ENG . | DWG. NO. RPE-1 | REV. A
DATE 2018

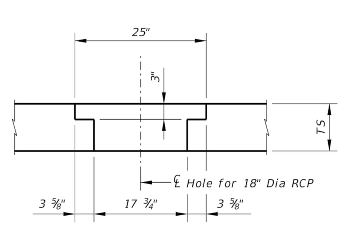

DETAIL "B"

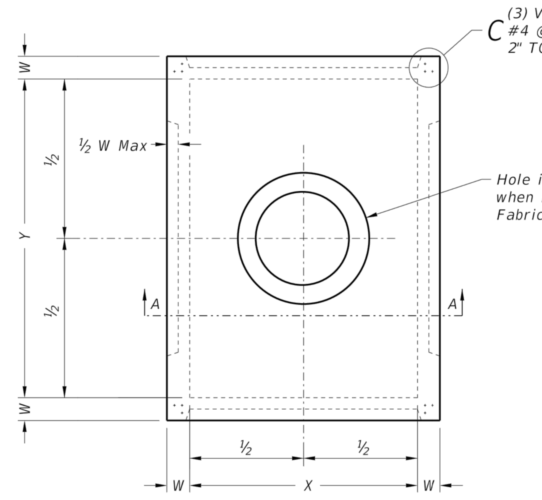

PLAN VIEW

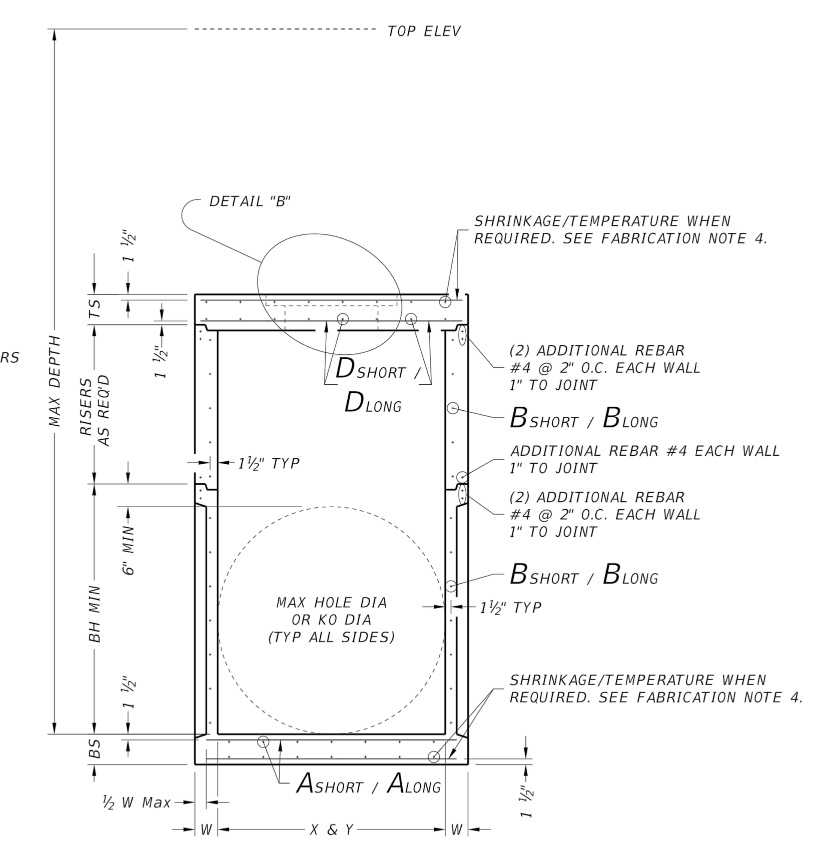

SECTION A-A

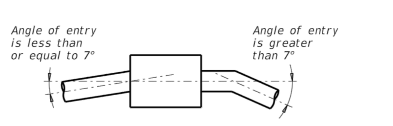

PIPE CONNECTION DETAIL

Connect pipes within 7° of normal to PJB wall. If necessary, use pipe elbow or curved approach alignment to stay within this limit.

FABRICATION NOTES:
1. Provide Class "H" concrete in accordance with Item 421 and having a minimum compressive strength of 5,000 psi.
2. Provide Grade 60 reinforcing steel or equivalent area of WWR.
3. Provide typical clear cover of 1 ½" to reinforcing steel at interior or exterior walls.
4. Walls or slabs with a thickness of 8" or greater require shrinkage and temperature reinforcing steel. Provide steel area = 0.11 in²/ft each way.
5. No substitution is allowed for vertical and horizontal #4 bars in corners.
6. Manufacture base and risers to nearest 3" increment.
7. Design tongue and groove joints for full closure on both shoulders. Minimum spigot depth is ¾".
8. Provide lifting devices in conformance with Manufacturer's recommendations.
9. See sheet PDD for sizes, dimensions, and reinforcing steel not shown.
10. Provide hole in below grade slab only when PJB is installed with inlet type PDD.

INSTALLATION NOTES:
1. Inverts (benching) to be provided by Contractor. Concrete or mortar used for invert is subsidiary to junction box.
2. Seal tongue and groove joints with preformed or bulk mastic in conformance with Manufacturer's recommendations. Tongue and groove joints may be grouted no more than 1" between each section, or ½ the joint depth, whichever is greater.
3. Do not grout rubber gasket joints without Manufacturer's recommendation.
4. For right pipe, cut hole in thin wall panel (KO) 6" Max, 2" Min larger than pipe OD.
5. For flexible pipe, consult boot/seal Manufacturer's specification for placement tolerance and hole size. Center pipe in hole and install boot/seal per Manufacturer's specification.

GENERAL NOTES:
1. Precast Junction Box consists of base slab, base unit, risers (as required) and below grade slab. See sheet PDD for sizes.
2. Designed according to ASTM C913.
3. Payment for junction box is per Item 465 "Junction Boxes, Manholes, and Inlets" by type and size.

Cover dimensions are clear dimensions, unless noted otherwise.

HL93 LOADING

Texas Department of Transportation | Bridge Division Standard

PRECAST JUNCTION BOX

PJB

	Size	MAX DEPTH = 15 ft. to top of BASE SLAB: Base Slab: Short Span Reinf Steel Area	Long Span Reinf Steel Area	Thickness	Base Unit or Riser Walls: Short Span Reinf Steel Area	Long Span Reinf Steel Area	Thickness	Below Grade Slab (w/PJB) Reducing Slab (w/PB): Reduced Riser Size	Short Span Reinf Steel Area	Long Span Reinf Steel Area	Thickness	MAX DEPTH = 25 ft. to top of BASE SLAB: Base Slab: Short Span Reinf Steel Area	Long Span Reinf Steel Area	Thickness	Base Unit or Riser Walls: Short Span Reinf Steel Area	Long Span Reinf Steel Area	Thickness	Below Grade Slab (w/PJB) Reducing Slab (w/PB): Reduced Riser Size	Short Span Reinf Steel Area	Long Span Reinf Steel Area	Thickness	Min Height (See Gen Note 3)	Max HOLE DIA (See Fab Note 2)	Max KO DIA (See Fab Note 2)
	X x Y	Ashort	Along	BS	Bshort	Blong	W	RWSxRWL or ID	Dshort	Dlong	TS	Ashort	Along	BS	Bshort	Blong	W	RWSxRWL or ID	Dshort	Dlong	TS	BH MIN	HOLE DIA	KO DIA
	ft.	in²/ft	in²/ft	in.	in²/ft	in²/ft	in.	ft. **	in²/ft	in²/ft	in.	in²/ft	in²/ft	in.	in²/ft	in²/ft	in.	ft. **	in²/ft	in²/ft	in.	ft.	in.	in.
Precast Junction Box (PJB)	3x3	0.23	0.23	6	0.19	0.19	6	N/A	0.37	0.37	9	0.29	0.29	6	0.24	0.24	6	N/A	0.37	0.37	9	3.5	36	36
	4x4	0.29	0.29	6	0.24	0.24	6	N/A	0.41	0.41	9	0.47	0.47	6	0.38	0.38	6	N/A	0.41	0.41	9	4.5	48	48
	3x5	0.29	0.18	6	0.19	0.35	6	N/A	0.48	0.48	9	0.39	0.18	6	0.23	0.59	6	N/A	0.48	0.48	9	3.5	36/60	36/60
	4x5	0.36	0.18	6	0.22	0.34	6	N/A	0.42	0.42	9	0.53	0.26	6	0.39	0.59	6	N/A	0.42	0.42	9	4.5	48/60	48/60
	5x5	0.36	0.36	6	0.34	0.34	6	N/A	0.43	0.43	9	0.62	0.62	6	0.59	0.59	6	N/A	0.43	0.43	9	5.5	60	60
	5x6	0.27	0.27	9	0.34	0.45	6	N/A	0.48	0.48	9	0.47	0.45	9	0.38	0.54	8	N/A	0.48	0.48	9	5.5	60/72	60/72
	6x6	0.27	0.27	9	0.45	0.45	6	N/A	0.56	0.56	9	0.52	0.52	9	0.54	0.54	8	N/A	0.56	0.56	9	6.5	72	72
	8x8	0.46	0.46	9	0.51	0.51	8	N/A	0.45	0.45	12	0.87	0.87	9	0.59	0.59	10	N/A	0.45	0.45	12	8.5	96	72
Precast Base (PB)	3x3	0.23	0.23	6	0.19	0.19	6	N/A	N/A	N/A	N/A	0.29	0.29	6	0.24	0.24	6	N/A	N/A	N/A	N/A	3.5	36	36
	4x4	0.29	0.29	6	0.24	0.24	6	N/A	N/A	N/A	N/A	0.47	0.47	6	0.38	0.38	6	N/A	N/A	N/A	N/A	4.5	48	48
	3x5	0.29	0.18	6	0.19	0.35	6	3x3	0.30	0.34	9	0.39	0.18	6	0.23	0.59	6	3x3	0.40	0.40	9	3.5	36/60	36/60
	4x5	0.36	0.18	6	0.22	0.34	6	3x3	0.30	0.30	9	0.53	0.26	6	0.39	0.59	6	3x3	0.46	0.37	9	4.5	48/60	48/60
	4x5	0.36	0.18	6	0.22	0.34	6	4x4	0.30	0.30	9	0.53	0.26	6	0.39	0.59	6	4x4	0.39	0.39	9	4.5	48/60	48/60
	4x5	0.36	0.18	6	0.22	0.34	6	48"	0.39	0.39	9	0.53	0.26	6	0.39	0.59	6	48"	0.47	0.47	9	4.5	48/60	48/60
	4x5	0.36	0.18	6	0.22	0.34	6	3x5	0.33	0.40	9	0.53	0.26	6	0.39	0.59	6	3x5	0.48	0.48	9	4.5	48/60	48/60
	5x5	0.36	0.36	6	0.34	0.34	6	3x3	0.34	0.34	9	0.62	0.62	6	0.59	0.59	6	3x3	0.53	0.53	9	5.5	60	60
	5x5	0.36	0.36	6	0.34	0.34	6	4x4	0.36	0.36	9	0.62	0.62	6	0.59	0.59	6	4x4	0.64	0.64	9	5.5	60	60
	5x5	0.38	0.38	6	0.34	0.34	6	48"	0.36	0.36	9	0.62	0.62	6	0.59	0.59	6	48"	0.64	0.64	9	5.5	60	60
	5x5	0.36	0.36	6	0.34	0.34	6	3x5	0.34	0.40	9	0.62	0.62	6	0.59	0.59	6	3x5	0.53	0.53	9	5.5	60	60
	5x6	0.31	0.31	9	0.34	0.45	6	3x3	0.34	0.34	9	0.47	0.45	9	0.38	0.54	8	3x3	0.61	0.50	9	5.5	60/72	60/72
	5x6	0.27	0.27	9	0.34	0.45	6	4x4	0.36	0.45	9	0.47	0.45	9	0.38	0.54	8	4x4	0.74	0.57	9	5.5	60/72	60/72
	5x6	0.29	0.29	9	0.34	0.45	6	48"	0.36	0.45	9	0.47	0.45	9	0.38	0.54	8	48"	0.74	0.57	9	5.5	60/72	60/72
	5x6	0.29	0.29	9	0.34	0.45	6	3x5	0.45	0.45	9	0.47	0.45	9	0.38	0.54	8	3x5	0.61	0.61	9	5.5	60/72	60/72
	6x6	0.29	0.29	9	0.45	0.45	6	3x3	0.41	0.41	9	0.52	0.52	9	0.54	0.54	8	3x3	0.74	0.74	9	6.5	72	72
	6x6	0.27	0.27	9	0.45	0.45	6	4x4	0.45	0.45	9	0.52	0.52	9	0.54	0.54	8	4x4	0.87	0.87	9	6.5	72	72
	6x6	0.29	0.29	9	0.45	0.45	6	48"	0.45	0.45	9	0.52	0.52	9	0.54	0.54	8	48"	0.87	0.87	9	6.5	72	72
	6x6	0.29	0.29	9	0.45	0.45	6	3x5	0.45	0.45	9	0.52	0.52	9	0.54	0.54	8	3x5	0.87	0.87	9	6.5	72	72
	8x8	0.52	0.52	9	0.51	0.51	8	3x3	0.61	0.61	12	0.91	0.91	9	0.70	0.70	10	3x3	0.85	0.85	12	8.5	96	72
	8x8	0.52	0.52	9	0.51	0.51	8	4x4	0.70	0.70	12	0.87	0.87	9	0.70	0.70	10	4x4	1.01	1.01	12	8.5	96	72
	8x8	0.52	0.52	9	0.51	0.51	8	48"	0.70	0.70	12	0.87	0.87	9	0.70	0.70	10	48"	1.01	1.01	12	8.5	96	72
	8x8	0.52	0.52	9	0.51	0.51	8	3x5	0.70	0.85	12	0.87	0.87	9	0.70	0.70	10	3x5	1.01	1.01	12	8.5	96	72

** Unless otherwise indicated.

FABRICATION NOTES:
1. Maximum spacing of reinforcement is 8".
2. At manufacturer's option, provide cast or cored holes or thin wall panels (KO) to the maximum diameter shown for each. When no penetration is required, it is acceptable to provide a wall with no sectional reduction.

GENERAL NOTES:
1. Precast Junction Box consists of base slab, base unit, risers (as required), and below grade slab. See sheet PJB for details.
2. Precast Base consists of base slab, base unit, risers (as required), reducing slab (as required), and reduced risers (as required). See sheet PB for details.
3. Min Height shown is for stock base units. Use stock base units whenever practical. Smaller height base units can be used in special installation circumstances, when noted elsewhere in the plans. Absolute minimum height of base units is 2'-6".

HL93 LOADING

Texas Department of Transportation | Bridge Division Standard

DESIGN DATA FOR PRECAST BASE AND JUNCTION BOX

PDD

FSGROUP ARCHITECTS
13105 Northwest Fwy Suite 1110
Houston Texas 77040
713 344 1752 Office
www.fsdesignbuild.com

PROJECT NAME

INFORMATION TECHNOLGY BUILDING
EUGENE HEIMANN CIRCLE
FORT BEND COUNTY, TEXAS

CONSULTANTS

ISANI CONSULTANTS L.P
ISANI civil \ design \ engineers
10448 WEST OFFICE DRIVE
HOUSTON, TEXAS 77042
T: (713) 747 2399
F: (713) 747 4797
TBPE FIRM REGISTRATION #4575

ISANI PROJECT NO: 23LD73

PROFESSIONAL SEAL

STATE OF TEXAS
RAM GULIANI
101094
LICENSED PROFESSIONAL ENGINEER
05/15/2024

ISSUED FOR

ISSUED FOR PROPOSAL AND PERMIT

REVISIONS

No.	DESCRIPTION	DATE

KEY PLAN

SHEET TITLE

CIVIL DETAILS-9

SCALE: As indicated

DATE: 05/15/2024

PROJECT NUMBER: 2319

SHEET NUMBER

C6.09

Special Notes for Protection of Existing Trees:

1. Tree protection fencing shall be installed to eliminate activities detrimental to trees including but not limited to the following:

   a. Soil compaction in the critical root zones resulting from heavy equipments, vehicular or excessive pedestrian traffic or storage of equipments or materials.
   b. Root disturbance due to cuts, fills, or trenching works.
   c. Wounds to exposed roots, trunks or limbs by mechanical equipments.
   d. Other activities such as chemical storage, cement truck cleaning, fire, etc. are not acceptable or allowed around existing trees designated to remain on site.

2. Location and types of tree protection devices:
   a. Tree protection devices are to be installed to completely surround the critical root zones (tree dripline) of ail trees to be preserved.

   b. Tree protection fencing shall consists of chain link fencing or accepted substitutes (orange colored fabric mesh membrane). In addition to fencing, where tree trunks are in jeopardy of being damaged by equipments, 2x4 inch boards may be required to be strapped around the trunks of trees.

   c. Tree protection fence may be installed around a grouping of existing trees for better control.

3. All tree protection fencing shall be installed prior to any clearing, grubbing or grading. Tree protection fences must remain in functioning condition throughout all phases of the site development/construction.

4. The contractor shall provide Class One Tree works for ail trees designated to remain on the project site. Work shall include required root pruning; removal of dead/dying branches, trimming/thinning out of tree branches; repair of tree cavities and other tree damages. Trees shall be fertilized annually. A 3-1-1 ratio of nitrogen, phosphorus and potassium containing slow release, non-burning nitrogen should be applied according to manufacturer's instructions.
5. All existing trees to remain shall be maintained bv a certified tree arborist.

6. During construction, no excess soil, additional fill, equipment, liquids or construction debris shall be placed inside the protective barrier, upon the root protection zone, nor shall any soil be removed from within the barrier.

7. The proposed finished grade and elevation of land within the root protection zone of any tree to be preserved shall not be raised or lowered more than one inch. Welling and retaining methods are allowed outside the root protection zone and shall be done in conformance with the Texas A & M University, Extension Landscape Horticulture, Protecting Existing Landscape Trees from Construction Damage Due to Grade Changes", Everett E. Janne and Douglas F. Welch, PhD, authors.

Landscape Requirements:

1. Perform all work in accordance with all applicable laws, codes, and regulations required by authorities having jurisdiction over such work and provide all inspections and permits required by Federal, State, and local authorities in supply, transportation, and installation of materials.

2. The contractor shall be responsible for the verification of all underground utility lines (telephone, gas, water, electrical, cable, TV, etc.) and all overhead utility easements prior to start of any planting works.

3. All plant materials shall possess the following minimum qualities:
   a. Plants shall be nursery grown in accordance with good horticultural practices under climatic conditions similar to those of the project for at least twelve months.
   b. All plants shall be heavy, symmetrical, tightly knit, so trained or favored for development and appearance as to be superior in form, number of branches, compactness, and symmetry.
   c. Plants shall be sound, healthy and vigorous, well branched, and densely foliated when in leaf. They shall be free of disease, insects, pests, eggs, or larvae.
   d. All plants shall be true of species and variety and shall conform to measurements (caliper size, trunk heights, spread) as specified on the drawings.
   e. Container grown stock when specified shall have grown in the container in which delivered for at least six months, but not over two years. Samples must prove no rootbound conditions exist.
   f. Caliper measurements shall be taken at a point on the trunk six inches (6") above natural ground line for trees up to four inches (4") in caliper.
   g. All trees shall be staked by a minimum of two metal "T" stakes for single trunk trees and three stakes for all multi-trunk trees.

4. Planting mix shall be thoroughly mixed in the following proportions:
   a. Prepared soil as backfill for shade and ornamental trees shall be: 5 part clay loam topsoil + 2 part compost + 1 part sharp sand + 4 Lbs. Commercial fertilizer per CY Or 10 Lbs. Organic fertilizer.
   b. Prepared soil as backfill for shrubs and groundcovers and seasonal colors shall be: 1 part enriched mulch + 1 part compost bark mulch + 1 part enriched topsoil + 1 part No. 1 Bank Sand + 3 Lbs. Time- released fertilizer, 14-14-14 per CY or 8 Lbs. Organic fertilizer.

5. Excavation work and Surface drainage works shall conform to the following requirements:
   a. Test drainage of plant beds and plant pits by filling with water twice in succession. Conditions permitting the retention of water for more than 24 hours shall be brought to the attention of the Owner.
   b. Work shall include the final responsibility for proper surface drainage of planted areas. Any obstructions on the site, or prior work done by another part, which precludes establishing proper drainage shall be brought to the attention of the Owner in writing.
   c. Excavate each tree hole 18" deep plus the depth of the tree container size (15 gal. Or 30 gal. Or 65 gal. Or 100 gal.).
   d. Excavate entire shrub bed to a depth of 8" plus the depth of the shrub container size (5 gal.) unless noted as being pit planted on landscape legend.
   e. Excavate entire groundcover bed to a depth of 6" plus the depth of the groundcover container size (4" pot or 1 gal.).

6. Additional work requirements on landscape areas:
   a. Prior to installation of any planting works (trees, shrubs,groundcover and grass works); apply "Round Up" in all planting areas to eradicate all weed growths on site.
   b. **ADD ALTERNATE:** Install weed control barriers in all trees, shrub and groundcover planting areas. Weed barrier fabric shall be back polypropylene sheet 27 mils thick, 4 oz/s.y. grab tensile strength per ASTM D-4632; 90 lbs. (machine direction) 50 lbs.(cross machine direction). Provide DeWitt "Weed Barrier" or approved substitute.
   c. Use **"Shovel Edge"** to separate all plant beds from grass areas.
   d. Spread a minimum two inch layer of pine bark mulch overall shrub and groundcover bed areas.

7. Landscape maintenance work by the Landscape Contractor after final acceptance shall include the following:
   a. The maintenance period shall commence upon inspection and approval at Final Acceptance and shall be for a period of Sixty Days (60).
   b. The landscape contractor shall coordinate the watering program for all the landscape work with the Owner.
   c. Maintenance of new plantings shall consist of watering, cultivating, weeding, mulching, restaking, tightening and repair of guys; resetting plants for proper grades or upright position, and furnishing and application of pesticides/herbicides; sprays, and invigorants as are necessary to keep plantings free of insects and disease and in a thriving condition.

8. Warranty Periods, Plant Guarantees, and Replacements:
   a. Planting supplied shall be warranted to remain alive and healthy for a period of twelve months (12) after the date of Final Acceptance by Owner. Plants in an impaired, dead, or dying condition after initial acceptance or within 12 months shall be removed and replaced immediately to the satisfaction of the Owner.

Grass Hydromulching Work Requirements:

1. Grass works:
   a. Seed which has become wet, moldy and otherwise damaged in transit or in storage will not be acceptable.
   b. All grass seed shall be fresh, re-cleaned grass seed of the latest crop, mixed in the following proportions by weight and meeting the accepted standards of pure live seed content, purity and germination.
   c. Grass seed shall have the following minimum ratio:
      Summer Mix:
      Cynodon Dactylon (Hulled Common Bermuda Grass) 85% pure live seed at 75 Lbs. Pure live seed per acre.
      Winter Mix:
      Cynodon Dactylon (Unhulled - Common Bermuda Grass) 85% pure live seed at 75 Lbs. Pure live seed per acre. Annual Rye Grass or equal, 85% pure live seed at 175 Lbs. Pure live seed per acre.
2. Slurry Mix Component per Acre shall be Wood cellulose fiber mulch = 2,000 pounds + Grass Seed as specified + fertilizer (13-13-13) 800 pounds.
3. Hydromulched seeding on Prepared finished grades:
   a. Install and spread out a minimum of one inch layer of topsoil over all areas to be hydromulched.
   b. Bed preparation: Immediately after the finished grade has been approved, begin hydroseeding operation to reduce excessive weed growth and erosion.
   c. Apply seed, fertilizer and mulch by spraying them on the previously prepared seedbeds in the form of an aqueous mixture and by using the methods and equipment described herein.
   d. Particular care shall be exercised by the contractor to insure that the application is made uniformly and at the prescribed rate and to guard against miss and overlapped areas.
   e. Where slope of areas to be grassed exceed a 3:1 H:V; an erosion control fabric shall be installed prior to hyromulching process.
4. Maintenance:
   a. Maintenance shall consist of weeding, fertilizing, insect control, watering, replanting, mowing, maintaining of existing grades and repair of any erosion damages.
   b. Guarantee growth and coverage of hydromulch planting shall be a minimum on ninety five percent 95% of the area planted will be covered with specified planting after sixty days with no bare spots visible.
   c. Watering: Coordinate with the Owner to properly operate irrigation system to assure a regular, deep watering program.
5. Inspection and Final Acceptance:
   Final acceptance of lawn establishment shall mean that hydroseed areas are Ninety Five percent 95% uniform coverage of grass in excess of one inch height. No bare spots will be acceptable.

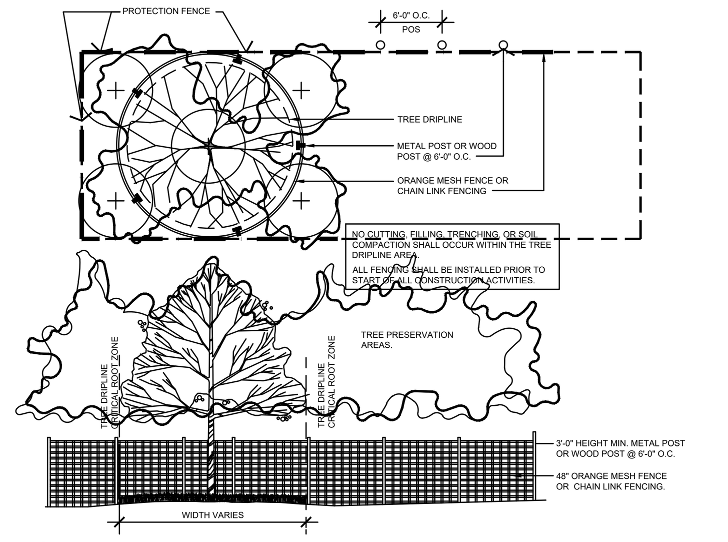

A L1.1 **TREE PROTECTION FENCE DETAIL**
SCALE: NTS

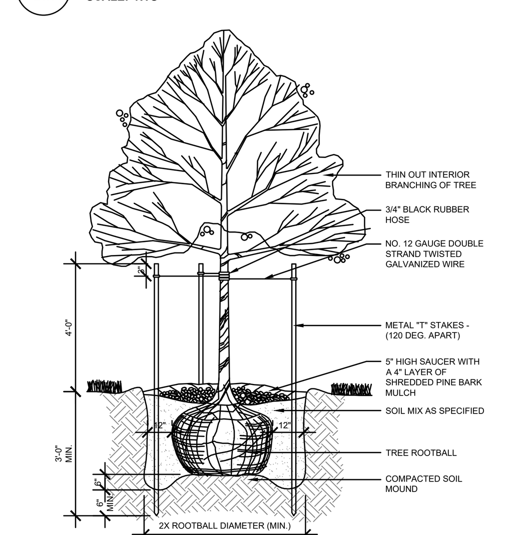

B L1.1 **SINGLE-TRUNK TREE PLANTING**
SCALE: NOT TO SCALE

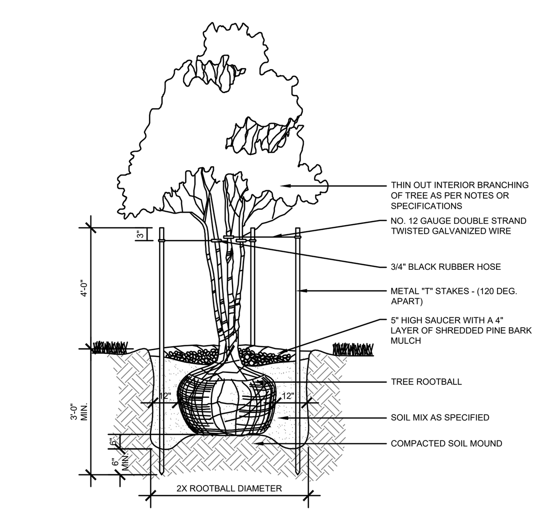

C L1.1 **MULTI -TRUNK TREE PLANTING**
SCALE: NOT TO SCALE

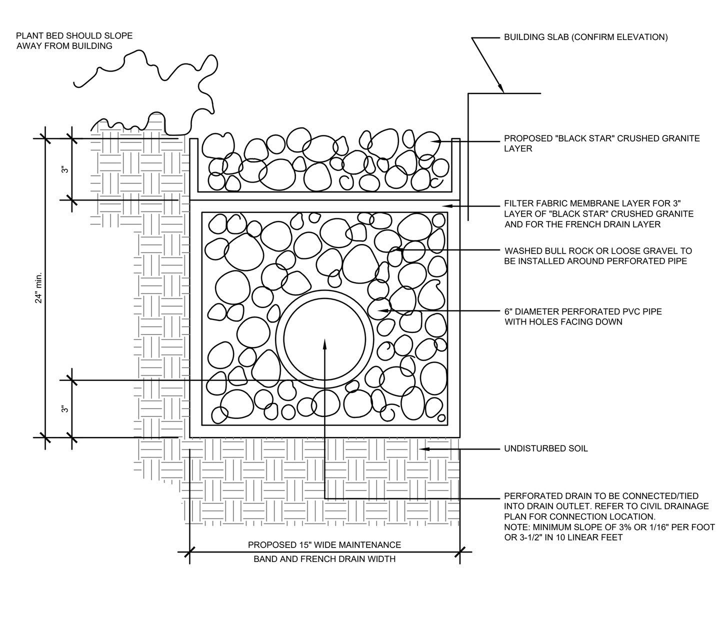

D L1.1 **MAINTENANCE BAND AND FRENCH DRAIN DETAIL**
SCALE: NOT TO SCALE

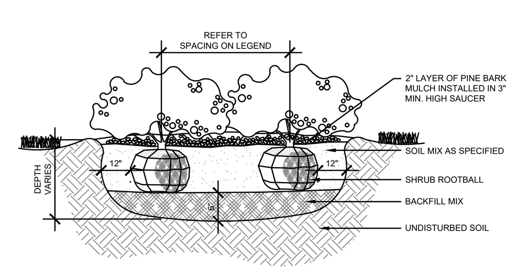

E L1.1 **SHRUB PLANTING**
SCALE: NOT TO SCALE

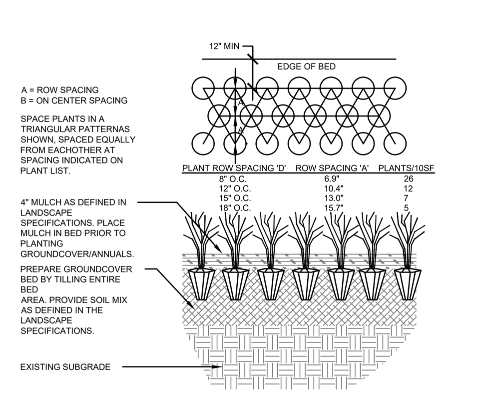

F L1.1 **GROUNDCOVER PLANTING**
SCALE: NOT TO SCALE

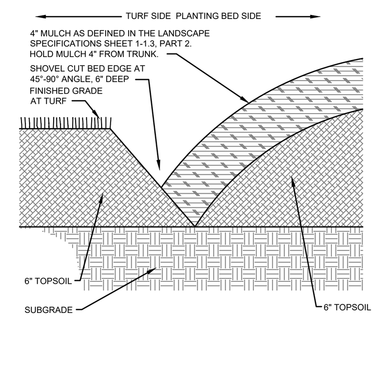

G L1.1 **SHOVEL CUT BED EDGE**
SCALE: NOT TO SCALE

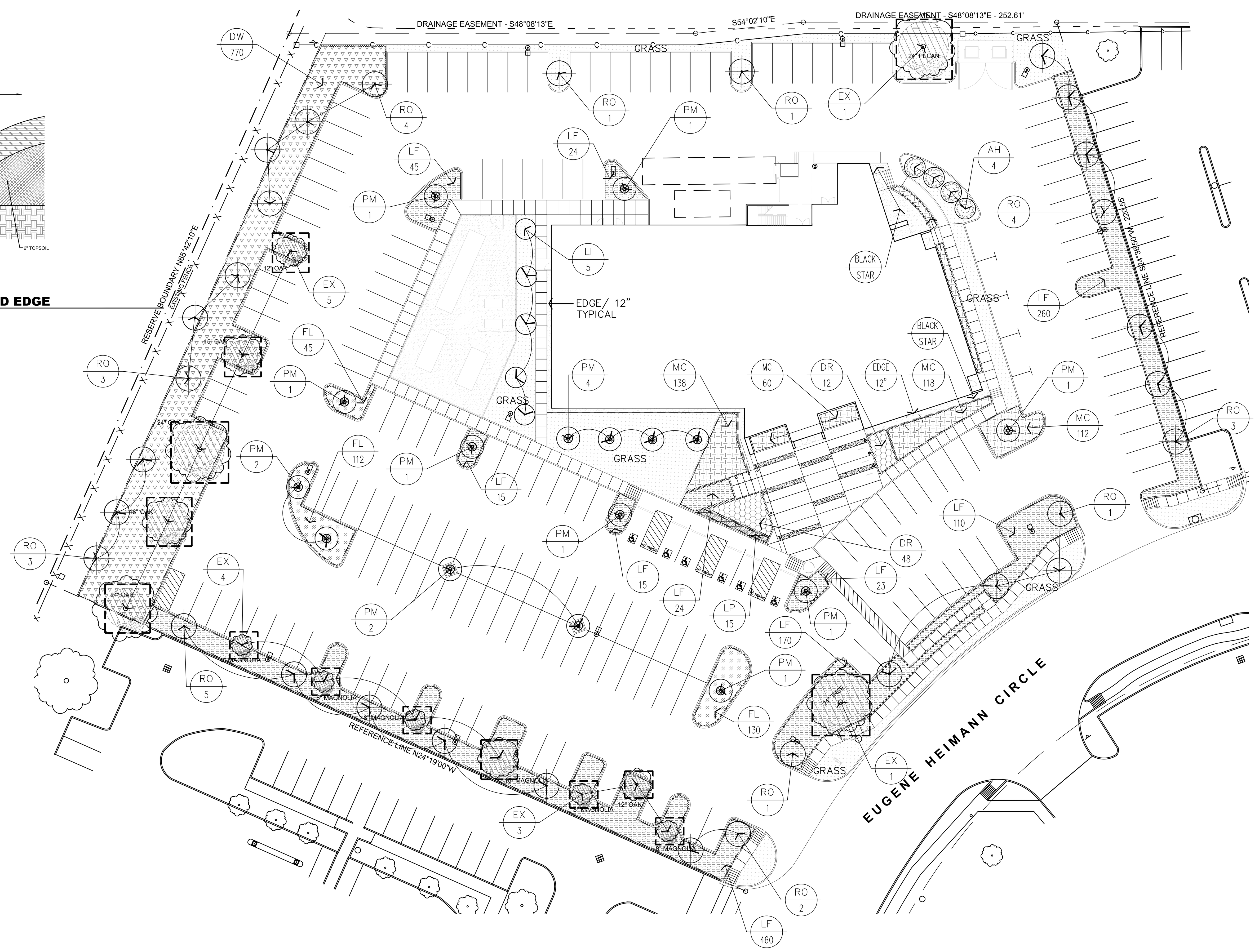

Landscape Legend:

Symbolic Name	Quantities (Verify)	Botanical Name	Common Name	Size and Plant Requirements
EX	14			Existing Trees to be fence protected. The services of a certified arborist shall be engaged to provide tree work services to include canopy pruning, root pruning, tree fertilization and all other work required to safeguard existing trees in anticipation of upcoming construction work.
RO	31	Quercus Buckleyi	Texas Red Oak	3.5" cal. 65 gal. container; 12' to 14' ht.
PM	16	Platanus Mexicana	Mexican Sycamore	3.5" cal. 65 gal. container; 12' to 14' ht.
LI	5	Lagerstroemia Indica	Basham Pink Crepemyrtles	3.5" cal. 65 gal. container; 10' to 12' ht. multi trunk.
AH	4	Ilex Opaca	American Holly	3.5" cal. 65 gal. container; 10' to 12' ht. Single trunk. Tree form.
DW	770	Myrica Pusila	Dwarf Waxmyrtles	5 gal. planted at 36" o.c. triangularly spaced
LF	1146	Leucphyllum Frutescens	Silver Cloud Texas Sage	5 gal. planted at 36" o.c. triangularly spaced.
DR	60	Rosa Drift Red	Drift Red Roses	5 gal. planted at 30" o.c. triangularly spaced.
FL	287	Daniella Tasmanica	Variegated Flax Lily	1 gal. planted at 24" o.c. triangularly spaced.
MC	428	Muhlenbergia Capillaris	Pink Muhly	1 gal. planted at 24" o.c. triangularly spaced.
LP	15	Loropetalum Chinenses	Purple Pixie Loropetalum	5 gal. planted at 30" o.c. triangularly spaced.
Grass	Verify SF.	Cynodon Dactylon	Common Bermuda	**Hydromuch** for all areas within limits of the project + all right of way areas. All areas to be grassed shall be cleaned up of all construction debris prior to find grading works. All areas to be fine graded to adhere to civil grading/drainage plan.
Edge	Verify LF.	Proposed 12" wide maintenance band to be constructed along building edge.		Excavate a 12" wide channel to a depth of 3". Compact subgrade and slope away from building. Install geotextile filter fabric membrane over entire channel and fill channel with Black Star crushed granite. Use Permaloc aluminum edge as restraint.
Black Star	Verify SF.	Areas around building to be with Black Star crushed granite.		Excavate entire noted areas to be a depth of 3" minimum. Compact and slope areas away from building. Install Geotextile filter fabric membrane over excavated areas areas prior to installing Black Star crushed granite.

Owner's Responsibility For Maintenance
Client acknowledges and agrees that proper Project maintenance is required after the Project is complete. A lack of or improper maintenance in areas such as, but not limited to, operation and maintenance of automatic irrigation system, all site drainage and all planting materials maintenance may result in damage to property or persons. Client further acknowledges that he is solely responsible for the results of any lack of or improper maintenance.

Landscape Contractor's Responsibilities:
All drainage (surface and subsurface) of all landscape areas within the project limits shall be the responsibility of the installing landscape contractor and landscape maintenance company. All grading of areas along all building areas must absolutely have positive slope away from building. In no case shall any plant bed be constructed along edge of building that will impede water flow away from building. If planting beds are located at edges of building, landscape contractor shall make sure that these areas drain properly (surface and subsurface-wise). Contractor shall install moisture barrier along building as necessary to keep water from penetrating underneath building slab.

"REFER TO FINISHED GRADES SHOWN ON PROJECT CIVIL GRADING PLAN. IT WILL REPRESENT FINAL ELEVATIONS. CARE SHOULD BE TAKEN BY THE LANDSCAPE CONTRACTOR NOT TO INCREASE THESE FINISHED GRADES WITH LANDSCAPING OR OTHER ALTERATIONS. THE THICKNESS OF SOD, GRASS AND LANDSCAPING MATERIALS SHOULD BE DEDUCTED FROM THE FINISHED GRADE ELEVATIONS IN THESE CIVIL GRADING PLANS IN ORDER TO DETERMINE THE GROUND ELEVATIONS DURING CONSTRUCTION."

0 5' 15' 30' 60'
SCALE: 1" = 30'

1 L1.1 **LANDSCAPE PLAN**
SCALE: 1" = 30'-0"

FSGROUP TEAM+BUILD
16575 Village Drive
Houston Texas 77040
713 344 1752 PH
fsdesignbuild.com

PROJECT NAME

INFORMATION TECHNOLGY BUILDING
EUGENE HEIMANN CIRCLE
FORT BEND COUNTY . RICHMOND . TEXAS

CONSULTANTS

Wong & Associates, Inc.
P.O. Box 2026 Bellaire, Texas 77402-2026
Tel. 713-777-3198 Cell : 713-557-9298
Member: American Society of Landscape Architects

PROFESSIONAL SEAL

ISSUED FOR

ISSUED FOR PROPOSALS AND PERMIT

REVISIONS

No.	DESCRIPTION	DATE

KEY PLAN

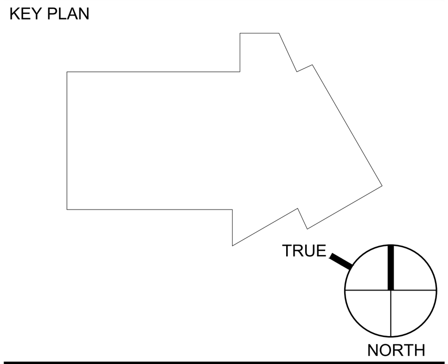

SHEET TITLE

LANDSCAPE PLAN

SCALE	As indicated
DATE	05/15/2024
PROJECT NUMBER	2319

SHEET NUMBER

L1.1

Irrigation General Notes:

1. ALL materials and equipment shall conform to all applicable State of Texas, City and County codes.
2. The irrigation contractor shall be responsible for securing all permits prior to actual work on site.
3. The intent of the 100% coverage of all landscape areas.
4. Prior to commencement of work, the irrigation contractor shall contact the Owner to coordinate all required inspections.
5. Extreme care shall be exercised in excavating and working near existing utility easements. The irrigation contractor shall be responsible for the verification of all utility locations (telephone, TV, gas electrical, water, cable, etc.). The irrigation contractor shall be responsible for all damages inflicted on any and all utility lines.
6. The Irrigation contractor shall at all times protect his work from damage and theft and replace all damaged or stolen parts at his expense until receipt of the Certificate of Substantial Completion from the Owner.
   The Irrigation contractor shall flush and adjust the system for optimum performance. This shall include regulating the pressure at each valve to obtain the optimum operating pressure for each system.
7. Use glue joints in mainline passing through sleeves under pavement. PVC sleeves shall be Schedule 40 and shall extend 24" out of the nearest existing pavement areas for easy location. The irrigation contractor shall be responsible for coordinate all sleeve locations on the project site with the Owner and/or general contractor.
8. The irrigation contractor shall also comply to these additional special requirements to the irrigation system shall include the following.
   a. All mainlines shall have a minimum of 18" of cover **(Sch. 40 PVC Pipe.)**.
   b. All lateral and sub-main pipe to have a minimum of 12" of cover **(Sch. 40 PVC Pipe.)**.
   c. No rocks, boulders or other extraneous materials shall be used for backfilling of trenches.
   d. All pipes to be installed as per manufacturer's specifications.
   e. All threaded joints to be coated with Teflon tape or Liquid Teflon.
   f. All lines to be thouroughly flushed before installation of any sprinkler heads.
   g. Sprinkler and related equipments shall be installed as per manufacturer's specification.
   h. No electrical connections shall be made in the field except at a valve control box or another valve box specifically for connections.
   i. All 24 volt wire shall be No. 12UF/UL for common wire and No. 14 UF/UL for control wires, direct burial shall be solid copper.
   j. The irrigation contractor shall be responsible for proper coverage of areas to be watered; i.e. adjust heads with insufficient coverage due to blockage by existing or proposed site features or sizing down sprinkler heads to avoid excessive overthrow.
   k. The irrigation contractor shall refer to landscape planting plan to keep sprinkler equipments and accessory materials from interfering with proper planting; i.e. Verify rootball size for planting; configuration of shrub/groundcover beds, etc.
   l. The irrigation contractor shall provide expansion coils at each wire connection in valve box (wrap around 3/4" pipe 12 times).
   m. The irrigation contractor shall utilize appropriate automatic drain device where low head drainage may occur.
   n. All sprinkler heads shall be mounted on swing joints unless otherwise noted.
   o. The irrigation contractor shall install a separate common for each controller.
   p. 24 Volt wire shall be color coded: Common shall be white and Control red.
   q. The irrigation contractor shall install manufacturer's recommended grounding equipment for power supply and valve output with (2) 5/8" copper clad ground rods.
   r. The irrigation contractor shall install manufacturer's recommendation on fault ground and lightning protection.
   s. The irrigation contractor shall furnish the owner with the following : 2 wrenches for disassembling and adjusting each type of sprinkler heads and valves + 2 keys for the automatic controller +2 quick coupler keys with matching hose swivels.
   t. The irrigation contractor shall add extension risers to pop up sprinklers when needed for proper coverage. Coordinate with landscape contractor as to where risers for sprinkler heads are required.
   u. The irrigation contractor shall install sprinkler equipments 12" from all buildings foundations and install sprinklers 4" from any curbs or walkways.
   v. The irrigation backflow prevention device shall be installed within areas of proposed shrub plantings. The purpose of this is to keep the device screened from view.
9. The entire irrigation system (labor and materials) shall be guaranteed and warranted for a period of one year. The warranty period shall commence upon final acceptance by Owner of all landscape and irrigation works.
10. The irrigation contractor for the project must be licensed to do business within the State of Texas , as required by TCEQ."
11. This irrigation plan is diagrammatic only. Irrigation contractor shall provide final irrigation design layout plan complete with licensed irrigator's seal and signature. All applicable design calculations shall be shown on this irrigation plan to comply with all TCEQ requirements.

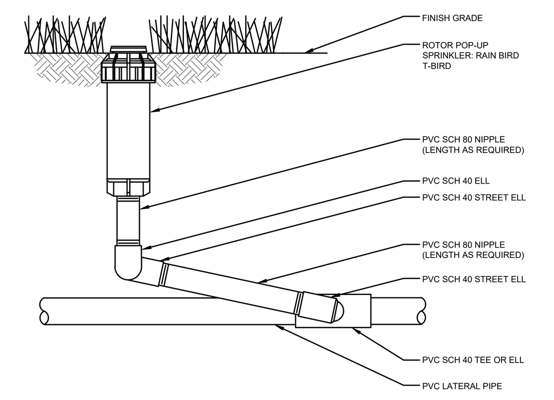

A L2.1 **ROTARY SPRINKLER**
SCALE: NOT TO SCALE

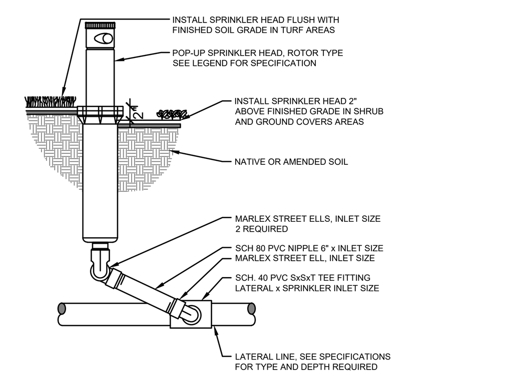

B L2.1 **POP-UP SPRINKLER ROTOR TYPE (6")**
SCALE: NOT TO SCALE

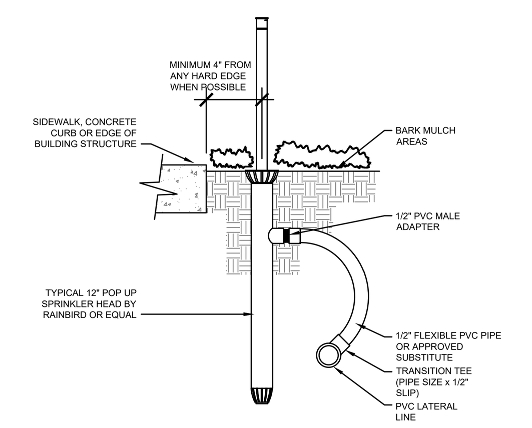

C L2.1 **POP UP SPRAY HEAD (12")**
SCALE: NOT TO SCALE

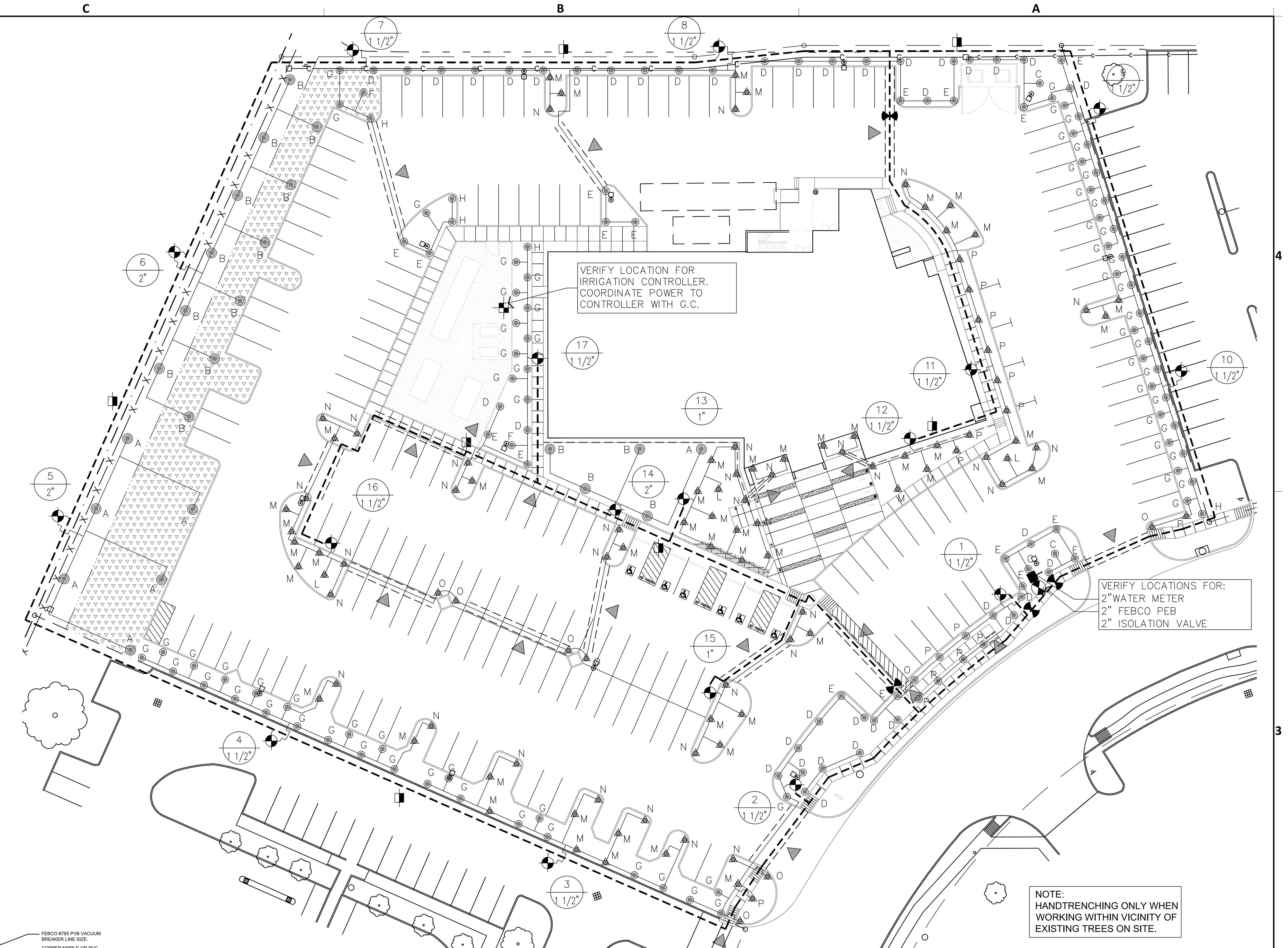

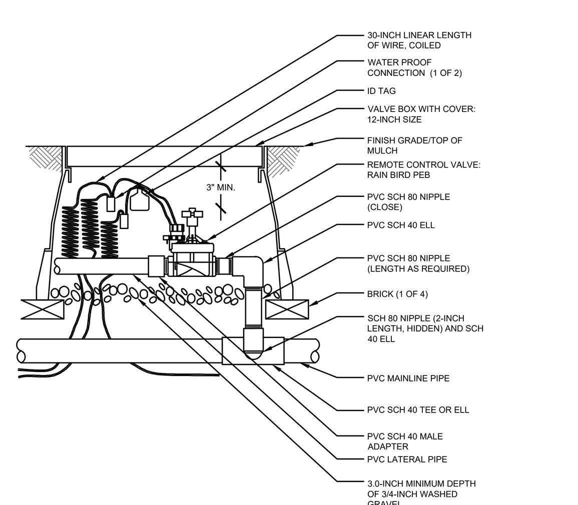

D L2.1 **REMOTE CONTROL VALVE**
SCALE: NOT TO SCALE

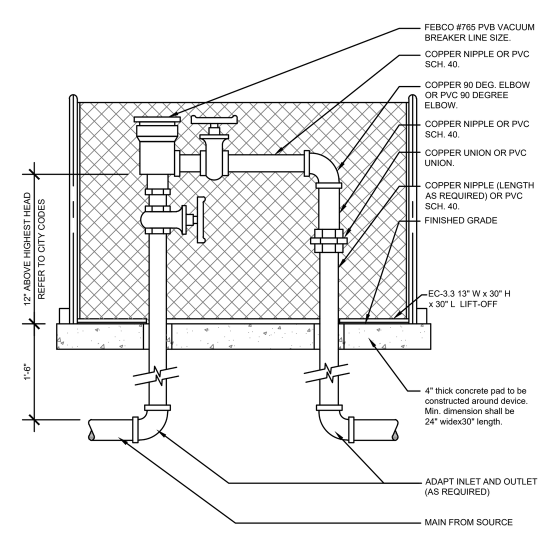

G L2.1 **BACKFLOW PREVENTER**
SCALE: NOT TO SCALE

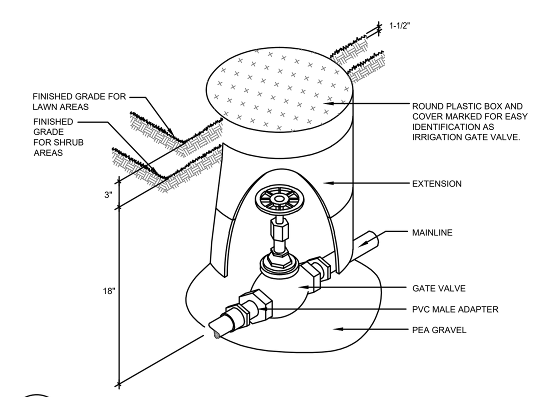

J L2.1 **GATE VALVE**
SCALE: NOT TO SCALE

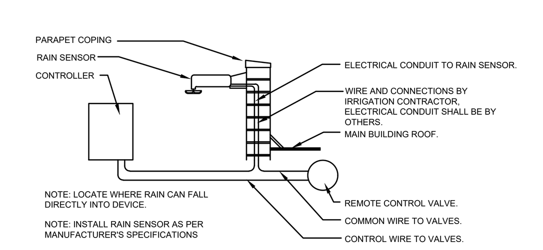

L L2.1 **RAIN SENSOR INSTALLATION DETAIL**
SCALE: NOT TO SCALE

Irrigation Legend:

Sym	Sym	Irrigation Equipment and Manufacturer	Sprinkler Specification	GPM
		Hunter I-20 Rotary Sprinkler		
A		I-20-ADS 4"-4.0 nozzle Part Circle	38'-0" radius	2.40
B		I-20-ADS 4"-1.0 nozzle Part Circle	30'-0" radius	2.00
		Rainbird 1806 Pop Up Sprinkler or equal.		
C		RB 1806 Full 360 degree	15'-0" radius	3.70
D		RB 1806 Half 180 degree	15'-0" radius	1.85
E		RB 1806 Qtr. 90 degree	15'-0" radius	0.95
F		RB 1806 Full 360 degree	12'-0" radius	2.60
G		RB 1806 Half 180 degree	12'-0" radius	1.30
H		RB 1806 Qtr. 90 degree	12'-0" radius	0.65
J		RB 1806 Low Angle End Strip Nozzle	4'x15'	0.61
K		RB 1806 Low Angle Center Strip Nozzle	4'x30'	1.21
		Rainbird 1812 Shrub Pop Up Sprinkler or equal.		
L		RB 1812 Full 360 degree mounted on 24" Sch. 40 riser	12'-0" radius	2.60
M		RB 1812 Half 180 degree	12'-0" radius	1.30
N		RB 1812 Qtr. 90 degree	12'-0" radius	0.65
O		RB 1812 Low Angle End Strip Nozzle	4'x15'	0.61
P		RB 1812 Low Angle Center Strip Nozzle	4'x30'	1.21
		Rainbird PEB series Electric Remote Control Valves with sizes as noted plan.		
		Gate Valve		
		One (1) 2" WATER METER Supplied and installed by irrigation contractor for the irrigation system. Water meter to be installed as per city and county codes.	Verify point of connection.	
		One (1) 2" FEBCO PEB & 2" ISOLATION VALVE to be installed as per city and county code by irrigation contractor. Install **BPDI Guardshack Enclosure GS-3.3** to protect backflow devices. Verify location on site.		
		Rainbird 33 DRC quick coupling valve (valves to be installed below grade inside valve box)	Total **(7)** field located on site.	
		One (1) Rainbird ESP 24 LXME Irrigation controller. Verify location and coordinate electrical requirements for controller with General contractor and / or owner. Install **Rainbird Rain Sensors** within close proximity of controller location. Verify location with Owner.		
		Pressure Line shall be **2"** sch. 40 PVC pipe. Install "Thrust Blocks" as required. Install appropriate Gate Valves where noted.		
		6" Sch. 40 PVC irrigation sleeves unless noted as 4" on plan. Verify location of all sleeves on project site.		
		1/2" Sch. 40 PVC non pressure line. 3/4" Sch. 40 PVC non pressure line. 1" Sch. 40 PVC non pressure line. 1-1/2" Sch. 40 PVC non pressure line.		
		Sequence of Irrigation Valve Size of Irrigation Valve		

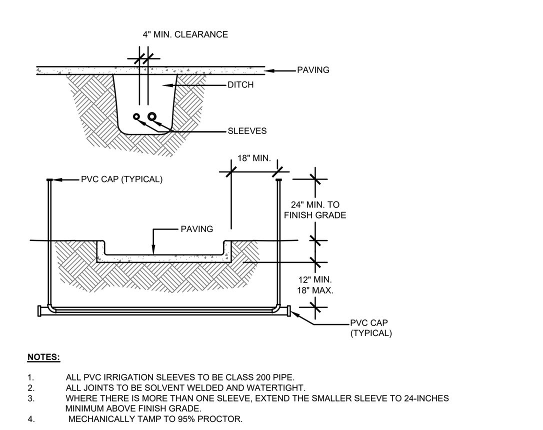

E L2.1 **SLEEVING**
SCALE: NOT TO SCALE

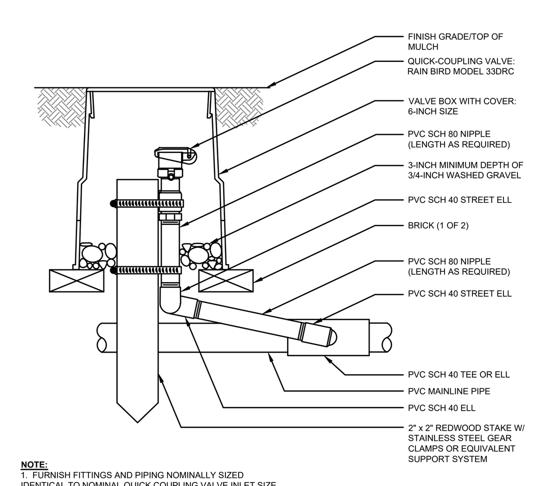

H L2.1 **QUICK COUPLING VALVE**
SCALE: NOT TO SCALE

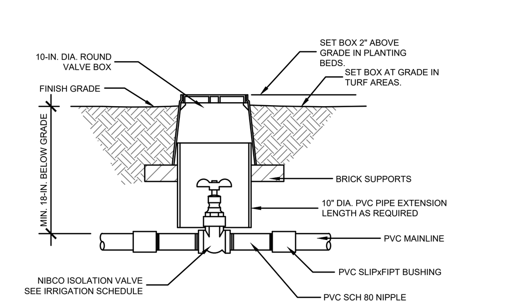

K L2.1 **ISOLATION/SHUT-OFF VALVE**
SCALE: NOT TO SCALE

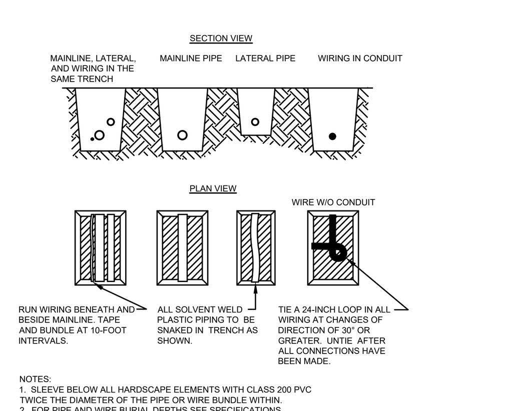

F L2.1 **TRENCH DETAIL**
SCALE: NOT TO SCALE

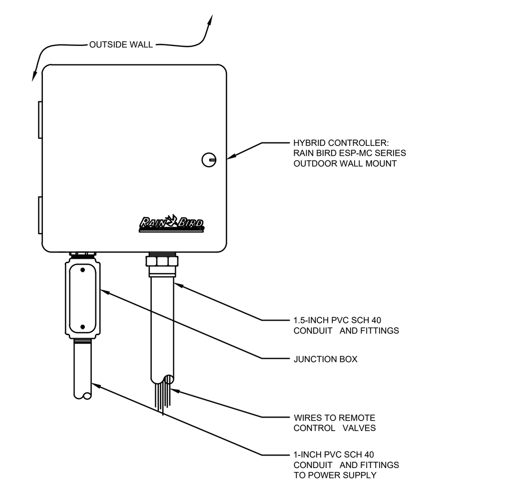

I L2.1 **IRRIGATION CONTROLLER**
SCALE: NOT TO SCALE

DESIGN DISCLAIMER:

This irrigation drawing is a preliminary layout. It is a diagrammatic representation for purpose of providing a basic depiction of the scope of coverage, initial valve zoning, with head type and placement. The Irrigation drawing does not provide necessary zone flow, hydraulic calculations to determine Design Pressure. These are defined in Texas Administrative Code *§§344.61 Minimum Standards for Design of the Irrigation Plan* , and required by the T.C.E.Q for a complete Irrigation Plan and for Permit and Construction. It will be the responsibility of the installing licensed irrigator or irrigator-in-charge, to use information provided on this Preliminary Irrigation drawing, to provide a final Irrigation Plan meeting all standards as required by T.C.E.Q, Signed and Sealed.

Wong & Associates, Inc. shall not be responsible and accepts no liability for design failure, inaccurate head layout, incorrect hydro-zoning, pipe sizing, zone flow or hydraulic calculations, irrigation equipment, or aspects of the preliminary design drawing not in compliance with local irrigation regulations. The irrigation contractor shall be ultimately responsible for the final design, installation and proper operation of the irrigation system.

Disclaimer

Wong & Associates, Inc. shall not be responsible for the operation and/or maintenance of this irrigation system, once the date of final acceptance by the owner is established. All grades and elevations on the project shall be set by the project civil engineer. The Owner shall be responsible for the monitoring and the maintaining of the irrigation system. Monthly moisture sensor tests of all sprinkler zones around all building pads and on entire property, shall be performed by the Owner to ensure that no over-watering and/or any irrigation system leaks are present. The irrigation contractor shall be responsible for providing all guarantee and warranties for the irrigation system. The irrigation contractor shall be ultimately responsible for the installation and proper operation of the irrigation system.

0 5' 15' 30' 60'
SCALE: 1" = 30'

1 L2.1 **IRRIGATION PLAN**
SCALE: 1" = 30'-0"

FSGROUP TEAM+BUILD
16575 Village Drive
Houston Texas 77040
713 344 1752 PH
fsdesignbuild.com

PROJECT NAME

INFORMATION TECHNOLGY BUILDING
EUGENE HEIMANN CIRCLE
FORT BEND COUNTY . RICHMOND . TEXAS

CONSULTANTS

Wong & Associates, Inc.
P.O. Box 2028 Bellaire, Texas 77402-2028
Tel. 713-777-9198 Cell : 713-557-9298
Member: American Society of Landscape Architects

PROFESSIONAL SEAL

ISSUED FOR

ISSUED FOR PROPOSALS AND PERMIT

REVISIONS

No.	DESCRIPTION	DATE

KEY PLAN

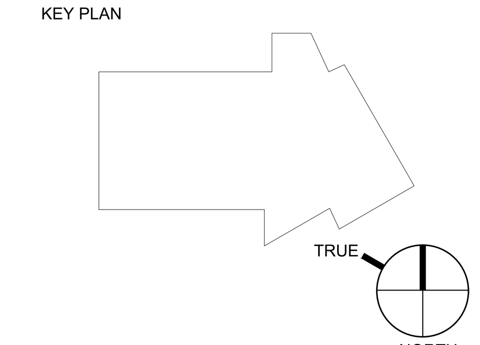

SHEET TITLE

IRRIGATION PLAN

SCALE: As indicated

DATE: 05/15/2024

PROJECT NUMBER: 2319

SHEET NUMBER

L2.1

MARK	SHEET NUMBER	SHEET NAME	ISSUE DATE	REVISION DATE
	S001	3D VIEW AND SHEET LIST	05/15/24	
	S101	GENERAL STRUCTURAL CRITERIA	05/15/24	
	S102	GENERAL STRUCTURAL CRITERIA	05/15/24	
	S110	FOUNDATION PLAN LEVEL 1	05/15/24	
	S111	FRAMING PLAN LEVEL 2	05/15/24	
	S112	FRAMING PLAN LEVEL 3	05/15/24	
	S150	ROOF FRAMING PLAN	05/15/24	
	S301	SPREAD FOOTING & PLINTH SCHEDULE & DETAILS	05/15/24	
	S302	GRADE BEAM SCHEDULE AND DETAILS	05/15/24	
	S303	STEEL COLUMN SCHEDULE & DETAILS	05/15/24	
	S401	TYPICAL FOUNDATION DETAILS	05/15/24	
	S402	TYPICAL SITE FOUNDATION DETAILS	05/15/24	
	S403	FOUNDATION DETAILS	05/15/24	
	S404	FOUNDATION DETAILS	05/15/24	
	S501	TYPICAL FRAMING DETAILS	05/15/24	
	S502	TYPICAL FRAMING DETAILS	05/15/24	
	S503	TYPICAL COMPOSITE FRAMING DETAILS	05/15/24	
	S504	TYPICAL ROOF FRAMING DETAILS	05/15/24	
	S505	TYPICAL ROOF FRAMING DETAILS	05/15/24	
	S601	COMPOSITE FRAMING DETAILS	05/15/24	
	S701	FRAMING DETAILS	05/15/24	
	S702	LOW ROOF FRAMING DETAILS	05/15/24	
	S801	BRACE ELEVATIONS & DETAILS	05/15/24	
	S802	BRACE ELEVATIONS	05/15/24	

STRUCTURAL

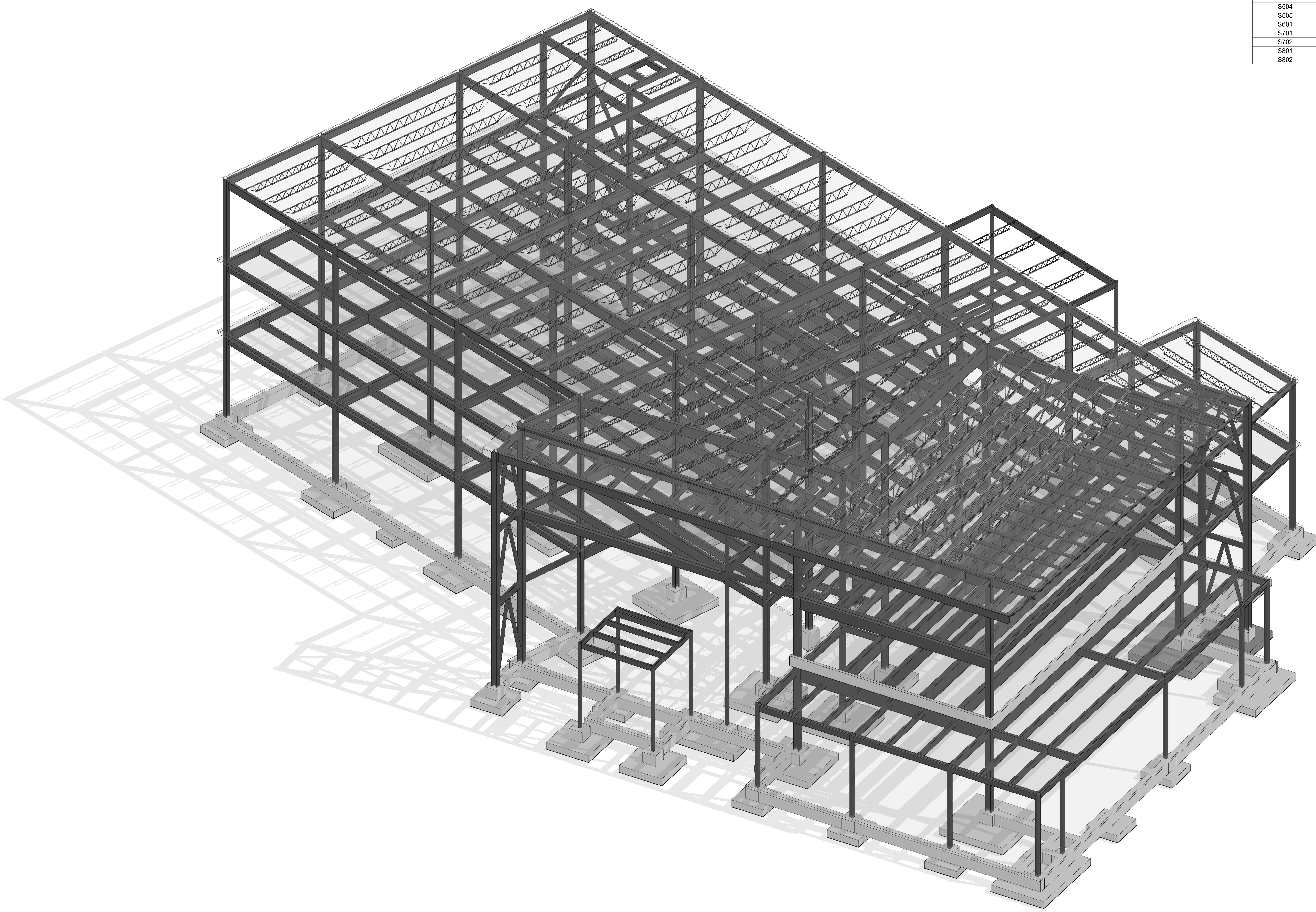

1 PRESENTATION 3D VIEW

FSGROUP® ARCHITECTS
16575 Village Drive
Houston Texas 77040
713 344 1752 PH
fsdesignbuild.com

PROJECT NAME

THE STATE OF TEXAS · FORT BEND COUNTY

INFORMATION TECHNOLOGY BUILDING
EUGENE HEIMANN CIRCLE
FORT BEND COUNTY . RICHMOND . TEXAS

CONSULTANTS

Dally + ASSOCIATES
STRUCTURAL | CIVIL
9800 Richmond Avenue, Suite 460
Houston, Texas 77042
t 713 337 8881
Texas Registered Engineering Firm
F-003426

PROFESSIONAL SEAL

05/15/2024

ISSUED FOR

ISSUED FOR PROPOSALS & PERMIT

REVISIONS

No.	DESCRIPTION	DATE

KEY PLAN

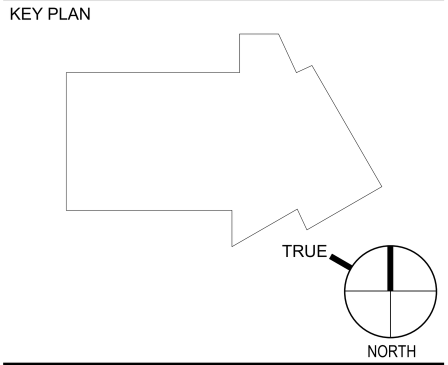

SHEET TITLE

3D VIEW AND SHEET LIST

SCALE

DATE 05/15/24

PROJECT NUMBER 2319

SHEET NUMBER

S001

1. STRUCTURAL ABBREVIATIONS

AASHTO	AMERICAN ASSOCIATION OF STATE HIGHWAY AND TRANSPORTATION OFFICIALS	ELEC	ELECTRICAL	PLF	POUNDS PER LINEAR FOOT
		ELEV	ELEVATOR	PLUMB	PLUMBING
ACI	AMERICAN CONCRETE INSTITUTE	EOD	EDGE OF DECK	PROJ	PROJECTION
		EOS	EDGE OF SLAB	PSI	POUNDS PER SQUARE INCH
ADDL	ADDITIONAL	EQ	EQUAL(LY)	PSF	POUNDS PER SQUARE FOOT
ADJ	ADJACENT	EW	EACH WAY	R	RIGHT, RISER, RADIUS
AISC	AMERICAN INSTITUTE OF STEEL CONSTRUCTION	EXIST	EXIST	RD	ROOF DRAIN
		EXP	EXPANSION	RE	REFER
AISI	AMERICAN IRON AND STEEL INSTITUTE	FD	FLOOR DRAIN	REF	REFERENCE
		F.F.E.	FINISH FLOOR ELEVATION	REINF	REINFORCEMENT (D), (ING), (MENT)
ANSI	AMERICAN NATIONAL STANDARD INSTITUTE	FND	FOUNDATION	REQD	REQUIRED
		FS	FAR SIDE	REV	REVISION
APPROX	APPROXIMATE(LY)	FT	FEET, FOOT	RH	RIGHT HAND
AR	ANCHOR ROD	FTG	FOOTING	RO	ROUGH OPENING
ARCH	ARCHITECTURAL	GA	GAUGE	S	SOUTH, SLAB
ASCE	AMERICAN SOCIETY OF CIVIL ENGINEERS	GALV	GALVANIZED	SCHED	SCHEDULE(D)
		GB	GRADE BEAM	SDI	STEEL DECK INSTITUTE
ASTM	AMERICAN SOCIETY OF TESTING MATERIALS	HORIZ	HORIZONTAL	SECT	SECTION
		HP	HIGH POINT	SF	SQUARE FEET
AWS	AMERICAN WELDING SOCIETY	HR	HOUR	SHT	SHEET
BM	BEAM (MILD REINFORCE)	HSS	HOLLOW STRUCTURAL SECTION	SIM	SIMILAR
BC	BOTTOM CHORD	ID	INSIDE DIAMETER	SJI	STEEL JOIST INSTITUTE
BLDG	BUILDING	IN	INCHES	SL	SLOPE
BOD	BOTTOM OF DECK	JT	JOINT	SPA	SPACE
BOT	BOTTOM	K	KIPS, JOIST SERIES	SPEC(S)	SPECIFICATION(S)
BT	BASE PLATE	KB	KNEE BRACE	SQ	SQUARE
BRG	BEARING	L	SPAN, LEFT, STEEL ANGLE	STD	STANDARD
BPL	BENT PLATE	Ld	DEVELOPMENT LENGTH	STIF	STIFFENER
BS	BOTH SIDES	LG	LENGTH, LONG	STIR	STIRRUP
C	CHANNEL, COMPRESSION	LH	LEFT HAND	STL	STEEL
CAMB	CAMBER	LL	LIVE LOAD	STR	STRUCTURAL
CIP	CAST IN PLACE	LLBB	LONG LEG BACK TO BACK	T	TOP, TENSION
CL	CENTER LINE	LLH	LONG LEG HORIZONTAL	T & B	TOP & BOTTOM
CLR	CLEAR	LLV	LONG LEG VERTICAL	T & G	TONGUE AND GROOVE
COL	COLUMN	LP	LOW POINT	TEMP	TEMPERATURE
CONC	CONCRETE	LW	LONG WAY	THK	THICK(NESS)
CONT	CONTINUOUS	MATL	MATERIAL	TOC	TOP OF CONCRETE
CPL	CAP PLATE	MAX	MAXIMUM	TOF	TOP OF FOOTING
CS	CARBON STEEL	MC	MOMENT CONNECTION, MISC CHANNEL	TOL	TOP OF LEDGE
CSJ	CONSTRUCTION JOINT	MECH	MECHANICAL	TOP	TOP OF PANEL
CTJ	CONTROL JOINT	MFG(S)	MANUFACTURER(S)	TOS	TOP OF STEEL
D	DEPTH	MID	MIDDLE	TOT	TOTAL
DET	DETAIL	MISC	MISCELLANEOUS	TOW	TOP OF WALL
DF	DRILLED FOOTING	ML	MATCH LINE	TRD(S)	TREAD(S)
DIA	DIAMETER	MO	MASONRY OPENING	TOJ	TOP OF JOIST
DIAG	DIAGONAL	MS	MILD STEEL	TYP	TYPICAL
DIM	DIMENSION	MT	STRUCTURAL TEE CUT FROM MISC STEEL	UL	UNDERWRITERS LABORATORY
DL	DEAD LOAD	NORTH	NORTH	UNF	UNIFORM
DN	DOWN	NIC	NOT IN CONTRACT	UON	UNLESS OTHERWISE NOTED
DO	DITTO	NO.	NUMBER	V	BEAM END SHEAR
DWG	DRAWING	NOM	NOMINAL	VB	VERTICAL BRACE
DWL	DOWEL	NTS	NOT TO SCALE	VERT	VERTICAL
E	EAST	OC	ON CENTER	W	WALL, EAST, WIDTH, WIDE FLANGE
EA	EACH	OD	OUTSIDE DIAMETER	W/	WITH
EF	EACH FACE	OPNG	OPENING	WL	WIND LOAD, WATER LEVEL, WORKING LINE
EJ	EXPANSION JOINT	OPP	OPPOSITE		
EL	ELEVATION	PL	PLATE	WP	WATER PROOF, WORKING POINT

2. STRUCTURAL LEGEND

P1	PRECAST CONCRETE PANEL	BEAM	CONNECTED TO A ROLLED SHAPE COLUMN WITH A STANDARD WELDED MOMENT CONNECTION STANDARD AISC ROLLED SHAPE BEAM
F1	SPREAD FOOTING MARK	10K1	STANDARD 'K' SERIES JOIST
P1	PLINTH MARK		STEEL ANGLE BACK TO BACK
C1	COLUMN MARK		STANDARD ROLLED CHANNEL
CF1	CONTINUOUS WALL FOOTING MARK		HOLLOW STRUCTURAL SECTION
BW1	BASEMENT WALL MARK		STANDARD STEEL PIPE
RW1	RETAINING WALL MARK	Ø	DIAMETER
[BP1]	BASE PLATE MARK	#	NUMBER (BAR SIZE)
A	STRUCTURAL STEEL COLUMN SPLICE TYPE		SQUARE
24/24	STRAIGHT SHAFT DRILLED PIER/FOOTING		SLAB DEPRESSION AND AMOUNT
B1 GB1 1B1	MILD REINFORCED CONCRETE BEAM MARK		ELEVATION OF DATUM
J1	MILD REINFORCED CONCRETE JOIST MARK	DIM	DIMENSION TO FACE, COLUMN GRID OR CENTER LINE
	SPAN DIRECTION OF A MILD REINFORCED CONCRETE SLAB WITH MAIN REINFORCING MARK S1		ANGLE IN DEGREES, MINUTES AND SECONDS
DECK TYPE 1	SPAN DIRECTION OF 5 1/2" THICK CONCRETE SLAB W/ TYPE 1 STEEL DECK		REVISION MARK
DECK	SPAN DIRECTION OF A BARE STEEL DECK TYPE 2 WITH NO CONCRETE TOPPING	1 S101	SECTION OR DETAIL REFERENCE (DRAWN AS DETAIL 1 ON SHEET S101)
20KSP	SPECIAL OPEN WEB K SERIES STEEL JOIST, SEE PLAN NOTES FOR LOADING REQUIREMENTS		
W27X84 <24'-0">	STANDARD AISC ROLLED SHAPE OF W27X84 AT ELEVATION 24'-0" FROM DATUM	1 S101	SECTION OR DETAIL REFERENCE (DRAWN AS DETAIL 1 ON SHEET S101)
W27X84 (-2 1/2)	STANDARD AISC ROLLED SHAPE OF W27X84 AT -2 1/2" FROM LEVEL ELEVATION		
W27X84 c=1"	STANDARD AISC ROLLED SHAPE OF W27X84 WITH 1" UPWARD CAMBER		
W27X84 c=1" 20K 20K	STANDARD AISC ROLLED SHAPE OF W27X84 WITH 20 KIPS BEAM END SHEAR		
W27X84 (10)	STANDARD AISC ROLLED SHAPE OF W27X84 WITH 10 HEADED SHEAR CONNECTORS EQUALLY SPACED	2 B	BUILDING GRID LINES "2" AND "B"
W27X84 (10, 6, 12) BEAM BEAM	STANDARD AISC ROLLED SHAPE OF W27X84 WITH 28 HEADED SHEAR CONNECTORS EQUALLY SPACED FROM LEFT TO RIGHT AS 10 CONNECTORS / 6 CONNECTORS / 12 CONNECTORS		

3. STRUCTURAL CONCEPT, STANDARDS AND LOADS

A. DESIGN CONCEPT:

THE STRUCTURE AS SHOWN HAS BEEN DESIGNED IN ACCORDANCE WITH THE BUILDING CODE REQUIREMENTS AND DESIGN STANDARDS TO SUPPORT THE FINAL BUILDING SERVICE LOADS. THE CONTRACTOR SHALL BE RESPONSIBLE FOR PROVIDING ADDITIONAL SUPPORTS FOR THE STRUCTURE IF NECESSITATED BY THE CONSTRUCTION SEQUENCE OR METHODS OF FABRICATION, HANDLING, ERECTION, AND OTHER CONSTRUCTION OPERATIONS.

B. BUILDING CODES AND DESIGN STANDARDS:

1. INTERNATIONAL BUILDING CODE, 2018 EDITION.
2. AMERICAN SOCIETY OF CIVIL ENGINEERS (ASCE); MINIMUM DESIGN LOADS FOR BUILDINGS AND OTHER STRUCTURES, ASCE 7-10, AS AMENDED.
3. AMERICAN CONCRETE INSTITUTE (ACI), BUILDING CODE REQUIREMENTS FOR REINFORCED CONCRETE, ACI 318, AS AMENDED.
4. AMERICAN INSTITUTE OF STEEL CONSTRUCTION (AISC), MANUAL OF STEEL CONSTRUCTION, 13TH EDITION (ASD), 2005, AS AMENDED.
5. AMERICAN WELDING SOCIETY (AWS).
6. STEEL JOIST INSTITUTE (SJI), STANDARD SPECIFICATIONS FOR OPEN WEB STEEL JOISTS AND JOIST GIRDERS.
7. STEEL DECK INSTITUTE (SDI), DESIGN MANUAL FOR COMPOSITE DECKS, FORM DECKS, ROOF DECKS, AND CELLULAR METAL FLOOR DECK WITH ELECTRICAL DISTRIBUTION.
8. AMERICAN IRON AND STEEL INSTITUTE (AISI) "SPECIFICATION FOR THE DESIGN OF COLD FORMED STEEL STRUCTURAL MEMBERS", LATEST EDITION.

C. GRAVITY LOADS:

SUPERIMPOSED LOADS ARE GIVEN IN POUNDS PER SQUARE FOOT (PSF).

BUILDING AREA	DEAD LOAD (PSF)	LIVE LOAD (PSF)
1. SLAB ON GRADE	0	100
2. 2ND AND 3RD FLOOR OFFICES	10	65*
3. ELEVATOR LOBBY	10	100
4. ELEVATED FLOOR CORRIDORS	10	80
5. STAIRS	10	100
6. ROOF	20	20
7. MECHANICAL AREAS	10	150(**)
7. STORAGE	10	125

*INCLUDES AN ALLOWANCE OF 15 PSF FOR PARTITION WEIGHT
**EQUIPMENT WEIGHT IF LARGER

D. LATERAL DESIGN LOADS:

1. WIND LOADS FOR AN ULTIMATE WIND SPEED OF **146** MPH 3-SECOND GUST, WITH EXPOSURE **C** AND A RISK CATEGORY **IV** (ASCE 7-10 METHOD)

2. COMPONENT AND CLADDING PRESSURES ARE AS FOLLOWS:

TYPE	TRIBUTARY AREA	PRESSURES (PSF)		
		CORNER	PERIMETER	FIELD
WALLS	10 FT^2	+54 , -71	-	+54 , -58
ROOF	10 FT^2	+54 , -122	+54 , -122	+24 , -93
PARAPET	10 FT^2	+161 , -109	-	+161 , -95
WALLS	100 FT^2	+46 , -56	-	+46 , -50
ROOF	100 FT^2	+46 , -96	+46 , -96	+19 , -73
PARAPET	100 FT^2	+126 , -85	-	+126 , -79

a. RE: IBC **2018** FOR DESCRIPTION OF CORNER, PERIMETER & FIELD.

b. POSITIVE PRESSURES ARE PRESSURES ACTING TOWARD THE BUILDING.

c. NEGATIVE PRESSURES ARE PRESSURES ACTING AWAY FROM THE BUILDING.

d. VALUES ABOVE ARE FOR ULTIMATE WIND PRESSURES. THE ASD FACTOR FOR NOMINAL PRESSURES IS 0.6.

e. THE CORNER ZONE IS DEFINED AS ANY WALL DISTANCE WITHIN **8'-3"** OF ANY CORNER OF THE BUILDING (**a = 8'-3"**)

E. SEISMIC CRITERIA:

1. IMPORTANCE FACTOR: 1.5
2. RISK CATEGORY: IV
3. MAPPED SPECTRAL RESPONSE ACCELERATIONS:
   a. Ss: 0.07
   b. S1: 0.04
4. SITE CLASS: .... E
5. SPECTRAL RESPONSE COEFFICIENTS:
   a. SDS: 0.106
   b. SD1: 0.107
6. SEISMIC DESIGN CATEGORY: .... B
7. BASIC SEISMIC FORCE-RESISTING SYSTEM: "TBD" (EX: STRUCTURAL STEEL SYSTEMS NOT SPECIFICALLY DESIGNED FOR SEISMIC RESISTANCE)
8. DESIGN BASE SHEAR: 0.010W
9. SEISMIC RESPONSE COEF. (Cs): 0.010
10. RESPONSE MODIFICATION FACTOR (R): 8

F. GROUND SNOW LOADS: 5 PSF

G: SPECIAL LOADS:

1. STAIR TREADS, RAILING AND GUARDRAILS:

ITEM	REQUIRED CAPACITY
TREADS	300 POUNDS AT CENTER
TOP RAILS	50 PLF HORIZONTALLY (DISTRIBUTED)
OTHER RAILS, FILLERS & CONNECTIONS	50 PSF HORIZONTALLY (DISTRIBUTED)
HAND RAILS	200 POUNDS ANY DIRECTION

2. PIPE LOADS WITH WATER:

SIZE	WEIGHT MAX.	SPACING OF HANGERS
4" DIA.	17 PLF	10'-0"
6" DIA.	32 PLF	10'-0"
8" DIA.	50 PLF	10'-0"
10" DIA.	75 PLF	5'-0"
12" DIA.	102 PLF	5'-0"

VALUES ASSUME SCHEDULE 40 STEEL PIPE

4. GENERAL NOTES FOR CONSTRUCTION

A. CONSTRUCTION METHODS, PROCEDURES AND SEQUENCES ARE THE RESPONSIBILITY OF THE CONTRACTOR AND THE CONTRACTOR SHALL TAKE ALL THE NECESSARY MEANS TO MAINTAIN AND PROTECT THE STRUCTURAL INTEGRITY OF ALL CONSTRUCTION AT ALL STAGES.

B. THESE NOTES APPLY TO STRUCTURAL DOCUMENTS SEALED BY THE STRUCTURAL ENGINEER AND ARE INTENDED TO BE COMPLEMENTARY TO AND USED IN CONJUNCTION WITH THE PLANS AND SPECIFICATIONS, INCLUDING THOSE PREPARED BY OTHER DISCIPLINES. CONTRACTOR SHALL REPORT ANY DISCREPANCIES TO THE ARCHITECT/STRUCTURAL ENGINEER IMMEDIATELY. ANY SUCH DISCREPANCIES SHALL BE RESOLVED TO THE MORE STRINGENT REQUIREMENTS, UNLESS OTHERWISE AUTHORIZED BY THE STRUCTURAL ENGINEER.

C. ANY DISCREPANCIES ON THE STRUCTURAL DOCUMENTS SHALL BE IMMEDIATELY BROUGHT TO THE ATTENTION OF THE ARCHITECT/STRUCTURAL ENGINEER PRIOR TO SUBMISSION OF BIDS OR PROPOSALS, OR IF NOT REASONABLE DISCERNABLE DURING PREPARATION OF BIDS AND PROPOSALS, BEFORE COMMENCING THE WORK IN QUESTIONS. NO CHANGE ORDER CONSIDERATION WILL BE GIVEN TO CHANGES FOR WHICH THE ARCHITECT AND/OR ENGINEER WERE NOT CONTACTED PRIOR TO CONSTRUCTION OF THE AFFECTED ITEM.

D. CONTRACTOR SHALL VERIFY ALL DIMENSIONS AND CONSTRUCTION, INCLUDING EXISTING WORK, PRIOR TO COMMENCING WORK. ANY DISCREPANCIES SHALL BE REPORT IMMEDIATELY TO THE ARCHITECT/STRUCTURAL ENGINEER.

E. ALL PROPOSED SUBSTITUTIONS MUST BE EQUAL OR BETTER AND SHALL BE REVIEWED BY THE ARCHITECT/ENGINEER PRIOR TO ANY PERTINENT WORK AND PRIOR TO THE AWARD OF THE CONTRACT.

F. NOT ALL OPENINGS AND OTHER COMPONENTS THAT ARE REQUIRED HAVE BEEN SHOWN IN THE STRUCTURAL DRAWINGS. COORDINATE WITH THE ARCHITECTURAL, MECHANICAL, PLUMBING AND ELECTRICAL DRAWINGS TO DETERMINE WHERE OPENINGS ARE REQUIRED. SIZES OF ALL CHASES, INSERTS, OPENINGS, SLEEVES, FINISHES, DEPRESSIONS, PADS AND OTHER PROJECT REQUIREMENTS. FLOOR PLAN WILL BE FURNISHED FOR THAT PURPOSE.

G. THE CONTRACTOR IS RESPONSIBLE FOR REVIEWING THE MECHANICAL, ELECTRICAL, PLUMBING AND ARCHITECTURAL DRAWINGS TO DETERMINE WHERE OPENINGS ARE REQUIRED IN REINFORCED CONCRETE BEAMS, SLABS AND WALLS.

H. THE CONTRACTOR SHALL SUBMIT SHOP DRAWINGS, DETAILING ALL THE OPENINGS, INCLUDING ADDED REINFORCEMENT AS SHOWN ON THE TYPICAL WALL, SLAB AND BEAM OPENING DETAILS FOR REVIEW.

I. ADDITIONAL REINFORCEMENT ABOVE THAT SHOWN IN THE TYPICAL SLAB AND BEAM OPENING DETAILS MAY BE REQUIRED AND WILL BE REVIEWED ON THE SHOP DRAWINGS.

J. USE THE MANUFACTURER'S CERTIFIED DRAWINGS AND SPECIFICATIONS FOR THE EQUIPMENT ANCHORAGE AND DETAILS.

K. ALL CONSTRUCTION JOINTS SHOWN ON THE STRUCTURAL DRAWINGS SHALL BE INCORPORATED INTO THE CONTRACTOR. ADDITIONAL CONSTRUCTION JOINTS TO FACILITATE CONSTRUCTION SHALL BE LOCATED AND DETAILED ON THE SHOP DRAWINGS FOR REVIEW.

L. HORIZONTAL CONSTRUCTION JOINTS SHALL NOT BE PERMITTED IN BEAMS UNLESS SHOWN ON THE STRUCTURAL DRAWINGS.

M. ALL CONSTRUCTION AND CONTROL JOINTS FOR BEAMS WHICH ARE EXPOSED TO VIEW ARE TO BE LOCATED TO COINCIDE WITH THE ARCHITECTURAL RUSTICATION JOINTS AS SHOWN ON THE BUILDING ELEVATION SHEETS OR AS REVIEWED IN WRITING.

N. SHOP DRAWINGS

1. THE TERM "SHOP DRAWINGS" INCLUDES FABRICATION, MANUFACTURING, ERECTION AND SETTING DRAWINGS, BROCHURES, CERTIFICATES, AND PRODUCT DATA DESCRIBING MATERIALS AND EQUIPMENT. SHOP DRAWINGS SHALL INCLUDE ALL PERTINENT INFORMATION REQUIRED FOR THE ENGINEER TO FULLY EVALUATE THE MATERIALS BEING REPRESENTED BY THE SUBMITTAL INCLUDING THE PHYSICAL PROPERTIES, DIMENSIONS, LOCATIONS AND METHOD OF INSTALLATION.

2. SHOP DRAWINGS WILL BEAR THE REVIEW STAMP OF THE CONTRACTOR INDICATING THAT HE HAS REVIEWED THE DRAWINGS FOR CONFORMANCE WITH THE CONTRACT DOCUMENTS; COORDINATED ITEMS INCLUDED IN THE SUBMITTAL WITH RELATED ITEMS; AND VERIFIED AND COORDINATED DIMENSIONS.

3. REPRODUCTIONS OF THE ENGINEERING DRAWINGS WILL NOT BE ACCEPTABLE AS SHOP DRAWINGS.

4. ANY SHOP DRAWING NOT CONFORMING TO THESE REQUIREMENTS WILL BE CAUSE FOR REJECTION AND WILL BE RETURNED WITHOUT ANY FURTHER ACTION.

5. STRUCTURAL SUBMITTALS REQUIRED FOR APPROVAL INCLUDE, BUT ARE NOT LIMITED TO:

CONCRETE ACCESSORIES (MANUFACTURERS PRODUCT DATA)
STEEL REINFORCING
CONCRETE MIX DESIGN
CONTROL JOINT LAYOUT
CONCRETE MATERIAL CERTIFICATES
STRUCTURAL STEEL FRAMING
STRUCTURAL STEEL CONNECTION CALCULATIONS
STEEL ROOF DECK
COLD FORMED METAL FRAMING
COLD FORMED METAL FRAMING CALCULATIONS
MISC. STEEL FABRICATIONS

6. DELEGATED STRUCTURAL DESIGN OF COMPONENTS:

A. SEE APPLICABLE SECTIONS OF GENERAL NOTES FOR THE APPROPRIATE DESIGN RESPONSIBILITIES OF THE SUPPLIER AND IT'S LICENSED ENGINEER

P. GENERAL FRAMING NOTES:

1. FOR ALL MISCELLANEOUS STEEL SHOWN ON ARCHITECTURAL AND NOT SHOWN ON STRUCTURAL DRAWINGS, ASSUME THE FOLLOWING AS A MINIMUM AND CONFIRM FINAL ASSUMPTIONS WITH STRUCTURAL ENGINEER:
   EQUAL LEG ANGLES = L4X4X5/16
   LLV ANGLES = L6X4X5/16
   CHANNELS = C6X8.2
   SQUARE TUBE = HSS6X6X3/8
   LSV TUBE = HSS12X8X1/2
   ROUND TUBE = 6" STD PIPE
   WIDE FLANGE = W14X22
   STEEL PLATE = 3/8" THICK

5. STRUCTURAL STEEL

A. ROLLED SHAPES:

1. ALL STRUCTURAL STEEL FOR ALL THE HORIZONTAL FRAMING MEMBER SHALL CONFORM TO ASTM A992, GRADE 50, UNLESS OTHERWISE NOTED

2. ALL STRUCTURAL STEEL FOR HOLLOW STRUCTURAL SECTIONS SHALL CONFORM TO ASTM A500, GRADE B WITH A MINIMUM YIELD OF 46 KSI, UNLESS OTHERWISE NOTED.

3. ALL STRUCTURAL STEEL FOR PIPE SHALL CONFORM TO ASTM A53, TYPE E OR S, GRADE B, UNLESS OTHERWISE NOTED.

4. ALL STRUCTURAL STEEL FOR ANGLES, PLATES AND MISCELLANEOUS STEEL SHALL CONFORM TO ASTM A36, UNLESS OTHERWISE NOTED.

5. ALL EXPOSED STEEL TO BE HOT DIPPED GALVANIZED.

B. CONNECTIONS

1. THE DESIGN OF STRUCTURAL STEEL CONNECTIONS IS THE RESPONSIBILITY OF THE CONTRACTOR AND THE STEEL FABRICATOR. THE DESIGN OF THE CONNECTION SHALL BE PERFORMED BY A REGISTERED PROFESSIONAL ENGINEER EMPLOYED BY THE STEEL FABRICATOR. THE DETAILS AND CALCULATIONS SHALL INCLUDE, BUT NOT LIMITED TO, THE FOLLOWING:

A. ALL WELD SIZES AND LENGTHS
B. ALL BOLT SIZES, LOCATIONS, QUANTITIES AND GRADES
C. ALL PLATE AND ANGLE SIZES, THICKNESS AND DIMENSIONS
D. ALL WORK POINT LOCATIONS AND RELATED INFORMATION

2. PROVIDE STANDARD BOLTED CONNECTIONS CONFORMING TO AISC BOLTED CONNECTIONS, USING ASTM A325 OR A490 BOLTS, FOR THE BEAM END SHEARS INDICATED IN THE DOCUMENTS. PROVIDE MINIMUM OF TWO BOLTS FOR ALL CONNECTIONS.

3. ALL WELDED CONNECTIONS SHALL CONFORM TO AWS UNLESS OTHERWISE NOTED.

4. SURVEY ALL PLANS, DETAILS, SECTIONS, SCHEDULES AND SPECIFICATIONS FOR SPECIAL CONNECTIONS.

5. UNLESS OTHERWISE NOTED AND/OR SPECIFIED, ALL BEAM CONNECTIONS SHALL BE DESIGNED TO SUPPORT 1/2 THE TOTAL UNIFORM LOAD FOR THE APPLICABLE MEMBER SIZE AND SPAN AS DETERMINED BY THE TABLES FOR ALLOWABLE UNIFORM LOADS ON BEAM IN THE **14TH** EDITION OF THE AMERICAN INSTITUTE OF STEEL CONSTRUCTION MANUAL OF STEEL CONSTRUCTION (ASD)

6. WHERE BEAMS ARE TO RECEIVE HEADED SHEAR CONNECTORS, DESIGN THOSE BEAM CONNECTIONS FOR THE REACTION SHOWN. IF REACTIONS ARE NOT SHOWN, DESIGN THE CONNECTIONS TO SUPPORT 40 PERCENT OF THE MAXIMUM WEB SHEAR, V, FOR THE APPLICABLE MEMBER SIZE AS DETERMINED BY THE TABLES FOR ALLOWABLE UNIFORM LOADS ON BEAMS IN THE **14TH** EDITION OF THE AISC MANUAL

7. MOMENT CONNECTIONS SHOWN SHALL BE DESIGNED TO FULLY DEVELOP THE SECTION IN FLEXURE AND TO SUPPORT 1/2 THE TOTAL UNIFORM LOAD FOR SHEAR AS DESCRIBED IN NOTE 5 ABOVE.

8. WHERE FILLET WELD IS NOT SHOWN ON DETAIL, ITS SIZE SHALL BE ASSUMED TO BE THE PLATE THICKNESS OF THE THINNEST PIECE MINUS 1/16"

C. WELDS

1. CONFORM TO "CODE FOR WELDING IN BUILDING CONSTRUCTION" BY THE AMERICAN WELDING SOCIETY, LATEST EDITION.

2. WELDS ON INDICATED ON DRAWINGS ARE TO BE FILLET ALL AROUND AS PRESCRIBED BY AISC SPECIFICATION, PROVIDE WELDING OF CONTINUOUS MEMBERS OF 2 INCHES OF 3/16" INCH FILLET STITCH WELDS AT 12 INCHES OC, STAGGERED EACH SIDE, UNLESS OTHERWISE NOTED.

3. FIELD PAINT ALL WELDS W/ "GALVILITE" BY Z.R.C. OR APPROVED EQUAL ARC WELDING ELECTRODES.

4. METAL DECK - E60XX
STRUCTURAL STUDS - E6022 OR E6011, 3/32" RODS.
ALL OTHER - E70XX LOW HYDROGEN, 250 DEGREE MIN. OVEN TEMP.

5. SIZE - ALL FILLETS ARE 1/16" LESS THAN MINIMUM THICKNESS TO BE WELDED

6. PROVIDE ULTRASONIC INSPECTION BY THE TESTING LABORATORY FOR ALL WELDS INDICATED AS PENETRATION WELDS.

D. HEADED SHEAR CONNECTORS

1. ALL HEADED SHEAR CONNECTORS SHALL BE 3/4 IN. DIAMETER STUDS x 4 1/2 IN. LONG AFTER WELDING AND SHALL CONFORM TO ASTM A108 UNLESS OTHERWISE NOTED.

2. PLACE MAXIMUM NUMBER OF STUDS IN A SINGLE ROW PATTERN AND THE BALANCE IN A DOUBLE ROW PATTERN AS NECESSARY TO SATISFY THE AISC SPACING REQUIREMENT.

E. OPEN WEB STEEL JOISTS:

1. AS APPLICABLE FOR THE OPEN WEB STEEL JOIST TYPE INDICATED ON THE DRAWINGS, CONFORMING TO SJI OR AISC, WHICHEVER IS MORE STRINGENT.

2. PROVIDE JOIST BRIDGING IN ACCORDANCE WITH SJI.

3. DESIGN ROOF JOISTS USING GOVERNING LOAD COMBINATIONS WITH UPLIFT PRESSURES INDICATED ON COMPONENT AND CLADDING PRESSURES TABLE.

F. STEEL DECK:

TYPE 1

1. PROVIDE COMPOSITE STEEL DECK 2" DEEP FORMED FROM 18 GAUGE STEEL SHEETS AND CONFORMING TO ASTM A653, STRUCTURAL STEEL (SS), GRADE 33, GALVANIZED WITH COATING DESIGNATION G60.

2. PROVIDE COMPOSITE STEEL DECK WITH THE FOLLOWING MINIMUM SECTION PROPERTIES:

a. MOMENT OF INERTIA: I=0.559 INCHES ^{4}/FOOT WIDTH
b. SECTION MODULUS: Sp=0.495 INCHES ^{3}/FOOT WIDTH
c. SECTION MODULUS: Sn=0.504 INCHES ^{3}/FOOT WIDTH

3. ATTACH COMPOSITE STEEL DECK TO STEELS SUPPORTS WITH 5/8" DIA. PUDDLE WELDS AND SHEAR CONNECTORS, 36/4 PATTERN. REFER TO PLANS FOR NUMBERS AND ARRANGEMENT OF SHEAR CONNECTORS. ATTACH SIDE LAPS WITH #10 SCREWS @ 18" OC.

4. REINFORCE 3 1/2" CONCRETE OVER DECK W/ 4x4 - W4.0 x W4.0. TOTAL THICKNESS = 5 1/2".

TYPE 2

1. PROVIDE STEEL ROOF DECK 1 1/2" DEEP TYPE B 20 GAUGE STEEL SHEETS AND CONFORMING TO ASTM A653, STRUCTURAL STEEL (SS), GRADE 33, GALVANIZED COATING DESIGNATION G60.

2. PROVIDE STEEL ROOF DECK WITH THE FOLLOWING MINIMUM SECTION PROPERTIES:

a. MOMENT OF INERTIA: I =0.201 INCHES^4 /FOOT WIDTH
b. SECTION MODULUS: Sp =0.234 INCHES^3 /FOOT WIDTH
c. SECTION MODULUS: Sn =0.247 INCHES^3 /FOOT WIDTH

3. ATTACH STEEL ROOF DECK TO STEEL SUPPORTS AND AT SIDE LAPS AS FOLLOWS:

a. POWDER-ACTUATED FASTENERS:

SUPPORTS: "HILTI" X-HSN24 AND "HILTI" X-ENP-19L15, 36/7 PATTERN
SIDELAP: #12 "TEK" @ 12" O.C. MAXIMUM

b. SCREWS:

SUPPORTS: #12 "TEK" SCREWS, 36/7 PATTERN
SIDELAP: #12 "TEK" @ 12" O.C. MAXIMUM

F. STAIR NOTES:

1. ALL STEEL PAN STAIRS SHALL BE DESIGNED, MANUFACTURED, AND INSTALLED BY THE STRUCTURAL STEEL CONTRACTOR. THE STAIR MANUFACTURER SHALL BE RESPONSIBLE FOR THE COMPLETE INSTALLATION OF THEIR PRODUCT, INCLUDING ALL ACCESSORIES AND CONNECTIONS. STAIRS SHALL BE DESIGNED FOR ALL LOADING CONDITIONS REQUIRED BY THE GOVERNING BUILDING CODES IN ADDITION TO ANY SPECIFIC LOADINGS SHOWN ON THE DRAWINGS. THE DESIGN, MANUFACTURE AND INSTALLATION OF ALL STEEL PAN STAIRS SHALL BE IN ACCORDANCE WITH THE SPECIFICATIONS OF THE AMERICAN INSTITUTE OF STEEL CONSTRUCTION, LATEST EDITION.

2. STAIR DESIGN CALCULATIONS, PREPARED AND SEALED BY A LICENSED STRUCTURAL ENGINEER SHALL BE SUBMITTED FOR REVIEW ALONG WITH THE NECESSARY SHOP DRAWINGS. SUBMITTALS WILL BE REVIEWED FOR INFLUENCE AND/OR LOAD APPLICATION TO THE SUPPORTING STRUCTURE, ONLY.

3. ALL STRUCTURAL STEEL PERMANENTLY EXPOSED TO THE ELEMENTS SHALL RECEIVE ONE COAT OF APPROVED SHOP PAINT, IN ADDITION TO FIELD PAINT AS SPECIFIED IN THE ARCHITECTURAL SPECIFICATIONS.

6. CONCRETE

A. CONCRETE SCHEDULE:

BUILDING COMPONENT	28 DAY CYLINDER COMPRESSIVE STRENGTH POUNDS PER SQUARE INCH(PSI)					
	NORMAL WEIGHT			MAX AGGREGATE SIZE (IN)	SLUMP (IN)	W/C RATIO
	3000	3500	4000			
1. SPREAD FOOTING	●			1 1/2"	5-7	0.55
2. SLAB-ON-GRADE		●		1"	4-6	0.50
3. SLAB-ON-DECK		●		1"	4-6	0.50
4. GRADE BEAMS AND PLINTHS		●		1"	4-6	0.50
5. ALL OTHER CONCRETE	●			1"	4-6	0.52

B. PROVIDE DEFORMED NEW BILLET STEEL BARS CONFORMING TO ASTM A615, GRADE 60. ALL REINFORCING STEEL SHALL BE SECURELY HELD IN PLACE; PROVIDE ADDITIONAL BARS OR STIRRUPS FOR SUPPORT AS REQUIRED.

C. WELDED WIRE FABRIC SHALL CONSIST OF FLAT SHEETS AND SHALL CONFORM TO ASTM A185, WITH A MINIMUM YIELD STRENGTH OF 65.0 KSI

D. PROVIDE FULL EMBEDMENT WITH STANDARD 90 DEGREE HOOKS FOR ALL DOWELS. IF NOT OTHERWISE SPECIFIED, THE DOWEL SIZE AND SPACING SHALL BE THE SAME AS THE MAIN REINFORCING.

E. WHEN REINFORCING STEEL IN GRADE BEAMS, WALLS, SLABS AND BEAMS, IS NOTED AS CONTINUOUS, SPLICE REINFORCING STEEL ONLY WHEN UNAVOIDABLE DUE TO STOCK LENGTHS. STAGGER ALL SPLICES A MINIMUM OF 4'-0". ADJACENT BAR SPLICES ARE NOT ACCEPTABLE.
LOCATE THE TOP BAR SPLICES WITHIN THE MIDDLE HALF OF THE SPAN AND LOCATE THE BOTTOM BAR SPLICES AT SUPPORTS OR BETWEEN SUPPORTS AND 1/3 SPAN POINT, UNLESS NOTED OTHERWISE ON PLANS, DETAILS OR SCHEDULES.

F. PROVIDE INTERIOR AND EXTERIOR HORIZONTAL LAPPED CORNER BARS AT ALL CORNERS TO MATCH THE SIZE, TYPE AND SPACING OF THE WALL AND GRADE BEAM HORIZONTAL REINFORCING.

G. UNLESS SPECIFICALLY NOTED, SCHEDULED OR DETAILED OTHERWISE, PROVIDE DEVELOPMENT LENGTH FOR REINFORCING IN CONCRETE COMPONENTS IN ACCORDANCE WITH THE SCHEDULE IN NOTE H. BELOW. THIS SCHEDULE SHALL APPLY TO ALL DEVELOPMENT LENGTHS NOT OTHERWISE NOTED, DETAILED OR SCHEDULED IN THE DRAWINGS OR SPECIFICATIONS.

H. REINFORCING BAR DEVELOPMENT LENGTHS (Ld) IN INCHES FOR VARIOUS CONCRETE STRENGTHS IN POUNDS PER SQUARE INCH (PSI). TOP BARS ARE DEFINED AS HORIZONTAL REINFORCING SO PLACED IN A MEMBER THAT MORE THAN 12 INCHES OF CONCRETE IS CAST BELOW THE BAR. ALL OTHER CONDITIONS ARE CONSIDERED BOTTOM BARS FOR DEVELOPMENT AND SPLICE LENGTH PURPOSES.

BAR SIZE GRADE 60	Ld FOR TOP BARS 28 DAY CYLINDER CONCRETE STRENGTH (PSI)				Ld FOR BOTTOM BARS 28 DAY CYLINDER CONCRETE STRENGTH (PSI)			
	3000/3500	4000	5000	6000	3000/3500	4000	5000	6000
#3	22	19	17	16	17	15	13	12
#4	29	25	23	21	22	19	17	16
#5	36	31	28	26	28	24	22	20
#6	43	37	34	31	33	29	26	24
#7	63	54	49	45	48	42	38	34
#8	72	62	56	51	55	48	43	39
#9	81	70	62	57	62	54	48	44
#10	89	78	69	63	69	60	53	49
#11	98	85	76	70	76	66	59	54

1. WHEN TWO BARS OF DIFFERENT SIZES ARE LAPPED, THE SMALLER SIZE SHALL GOVERN THE LAP LENGTH UNLESS SPECIFICALLY NOTED.

2. WELDED OR MECHANICAL SPLICES CAPABLE OF DEVELOPING 125% OF THE BAR YIELD STRENGTH MAY BE USED IN LIEU OF THE LAPS. SUCH SPLICES MAY BE EITHER FULL BUTT WELDS OR SERIES "C CADWELDS OR EQUAL."

J. AT LAP SPLICES, PROVIDE LAP SPLICE LENGTHS FOR REINFORCING BARS 1.3 TIMES THE Ld SHOWN IN TABLE IN NOTE H ABOVE.

K. THE GENERAL NOTES, LAP LENGTHS OR DETAILS PERTAINING TO REINFORCING STEEL AS SHOWN ON THE DETAIL SHEETS OR OTHER SCHEDULES SHALL SUPERSEDE THE NOTES SHOWN ON THIS SHEET.

L. PROVIDE THE FOLLOWING COVER FOR CAST-IN-PLACE CONCRETE REINFORCING.

1. UNFORMED SURFACES IN CONTACT WITH EARTH: 3 INCHES

2. UNFORMED SURFACES OVER MOISTURE BARRIER: 2 INCHES

3. FORMED SURFACES EXPOSED TO EARTH OR WEATHER

a. #6 AND LARGER: 2 INCHES
b. #5 AND SMALLER: 1 1/2" INCHES

4. FORMED SURFACES NOT EXPOSED TO EARTH OR WEATHER
a. SLABS AND WALLS: 3/4 INCHES
b. BEAMS AND COLUMNS 1 1/2 INCHES

7. EXCAVATION, BACKFILLING & FOUNDATIONS

A. A GEOTECHNICAL EXPLORATION OF SUBSURFACE CONDITIONS, CONTAINING TEST BORINGS, LABORATORY TEST, ENGINEERING ANALYSIS AND FOUNDATION RECOMMENDATIONS, PERFORMED BY **ALPHA TESTING, LLC** DATED **AUGUST 15, 2023**, PROPOSAL NO. **99528** IS AVAILABLE FOR REVIEW.

B. MAINTAIN PROPER SITE DRAINAGE DURING CONSTRUCTION SO THAT PONDING OF WATER DOES NOT OCCUR IN THE BUILDING AREA.

C. SUB-GRADE PREPARATION .

1. PERFORM DEMOLITION OF EXISTING STRUCTURES AS REQUIRED BY THE GEOTECHNICAL REPORT. THE ENTIRE VOLUME OF THE EXCAVATIONS CREATED BY DEMOLITION AND REMOVAL OF EXISTING STRUCTURES SHOULD BE BACKFILLED WITH ENGINEERED (SELECT) FILL THAT IS PROPERLY PLACED AND COMPACTED.

2. EXCAVATE EXISTING SOILS AS REQUIRED TO REMOVE ALL EXISTING VEGETATION, ROOTS AND DELETERIOUS MATERIALS FROM THE PROPOSED BUILDING AREA, AND AS REQUIRED BY GEOTECHNICAL REPORT. THE CLEARING SHOULD EXTEND BEYOND THE BUILDING EDGES. ONCE ROUGH GRADE IS ESTABLISHED, THE EXPOSED SURFACE SHOULD BE PROOF-ROLLED. ANY SOFT POCKETS OF SOFT OR WEAK SOILS ENCOUNTERED SHOULD BE REMOVED. BUILD BUILDING PAD AS REQUIRED BY GEOTECHNICAL REPORT.

3. BUILDING PAD UNDER SLAB ON GRADE SHALL BE PREPARED TO PROVIDE AN OWNER APPROVED PVR OF 1" OR LESS BASED ON RECOMMENDATIONS IN THE PROJECT GEOTECHNICAL REPORT.

D. FOUNDATIONS HAVE BEEN DESIGNED FOR ALLOWABLE PRESSURE OF **DRILLED / FOOTING SCHEDULE SHEET**.

E. REFER TO THE GEOTECHNICAL EXPLORATION FOR ADDITIONAL INFORMATION.

FSGROUP ARCHITECTS
16575 Village Drive
Houston Texas 77040
713 344 1752 PH
fsdesignbuild.com

PROJECT NAME

THE STATE OF TEXAS · FORT BEND COUNTY

INFORMATION TECHNOLOGY BUILDING
EUGENE HEIMANN CIRCLE
FORT BEND COUNTY . RICHMOND . TEXAS

CONSULTANTS

Dally + ASSOCIATES
STRUCTURAL | CIVIL
9800 Richmond Avenue, Suite 460
Houston, Texas 77042
1 713 337 8881
Texas Registered Engineering Firm F-003426

PROFESSIONAL SEAL

STATE OF TEXAS · FRED DALLY · 90904 · LICENSED PROFESSIONAL ENGINEER
05/15/2024

ISSUED FOR

ISSUED FOR PROPOSALS & PERMIT

REVISIONS

No.	DESCRIPTION	DATE

KEY PLAN

TRUE · NORTH

SHEET TITLE

GENERAL STRUCTURAL CRITERIA

SCALE 1/8" = 1'-0"

DATE 05/15/24

PROJECT NUMBER 2319

SHEET NUMBER

S101

8. INDEPENDENT TESTING LABORATORY & SPECIAL INSPECTIONS

A. A GEOTECHNICAL EXPLORATION OF SUBSURFACE CONDITIONS, CONTAINING TEST BORINGS, LABORATORY TEST, ENGINEERING ANALYSIS AND FOUNDATION RECOMMENDATIONS, PERFORMED BY **ALPHA TESTING, LLC** DATED **AUGUST 15, 2023** , PROPOSAL NO. **99528** IS AVAILABLE FOR REVIEW.

B. EMPLOYMENT OF A TESTING LABORATORY IN NO WAY RELIEVES THE CONTRACTOR OF ANY OBLIGATION TO PERFORM WORK IN ACCORDANCE WITH THE CONTRACT DOCUMENTS.

C. CONTRACTOR RESPONSIBILITIES:

1. DELIVER TO LABORATORY AT DESIGNATED LOCATION ADEQUATE SAMPLES OF MATERIALS PROPOSED TO BE USED WHICH REQUIRE TESTING, TOGETHER WITH PROPOSED MIX DESIGNS.
2. COOPERATE WITH LABORATORY PERSONNEL AND PROVIDE ACCESS TO WORK AND TO MANUFACTURER'S FACILITIES.
3. PROVIDE INCIDENTAL LABOR AND FACILITIES TO PROVIDE ACCESS TO WORK TO BE TESTED, TO OBTAIN AND HANDLE SAMPLES AT THE SITE OR AT SOURCE OF PRODUCTS TO BE TESTED, TO FACILITATE TEST AND INSPECTIONS AND FOR STORAGE AND CURING OF TEST SAMPLES.
4. NOTIFY LABORATORY OF MATERIAL SOURCES AND FURNISH NECESSARY QUANTITIES OF REPRESENTATIVE SAMPLES OF MATERIALS PROPOSED FOR USE WHICH ARE REQUIRED TO BE TESTED.
5. NOTIFY ARCHITECT AND LABORATORY 24 HOURS PRIOR TO EXPECTED TIME FOR OPERATIONS REQUIRING INSPECTION AND TESTING SERVICES.
6. ADVISE LABORATORY IN A TIMELY FASHION TO COMPLETE REQUIRED INSPECTION AND TESTING PRIOR TO SUBSEQUENT WORK BEING PERFORMED.
7. PAY FOR ALL SUBSEQUENT RE-TESTING OF PRODUCTS OR SYSTEMS FOUND TO BE DEFECTIVE OR OTHERWISE NOT IN ACCORDANCE WITH SPECIFICATION REQUIREMENTS. REMOVE REJECTED PRODUCTS AND REPLACE WITH PRODUCTS OF SPECIFIED QUALITY.

D. SPECIAL INSTRUCTIONS:

1. THE OWNER SHALL EMPLOY ONE OR MORE SPECIAL INSPECTOR(S) TO PROVIDE INSPECTIONS DURING CONSTRUCTION ON THE TYPES OF CONSTRUCTION LISTED IN THIS SECTIONS. THE SPECIAL INSPECTOR SHALL BE A QUALIFIED PERSON WHO SHALL DEMONSTRATE COMPETENCE TO THE INSPECTIONS BEING PERFORMED TO THE SATISFACTION OF THE ENGINEER OF RECORD AND THE BUILDING OFFICIAL. THE SPECIAL INSPECTOR SHALL HAVE EXPERIENCE WITH AT LEAST FIVE OTHER PROJECTS SIMILAR IN NATURE.
2. THE PURPOSE OF THE INSPECTIONS SHALL BE TO ENFORCE COMPLIANCE WITH THE CONSTRUCTION DRAWINGS, SPECIFICATIONS, GEOTECHNICAL REPORT AND THE **2018** INTERNATIONAL BUILDING CODE, SECTION 1704.
3. THE FOLLOWING ITEMS REQUIRE INSPECTION BY THE SPECIAL INSPECTOR:

REFERENCED STANDARD	FREQUENCY
STRUCTURAL / REINFORCING STEEL:	
HIGH STRENGTH BOLTING	
BEARING TYPE CONNECTIONS	PERIODIC
SLIP CRITICAL CONNECTIONS	CONTINUOUS
WELDING OF STRUCTURAL STEEL	
FULL PENETRATION GROOVE WELDS	CONTINUOUS
MULTI-PASS FILLET WELDS	CONTINUOUS
SINGLE-PASS FILLET WELDS > 5/16"	CONTINUOUS
SINGLE-PASS FILLET WELDS <=5/16"	PERIODIC
FLOOR AND DECK WELDS	PERIODIC
WELDING OF REINFORCING STEEL	
WELDABILITY OF STEEL, OTHER THE ASTM A706	PERIODIC
SHEAR REINFORCEMENT	CONTINUOUS
OTHER REINFORCEMENT	PERIODIC
INSPECTION OF STEEL FRAME AND JOISTS	
DETAILS SUCH AS BRACING AND STIFFENING	PERIODIC
MEMBERS SIZES AND LOCATION	PERIODIC
APPLICATION OF CONNECTION DETAIL	PERIODIC
CONCRETE CONSTRUCTION	
REINFORCING STEEL	PERIODIC RANDOMLY @ 20%
CONCRETE MIX DESIGN	PERIODIC EACH CONCRETE POUR
SAMPLING OF FRESH CONCRETE	CONTINUOUS (SEE NOTE 1)
MAINTENANCE OF SPECIFIED CURING TEMPS AND TECHNIQUES	PERIODIC EACH POUR
INSPECTION OF CONCRETE PLACEMENT FOR PROPER APPLICATION TECHNIQUES	CONTINUOUS
INSPECTION OF MAINTENANCE OF SPECIFIED CURING TEMPERATURE AND TECHNIQUES	PERIODIC
DRILLED & EPOXIED ANCHORS	EACH APPLICATION (SEE NOTE 2)
INSPECT FORMWORK FOR SHAPE, LOCATION AND DIMENSIONS	PERIODIC
SOILS (SLAB-ON-GRADE):	
VISUAL OBSERVATIONS	PERIODIC
PROOF ROLLING OBSERVATION	CONTINUOUS
MOISTURE CONDITIONING & RECOMPACTION	CONTINUOUS OR PERIODIC, 1 DENSITY TEST FOR EACH 2,000 SF
DURING FILL PLACEMENT	CONTINUOUS OR PERIODIC
EVALUATION OF IN PLACE DENSITY FILL	CONTINUOUS OR PERIODIC
PIERS:	
OBSERVE DRILLING OPERATIONS AND COMPLETE RECORD OF DRILLING	CONTINUOUS
VERIFY PLACEMENTS LOCATIONS AND PLUMBNESS, LENGTH, EMBEDMENT AND ADEQUATE BEARING STRENGTH CAPACITY CONFIRM PIER DIAMETER, REINFORCING STEEL - RE CONCRETE ABOVE	CONTINUOUS
FOOTINGS:	
OBSERVE EXCAVATION OPERATIONS AND COMPLETE RECORD OF EXCAVATION	CONTINUOUS
VERIFY PLACEMENTS LOCATIONS AND PLUMBNESS, LENGTH, EMBEDMENT AND ADEQUATE BEARING STRENGTH CAPACITY CONFIRM FOOTING DIMENSIONS, REINFORCING STEEL - RE CONCRETE ABOVE	CONTINUOUS

NOTES:

1. PROVIDE A SET OF 4 FOR EVERY 75 CY OF BUT NOT LESS THAN 1 / 5,000 SF OF SLAB OR WALL SURFACE AREA. MONITOR SLUMP AND AIR CONTENT OF CONC. AND NOTIFY DELIVERY DRIVER IF SLUMP DEVIATES MORE THAN 1" FROM SPEC'D VALUE.
2. ALL DRILLED AND EPOXIED ANCHORS (REBAR, BOLTS, THREADED RODS ETC.) SHALL BE PULL TESTED TO 110% FOR NO LESS THAN 3 MIN.
3. ADDITIONAL TESTS AT THE CONTRACTOR'S EXPENSE WILL BE PERFORMED TO DETERMINE COMPLIANCE OF REPLACED OR ADDITIONAL WORK WITH SPECIFIED REQUIREMENTS.
4. CORRECT DEFICIENCIES IN WORK THAT TEST REPORTS AND INSPECTIONS INDICATE DO NOT COMPLY WITH THE CONTRACT DOCUMENTS.
5. PROVIDE THE ENGINEER OF RECORD (EOR) COPIES OF ALL SPECIAL INSPECTIONS SO A SPECIAL INSPECTIONS REPORT CAN BE PREPARED FOR OBTAINING A CERTIFICATE OF OCCUPANCY.

9. COLD-FORMED METAL FRAMING:

A. PROVIDE COLD-FORMED METAL FRAMING, INCLUDING TRUSSES, STUDS, JOIST, TRACK, RUNNERS, LINTELS, CLIP ANGLES, REINFORCEMENTS, SHOES, BLOCKING, AND BRIDGING, COMPLETE WITH ALL FASTENERS, AND ACCESSORIES NEEDED FOR A COMPLETE AND FINISHED INSTALLATION.

B. THE STRUCTURAL DRAWINGS INDICATE THE GENERAL CONFIGURATION OF FRAMING FOR TYPICAL CONDITIONS ONLY. FINAL CONFIGURATION OF DETAILS AS WELL AS ALL SUPPLEMENTARY FRAMING TO OBTAIN THE ROOF PROFILES SHOWN ON THE PLANS SHALL BE AS DETERMINED BY DESIGN.

C. COLD-FORMED METAL FRAMING SHALL BE DESIGNED IN ACCORDANCE WITH AMERICAN IRON AND STEEL INSTITUTE (AISI) PUBLICATION: "SPECIFICATION FOR DESIGN OF COLD-FORMED STEEL STRUCTURAL MEMBERS", LATEST EDITION. PROVIDE STEEL FOR RAFTERS. JOISTS, STUDS AND ACCESSORIES CONFORMING TO ASTM A1003, GRADE 50, STRUCTURAL QUALITY STEEL SHEET FORMED TO 'C' SHAPES, UNPUNCHED WITH STIFFENED FLANGES.

D. ALL STRUCTURAL MEMBERS SHALL BE FORMED FROM CORROSION-RESISTANT STEEL, CORRESPONDING TO THE REQUIREMENTS OF ASTM A446, GRADE C, WITH A MINIMUM YIELD STRENGTH OF 50 KSI FOR STUDS AND JOISTS AND GRADE A, 33KSI, FOR RUNNERS. ALL STRUCTURAL MEMBERS SHALL BE ZINC COATED MEETING ASTM A525, G-60, OR EQUIVALENT. TYPICAL.

E. FASTENING OF COMPONENTS SHALL BE WITH SELF-DRILLING SCREWS OR BY WELDING. SCREWS AND WELDS SHALL BE OF SUFFICIENT SIZE TO ENSURE THE STRENGTH OF THE CONNECTION. ALL WELDS SHALL BE TOUCHED-UP WITH A ZINC-RICH PAINT.

F. SUBMIT SHOP DRAWINGS FOR ALL FRAMING PREPARED UNDER THE SUPERVISION OF A REGISTERED PROFESSIONAL ENGINEER, AND CALCULATIONS, SIGNED AND SEALED BY SAID ENGINEER, FOR REVIEW PRIOR TO ERECTION OF ANY COLD-FORMED METAL FRAMING.

SHOP DRAWINGS SUBMITTED FOR REVIEW SHALL CONTAIN THE FOLLOWING FOR EACH:

- **A.** COMPLETE ERECTION DRAWINGS SHOWING LOCATION AND SPACING OF ALL FRAMING MEMBERS.
- **B.** SIZE AND GAGE OF ALL FRAMING MEMBERS.
- **C.** DETAIL DRAWINGS OF ALL PREFABRICATED ASSEMBLIES.
- **D.** LOADING CONDITIONS USED IN DESIGN.
- **E.** CALCULATED FORCES FOR ALL MEMBERS.
- **F.** ANCHORAGE DETAILS, CONNECTION DETAILS, SLICE DETAILS, TEMPORARY AND PERMANENT BRACING.

G. TEMPORARY BRACING, WHERE REQUIRED, SHALL BE PROVIDED UNTIL ERECTION IS COMPLETE.

H. THE INFORMATION PROVIDED SHALL TAKE INTO ACCOUNT AND SHOW ALL SPECIAL DESIGN, FRAMING AND CONNECTION REQUIREMENTS SUCH AS AT CONCENTRATED LOADS, UNBALANCED OR UNSYMMETRICAL LOAD CONDITIONS, AND OTHER NON-TYPICAL FRAMING DETAILS.

I. SPLICES IN FRAMING COMPONENTS, OTHER THAN RUNNER TRACK, SHALL NOT BE PERMITTED.

J. BLOCKING SHALL BE PROVIDED AT SUPPORTS WHERE JOISTS ARE NOT OTHERWISE RESTRAINED FROM ROTATION.

K. ABUTTING LENGTHS OF RUNNER TRACK SHALL BE BUTT-WELDED, SPLICED OR EACH LENGTH SECURELY ANCHORED TO A COMMON STRUCTURAL ELEMENT. RUNNER TRACK SHALL BE SECURELY ANCHORED TO THE SUPPORTING STRUCTURE.

L. PROVIDE MEMBERS WITH THE FOLLOWING MINIMUM SECTION PROPERTIES:

SECTION	MINIMUM THICKNESS	Ix (MOMENT OF INERTIA	Sx (SECTION MODULUS)	FY (YIELD STRENGTH)
6" TYPICAL JOISTS, RAFTERS	0.056 INCHES	2.83 INCHES ^{4}	0.95 INCHES ^{3}	50 KSI
6" EXTERIOR STUDS	0.056 INCHES	2.31 INCHES ^{4}	0.95 INCHES ^{3}	50 KSI
3 5/8" INTERIOR STUDS	0.045 INCHES	0.71 INCHES ^{4}	0.39 INCHES ^{3}	33 KSI
RUNNER TRACK	0.045 INCHES	2.49 INCHES ^{4}	0.81 INCHES ^{3}	33 KSI

M. MEMBER PERFORMANCE:

1. RAFTERS AND HEADERS: VERTICAL DEFLECTION IS LIMITED TO 1/240 OF THE SPAN.
2. STUDS: HORIZONTAL DEFLECTION IS LIMITED TO 1/240 OF THE SPAN (TYPICAL); FOR BRICK VENEER 1/600 OF THE SPAN.

11. LOOSE VENEER LINTEL SCHEDULE

MASONRY OPENING	SIZE	DETAIL
LESS THAN 4'-0"	L 3 1/2 x 3 1/2 x 1/4	L
4'-0" BUT LESS THAN 5'-0"	L 4 x 4 x 1/4	L
5'-0" BUT LESS THAN 6'-0"	L 5 x 3 1/2 x 1/4 LLV	L
6'-0" BUT LESS THAN 7'-0"	L 6 x 3 1/2 x 5/16 LLV	L
7'-0" BUT LESS THAN 8'-6"	L 6 x 4 x 5/16 LLV	L

NOTE:
PROVIDE 8" MINIMUM BEARING EACH END FOR STEEL LOOSE LINTELS. ONE ANGLE SHALL BE PROVIDED FOR EACH WYTHE OF BRICK. SEE ARCHITECTURAL DRAWINGS FOR LOCATIONS. HOT DIP GALVANIZE ALL LINTELS AFTER FABRICATION.

FSGROUP ARCHITECTS
16575 Village Drive
Houston Texas 77040
713 344 1752 PH
fsdesignbuild.com

PROJECT NAME

THE STATE OF TEXAS · FORT BEND COUNTY

INFORMATION TECHNOLOGY BUILDING
EUGENE HEIMANN CIRCLE
FORT BEND COUNTY . RICHMOND . TEXAS

CONSULTANTS

Dally + ASSOCIATES
STRUCTURAL | CIVIL
9800 Richmond Avenue, Suite 460
Houston, Texas 77042
t 713 337 8881
Texas Registered Engineering Firm
F-003426

PROFESSIONAL SEAL

05/15/2024

ISSUED FOR

ISSUED FOR PROPOSALS & PERMIT

REVISIONS

No.	DESCRIPTION	DATE

KEY PLAN

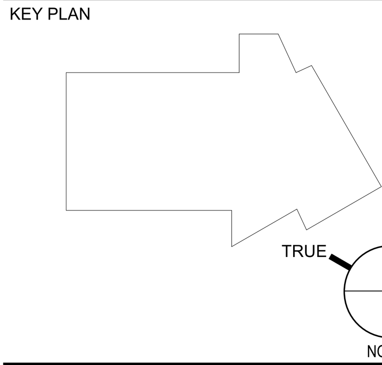

SHEET TITLE

GENERAL STRUCTURAL CRITERIA

SCALE 1/8" = 1'-0"

DATE 05/15/24

PROJECT NUMBER 2319

SHEET NUMBER

S102

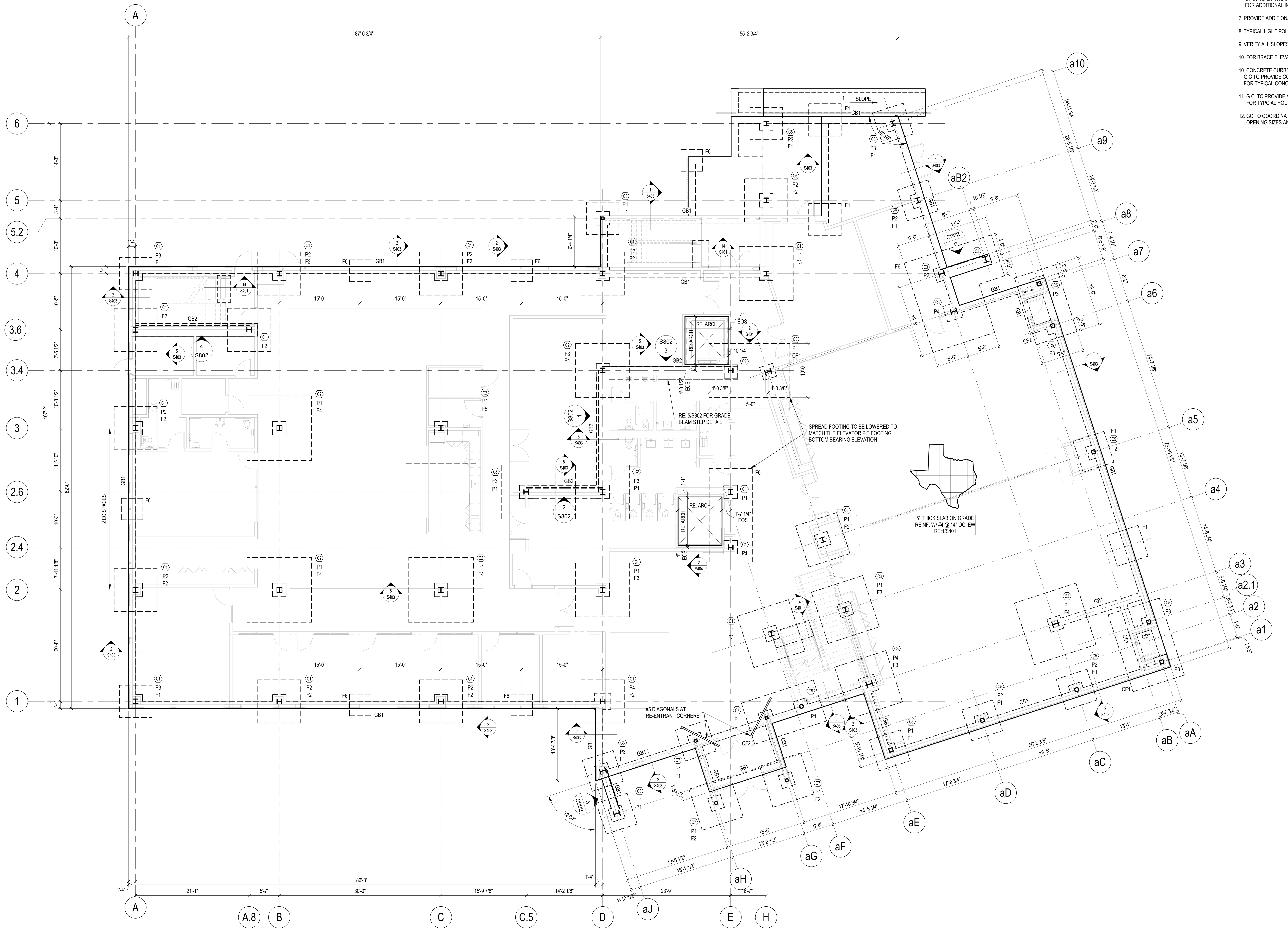

FOUNDATION PLAN LEVEL 1
1/8" = 1'-0"

FOUNDATION NOTES:

1. DATUM ELEVATION <0'-0"> CORRESPONDS TO TRUE ELEVATION = RE: CIVIL.
   ALL ELEVATIONS ARE RELATIVE TO DATUM ELEVATION <0' - 0">.

2. "F1" (EXAMPLE) INDICATES SPREAD FOOTING TYPE
   TOP OF ALL EXTERIOR FOOTINGS ARE AT ELEVATION < - 3'-0"> TYP, UON.
   TOP OF ALL INTERIOR FOOTINGS ARE AT ELEVATION < - 3'-0"> TYP, UON.
   FOR FOOTING SCHEDULE & DETAILS RE: S301.

3. "P1" (EXAMPLE) INDICATES PLINTH TYPE
   ALL INTERIOR PLINTHS ARE TYPE "P1" UON
   ALL PERIMETER PLINTHS ARE TYPE "P2" UON
   ALL CORNER PLINTHS ARE TYPE "P3" UON
   T.O. PLINTHS ARE AT < - 0'-12"> TYP, UON.
   FOR PLINTH SCHEDULE & DETAILS RE: S301.

4. "GB1" (EXAMPLE) INDICATES GRADE BEAM TYPE
   ALL GRADE BEAMS ARE AT ELEVATION <-0'-12"> TYP, UON.
   PROVIDE TYPICAL CORNER BARS AT ALL GRADE BEAM INTERSECTIONS PER 4/S401.
   FOR GRADE BEAM SCHEDULE & DETAILS RE: S301.

5. " HSS6X6X3/8 C1 " (EXAMPLE) INDICATES COLUMN SIZE

   "[BP1]" (EXAMPLE) INDICATES BASE PLATE TYPE
   FOR COLUMN, BASE PLATE & ANCHOR BOLT SCHEDULE RE: S302
   PROVIDE TYPICAL BLOCKOUTS AT EACH COLUMN PER DETAILS 6, 7, 8 & 9/S401, TYP UON.

6. PROVIDE CONTROL JOINTS AT EVERY COLUMN LINE AND AT A MAXIMUM SPACING
   OF 36 TIMES THE SLAB THICKNESS (NOT TO EXCEED 15'-0"), TYPICAL UON.
   FOR ADDITIONAL INFORMATION RE: 3/S401.

7. PROVIDE ADDITIONAL REINFORCING AT ALL RE-ENTRANT CORNERS PER 5/S401.

8. TYPICAL LIGHT POLE FOUNDATION DETAIL RE: 1/S402.

9. VERIFY ALL SLOPES, DEPRESSIONS, ELEVATIONS WITH ARCH. PRIOR TO CONSTRUCTION

10. FOR BRACE ELEVATIONS AND DETAILS RE: S800'S.

10. CONCRETE CURBS NOT SHOWN FOR CLARITY.
   G.C TO PROVIDE CONCRETE CURB AS DESIGNATED IN ARCHITECTURAL DRAWINGS.
   FOR TYPICAL CONCRETE CURB DETAIL RE: 5/S401.

11. G.C. TO PROVIDE A HOUSEKEEPING PAD UNDER ALL MECHANICAL UNITS.
   FOR TYPCIAL HOUSEKEEPING PAD DETAIL RE: 16/S401.

12. GC TO COORDINATE WITH THE ELEVATOR SUBMITTAL TO DETERMINE THE EXACT SHAFT
   OPENING SIZES AND THE SLAB EDGE DIMENSIONS.

FSGROUP ARCHITECTS
16575 Village Drive
Houston Texas 77040
713 344 1752 PH
fsdesignbuild.com

PROJECT NAME

THE STATE OF TEXAS
FORT BEND COUNTY

INFORMATION TECHNOLOGY BUILDING
EUGENE HEIMANN CIRCLE
FORT BEND COUNTY . RICHMOND . TEXAS

CONSULTANTS

Dally + ASSOCIATES
STRUCTURAL | CIVIL
9800 Richmond Avenue, Suite 460
Houston, Texas 77042
t 713 337 8881
Texas Registered Engineering Firm
F-003426

PROFESSIONAL SEAL

STATE OF TEXAS
FRED DALLY
90904
05/15/2024

ISSUED FOR

ISSUED FOR PROPOSALS & PERMIT

REVISIONS

No.	DESCRIPTION	DATE

KEY PLAN

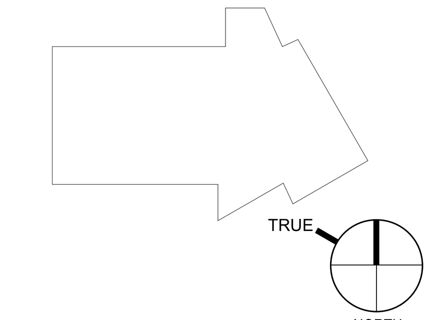

TRUE
NORTH

SHEET TITLE

FOUNDATION PLAN
LEVEL 1

SCALE
1/8" = 1'-0"

DATE
05/15/24

PROJECT NUMBER
2319

SHEET NUMBER

S110

PROVIDE AN ALLOWANCE FOR ADDITIONAL 14 TONS OF MISCELLANEOUS STEEL FOR THE ENTIRE PROJECT (SIZES AS DIRECTED BY THE ARCHITECT/ EOR) TO BE USED IN THE FIELD AS DIRECTED BY THE ARCHITECT/ EOR AND SHALL INCLUDE ALL THE ASSOCIATED DETAILING, LABOR, ERECTION, AND ANY OVERHEAD COST. ANY UNUSED PORTION OF THE QUANTITY SHALL BE CREDITED BACK TO THE OWNER AT THE SAME RATE.

COMPOSITE FLOOR DECK FRAMING NOTES:

1. ALL ELEVATIONS FLOOR ARE RELATIVE TO DATUM ELEVATION.
2. " DECK / TYPE 1 " INDICATES COMPOSITE DECK SPAN DIRECTION.
   T.O.S. ELEVATION AT COMPOSITE DECK IS 5 1/2" BELOW T.O. CONCRETE, TYP UON. FOR DECK TYPE INFORMATION RE: 7E/S102 .
3. COORDINATE LOCATIONS AND SIZES OF ALL CHASES AND PENETRATIONS WITH MEP. FOR TYPICAL FRAMING AROUND COMPOSITE DECK OPENINGS RE: 2, 3, & 4/S502.
4. FOR ELEVATOR SUPPORT DETAILS RE: 6 & 7/S502
5. FOR BRACE ELEVATIONS AND DETAILS RE: S801.
6. CONCRETE CURBS NOT SHOWN ON PLAN FOR CLAIRTY (G.C. TO PROVIDE CONCRETE CURBS WHERE DESIGNATED BY ARCH DRAWINGS) FOR TYPICAL CONCRETE CURB DETAIL AT COMPOSITE DECKS RE: 18/S502.
7. MONUMENTAL STAIRS AT THE LOBBY TO BE DESIGNED BY THE STEEL FABRICATOR WITH 1/4" (MAX) DEFLECTION. GC TO COORDINATE WITH ARCH DRAWINGS FOR THE STAIR LAYOUT.
8. ALL EXPOSED STEEL TO BE HOT DIPPED GALVANIZED.
9. 3/4" DIA. HEADED SHEAR STUDS @ 12" OC MINIMUM ON ALL BEAMS/GIRDERS AT COMPOSITE DECK.
10. SLAB ON DECK REINFORCING 4" X 4" W4 X W4 WELDED WIRE MESH.
11. PROVIDE CONTINUOUS SHEET METAL CLOSURES AT SLAB OPENINGS AND SLAB EDGES AND CONTINUOUS DECK CLOSURES AT DECK ENDS.
12. AT INTERIOR WINDOWS / STOREFRONT GREATER THAN 10'-0" LONG, PROVIDE HSS10X6X1/2 PER DETAIL 1, 8, & 9 /S502. GC TO COORDINATE ALL LOCATIONS WITH ARCH.
13. BEAMS SUBJECT TO MOMENT CONNECTIONS AND RUNNING PARALLEL TO FLOOR BEAMS, PROVIDE L3X3X1/4 KICKERS AT 5'-0" OC FROM BEAM BOTTOM FLANGES TO ADJACENT BEAM TOP FLANGES.
14. AT DECK CHANGE DIRECTION, STEEL FABRICATOR TO PROVIDE ANY NECESSARY CLOSURE PLATES.

STEEL ROOF FRAMING NOTES:

1. ALL ELEVATIONS ARE RELATIVE TO DATUM ELEVATION.
2. " DECK / TYPE 2 " (EXAMPLE) INDICATES ROOF DECK SPAN DIRECTION AND DECK TYPE 2.
   TOS ELEVATION AT ROOF DECKS ARE AT BOD, TYP, UON.
   FOR DECK TYPE INFORMATION **RE: 7 / S101**
3. COORDINATE LOCATIONS AND SIZES OF ALL CHASES AND PENETRATIONS WITH MEP. COORDINATE EXACT LOCATION OF ALL MEP UNITS WITH MEP. FOR FRAMING AROUND ROOF OPENINGS **RE: 7 / S504**
4. FOR ELEVATOR SUPPORT DETAILS **RE: 7 / S502** & **RE: 6 / S502**
5. FOR BRACE ELEVATIONS AND DETAILS **RE: S801**.

   G.C. TO COORDINATE FINAL PIPE RUN LOCATIONS WITH MEP DRAWINGS
   ALL PIPE RUNS INDICATED IN THE STRUCTURAL DRAWINGS ARE FOR REFERENCE ONLY.
   FOR ADDITIONAL INFORMATION **RE: 14 / S504** & **RE: 15 / S504**
6. AT ROOF, PROVIDE (AS REQUIRED) RIDGE AND VALLEY PLATES, COLUMN CLOSURES, CANT. STRIPS, SUMP PLATES AT PIPING PENETRATIONS AND RECESSED SUMP PANS AT ROOF DRAINS. PROVIDE SUPPLEMENTAL FRAMING AT OPENINGS AS REQUIRED FOR SUPPORT OF METAL DECK. OPENINGS SHALL BE COORDINATED WITH ARCHITECTURAL AND MECHANICAL DRAWINGS.
7. ALL EXPOSED STEEL TO BE HOT DIPPED GALVANIZED.
8. JOISTS SUPPORTING RTU UNITS TO BE KCS JOISTS MATCHING THE SAME K-JOIST SIZE OR LARGER ADJACENT TO IT.
9. AT DECK CHANGE DIRECTION, STEEL FABRICATOR TO PROVIDE ANY NECESSARY CLOSURE PLATES.
10. WHERE K-JOISTS AND LH-JOISTS BEAR ON THE SAME BEAM, K-JOIST SEAT TO MATCH LH-JOIST SEAT.
11. ROOF BEAMS ADJACENT TO CAMBERED LONG SPAN JOISTS TO BE CAMBERED TO MAINTAIN PROPER DECK BEARING, STEEL FABRICATOR TO COORDINATE WITH JOIST MANUFACTURER.
12. BEAMS SUBJECT TO MOMENT CONNECTIONS, PROVIDE L3X3X1/4 AT 6'-0" OC FROM BEAM BOTTOM FLANGES TO ADJACENT JOIST OR BEAM TOP FLANGES.
13. GC TO COORDINATE WITH THE ELEVATOR SUBMITTAL TO DETERMINE THE EXACT SHAFT OPENING SIZES AND THE SLAB EDGE DIMENSIONS.

1 FRAMING PLAN LEVEL 2
1/8" = 1'-0"

FSGROUP ARCHITECTS
16575 Village Drive
Houston Texas 77040
713 344 1752 PH
fsdesignbuild.com

PROJECT NAME

THE STATE OF TEXAS · FORT BEND COUNTY

INFORMATION TECHNOLOGY BUILDING
EUGENE HEIMANN CIRCLE
FORT BEND COUNTY . RICHMOND . TEXAS

CONSULTANTS

Dally + ASSOCIATES
STRUCTURAL | CIVIL
9800 Richmond Avenue, Suite 460
Houston, Texas 77042
t 713 337 8881
Texas Registered Engineering Firm
F-003426

PROFESSIONAL SEAL

STATE OF TEXAS
FRED DALLY
90904
05/15/2024

ISSUED FOR

ISSUED FOR PROPOSALS & PERMIT

REVISIONS

No.	DESCRIPTION	DATE

KEY PLAN

TRUE NORTH

SHEET TITLE

FRAMING PLAN LEVEL 2

SCALE 1/8" = 1'-0"

DATE 05/15/24

PROJECT NUMBER 2319

SHEET NUMBER

S111

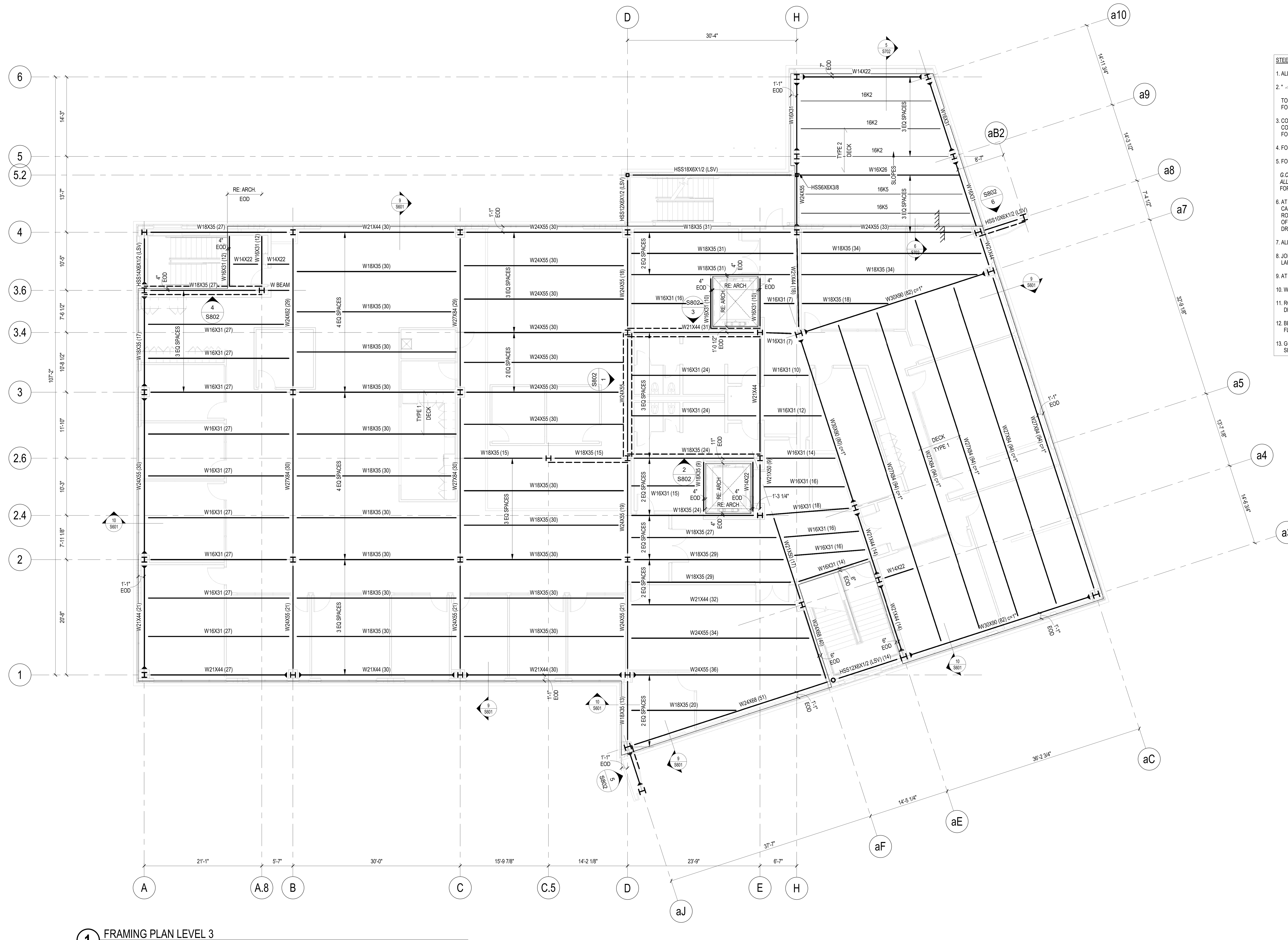

1 FRAMING PLAN LEVEL 3
1/8" = 1'-0"

COMPOSITE FLOOR DECK FRAMING NOTES:

1. ALL ELEVATIONS FLOOR ARE RELATIVE TO DATUM ELEVATION.
2. " DECK / TYPE 1 " INDICATES COMPOSITE DECK SPAN DIRECTION.
   T.O.S. ELEVATION AT COMPOSITE DECK IS 5 1/2" BELOW T.O. CONCRETE, TYP UON.
   FOR DECK TYPE INFORMATION RE: 7E/S102 .
3. COORDINATE LOCATIONS AND SIZES OF ALL CHASES AND PENETRATIONS WITH MEP. FOR TYPICAL FRAMING AROUND COMPOSITE DECK OPENINGS RE: 2, 3, & 4/S502.
4. FOR ELEVATOR SUPPORT DETAILS RE: 6 & 7/S502
5. FOR BRACE ELEVATIONS AND DETAILS RE: S801.
6. CONCRETE CURBS NOT SHOWN ON PLAN FOR CLAIRTY (G.C. TO PROVIDE CONCRETE CURBS WHERE DESIGNATED BY ARCH DRAWINGS) FOR TYPICAL CONCRETE CURB DETAIL AT COMPOSITE DECKS RE: 18/S502.
7. MONUMENTAL STAIRS AT THE LOBBY TO BE DESIGNED BY THE STEEL FABRICATOR WITH 1/4" (MAX) DEFLECTION. GC TO COORDINATE WITH ARCH DRAWINGS FOR THE STAIR LAYOUT.
8. ALL EXPOSED STEEL TO BE HOT DIPPED GALVANIZED.
9. 3/4" DIA. HEADED SHEAR STUDS @ 12" OC MINIMUM ON ALL BEAMS/GIRDERS AT COMPOSITE DECK.
10. SLAB ON DECK REINFORCING 4" X 4" W4 X W4 WELDED WIRE MESH.
11. PROVIDE CONTINUOUS SHEET METAL CLOSURES AT SLAB OPENINGS AND SLAB EDGES AND CONTINUOUS DECK CLOSURES AT DECK ENDS.
12. AT INTERIOR WINDOWS / STOREFRONT GREATER THAN 10'-0" LONG, PROVIDE HSS10X6X1/2 PER DETAIL 1, 8, & 9 /S502. GC TO COORDINATE ALL LOCATIONS WITH ARCH.
13. BEAMS SUBJECT TO MOMENT CONNECTIONS AND RUNNING PARALLEL TO FLOOR BEAMS, PROVIDE L3X3X1/4 KICKERS AT 5'-0" OC FROM BEAM BOTTOM FLANGES TO ADJACENT BEAM TOP FLANGES.
14. AT DECK CHANGE DIRECTION, STEEL FABRICATOR TO PROVIDE ANY NECESSARY CLOSURE PLATES.

STEEL ROOF FRAMING NOTES:

1. ALL ELEVATIONS ARE RELATIVE TO DATUM ELEVATION.
2. " DECK / TYPE 2 " (EXAMPLE) INDICATES ROOF DECK SPAN DIRECTION AND DECK TYPE 2.
   TOS ELEVATION AT ROOF DECKS ARE AT BOD, TYP, UON.
   FOR DECK TYPE INFORMATION **RE: 7 / S101**
3. COORDINATE LOCATIONS AND SIZES OF ALL CHASES AND PENETRATIONS WITH MEP. COORDINATE EXACT LOCATION OF ALL MEP UNITS WITH MEP. FOR FRAMING AROUND ROOF OPENINGS **RE: 7 / S504**
4. FOR ELEVATOR SUPPORT DETAILS **RE: 7 / S502** & **RE: 6 / S502**
5. FOR BRACE ELEVATIONS AND DETAILS **RE: S801**.

   G.C. TO COORDINATE FINAL PIPE RUN LOCATIONS WITH MEP DRAWINGS
   ALL PIPE RUNS INDICATED IN THE STRUCTURAL DRAWINGS ARE FOR REFERENCE ONLY.
   FOR ADDITIONAL INFORMATION **RE: 14 / S504** & **RE: 15 / S504**
6. AT ROOF, PROVIDE (AS REQUIRED) RIDGE AND VALLEY PLATES, COLUMN CLOSURES, CANT. STRIPS, SUMP PLATES AT PIPING PENETRATIONS AND RECESSED SUMP PANS AT ROOF DRAINS. PROVIDE SUPPLEMENTAL FRAMING AT OPENINGS AS REQUIRED FOR SUPPORT OF METAL DECK. OPENINGS SHALL BE COORDINATED WITH ARCHITECTURAL AND MECHANICAL DRAWINGS.
7. ALL EXPOSED STEEL TO BE HOT DIPPED GALVANIZED.
8. JOISTS SUPPORTING RTU UNITS TO BE KCS JOISTS MATCHING THE SAME K-JOIST SIZE OR LARGER ADJACENT TO IT.
9. AT DECK CHANGE DIRECTION, STEEL FABRICATOR TO PROVIDE ANY NECESSARY CLOSURE PLATES.
10. WHERE K-JOISTS AND LH-JOISTS BEAR ON THE SAME BEAM, K-JOIST SEAT TO MATCH LH-JOIST SEAT.
11. ROOF BEAMS ADJACENT TO CAMBERED LONG SPAN JOISTS TO BE CAMBERED TO MAINTAIN PROPER DECK BEARING, STEEL FABRICATOR TO COORDINATE WITH JOIST MANUFACTURER.
12. BEAMS SUBJECT TO MOMENT CONNECTIONS, PROVIDE L3X3X1/4 AT 6'-0" OC FROM BEAM BOTTOM FLANGES TO ADJACENT JOIST OR BEAM TOP FLANGES.
13. GC TO COORDINATE WITH THE ELEVATOR SUBMITTAL TO DETERMINE THE EXACT SHAFT OPENING SIZES AND THE SLAB EDGE DIMENSIONS.

FSGROUP ARCHITECTS
16575 Village Drive
Houston Texas 77040
713 344 1752 PH
fsdesignbuild.com

PROJECT NAME

THE STATE OF TEXAS
FORT BEND COUNTY

INFORMATION TECHNOLOGY BUILDING
EUGENE HEIMANN CIRCLE
FORT BEND COUNTY . RICHMOND . TEXAS

CONSULTANTS

Dally + ASSOCIATES
STRUCTURAL | CIVIL
9800 Richmond Avenue, Suite 460
Houston, Texas 77042
t 713 337 8881
Texas Registered Engineering Firm
F-003426

PROFESSIONAL SEAL

STATE OF TEXAS
FRED DALLY
90904
05/15/2024

ISSUED FOR

ISSUED FOR PROPOSALS & PERMIT

REVISIONS

No.	DESCRIPTION	DATE

KEY PLAN

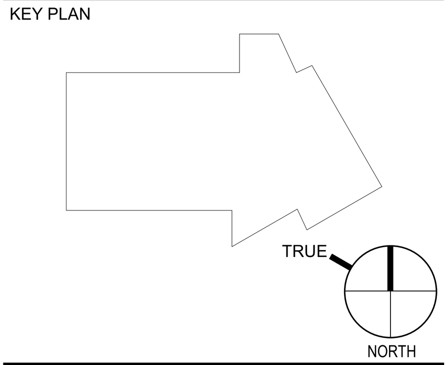

SHEET TITLE

FRAMING PLAN LEVEL 3

SCALE
1/8" = 1'-0"

DATE
05/15/24

PROJECT NUMBER
2319

SHEET NUMBER

S112

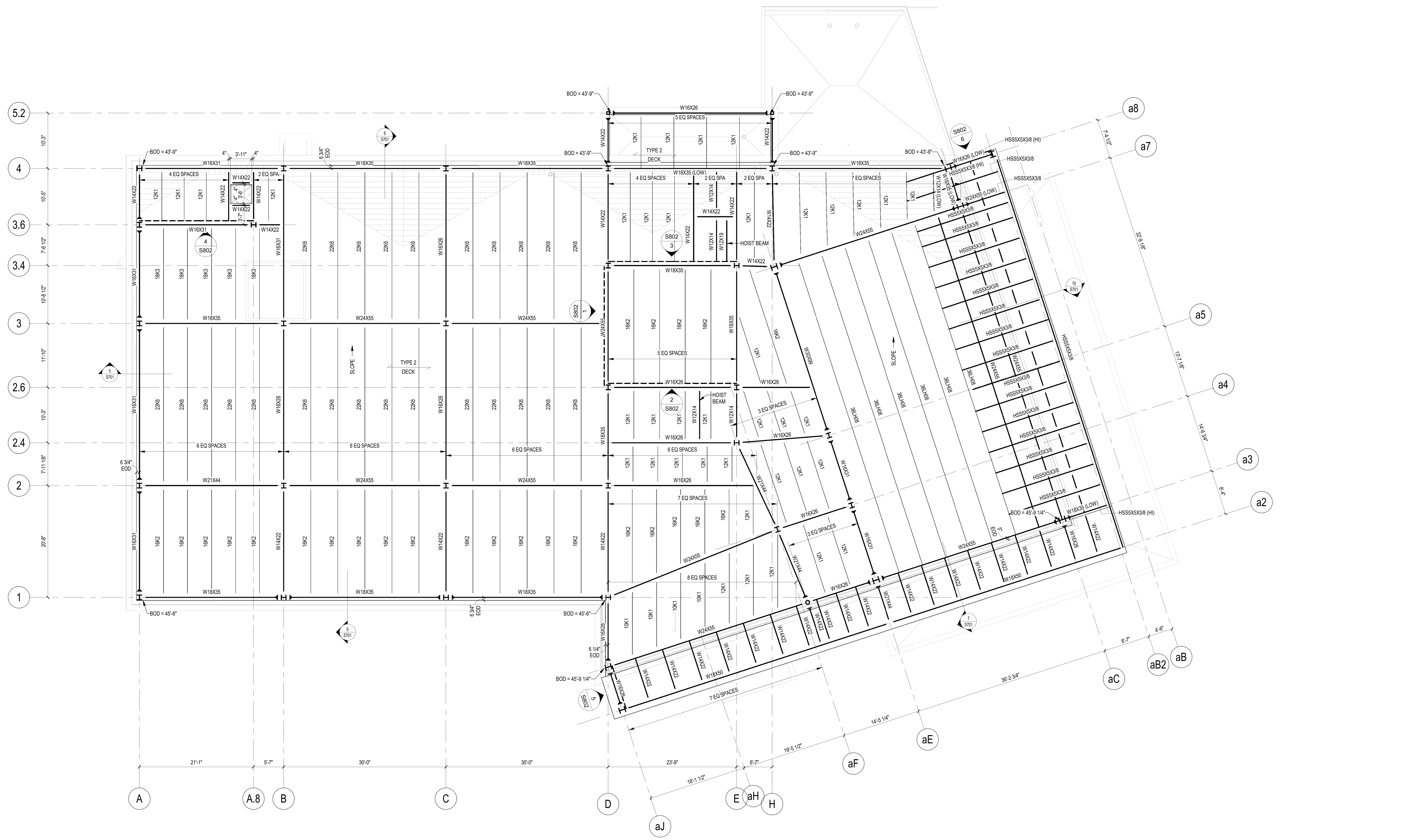

1 ROOF FRAMING PLAN
1/8" = 1'-0"

STEEL ROOF FRAMING NOTES:

1. ALL ELEVATIONS ARE RELATIVE TO DATUM ELEVATION.
2. "DECK / TYPE 2" (EXAMPLE) INDICATES ROOF DECK SPAN DIRECTION AND DECK TYPE 2.
   TOS ELEVATION AT ROOF DECKS ARE AT BOD, TYP, UON.
   FOR DECK TYPE INFORMATION **RE: 7 / S101**
3. COORDINATE LOCATIONS AND SIZES OF ALL CHASES AND PENETRATIONS WITH MEP.
   COORDINATE EXACT LOCATION OF ALL MEP UNITS WITH MEP.
   FOR FRAMING AROUND ROOF OPENINGS **RE: 7 / S504**
4. FOR ELEVATOR SUPPORT DETAILS **RE: 7 / S502** & **RE: 6 / S502**
5. FOR BRACE ELEVATIONS AND DETAILS **RE: S801**.

   G.C. TO COORDINATE FINAL PIPE RUN LOCATIONS WITH MEP DRAWINGS
   ALL PIPE RUNS INDICATED IN THE STRUCTURAL DRAWINGS ARE FOR REFERENCE ONLY.
   FOR ADDITIONAL INFORMATION **RE: 14 / S504** & **RE: 15 / S504**
6. AT ROOF, PROVIDE (AS REQUIRED) RIDGE AND VALLEY PLATES, COLUMN CLOSURES, CANT. STRIPS, SUMP PLATES AT PIPING PENETRATIONS AND RECESSED SUMP PANS AT ROOF DRAINS. PROVIDE SUPPLEMENTAL FRAMING AT OPENINGS AS REQUIRED FOR SUPPORT OF METAL DECK. OPENINGS SHALL BE COORDINATED WITH ARCHITECTURAL AND MECHANICAL DRAWINGS.
7. ALL EXPOSED STEEL TO BE HOT DIPPED GALVANIZED.
8. JOISTS SUPPORTING RTU UNITS TO BE KCS JOISTS MATCHING THE SAME K-JOIST SIZE OR LARGER ADJACENT TO IT.
9. AT DECK CHANGE DIRECTION, STEEL FABRICATOR TO PROVIDE ANY NECESSARY CLOSURE PLATES.
10. WHERE K-JOISTS AND LH-JOISTS BEAR ON THE SAME BEAM, K-JOIST SEAT TO MATCH LH-JOIST SEAT.
11. ROOF BEAMS ADJACENT TO CAMBERED LONG SPAN JOISTS TO BE CAMBERED TO MAINTAIN PROPER DECK BEARING, STEEL FABRICATOR TO COORDINATE WITH JOIST MANUFACTURER.
12. BEAMS SUBJECT TO MOMENT CONNECTIONS, PROVIDE L3X3X1/4 AT 6'-0" OC FROM BEAM BOTTOM FLANGES TO ADJACENT JOIST OR BEAM TOP FLANGES.
13. GC TO COORDINATE WITH THE ELEVATOR SUBMITTAL TO DETERMINE THE EXACT SHAFT OPENING SIZES AND THE SLAB EDGE DIMENSIONS.

FSGROUP ARCHITECTS
16575 Village Drive
Houston Texas 77040
713 344 1752 PH
fsdesignbuild.com

PROJECT NAME

INFORMATION TECHNOLOGY BUILDING
EUGENE HEIMANN CIRCLE
FORT BEND COUNTY . RICHMOND . TEXAS

CONSULTANTS

Dally + ASSOCIATES
STRUCTURAL | CIVIL
9800 Richmond Avenue, Suite 460
Houston, Texas 77042
t 713 337 8881
Texas Registered Engineering Firm
F-003426

PROFESSIONAL SEAL

FRED DALLY
90904
05/15/2024

ISSUED FOR

ISSUED FOR PROPOSALS & PERMIT

REVISIONS

No.	DESCRIPTION	DATE

KEY PLAN

TRUE NORTH

SHEET TITLE

ROOF FRAMING PLAN

SCALE 1/8" = 1'-0"

DATE 05/15/24

PROJECT NUMBER 2319

SHEET NUMBER

S150

SPREAD AND CONTINUOUS FOOTING SCHEDULE

MARK	DIMENSIONS			REINFORCING		REMARKS
	LENGTH	WIDTH	THICKNESS	BOTTOM	TOP	
F1	6'-0"	6'-0"	1'-6"	#7 @ 10" OC, EA. WAY		
F2	8'-0"	8'-0"	1'-6"	#7 @ 10" OC, EA. WAY		
F3	10'-0"	10'-0"	1'-6"	#7 @ 10" OC, EA. WAY		
F4	12'-0"	12'-0"	1'-6"	#7 @ 9" OC, EA. WAY		
F5	13'-0"	13'-0"	1'-6"	#7 @ 9" OC, EA. WAY		
F6	4'-0"	4'-0"	1'-6"	#7 @ 10" OC, EA. WAY		
CF1	RE: PLAN	10'-0"	1'-6"	#7 @ 9" OC, EA. WAY	#6 @ 10" OC, EA. WAY	
CF2	RE: PLAN	8'-0"	1'-6"	#7 @ 9" OC, EA. WAY	#6 @ 10" OC, EA. WAY	

SPREAD FOOTING GENERAL NOTES

1. A GEOTECHNICAL REPORT IS AVAILABLE FOR REVIEW **RE: 6 / S101**

2. THE INDEPENDENT TESTING LABORATORY SHALL CONFIRM THE ALLOWABLE SOIL BEARING CAPACITY IN THE FIELD AT THE ELEVATION DESIGNATED AS THE PLANE OF BEARING FOR THE FOOTING.
   a. ALLOWABLE BEARING PRESSURE OF 6,000 PSF

3. THE INDEPENDENT TESTING LABORATORY SHALL INSPECT THE BOTTOM AND SIDES OF THE FOOTING PRIOR TO PLACING REINFORCING AND CONCRETE.

4. CENTER ALL FOOTINGS UNDER THEIR COLUMNS AND WALLS, U.O.N.

5. PUMP OUT ANY STANDING WATER AND IMMEDIATELY PLACE REINFORCING STEEL AND CONCRETE.

6. PROVIDE NEW DEFORMED BILLET REINFORCING STEEL FOR FOOTINGS CONFORMING TO ASTM A615, GRADE 60.

7. UNIFORMLY DISTRIBUTE ALL SCHEDULE REINFORCING.

SPREAD FOOTING DETAILS

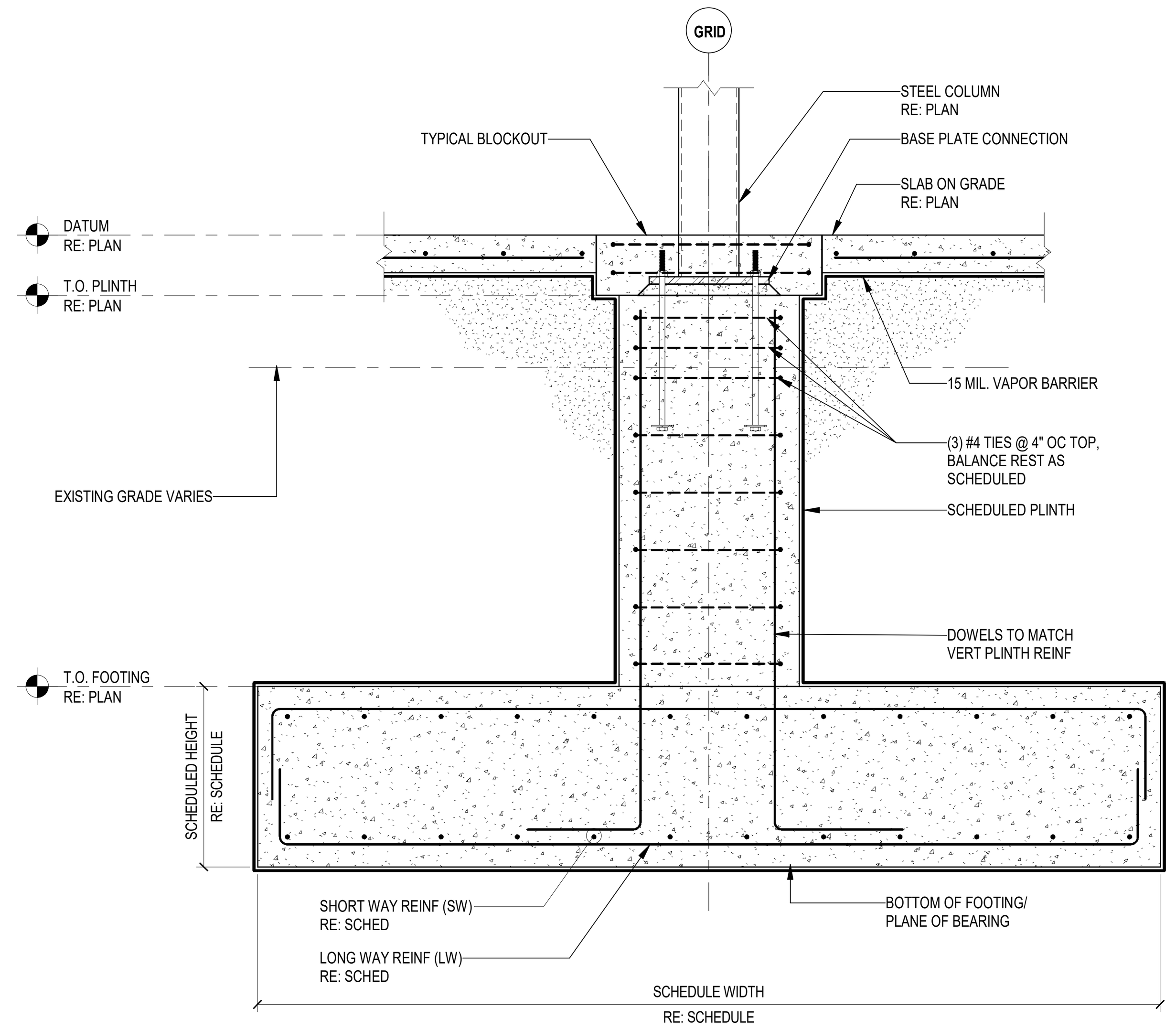

PLINTH SCHEDULE

MARK	PLINTH TYPE	REINFORCING		REMARKS
		VERTICAL	TIES	
P1	TYPE 1	(12) #7	#4 @ 10" OC	
P2	TYPE 2	(12) #7	#4 @ 10" OC	
P3	TYPE 3	(12) #7	#4 @ 10" OC	
P4	TYPE 4	(12) #7	#4 @ 10" OC	TYPICAL AT RE-ENTRANT CORNERS
P5	TYPE 5	(14) #7	#4 @ 10" OC	TYPICAL AT BRACE COLUMNS
P6	TYPE 6	(12) #7	#4 @ 10" OC	

PLINTH GENERAL NOTES

1. FOR PLINTH TYPE, LOCATION AND ORIENTATION REFER TO FOUNDATION PLAN VIEWS.

2. WHERE A PLINTH IS INTEGRAL WITH A BEAM, EXTEND THE HORIZONTAL REINFORCING THROUGH THE PLINTH.

3. PROVIDE (3) TIES @ 4" OC TO MATCH THE SCHEDULED TIES REINFORCING AT THE TOP OF EACH PLINTH, TYPICAL.

4. THE PLINTH DIMENSIONS SHOWN ARE MINIMUM. GENERAL CONTRACTOR TO COORDINATE WITH FINAL METAL BUILDING MANUFACTURER DRAWINGS AND INCREASE PLINTH DIMENSIONS AS NECESSARY TO SATISFY BASE PLATE & ANCHOR BOLT REQUIREMENTS. ALL PEMB ANCHOR BOLTS ARE TO BE CONFINED BY THE PLINTH REINFORCING WITH 4" MINIMUM CONCRETE COVER, TYPICAL.

PLINTH DETAILS

ALL DETAILS ARE PLAN VIEW UON

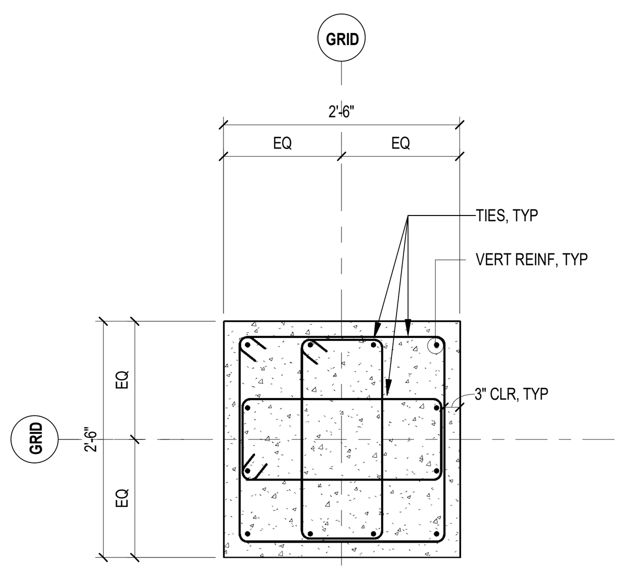

TYPE P1

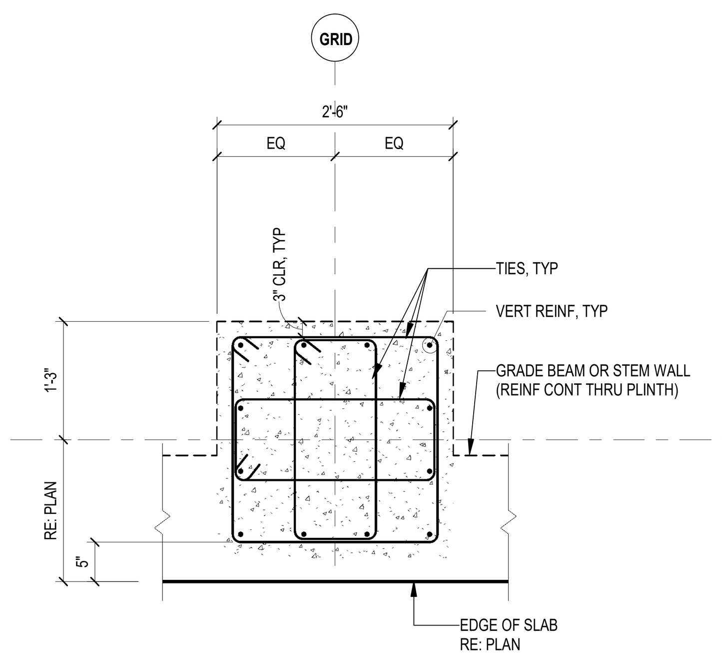

TYPE P2

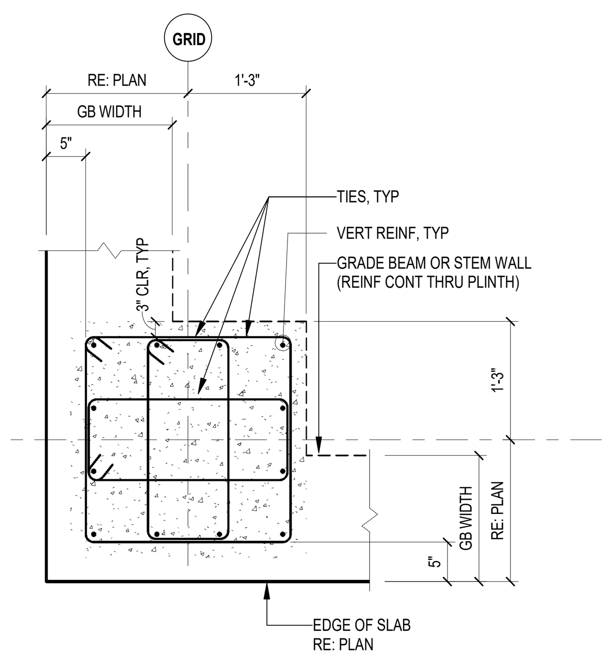

TYPE P3

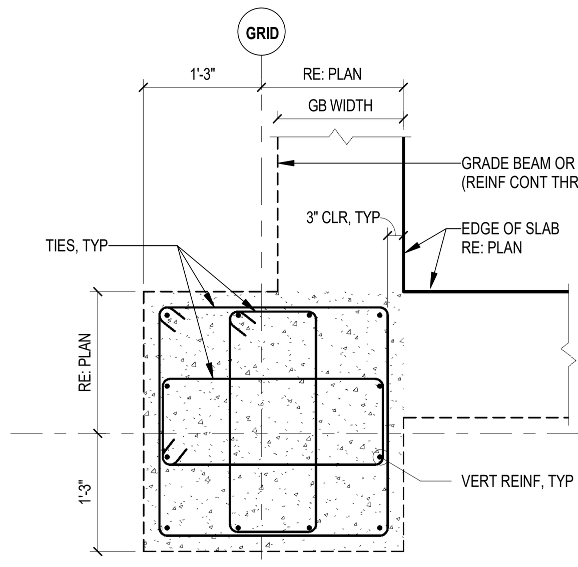

TYPE P4
(RE-ENTRANT CORNER)

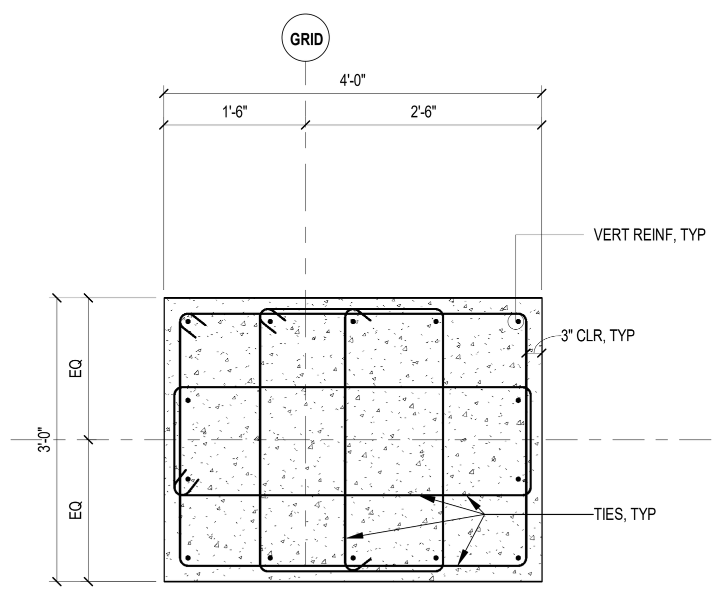

TYPE P5
(BRACES)

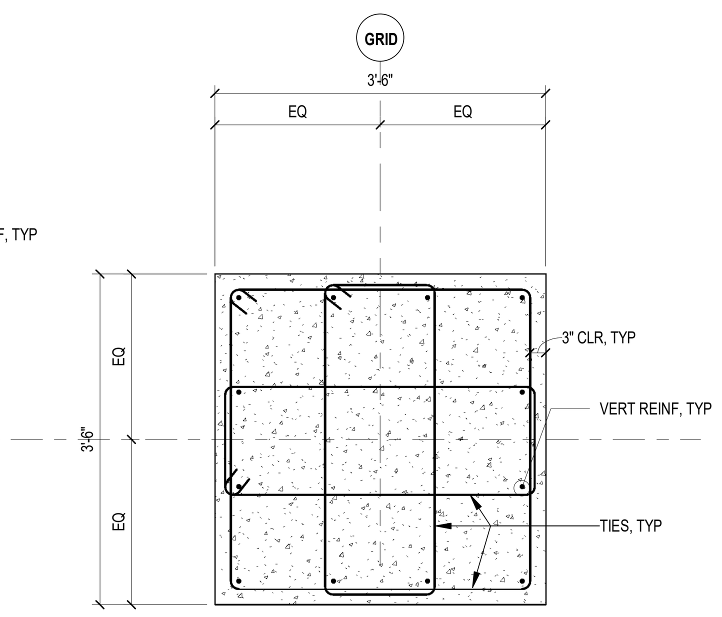

TYPE P6

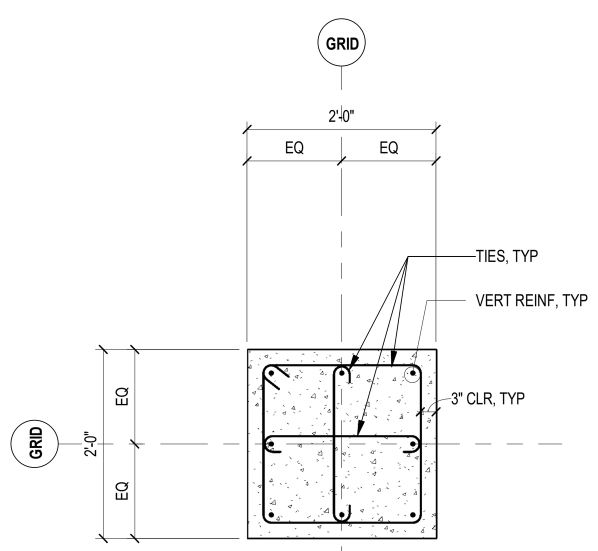

TYPE P7

FSGROUP ARCHITECTS

16575 Village Drive
Houston Texas 77040
713 344 1752 PH
fsdesignbuild.com

PROJECT NAME

THE STATE OF TEXAS · FORT BEND COUNTY

INFORMATION TECHNOLOGY BUILDING
EUGENE HEIMANN CIRCLE
FORT BEND COUNTY . RICHMOND . TEXAS

CONSULTANTS

Dally + ASSOCIATES
STRUCTURAL | CIVIL

9800 Richmond Avenue, Suite 460
Houston, Texas 77042
t 713 337 8881
Texas Registered Engineering Firm
F-003426

PROFESSIONAL SEAL

STATE OF TEXAS
FRED DALLY
90904
05/15/2024

ISSUED FOR
ISSUED FOR PROPOSALS & PERMIT

REVISIONS

No.	DESCRIPTION	DATE

KEY PLAN

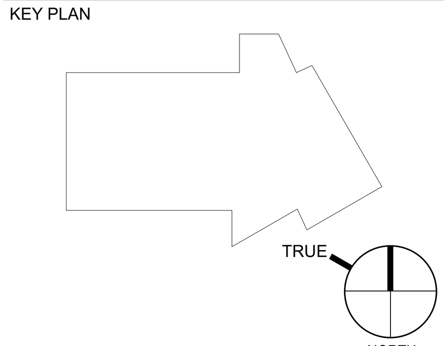

SHEET TITLE
SPREAD FOOTING & PLINTH SCHEDULE & DETAILS

SCALE
3/4" = 1'-0"

DATE
05/15/24

PROJECT NUMBER
2319

SHEET NUMBER
S301

GRADE BEAM SCHEDULE

MARK	WIDTH	DEPTH	TOP REINFORCING	MIDDLE REINFORCING	BOTTOM REINFORCING	TIES	REMARKS
GB1	1'-4"	2'-0"	(3) #7	-	(3) #7	#4 @ 12" OC	
GB2	2'-2"	2'-0"	(5) #7	-	(5) #7	#4 @ 10" OC	

TYPICAL GRADE BEAM AND STRAP BEAM DETAILS

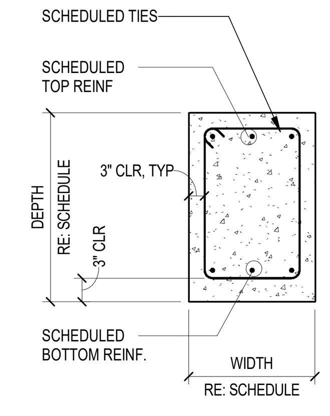

TYPICAL GRADE BEAM AND STRAP BEAM SECTION

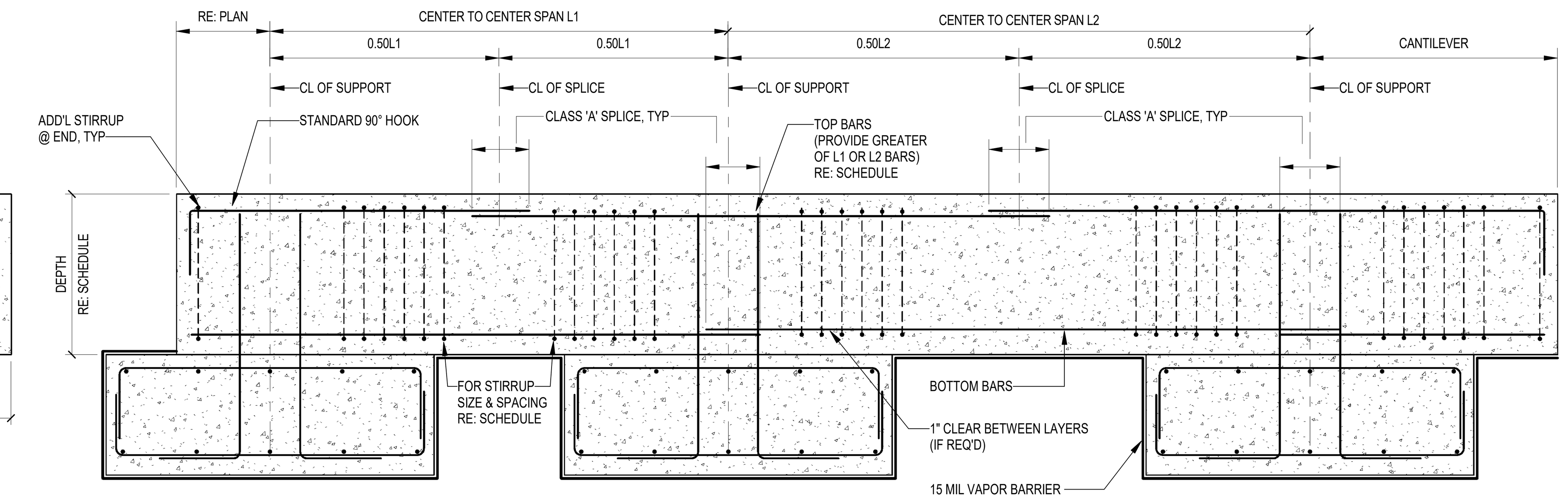

TYPICAL GRADE BEAM AND STRAP BEAM ELEVATION

TYPICAL GRADE BEAM DETAILS

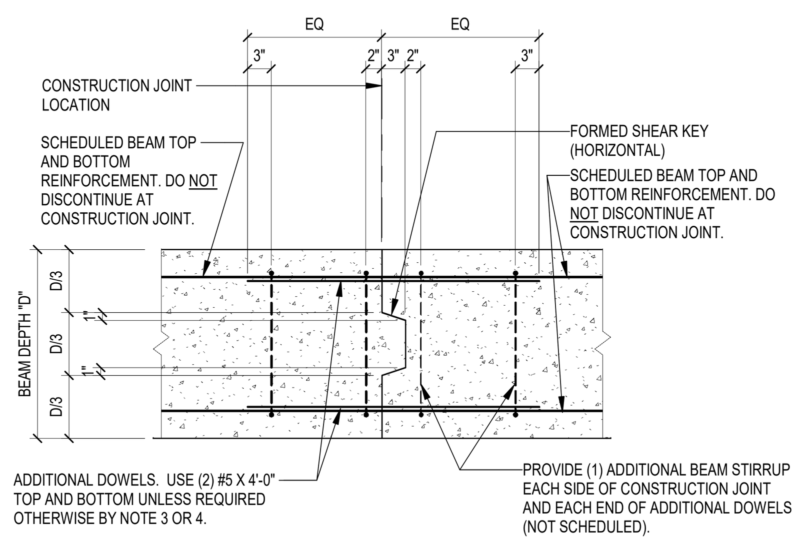

NOTES:
1. GENERAL CONTRACTOR SHALL SUBMIT DESIRED CONSTRUCTION JOINT LAYOUT AS A SHOP DRAWING FOR APPROVAL A MINIMUM OF TWO WEEK PRIOR TO POUR.
2. CONSTRUCTION JOINT LOCATIONS SHALL BE COORDINATED WITH REINFORCING STEEL SUPPLIER AND ERECTOR.
3. ACCEPTABLE JOINT LOCATIONS ARE AS FOLLOWS:
   a. FOR BEAMS NOT SUPPORTING INTERSECTING BEAMS: PLACE JOINT MIDDLE THIRD OF SPAN.
   b. FOR BEAMS SUPPORTING INTERSECTING BEAMS, CHECK WITH STRUCTURAL ENGINEER.
4. FOR JOINT LOCATIONS OTHER THAN WITHIN MIDDLE THIRD OF SPAN, CONTRACTOR SHALL COORDINATE REQUIRED ADDITIONAL REINFORCEMENT WITH THE ENGINEER ON THE SHOP DRAWINGS.

1 TYPICAL GRADE BEAM CONSTRUCTION JOINT
3/4" = 1'-0"

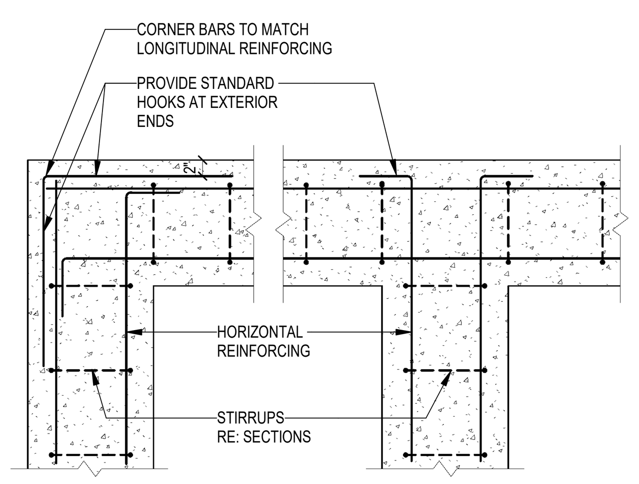

2 TYP GRADE BEAM REINF. AT INTERSECTIONS
3/4" = 1'-0"

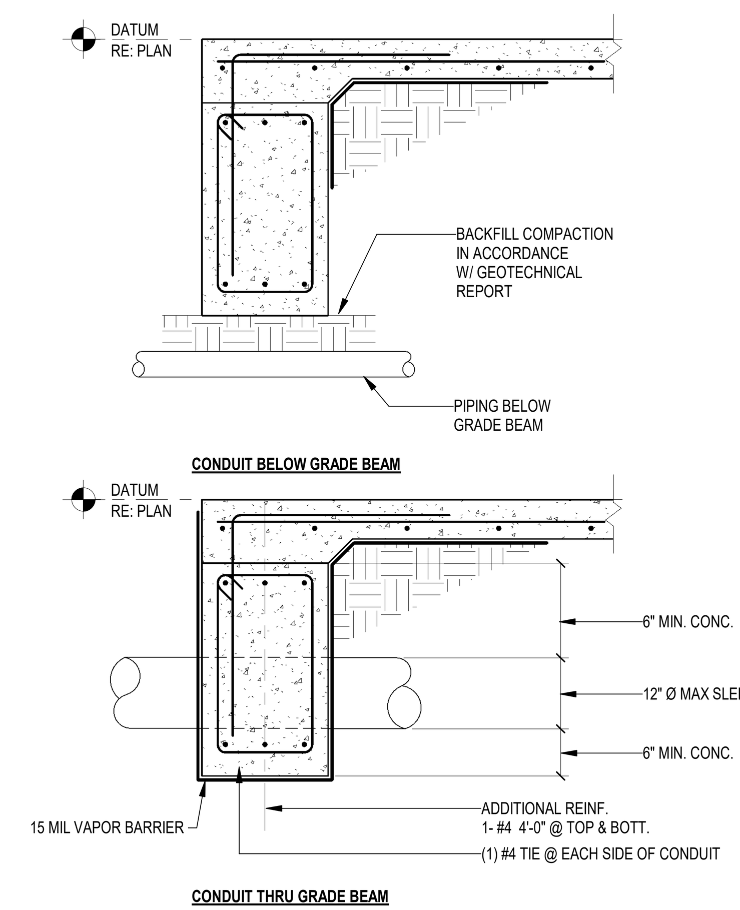

3 TYPICAL CONDITION OF CONDUIT
3/4" = 1'-0"

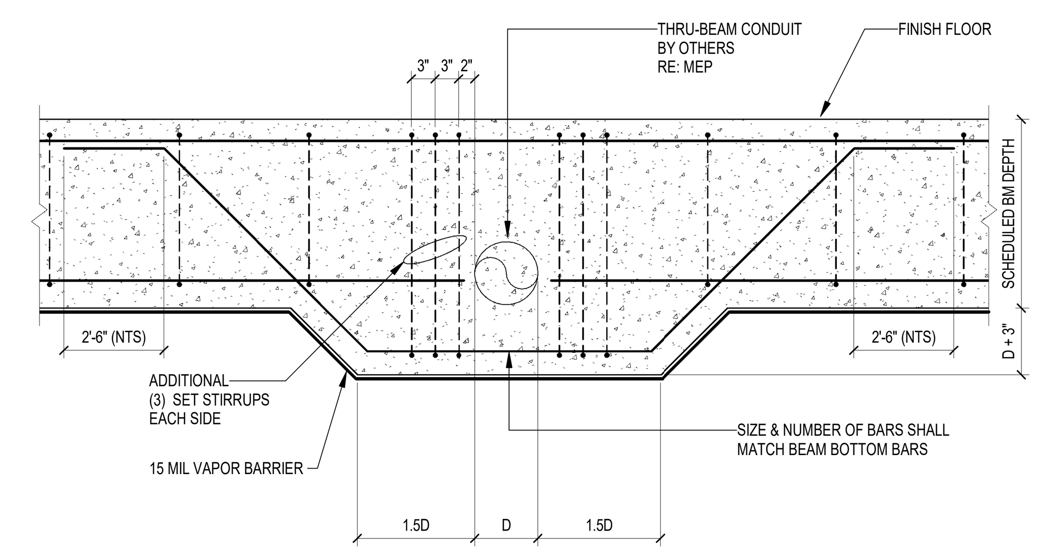

4 TYPICAL THRU. BEAM CONDUIT
3/4" = 1'-0"

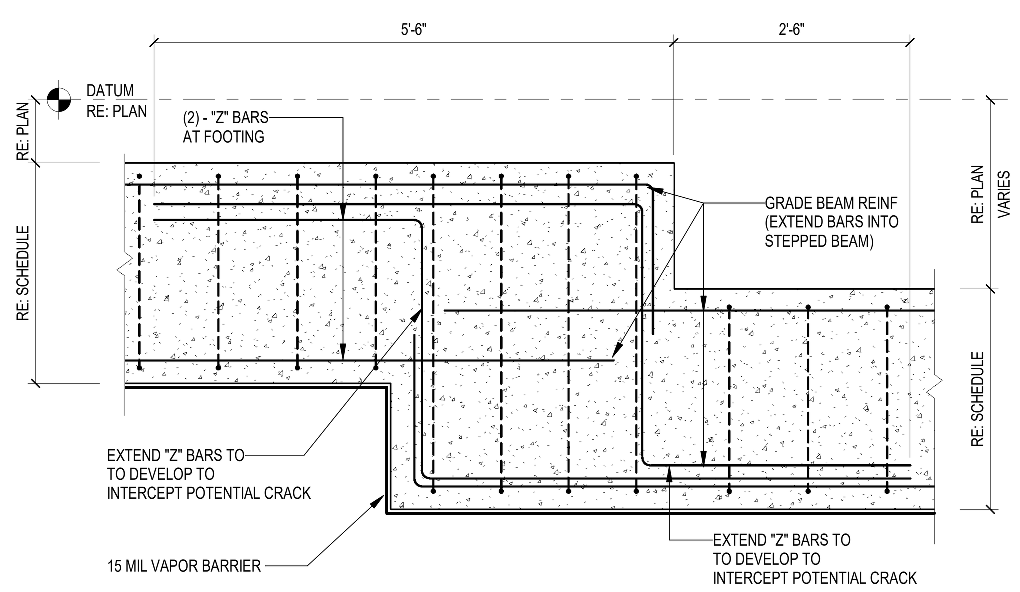

5 TYPICAL GRADE BEAM STEP
3/4" = 1'-0"

FSGROUP ARCHITECTS
16575 Village Drive
Houston Texas 77040
713 344 1752 PH
fsdesignbuild.com

PROJECT NAME

INFORMATION TECHNOLOGY BUILDING
EUGENE HEIMANN CIRCLE
FORT BEND COUNTY . RICHMOND . TEXAS

CONSULTANTS

Dally + ASSOCIATES
STRUCTURAL | CIVIL
9800 Richmond Avenue, Suite 460
Houston, Texas 77042
t 713 337 8881
Texas Registered Engineering Firm
F-003426

PROFESSIONAL SEAL

ISSUED FOR

ISSUED FOR PROPOSALS & PERMIT

REVISIONS

No.	DESCRIPTION	DATE

KEY PLAN

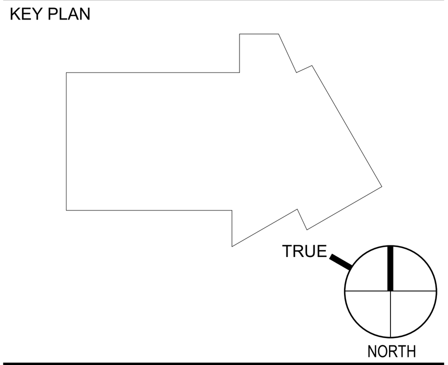

SHEET TITLE

GRADE BEAM SCHEDULE AND DETAILS

SCALE 3/4" = 1'-0"

DATE 05/15/24

PROJECT NUMBER 2319

SHEET NUMBER

S302

1. STRUCTURAL STEEL COLUMN SCHEDULE AND DETAILS

LEVEL	COLUMN MARK	C1	C2	C3	C4	C5	C6	C7	C8	C9			
CAP PLATE DETAIL		-	-	-	A/S302	-	-	-	-	-			
ROOF BOD ELEVATION = EL +/- 45'-0" VARIES (F.V.) THIRD (LEVEL 3) = +30'-0" (F.V.) TOC. ELEVATION = RE: PLAN SECOND FLOOR (LEVEL 2) = +16'-0" (F.V.) TOC. ELEVATION = RE: PLAN DATUM F.F. EL. 0'-0" = RE: G.C. (F.V.) 0'-0"		W10X88	W10X77	W12X136	W10X60	HSS8X8X1/2	W10X68	HSS6X6X1/2	HSS6X6X5/8	HSS8.625X0.625			
BOTTOM OF BASE PLATE EL.		- 10 1/2"	- 10 1/2"	- 10 1/2"	- 10 1/2"	- 10 1/2"	- 10 1/2"	- 10 1/2"	- 10 1/2"	- 10 1/2"			
BASE PLATE MARK		BP1,BP7	BP1	BP2	BP1	BP3	BP1	BP1	BP5	BP8			
REMARKS		-	-	-	-	-	-	-	-	-			

A. TYPICAL COLUMN CAP PLATE DETAIL
(NO SCALE)

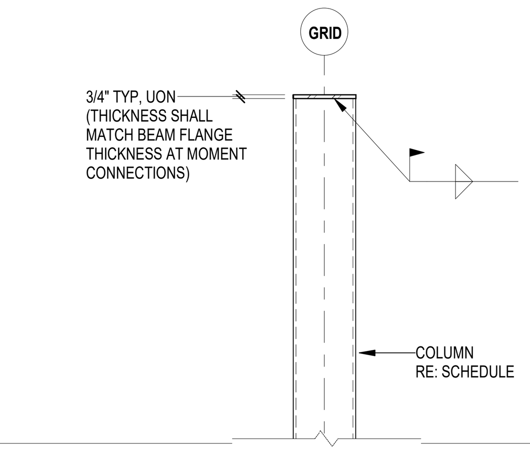

B. COLUMN GENERAL NOTES

1. PROVIDE STRUCTURAL STEEL FOR W SHAPES CONFORMING TO ASTM 992, GRADE 50.
2. PROVIDE STRUCTURAL STEEL FOR HSS COLUMNS CONFORMING TO ASTM A500, GRADE B.
3. PROVIDE STEEL FOR STIFFENER PLATES, CONNECTION PLATES AND ANGLES CONFORMING TO ASTM A36.
4. SAW OR MILL SURFACES NOTED FIN. (FINISHED) FOR TRUE AND FULL CONTACT.
5. USE E70XX WELDING ELECTRODES FOR ALL WELDS, UNLESS OTHERWISE NOTED.
6. PROVIDE WEB DOUBLER PLATES IF REQUIRED TO SATISFY DESIGN DEMANDS.

C. COLUMN REMARKS

D. STUB COLUMN BASE PLATE DETAIL
(NO SCALE)

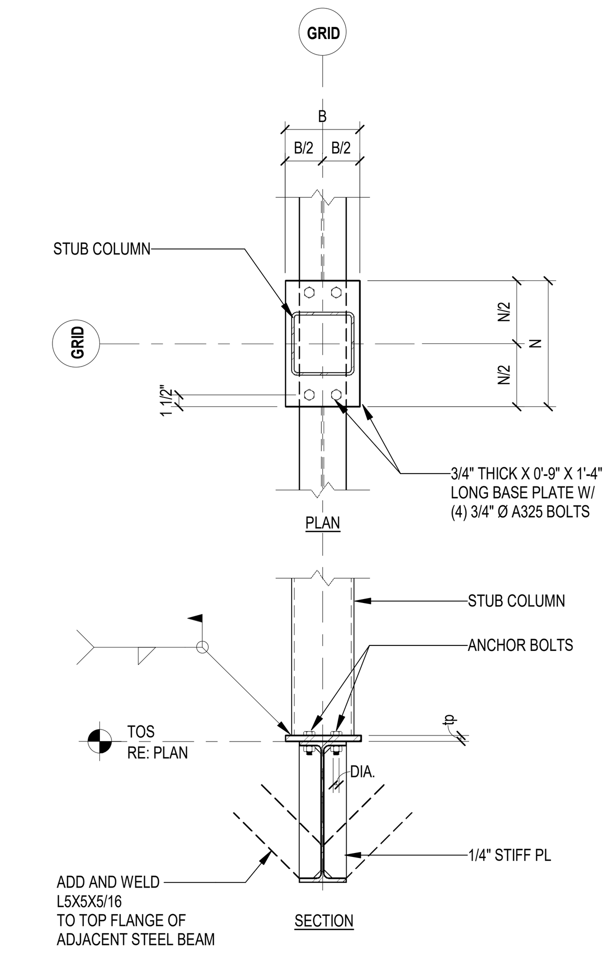

E. BASE PLATE GENERAL NOTES

1. PROVIDE STEEL FOR BASE PLATES CONFORMING TO GRADE 50
2. PROVIDE HOLES IN BASE PLATES IN ACCORDANCE WITH AISC 14TH EDITION.
3. PROVIDE ANCHOR RODS CONFORMING TO ASTM F1554, GRADE 55 WELDABLE.
4. PROVIDE ANCHOR RODS WITH PLATE WASHERS AND HEX NUTS.
5. USE E70XX WELDING ELECTRODES FOR ALL WELDS, UNLESS OTHERWISE NOTED.
6. MILL SURFACES NOTED FIN. (FINISHED) FOR TRUE AND FULL CONTACT.
7. SET ANCHOR RODS WITH TEMPLATE.
8. PROVIDE NON-METALLIC SHRINK-RESISTANT GROUT WITH 8000 PSI MINIMUM COMPRESSIVE STRENGTH AT 28-DAYS.

2. BASE PLATE SCHEDULE AND DETAILS

PLATE MARK	PLATE TYPE	DIMENSIONS B (IN)	DIMENSIONS N (IN)	DIMENSIONS tp (IN)	ANCHOR RODS NUMBER	ANCHOR RODS DIA. (IN)	ANCHOR RODS PROJECTION, P (IN)	ANCHOR RODS LENGTH, L (IN)	WELD SIZE W (IN)	REMARKS
BP1	A	18	18	1 1/2"	4	1 1/4"	6	2'-2"	5/16	
BP2	A	22	22	1 3/4"	6	1 1/4"	6	2'-2"	5/16	
BP3	B	18	18	1 1/4"	6	1 1/4"	6	2'-2"	5/16	X = 11" AT BRACING
BP4	D	22	30	1 1/2"	6	1 1/4"	6	2'-2"	5/16	X = 11" AT BRACING
BP5	B	16	16	1 1/4"	4	1"	6	2'-2"	5/16	
BP6	E	30	30	1 1/2"	6	1 1/4"	6	2'-2"	5/16	@ BOTH AXIS BRACING CONDITIONS
BP7	F	24	24	2"	8	1 1/4"	6	2'-2"	5/16	@ MOMENT FRAME COLUMNS
BP8	C	20	20	1 1/4"	4	1 1/4"	6	2'-2"	5/16	

TYPICAL ANCHOR ROD CLEARANCE SCHEDULE	
ROD Ø	CLEAR DIM
1"	2"
1 1/4"	2-1/4"
1-1/2"	2-1/2"

NOTED AS "CLR" ON BASEPLATE DETAILS

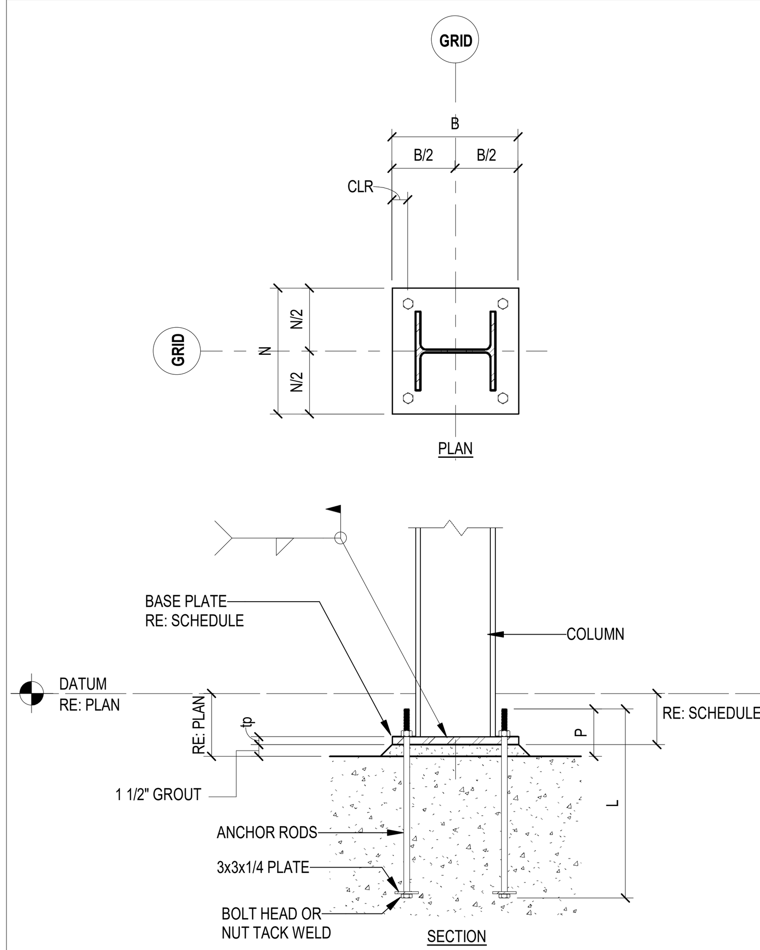

TYPE A

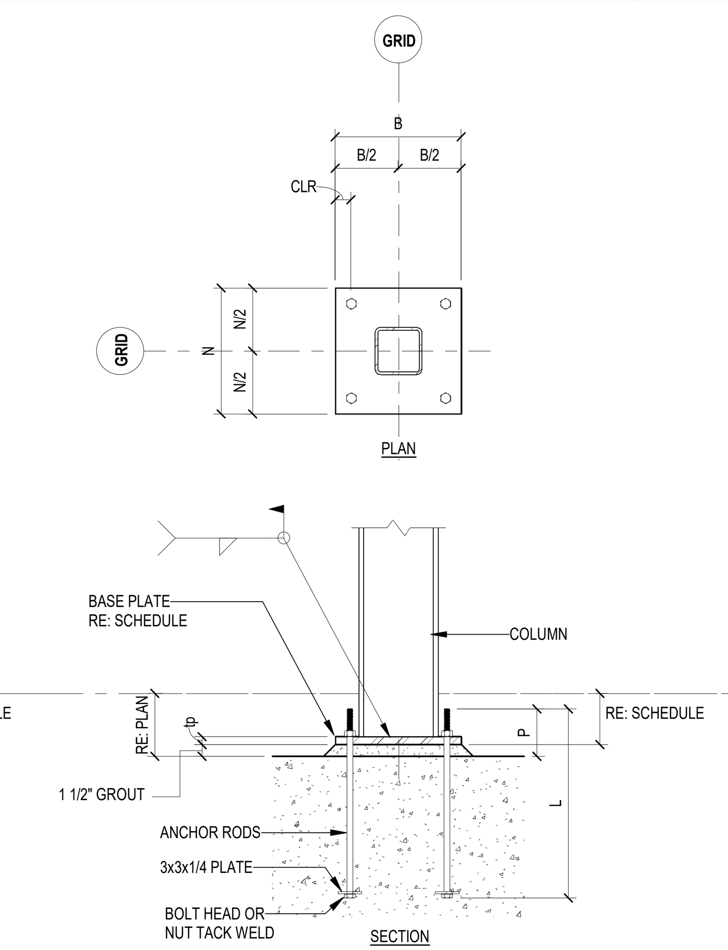

TYPE B

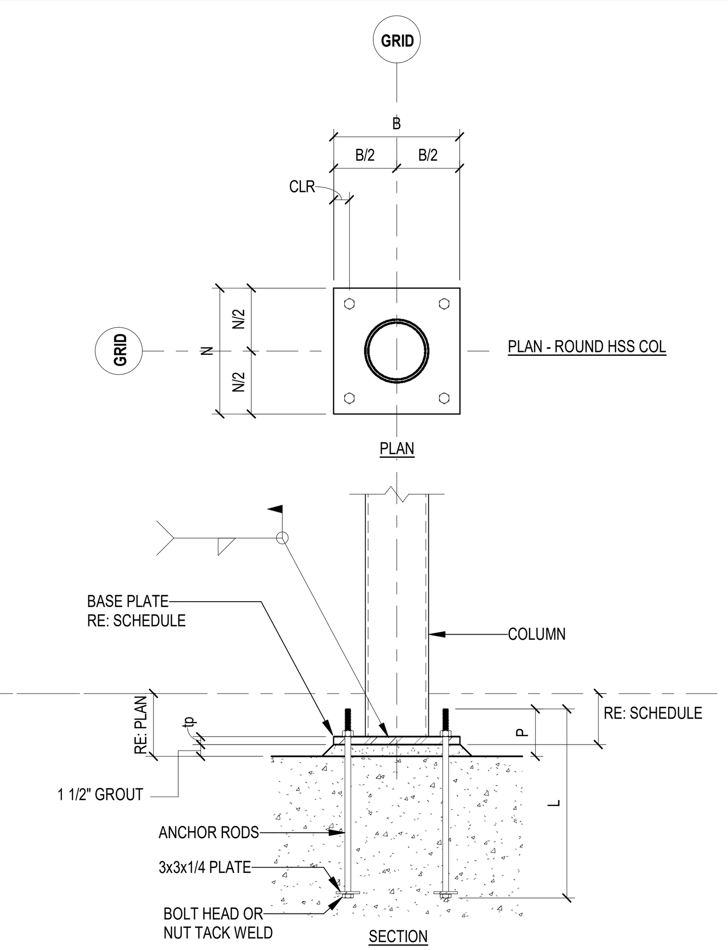

TYPE C

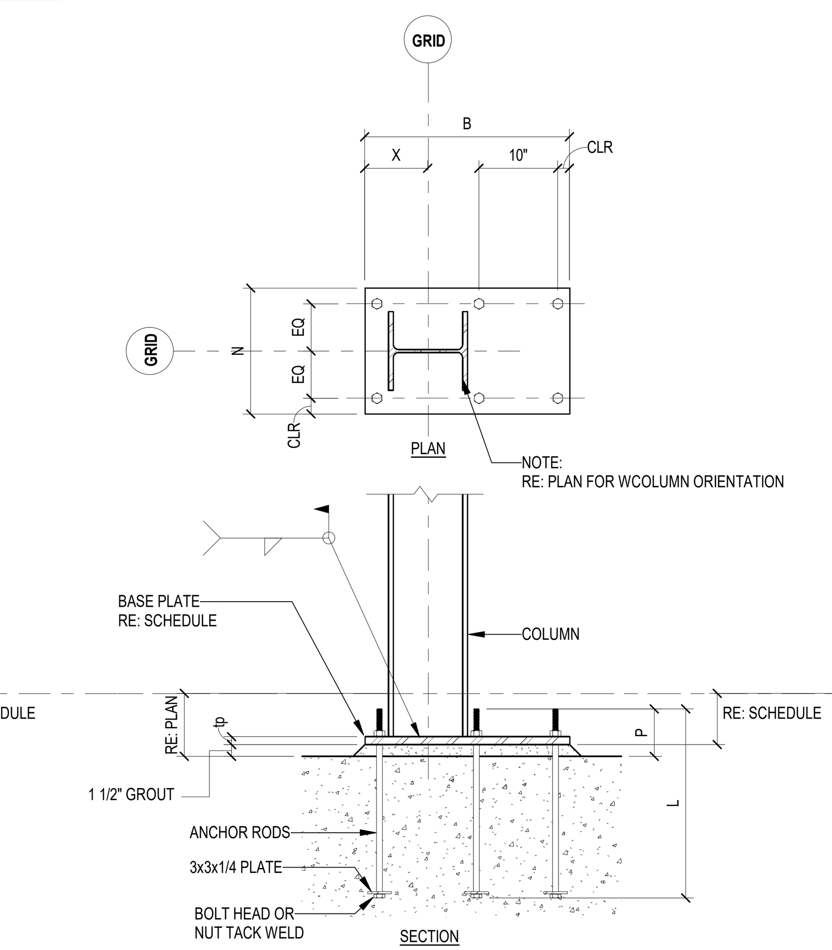

TYPE D

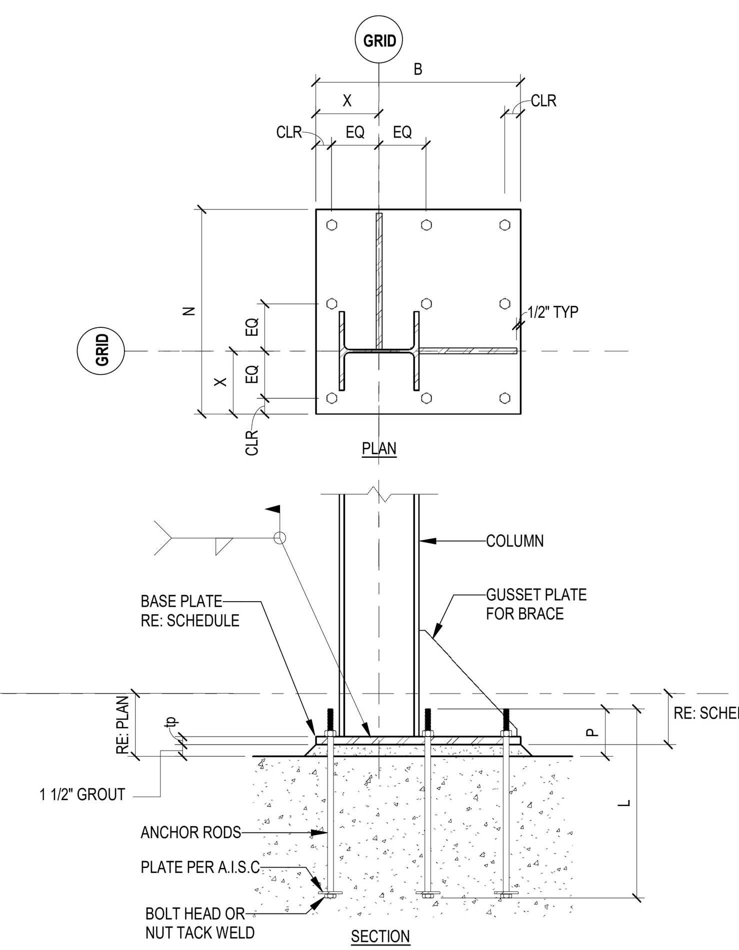

TYPE E

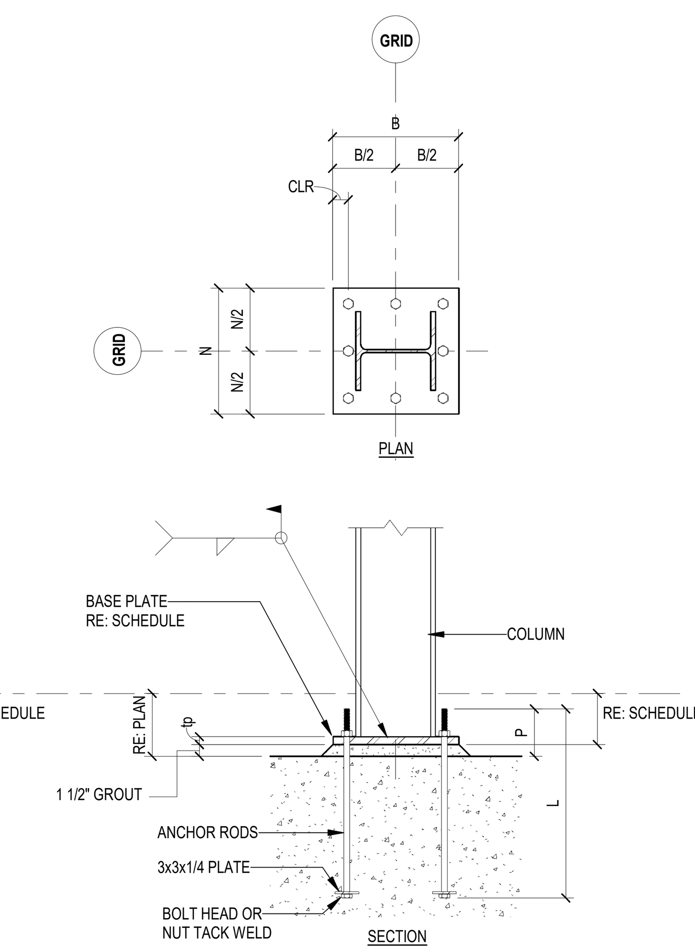

TYPE F

FSGROUP ARCHITECTS
16575 Village Drive
Houston Texas 77040
713 344 1752 PH
fsdesignbuild.com

PROJECT NAME

THE STATE OF TEXAS · FORT BEND COUNTY

INFORMATION TECHNOLOGY BUILDING
EUGENE HEIMANN CIRCLE
FORT BEND COUNTY . RICHMOND . TEXAS

CONSULTANTS

Dally + ASSOCIATES
STRUCTURAL | CIVIL
9800 Richmond Avenue, Suite 460
Houston, Texas 77042
1 713 337 8881
Texas Registered Engineering Firm
F-003426

PROFESSIONAL SEAL

FRED DALLY
90904
05/15/2024

ISSUED FOR
ISSUED FOR PROPOSALS & PERMIT

REVISIONS

No.	DESCRIPTION	DATE

KEY PLAN

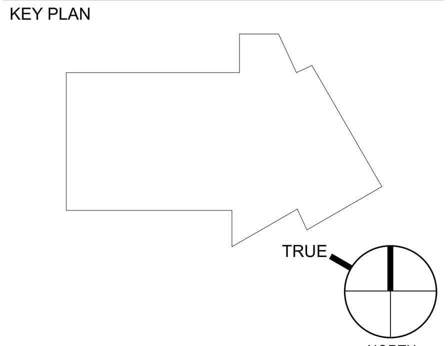

SHEET TITLE
STEEL COLUMN SCHEDULE & DETAILS

SCALE: As indicated
DATE: 05/15/24
PROJECT NUMBER: 2319
SHEET NUMBER
S303

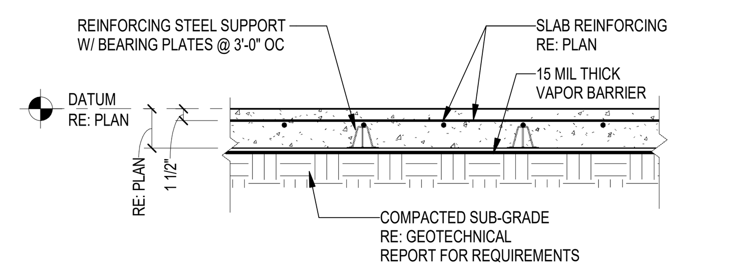

1 TYPICAL SLAB SECTION
3/4" = 1'-0"

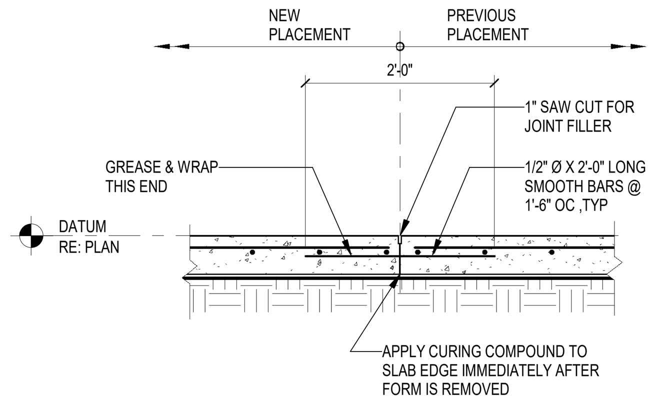

2 TYPICAL SECTION - CONSTRUCTION JOINT
3/4" = 1'-0"

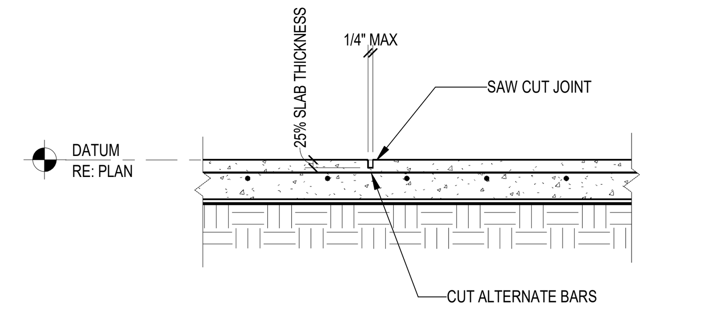

3 TYPICAL SECTION - CONTROL JOINT
3/4" = 1'-0"

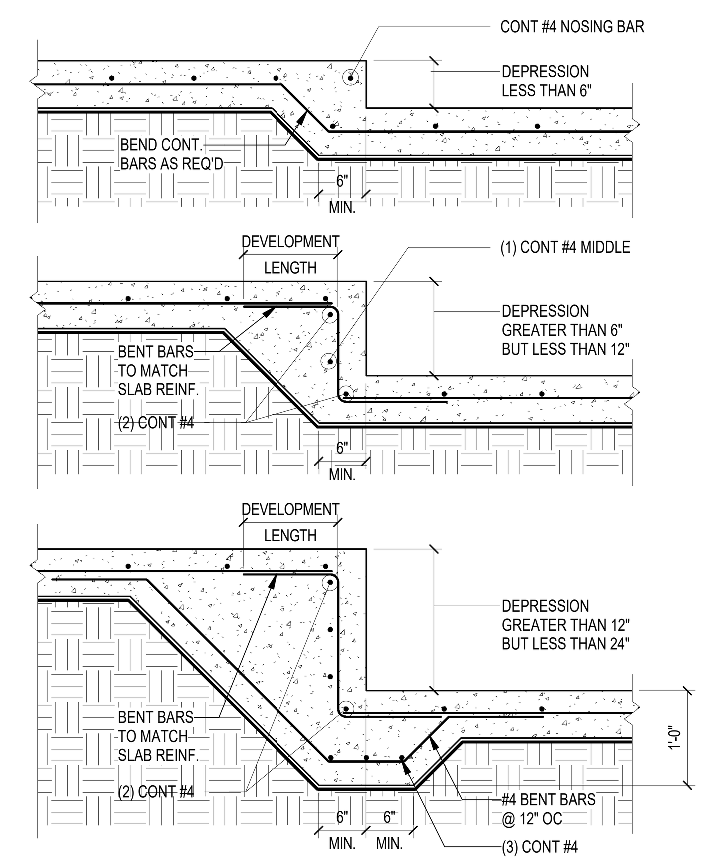

4 TYPICAL SLAB DEPRESSION DETAILS
3/4" = 1'-0"

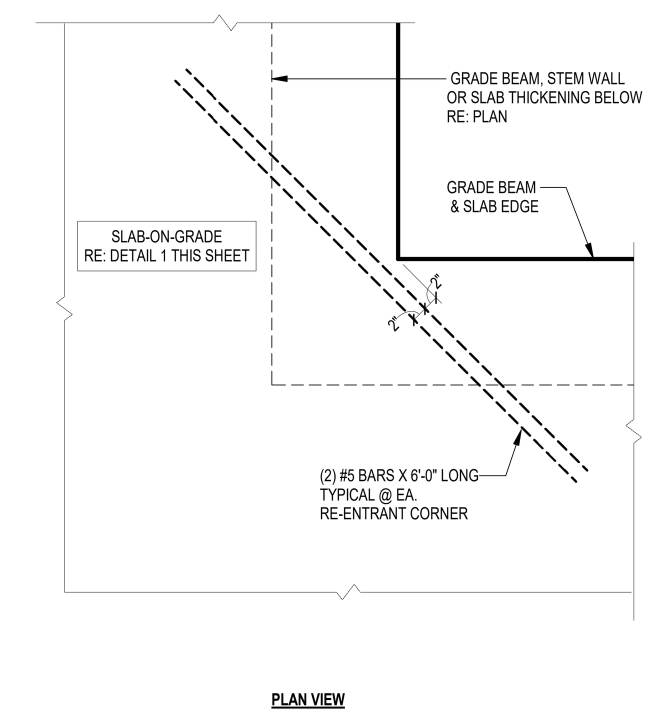

5 TYPICAL RE-ENTRANT CORNER REINF.
3/4" = 1'-0"

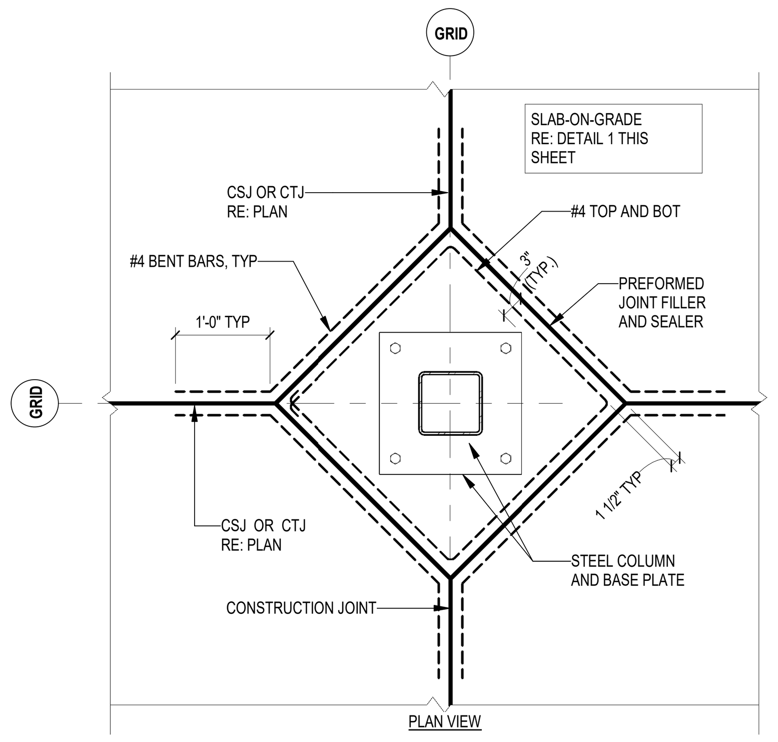

6 INTERIOR COLUMN BLOCKOUT
3/4" = 1'-0"

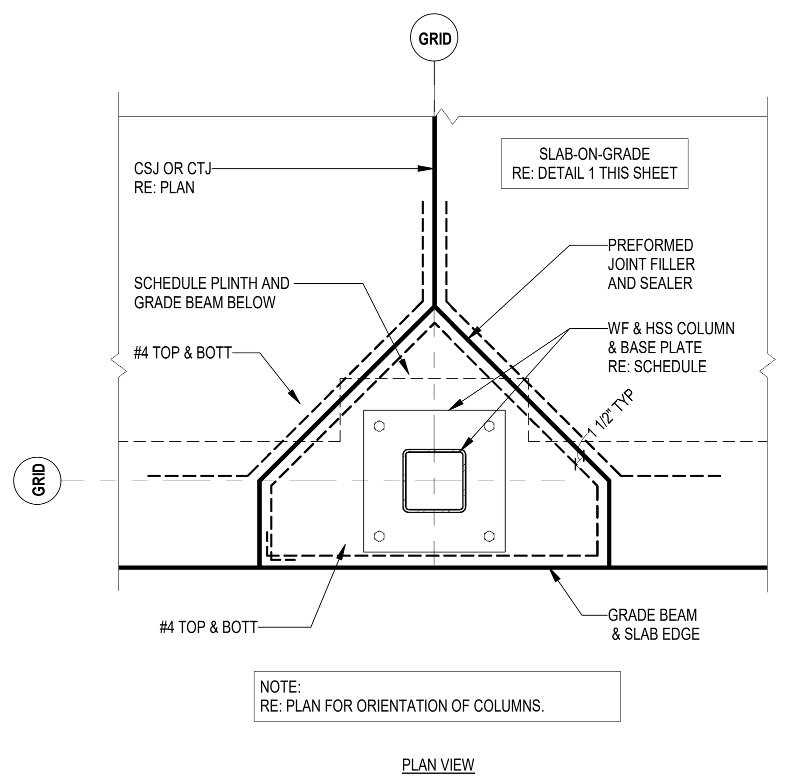

7 PERIMETER COLUMN BLOCKOUT
3/4" = 1'-0"

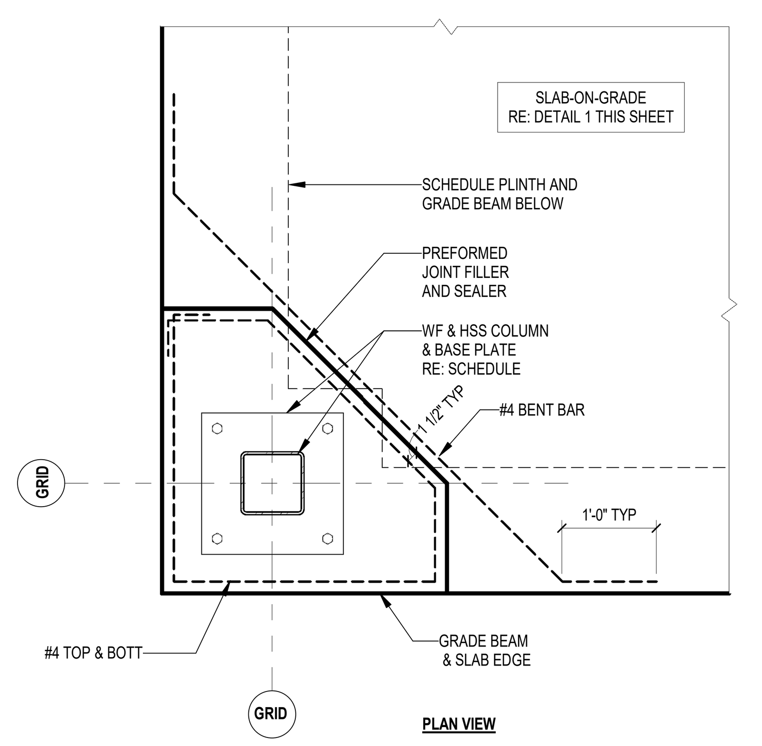

8 EXTERIOR CORNER COLUMN BLOCKOUT
3/4" = 1'-0"

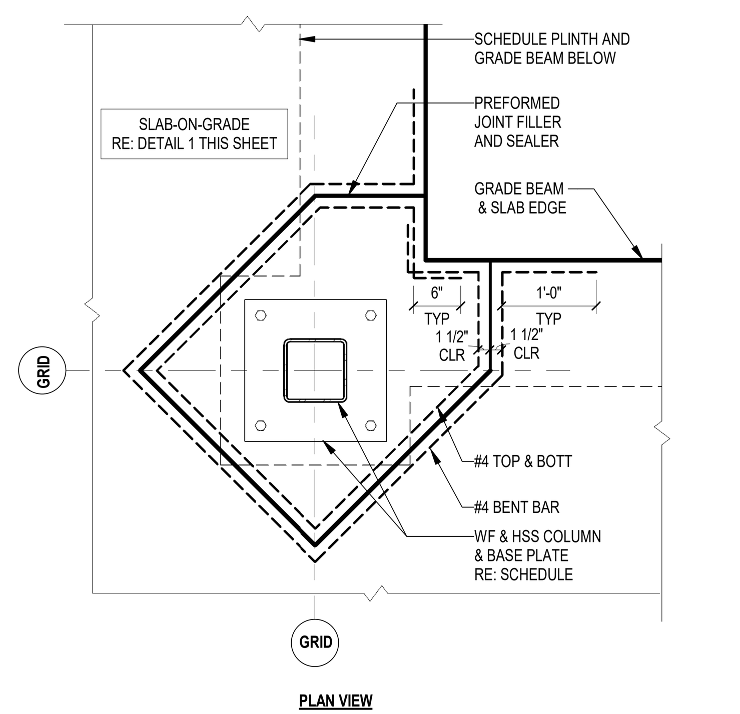

9 RE-ENTRANT CORNER COLUMN BLOCKOUT
3/4" = 1'-0"

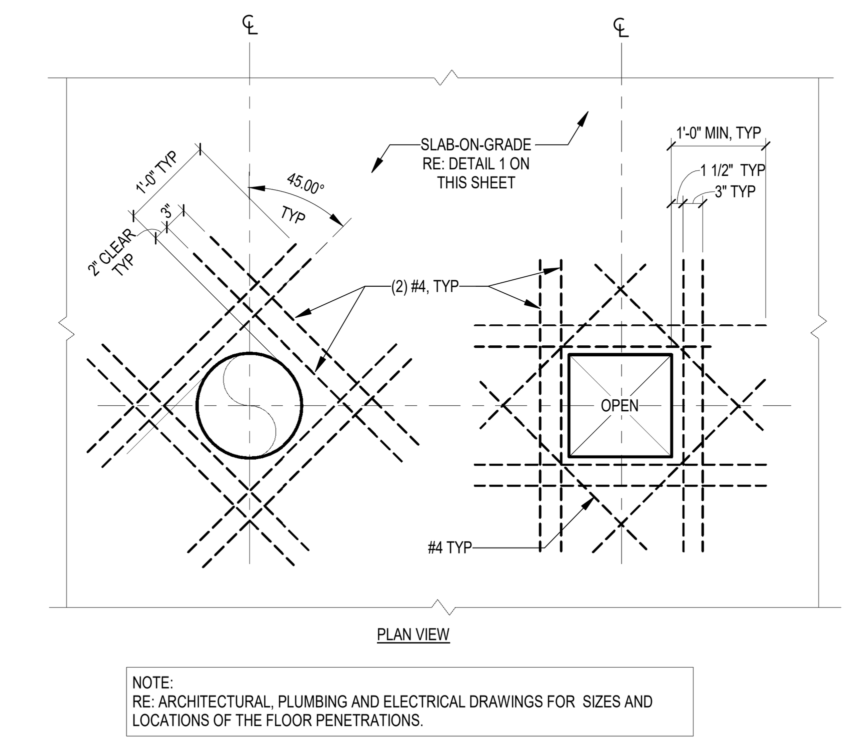

10 SLAB REINF. AT OPENING 2'-0" OR LESS
3/4" = 1'-0"

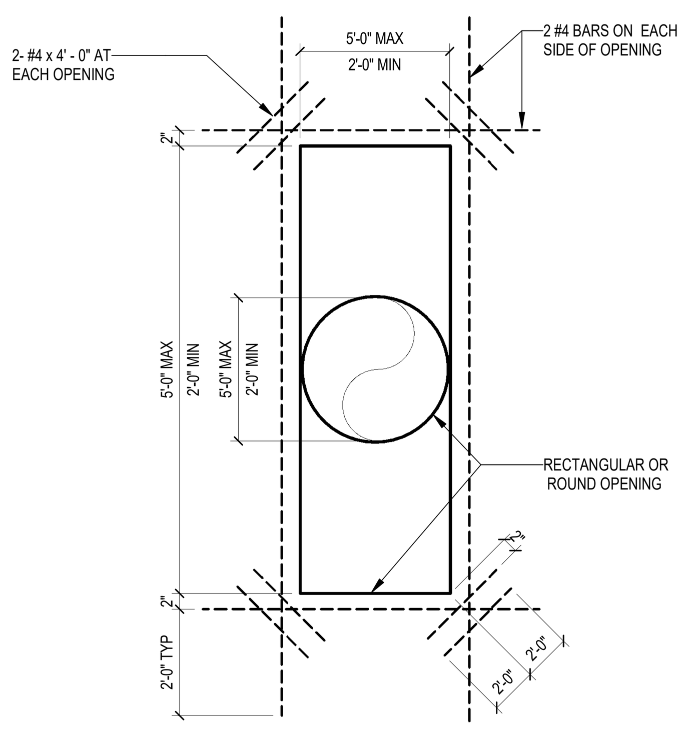

11 SLAB REINF. AT OPENING 5'-0" OR LESS
3/4" = 1'-0"

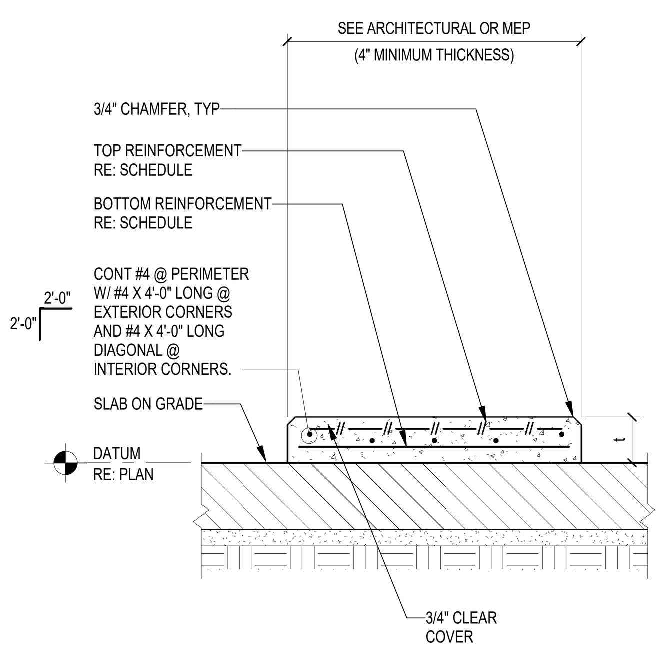

ROUGHEN SURFACE AND ADD BONDING AGENT TO EXIST. SURFACE PRIOR TO HOUSEKEEPING PAD POUR

NOTE:
GENERAL CONTRACTOR TO COORDINATE WITH MECHANICAL DRAWINGS AND SPECIFICATIONS TO DETERMINE REQUIREMENTS FOR HOUSEKEEPING PADS OVER SLAB ON GRADE AND PROVIDE WHERE REQUIRED WHETHER SHOWN ON STRUCTURAL DRAWINGS OR NOT. COORDINATE DIMENSIONS AND OTHER SPECIAL REQUIREMENTS WITH EQUIPMENT MANUFACTURERS AS REQUIRED.

HOUSEKEEPING PAD REINFORCING SCHEDULE

PAD THICKNESS	TOP REINFORCEMENT	BOTTOM REINFORCEMENT
t <= 4"	6"x 6",W2.9 x W2.9	NONE
4" < t <= 6"	4"x 4",W4.0 x W4.0	NONE
6" < t <= 8"	4"x 4",W5.5 x W5.5	NONE
8" < t <= 12"	#4@12"EW	#3@18"EW
12" < t <= 16"	#4@12"EW	#4@12"EW

12 HOUSEKEEPING PAD
3/4" = 1'-0"

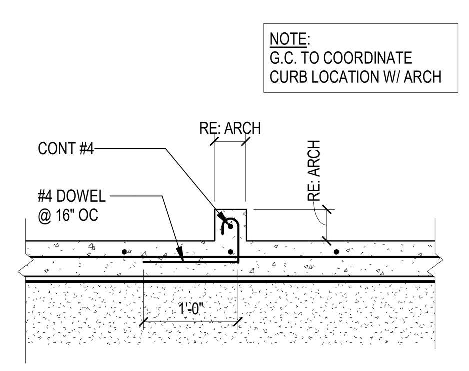

13 TYPICAL CURB DETAIL
3/4" = 1'-0"

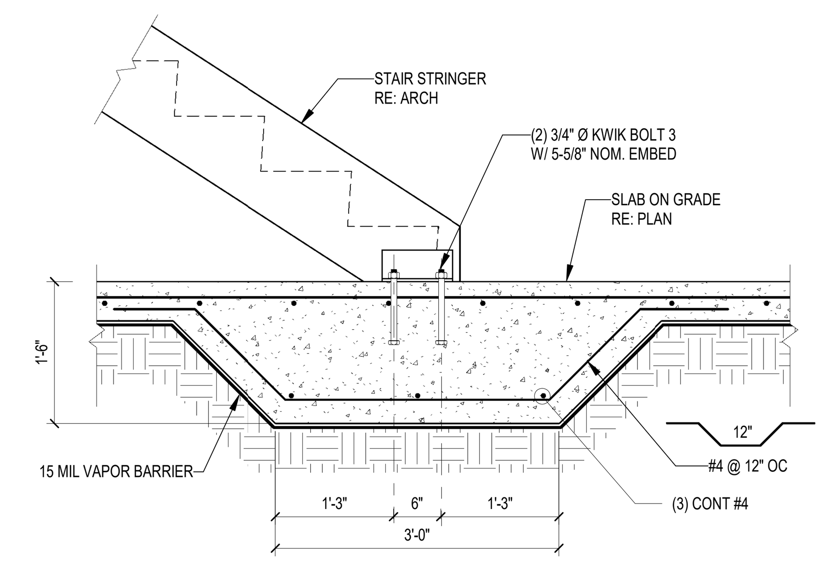

14 THICKENED SLAB AT STAIR STRINGER
3/4" = 1'-0"

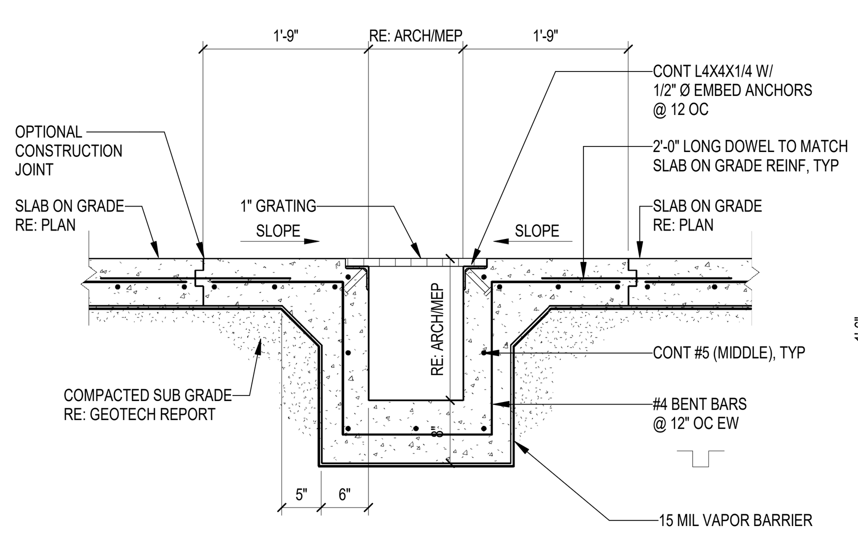

15 TYPICAL TRENCH DRAIN DETAIL
3/4" = 1'-0"

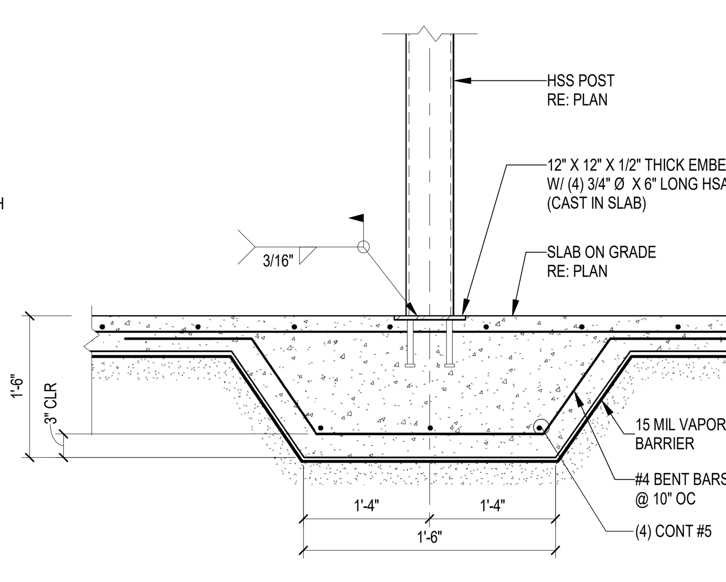

16 SECTION AT HSS POST
3/4" = 1'-0"

FSGROUP®
ARCHITECTS

16575 Village Drive
Houston Texas 77040
713 344 1752 PH
fsdesignbuild.com

PROJECT NAME

THE STATE OF TEXAS
FORT BEND COUNTY

INFORMATION TECHNOLOGY BUILDING
EUGENE HEIMANN CIRCLE
FORT BEND COUNTY . RICHMOND . TEXAS

CONSULTANTS

Dally + ASSOCIATES
STRUCTURAL | CIVIL

9800 Richmond Avenue, Suite 460
Houston, Texas 77042
1.713.337.8881
Texas Registered Engineering Firm
F-003426

PROFESSIONAL SEAL

STATE OF TEXAS
FRED DALLY
90904
05/15/2024

ISSUED FOR

ISSUED FOR PROPOSALS & PERMIT

REVISIONS

No.	DESCRIPTION	DATE

KEY PLAN

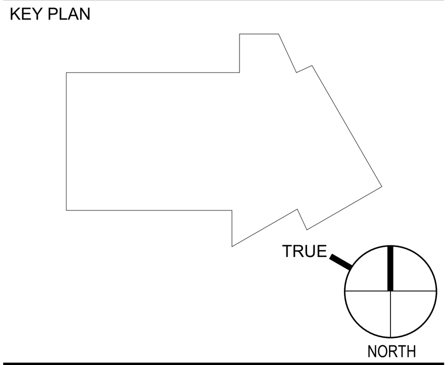

SHEET TITLE

TYPICAL FOUNDATION DETAILS

SCALE 3/4" = 1'-0"

DATE 05/15/24

PROJECT NUMBER 2319

SHEET NUMBER

S401

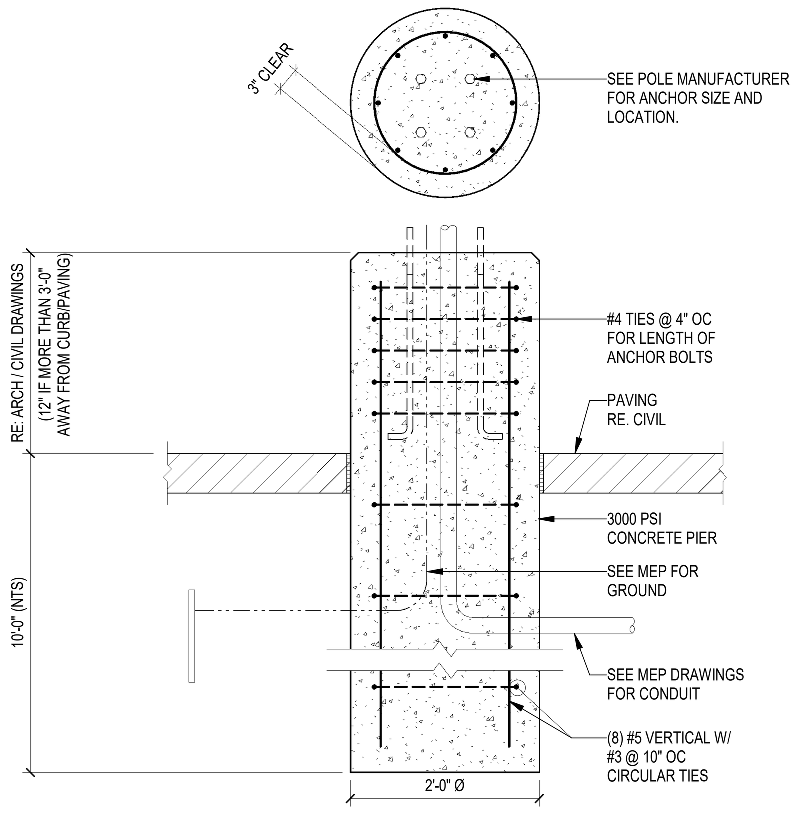

1 TYPICAL LIGHT POLE DETAIL (30'-0" TALL MAX)
3/4" = 1'-0"

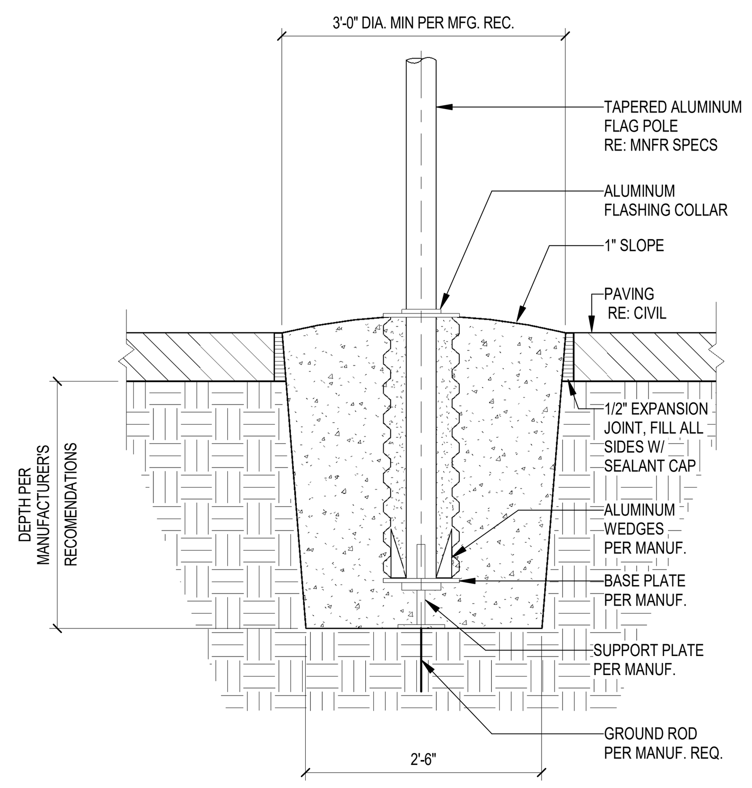

2 TYPICAL FLAG POLE DETAIL
3/4" = 1'-0"

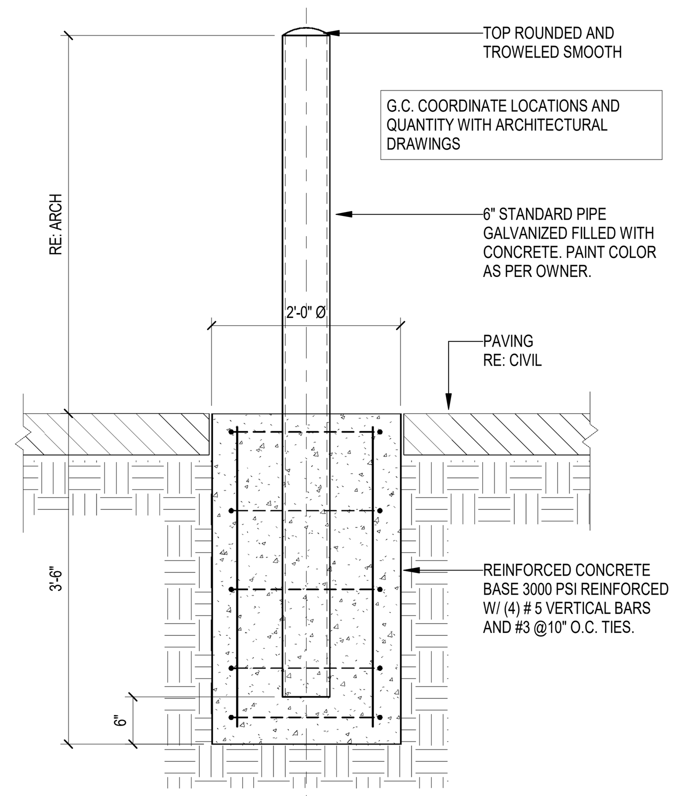

3 TYPICAL BOLLARD DETAIL
3/4" = 1'-0"

1. GENERAL CONTRACTOR TO COORDINATE WITH THE MECHANICAL DRAWINGS AND SPECIFICATIONS TO DETERMINE LOCATIONS OF HOUSEKEEPING PADS, AND TO PROVIDE WHERE REQUIRED, IF NON ARE SHOWN ON THE STRUCTURAL DRAWINGS.

2. COORDINATE ALL PAD DIMENSIONS, AND VERIFY ADEQUACY WITH THE MECHANICAL ENGINEER AND THE EQUIPMENT REQUIREMENTS.

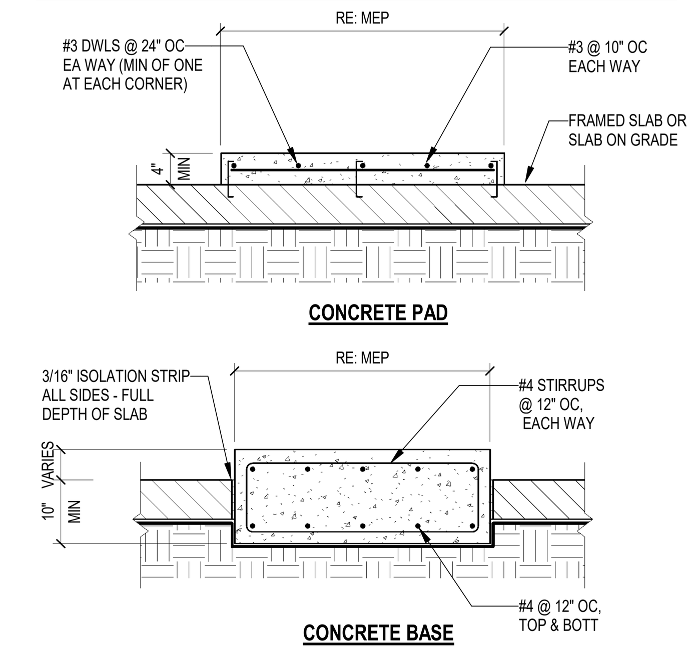

4 TYPICAL PAD BASE DETAIL
3/4" = 1'-0"

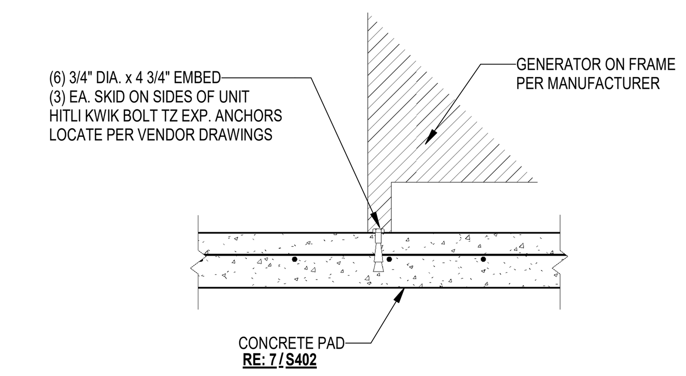

5 GENERATOR ANCHORAGE DETAIL
3/4" = 1'-0"

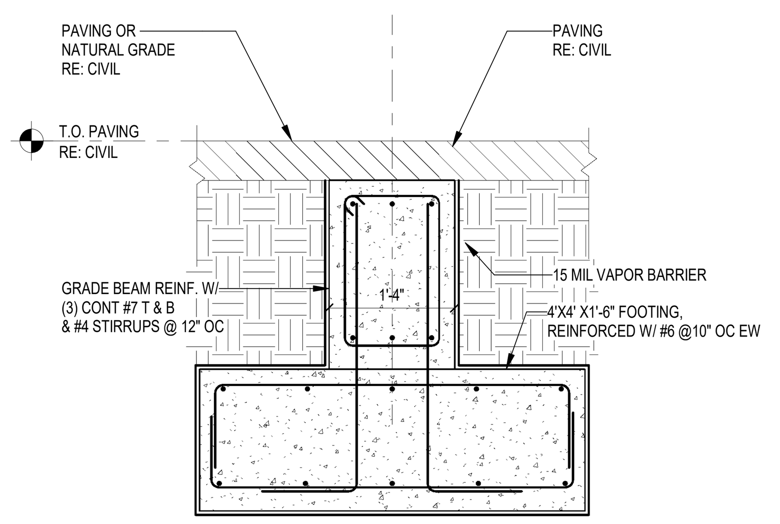

6 DUMPSTER ENCLOSURE FOUNDATION
3/4" = 1'-0"

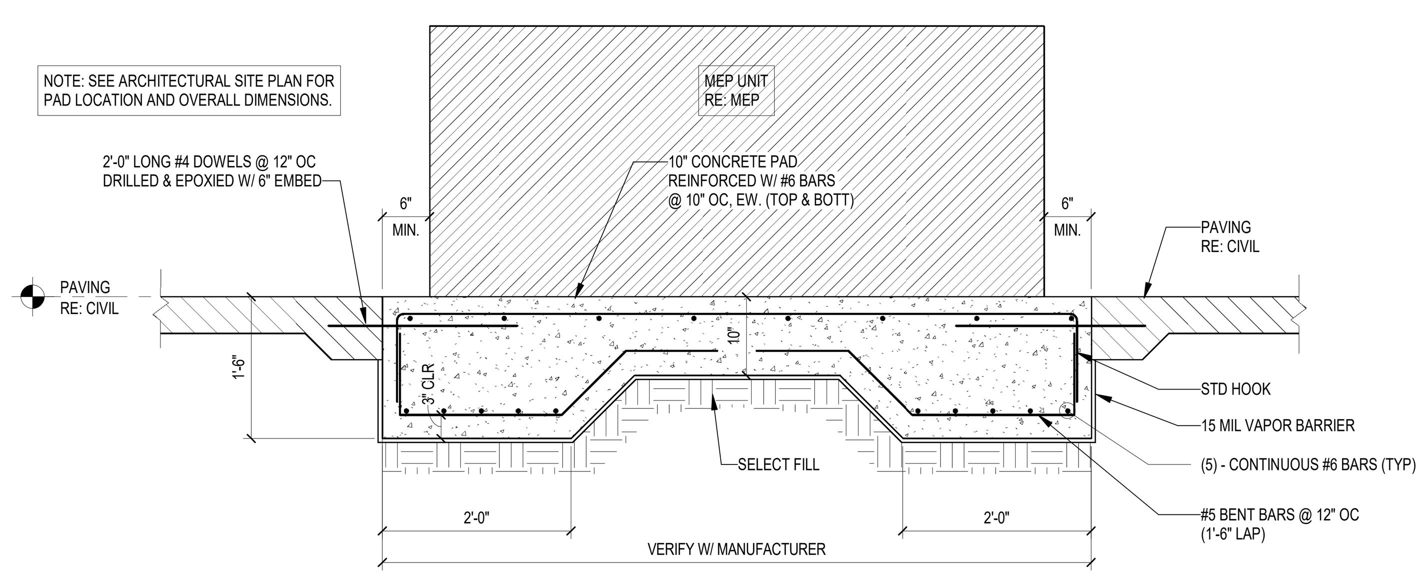

7 FOUNDATION AT MECHANICAL UNIT
3/4" = 1'-0"

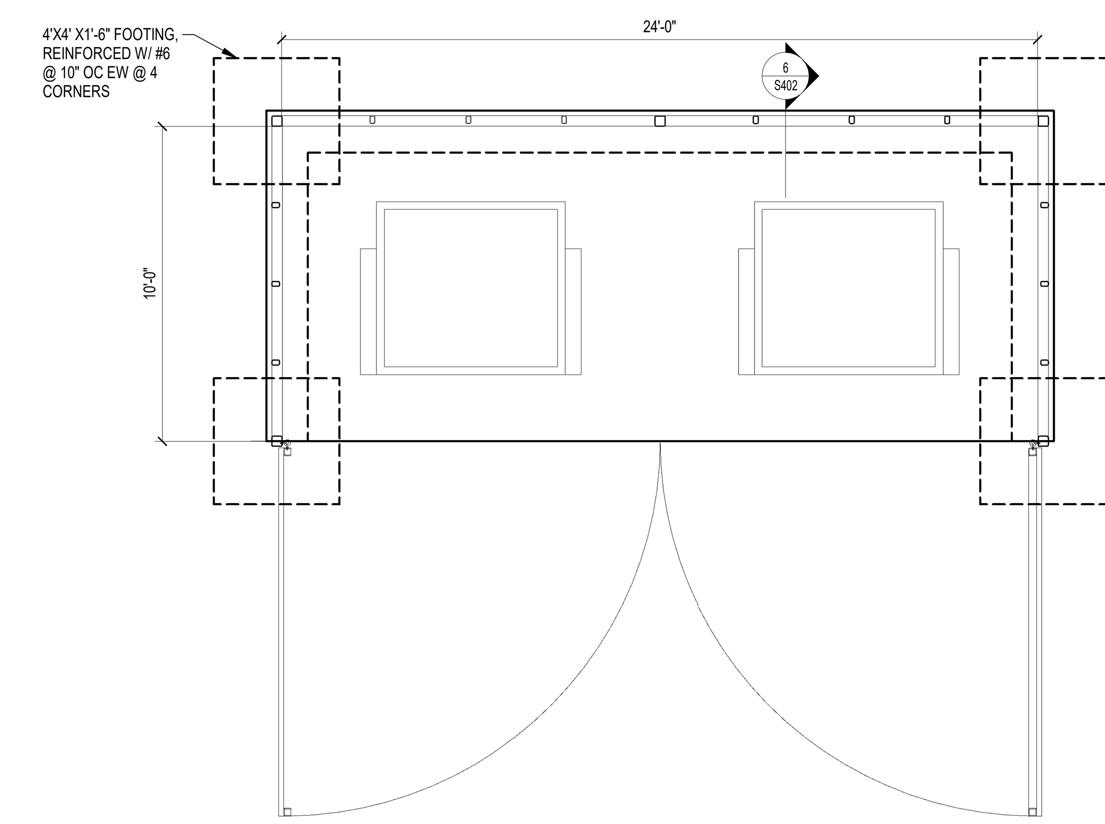

8 DUMPSTER ENCLOSURE
1/4" = 1'-0"

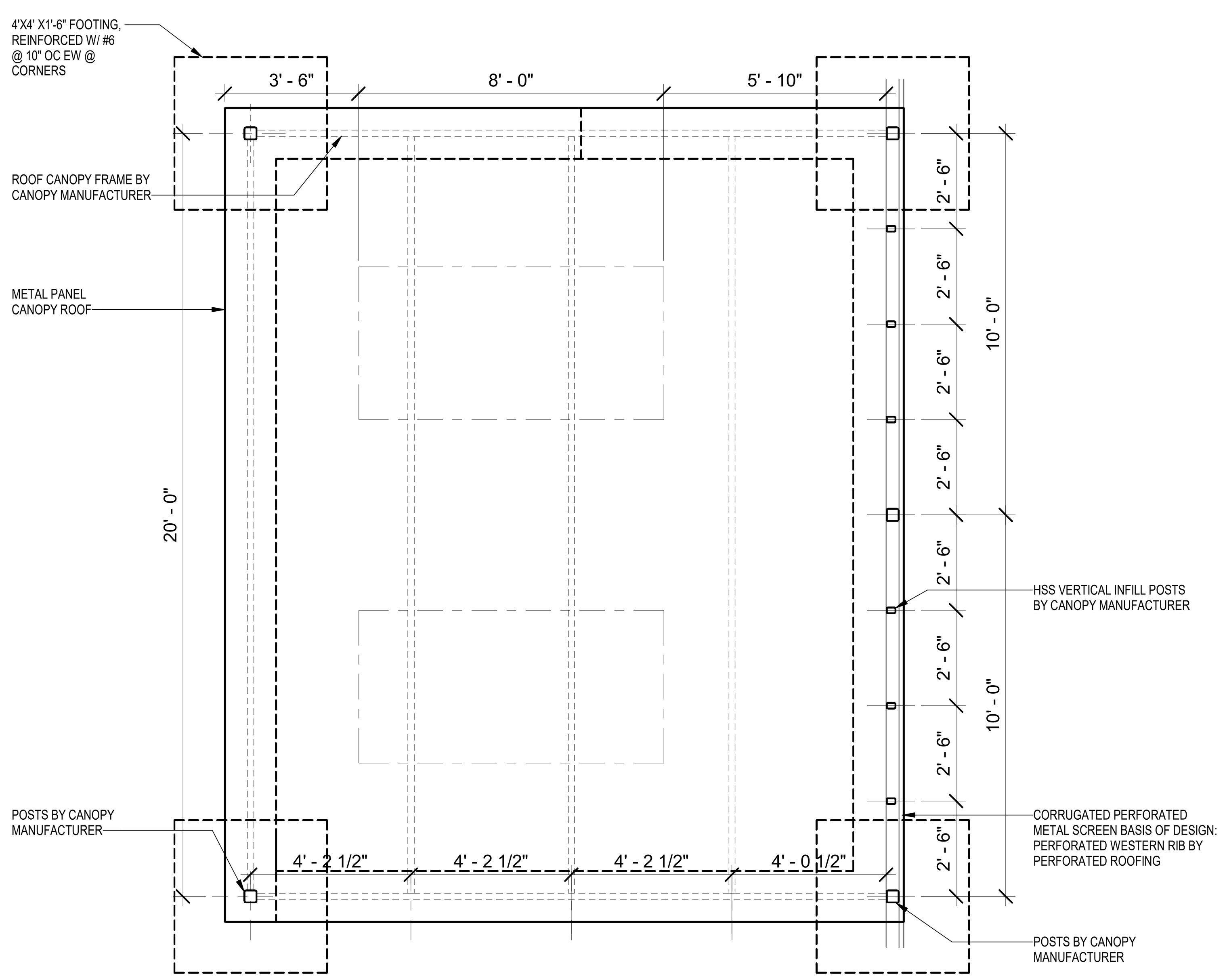

9 CANOPY FRAMING PLAN
3/8" = 1'-0"

FSGROUP ARCHITECTS
16575 Village Drive
Houston Texas 77040
713 344 1752 PH
fsdesignbuild.com

PROJECT NAME

THE STATE OF TEXAS — FORT BEND COUNTY

INFORMATION TECHNOLOGY BUILDING
EUGENE HEIMANN CIRCLE
FORT BEND COUNTY . RICHMOND . TEXAS

CONSULTANTS

Dally + ASSOCIATES
STRUCTURAL | CIVIL
9800 Richmond Avenue, Suite 460
Houston, Texas 77042
t 713 337 8881
Texas Registered Engineering Firm
F-003426

PROFESSIONAL SEAL

STATE OF TEXAS
FRED DALLY
90904
05/15/2024

ISSUED FOR

ISSUED FOR PROPOSALS & PERMIT

REVISIONS

No.	DESCRIPTION	DATE

KEY PLAN

TRUE NORTH

SHEET TITLE

TYPICAL SITE FOUNDATION DETAILS

SCALE
As indicated

DATE
05/15/24

PROJECT NUMBER
2319

SHEET NUMBER

S402

E D C B A

4 3 2 1

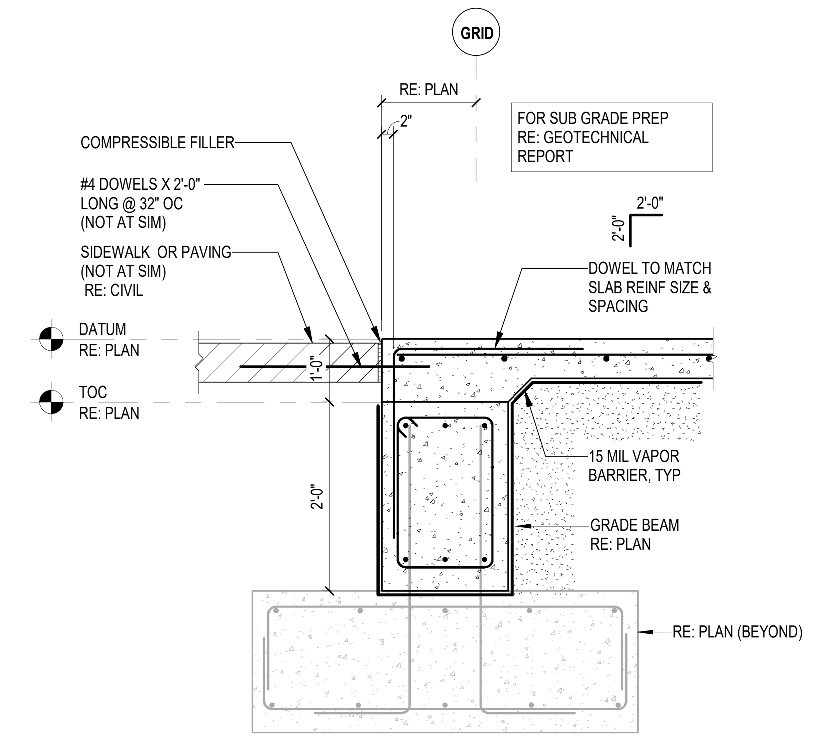

1 SECTION AT MAN DOOR
3/4" = 1'-0"

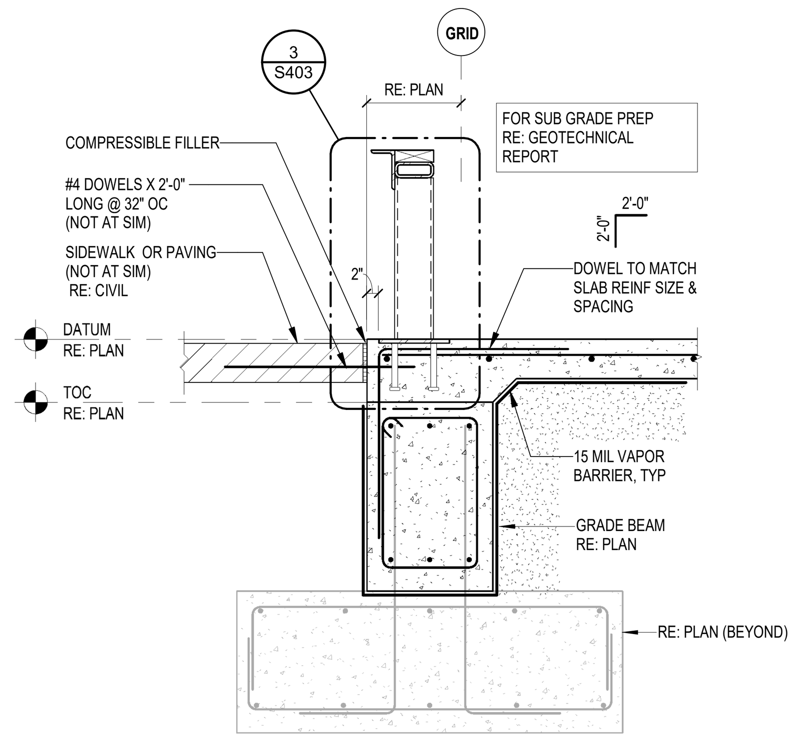

2 SECTION AT MAN DOOR
3/4" = 1'-0"

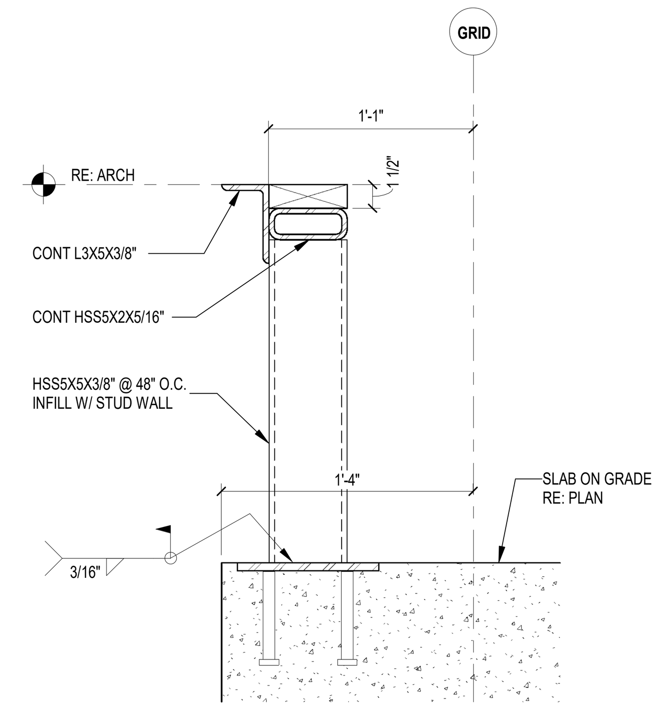

3 SECTION
1 1/2" = 1'-0"

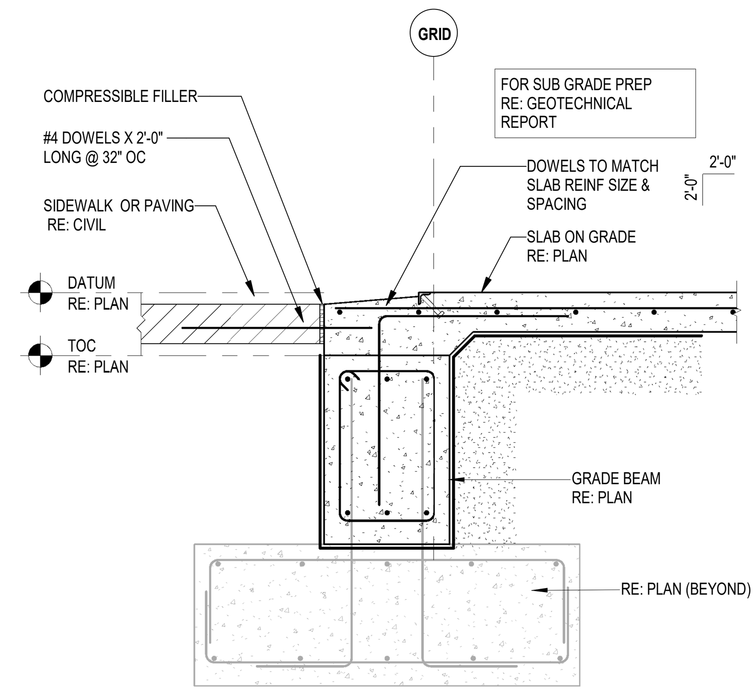

4 SECTION AT OVERHEAD DOOR
3/4" = 1'-0"

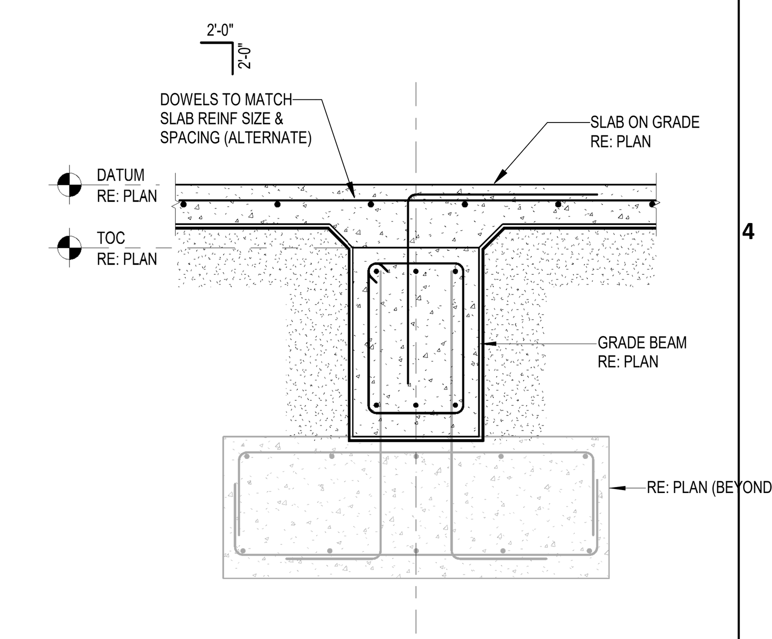

5 SECTION AT INTERIOR GRADE BEAM
3/4" = 1'-0"

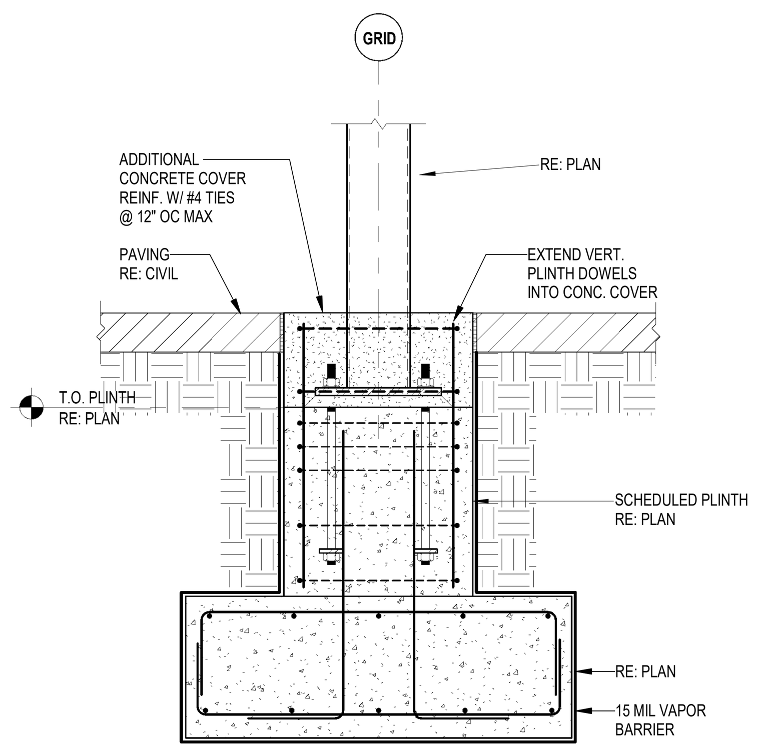

6 SECTION AT EXTERIOR COLUMN
3/4" = 1'-0"

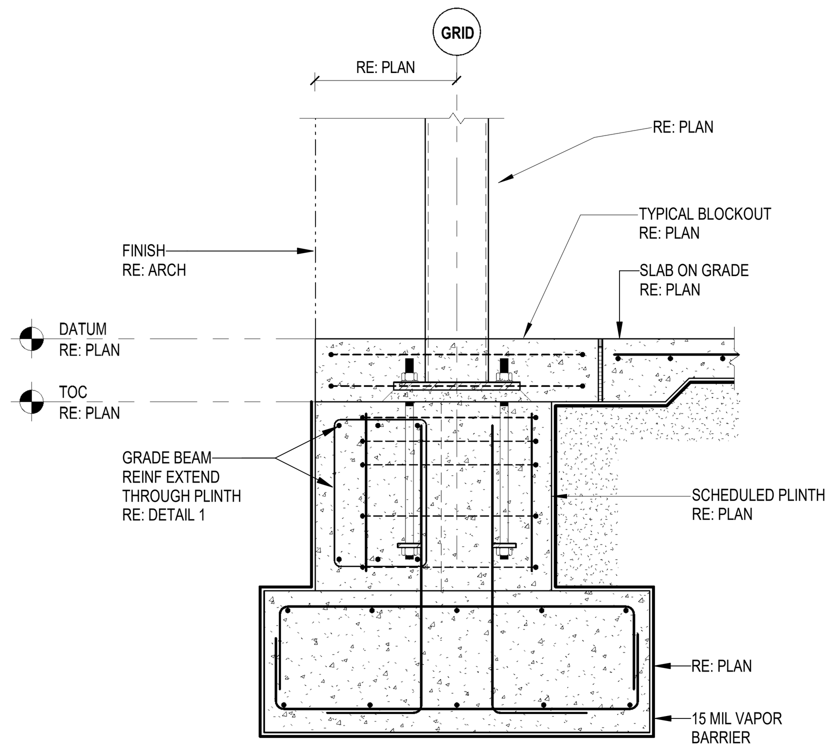

7 SECTION AT EXTERIOR COLUMN
3/4" = 1'-0"

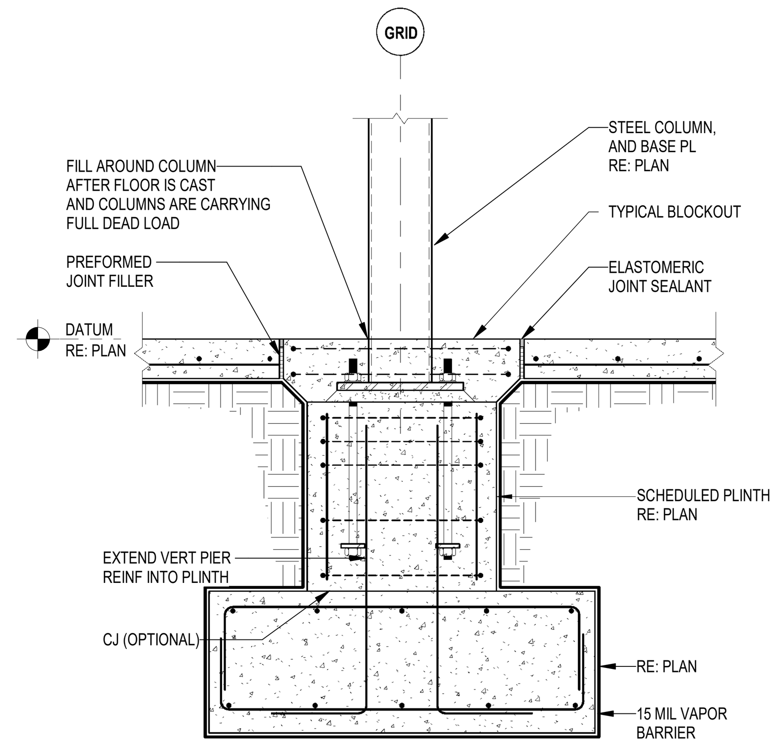

8 TYPICAL INTERIOR COLUMN SECTION
3/4" = 1'-0"

FSGROUP® ARCHITECTS
16575 Village Drive
Houston Texas 77040
713 344 1752 PH
fsdesignbuild.com

PROJECT NAME

INFORMATION TECHNOLOGY BUILDING
EUGENE HEIMANN CIRCLE
FORT BEND COUNTY . RICHMOND . TEXAS

CONSULTANTS

Dally + ASSOCIATES
STRUCTURAL | CIVIL
9800 Richmond Avenue, Suite 460
Houston, Texas 77042
t 713 337 8881
Texas Registered Engineering Firm
F-003426

PROFESSIONAL SEAL

FRED DALLY
90904
05/15/2024

ISSUED FOR
ISSUED FOR PROPOSALS & PERMIT

REVISIONS

No.	DESCRIPTION	DATE

KEY PLAN

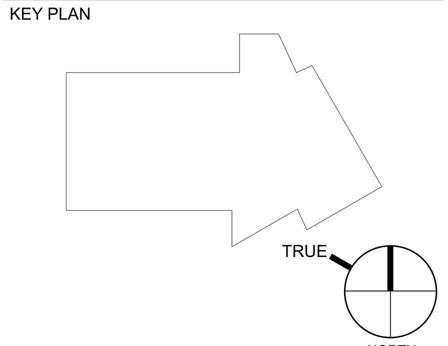

SHEET TITLE
FOUNDATION DETAILS

SCALE
As indicated

DATE
05/15/24

PROJECT NUMBER
2319

SHEET NUMBER
S403

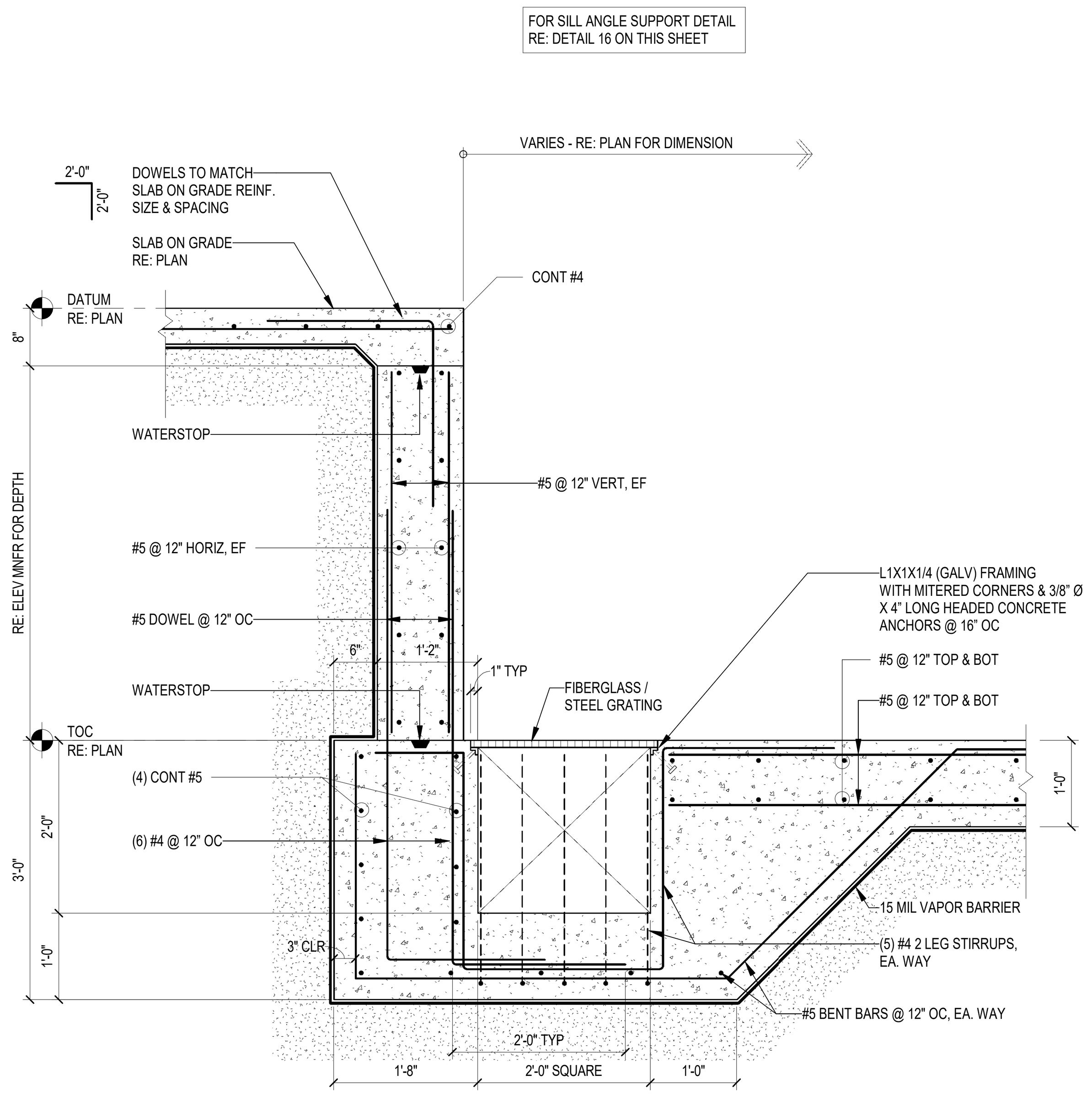

1 SUMP PIT DETAIL
3/4" = 1'-0"

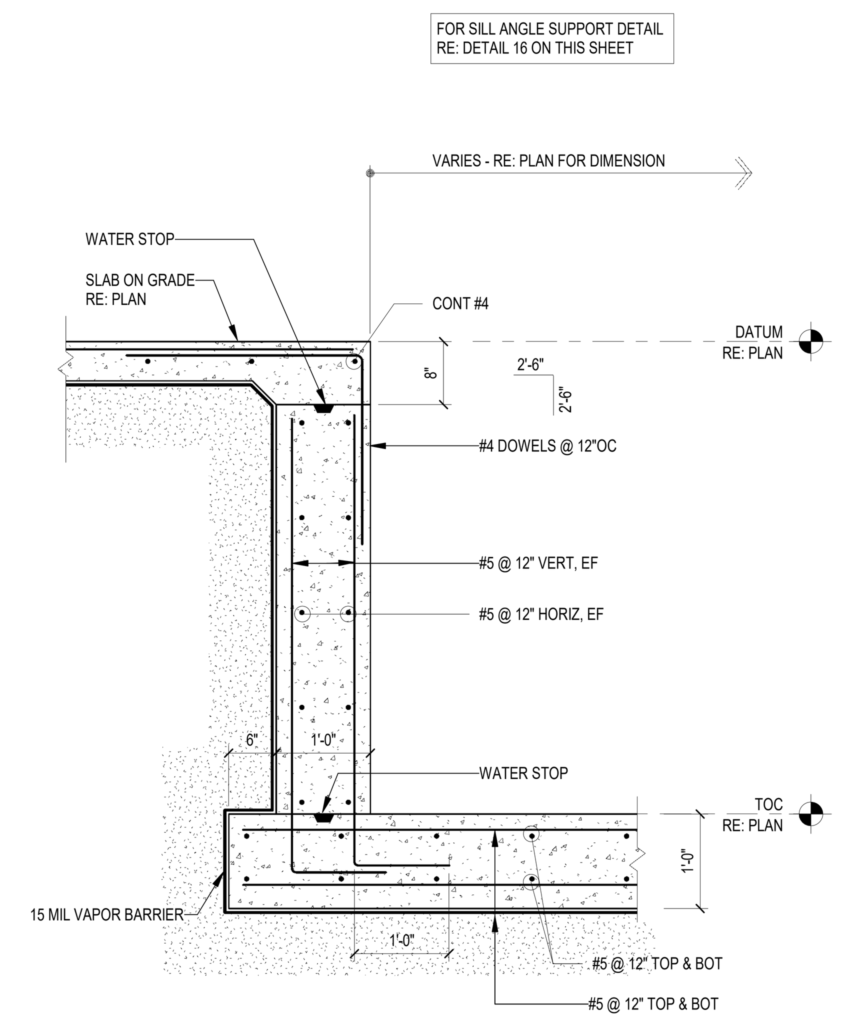

2 ELEVATOR PIT WALL DETAIL
3/4" = 1'-0"

FSGROUP® ARCHITECTS
16575 Village Drive
Houston Texas 77040
713 344 1752 PH
fsdesignbuild.com

PROJECT NAME

INFORMATION TECHNOLOGY BUILDING
EUGENE HEIMANN CIRCLE
FORT BEND COUNTY . RICHMOND . TEXAS

CONSULTANTS

Dally + ASSOCIATES
STRUCTURAL | CIVIL
9800 Richmond Avenue, Suite 460
Houston, Texas 77042
t 713 337 8881
Texas Registered Engineering Firm
F-003426

PROFESSIONAL SEAL

FRED DALLY
90904
05/15/2024

ISSUED FOR

ISSUED FOR PROPOSALS & PERMIT

REVISIONS

No.	DESCRIPTION	DATE

KEY PLAN

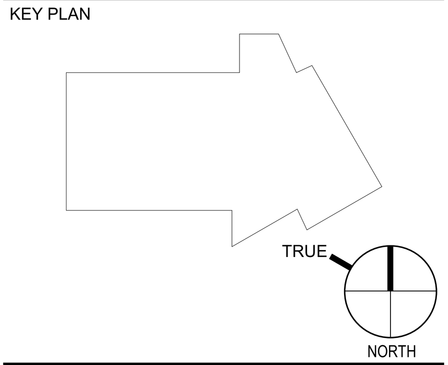

SHEET TITLE

FOUNDATION DETAILS

SCALE 3/4" = 1'-0"

DATE 05/15/24

PROJECT NUMBER 2319

SHEET NUMBER

S404

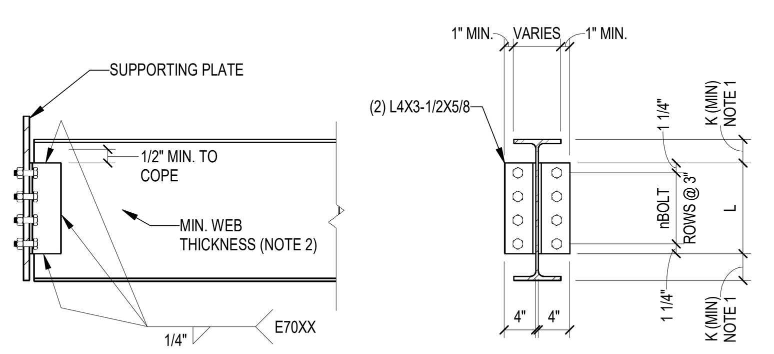

"n"	L (INCHES)	ALLOWABLE BOLT CAPACITY (KIPS)	ALLOWABLE WELD CAPACITY (KIPS)
2	5 1/2"	37	48
3	8 1/2"	56	77
4	11 1/2"	74	100
5	14 1/2"	93	122
6	17 1/2"	111	143
7	20 1/2"	130	160
8	23 1/2"	148	180
9	26 1/2"	167	198
10	29 1/2"	186	215

NOTES:

1. REFER TO AISC - MANUAL OF STEEL CONSTRUCTION (SECTION 1).

2. ALLOWABLE WELD CAPACITY IS BASED UPON A BEAM WEB THICKNESS OF 1/2" FOR A36 MATERIAL AND 3/8" FOR ASTM A572, GRADE 50 MATERIAL. REDUCE THIS CAPACITY PROPORTIONALLY FOR A LESSER WEB THICKNESS.

3. THE SUPPORTING PLATE CAPACITY SHALL BE BASED UPON AN ALLOWABLE LOAD PER BOLT OF 65 KIPS PER INCH OF PLATE THICKNESS FOR A36 MATERIAL OR 73 KIPS PER INCH OF PLATE THICKNESS FOR ASTM A572, GRADE 50 MATERIAL. FOR BEAM CONNECTIONS ON TWO SIDES, THE SUM OF THE LOADS PER BOLT SHALL BE CONSIDERED.

4. FOR COPED BEAM CONNECTIONS, THE CAPACITY OF THE NET SHEAR AREA OF THE WEB SHALL BE VERIFIED.

5. THE CAPACITY OF THE CONNECTION SHALL BE THE LESSER VALUE OF THE ALLOWABLE BOLT CAPACITY, ALLOWABLE WELD CAPACITY, SUPPORTING PLATE CAPACITY OR THE WEB NET SHEAR AREA CAPACITY.

6. THE MINIMUM NUMBER OF ROWS OF BOLTS SHALL BE AS FOLLOWS:

W10 & W12	2 ROWS
W14 & W16	3 ROWS
W18, W21, & W24	4 ROWS
W27 & W30	5 ROWS
W33 & W36	6 ROWS

3/4" Ø A325 BOLTS - BEARING CONN. - STANDARD HOLES

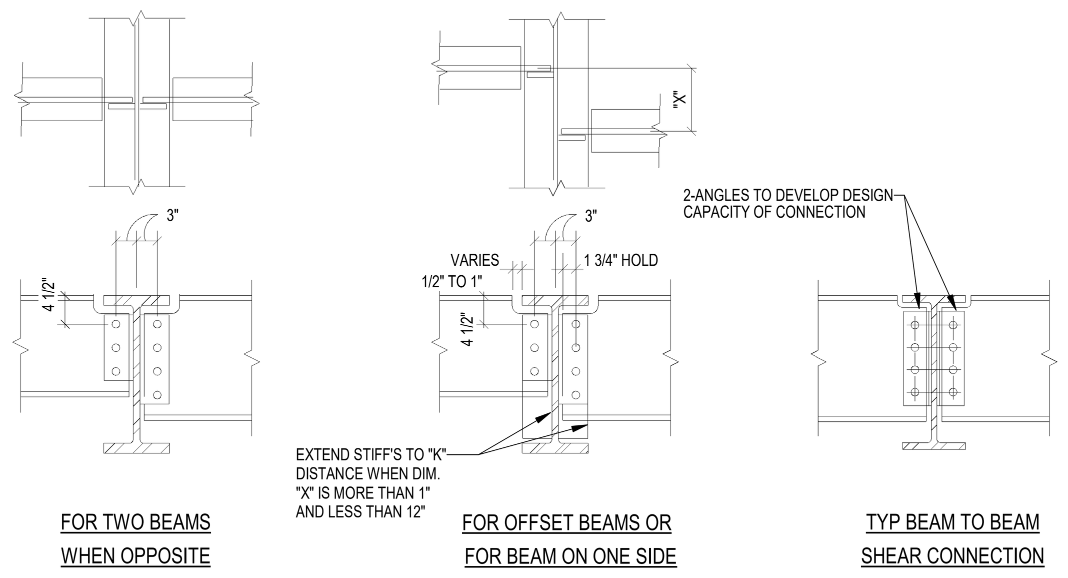

NOTES:-
1. BOTH THE WELDS & THE BOLTS TO BE DESIGNED FOR MOMENT CAUSED BY ECCENTRICITY BETWEEN WELD GROUP & BOLT CENTERLINE.
2. END REACTION TO BE DETERMINED PER GENERAL NOTES SHEET OR AS SHOWN ON PLANS.

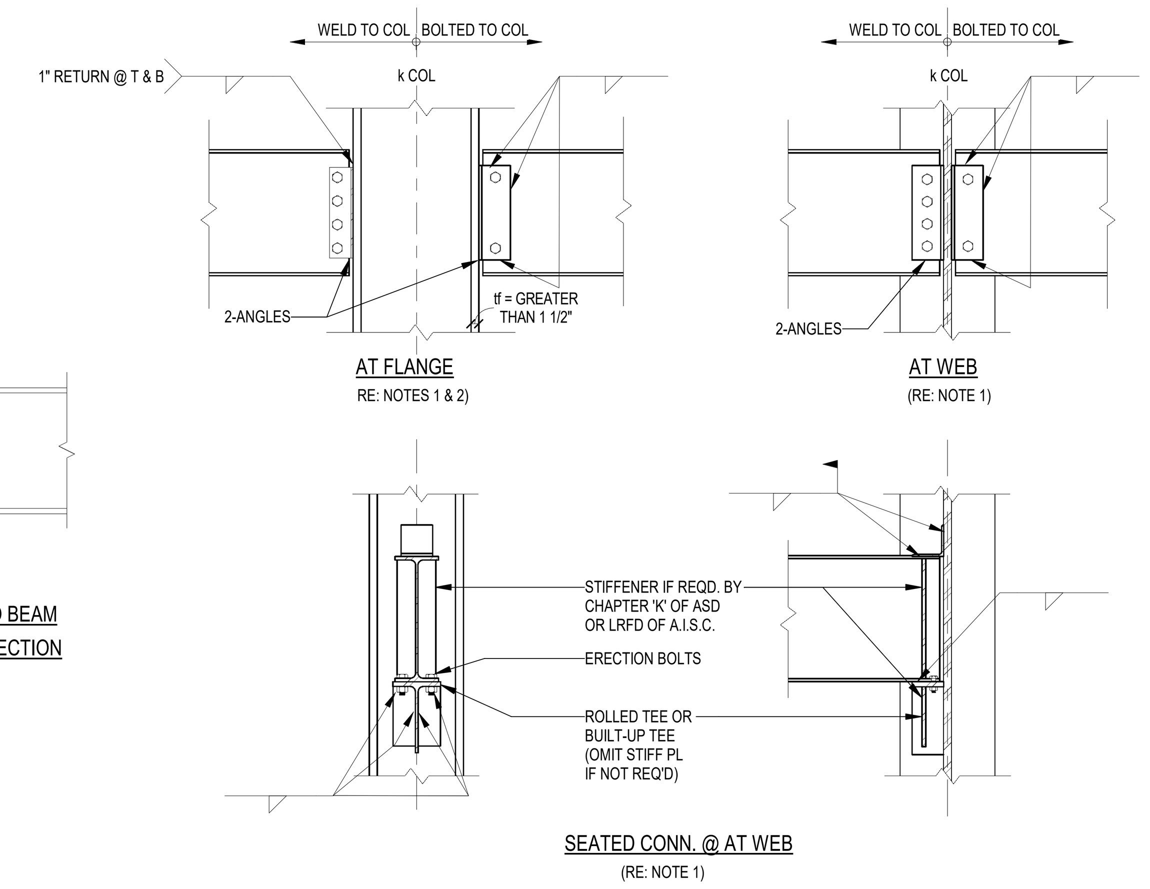

NOTES:

1. CONN. TO BE ADEQUATE FOR AXIAL BRACING FORCE = 1% OF WORKING COLUMN LOAD IN ADDITION TO END REACTION DETERMINED PER STEEL GENERAL NOTES SHEET (U.N.O. ON DWG.) ALLOWABLE STRESS CAN BE INCREASED 1/3 FOR THIS CONDITION. COLUMN LOAD WILL BE FURNISHED OR CAN BE DETERMINED FROM AISC MANUAL FOR FLOOR TO FLOOR HEIGHT.

2. SINGLE PLATE CONNECTION IS ALLOWED ONLY WHEN AXIAL FORCE BRACING THE COLUMN IS LESS THAN 20 KIPS. THE DESIGN OF SINGLE PLATE CONNECTION WITH AXIAL FORCE LESS THAN 20 KIPS. SHOULD BE SUBSTANTIATED BY CALCULATION AND IS SUBJECT TO ENGINEER'S APPROVAL.

3/4" Ø A325 BOLTS - BEARING CONN. - STANDARD HOLES

1 STANDARD BEAM CONNECTION
3/4" = 1'-0"

2 BEAM CONNECTION DETAILS
3/4" = 1'-0"

3 TYPICAL BEAM TO COLUMN CONN. @ FLANGE & WEB
N.T.S.

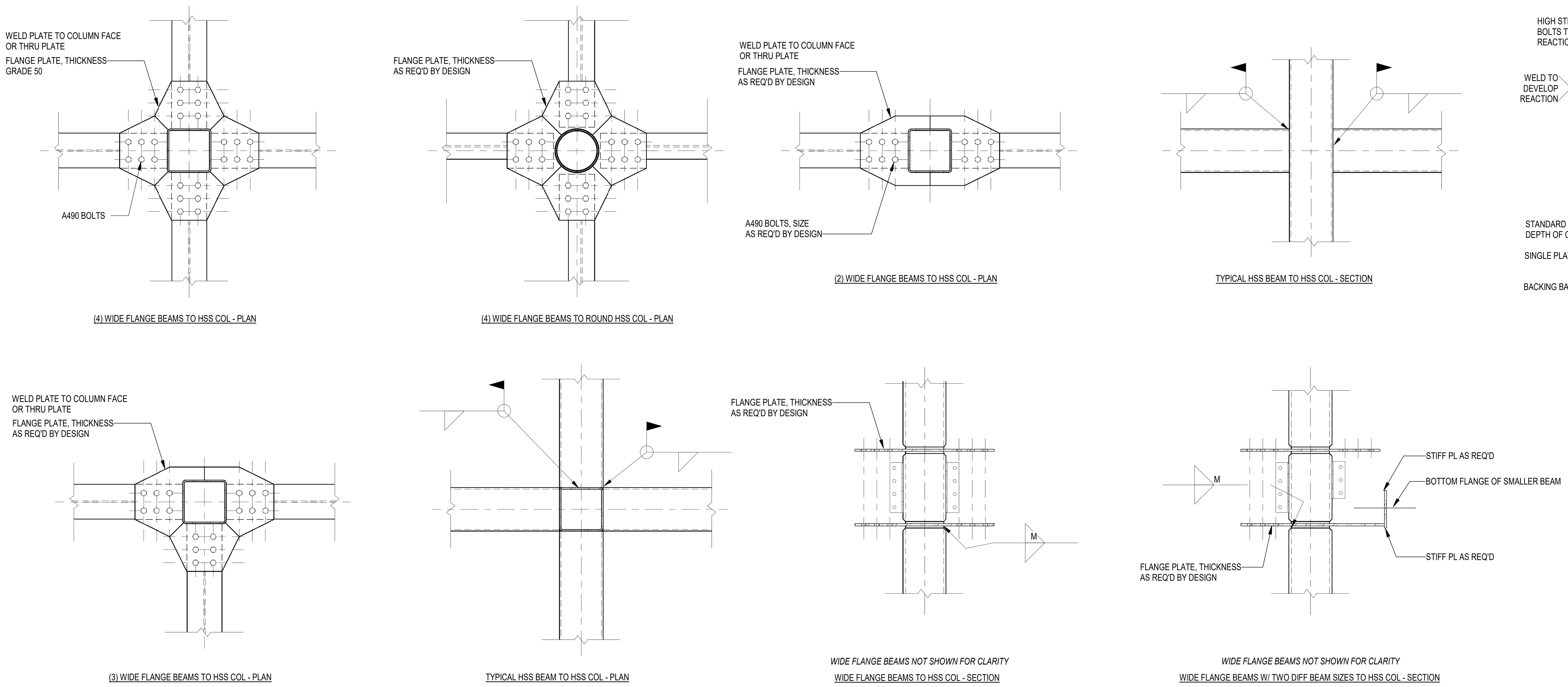

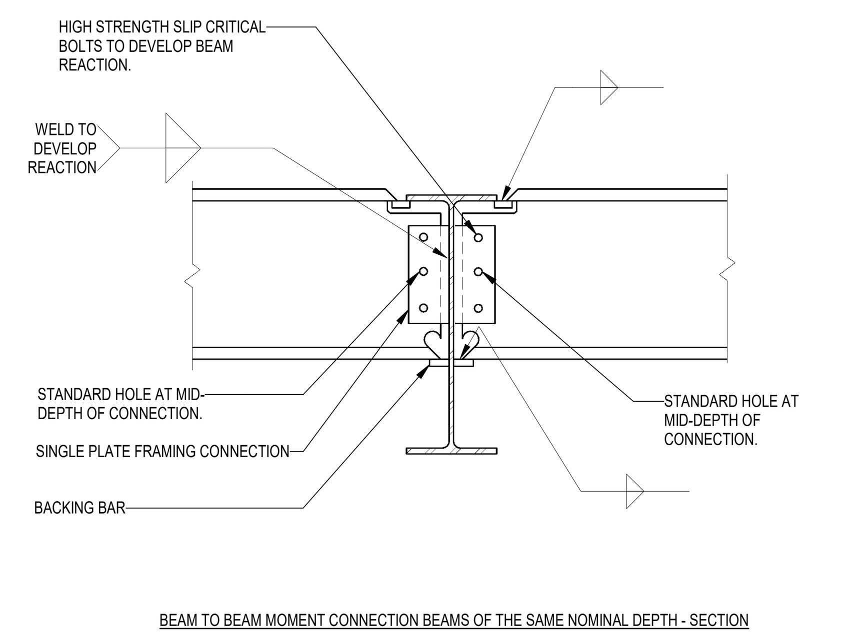

NOTES:

1. BOLTS IN WEB CONNECTION SHALL BE SNUG TIGHTENED PRIOR TO WELDING OF FLANGES.

2. SLIP-CRITICAL BOLTED CONNECTION IN WEB USING A325 BOLTS IN HORIZONTAL SHORT-SLOTTED HOLES U.N.O. RESISTANCE BY BOLTS TO SHEAR SHALL BE BY FRICTION, PROPORTIONED USING THE STANDARD HOLE VALUE ON A CLASS "A" SURFACE.

3. REFER TO SPECIFICATIONS FOR CONNECTION DESIGN CRITERIA.

4. PROVIDE PREDESIGNED SHEAR CONNECTIONS AS SHOWN IN AISC LRFD MANUAL WHERE APPLICABLE.

5. IF MOMENT IS SHOWN ON DRAWINGS, PARTIAL PENETRATION WELD TO DEVELOP MOMENT CAN BE USED IN LIEU OF CJP WELD. FOR THIS CASE, WELD SHALL BE REQUIRED TO DEVELOP THE BEAM FLANGE
FORCE COMPUTED AS FOLLOWS: Pu = (Mu)/(0.95D).
WHERE: Mu = DESIGN MOMENT (KIP-IN).
D = BEAM DEPTH (INCHES).
Pu = BEAM FLANGE FORCE (KIPS).

6. ALL MOMENT CONNECTIONS DETAILS SHOWN IN THIS SHEET ARE FOR REFERENCE ONLY TO SHOW THE INTENT OF THE DESIGN. STEEL FABRICATOR TO DETERMINE/DESIGN ALL REQUIRED BOLTING, PLATES WELDING TO REINFORCE BEAMS AND COLUMNS AS NEEDED TO ACHIEVE 100% BEAM CAPACITY AND PROVIDE SIGNED SEALED CALCULATIONS BY LICENSED ENGINEER IN STATE OF TEXAS TO EOR FOR REVIEW.

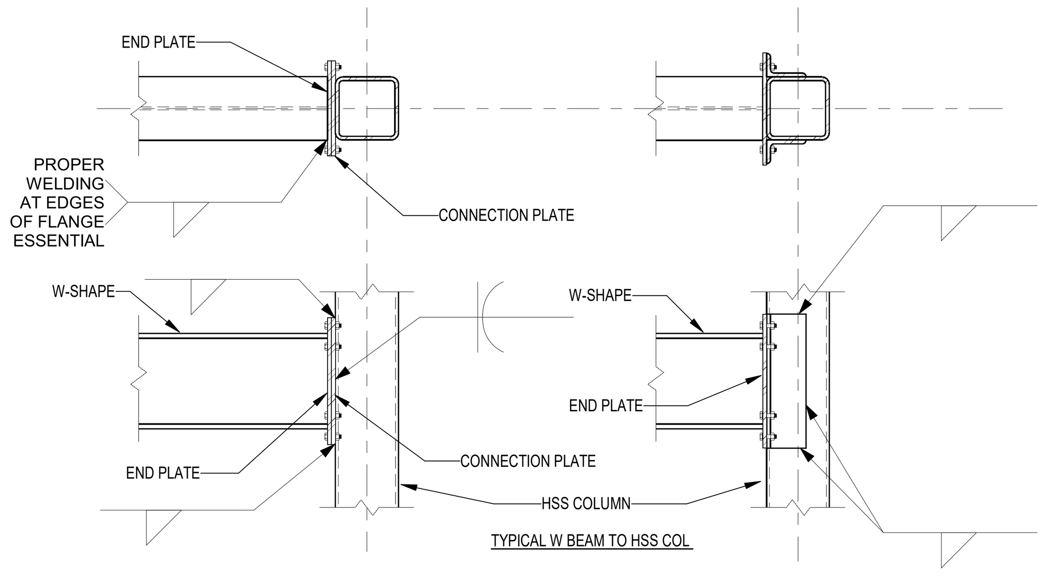

4 MOMENT CONNECTION DETAILS AT HSS COLUMNS
3/4" = 1'-0"

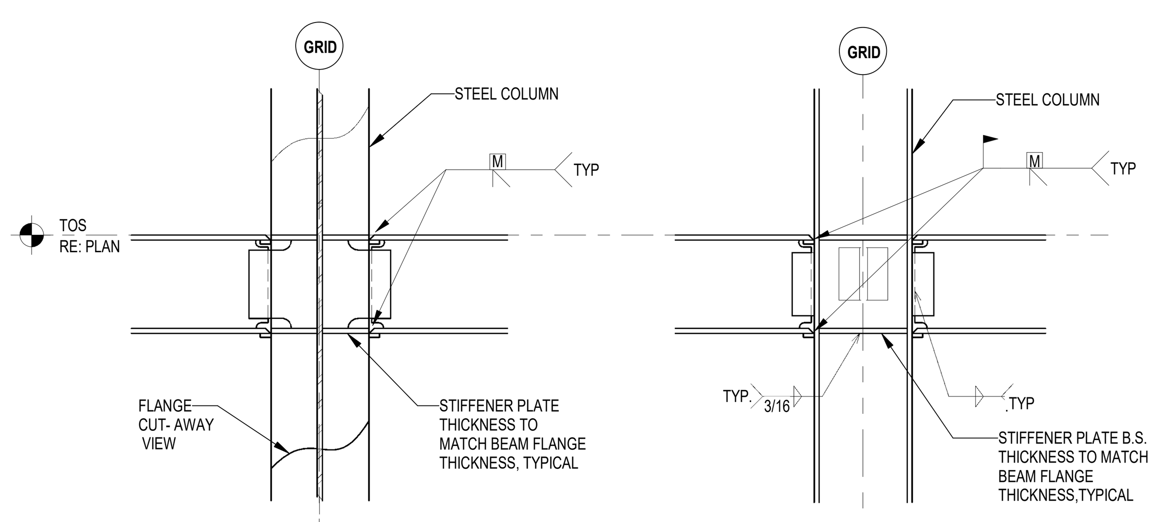

5 TYPICAL MOMENT CONN. AT WIDE FLANGE COLUMNS
1/2" = 1'-0"

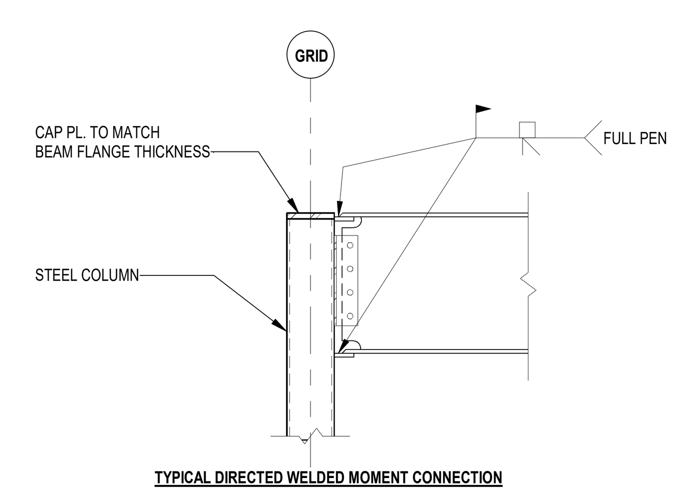

6 TYPICAL DIRECT WILDED MOMENT CONN.
3/4" = 1'-0"

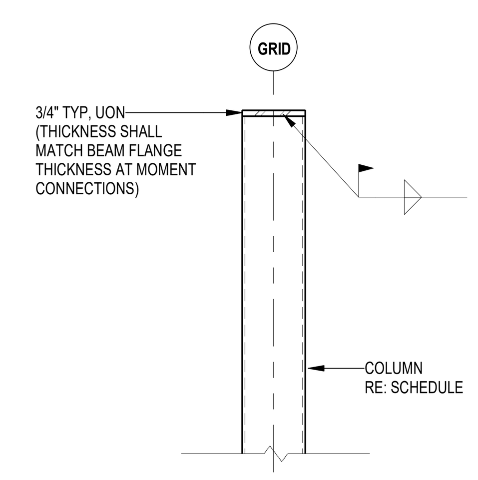

7 TYPICAL COLUMN CAP PLATE
3/4" = 1'-0"

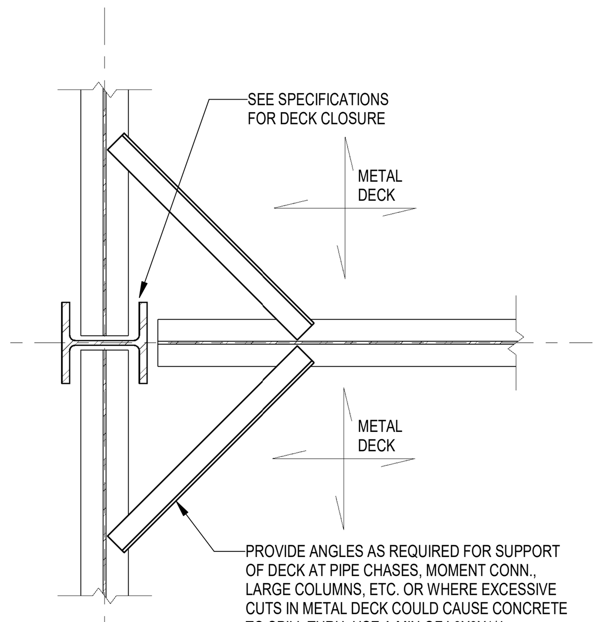

8 METAL DECK SUPPORT AT COLUMN
3/4" = 1'-0"

FSGROUP ARCHITECTS
16575 Village Drive
Houston Texas 77040
713 344 1752 PH
fsdesignbuild.com

PROJECT NAME

INFORMATION TECHNOLOGY BUILDING
EUGENE HEIMANN CIRCLE
FORT BEND COUNTY . RICHMOND . TEXAS

CONSULTANTS

Dally + ASSOCIATES
STRUCTURAL | CIVIL
9800 Richmond Avenue, Suite 460
Houston, Texas 77042
t 713 337 8881
Texas Registered Engineering Firm
F-003426

PROFESSIONAL SEAL

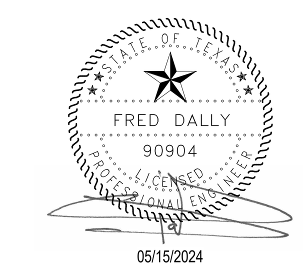

ISSUED FOR
ISSUED FOR PROPOSALS & PERMIT

REVISIONS

No.	DESCRIPTION	DATE

KEY PLAN

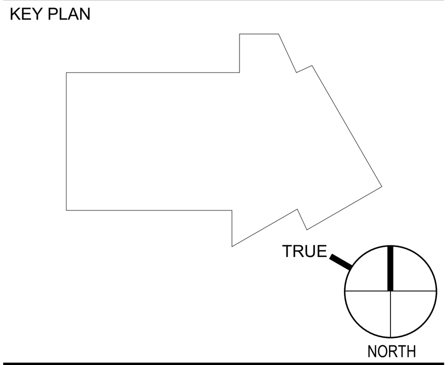

SHEET TITLE
TYPICAL FRAMING DETAILS

SCALE
As indicated

DATE
05/15/24

PROJECT NUMBER
2319

SHEET NUMBER
S501

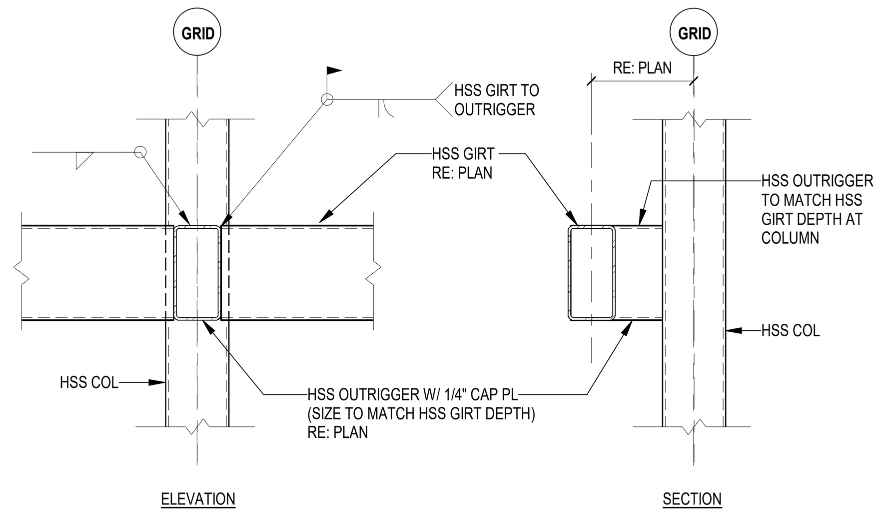

NOTES:
1. THIS DETAIL TO BE USED WHERE THE HSS BEAM CLEARS THE SIDE OF COLUMN.

1 TYPICAL OFFSET HSS TUBE SUPPORT
3/4" = 1'-0"

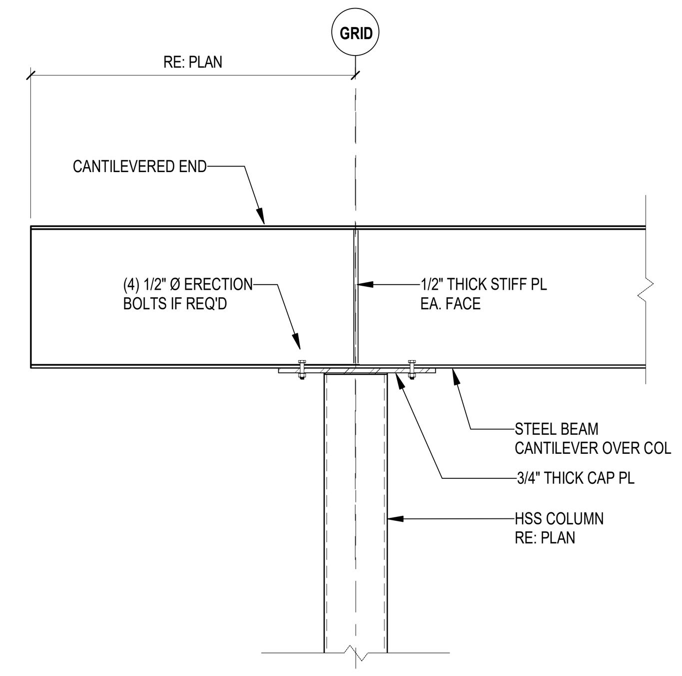

2 TYPICAL CANTILEVERED BEAM
3/4" = 1'-0"

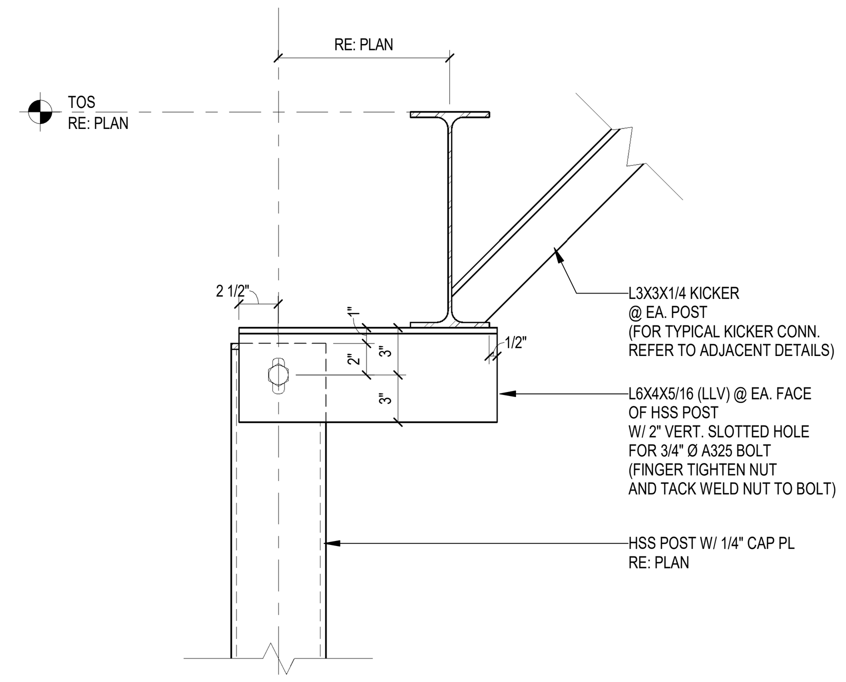

3 TYPICAL HSS POST SLIP CONNECTION
1 1/2" = 1'-0"

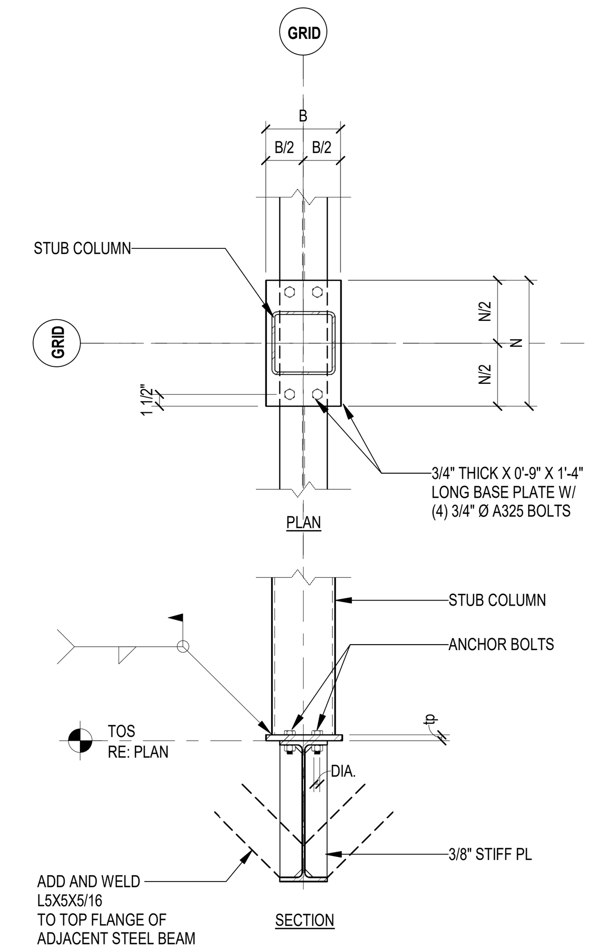

4 TYPICAL STUB COLUMN DETAIL
3/4" = 1'-0"

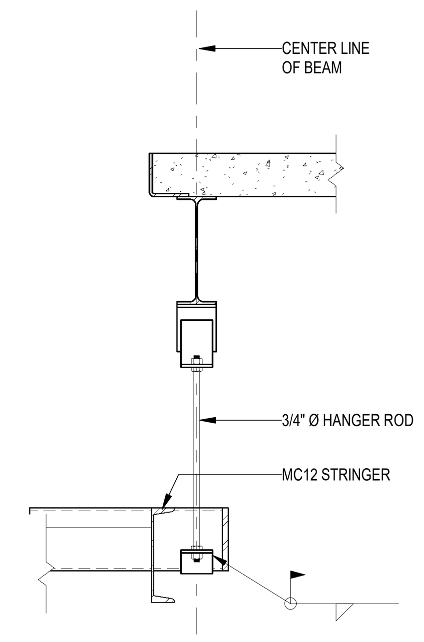

5 TYPICAL STAIR HANGER
N.T.S.

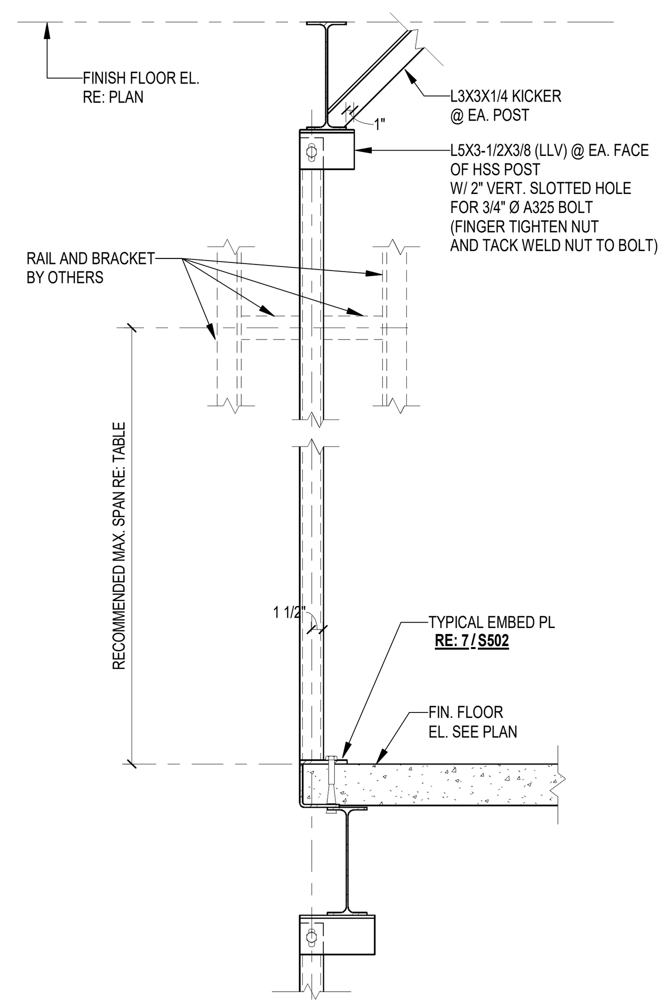

6 TYPICAL GUIDE RAIL DETAIL
3/4" = 1'-0"

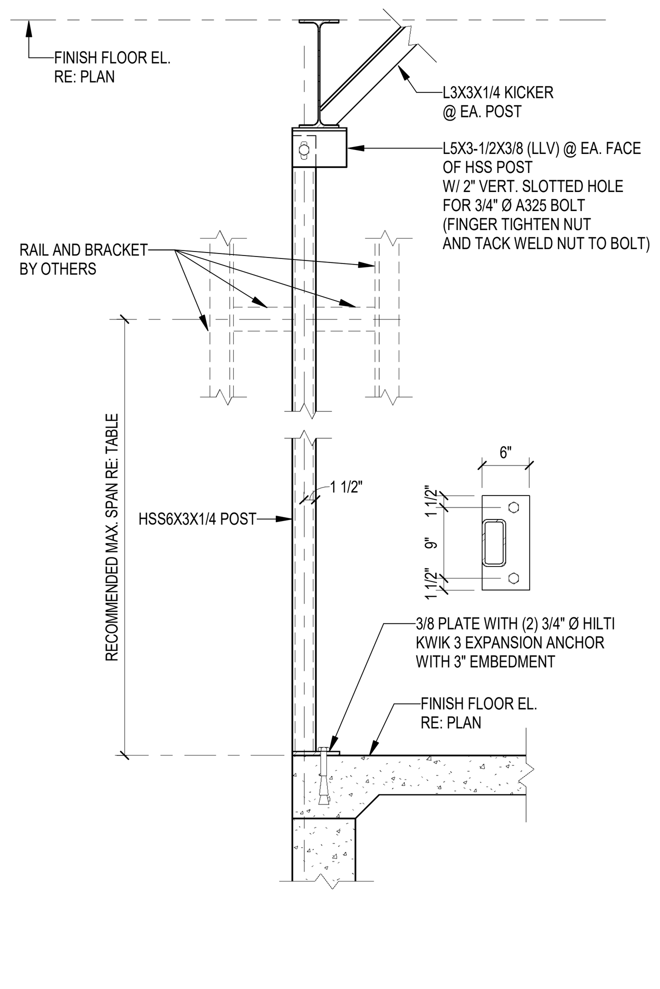

7 TYPICAL GUIDE RAIL DETAIL
3/4" = 1'-0"

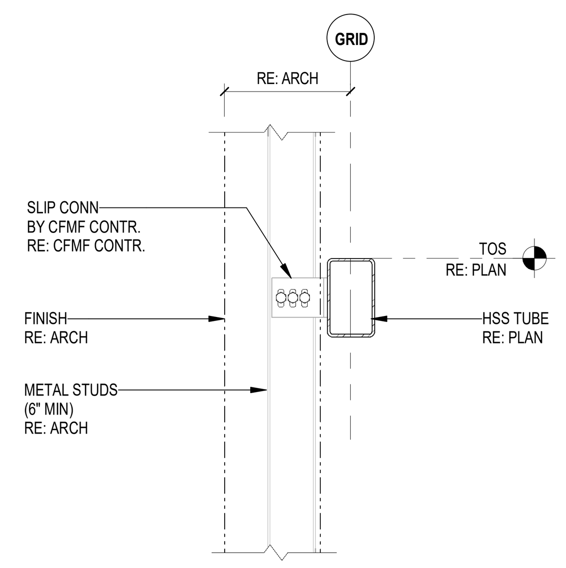

8 TYP MID SPAN CFMF SUPPORT
3/4" = 1'-0"

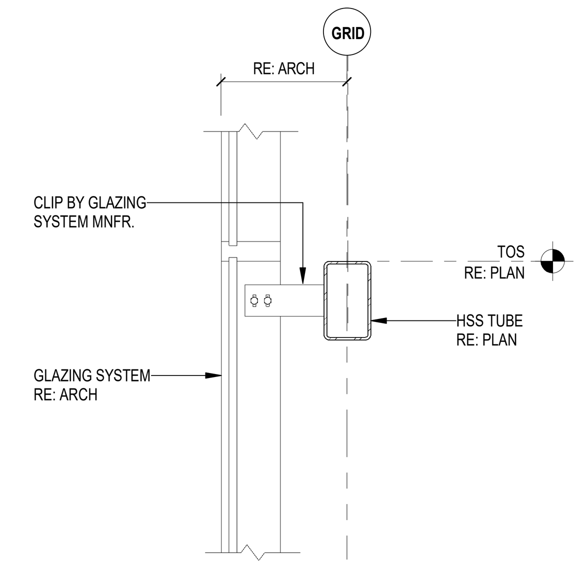

9 TYP MID SPAN GLAZING SUPPORT
3/4" = 1'-0"

FSGROUP ARCHITECTS
16575 Village Drive
Houston Texas 77040
713 344 1752 PH
fsdesignbuild.com

PROJECT NAME

INFORMATION TECHNOLOGY BUILDING
EUGENE HEIMANN CIRCLE
FORT BEND COUNTY . RICHMOND . TEXAS

CONSULTANTS

Dally + ASSOCIATES
STRUCTURAL | CIVIL
9800 Richmond Avenue, Suite 460
Houston, Texas 77042
1 713 337 8881
Texas Registered Engineering Firm
F-003426

PROFESSIONAL SEAL

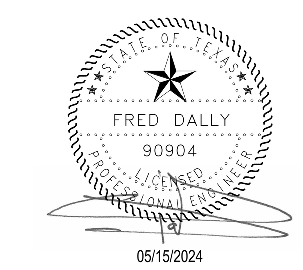

ISSUED FOR

ISSUED FOR PROPOSALS & PERMIT

REVISIONS

No.	DESCRIPTION	DATE

KEY PLAN

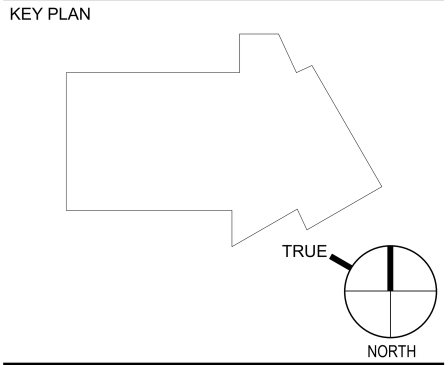

SHEET TITLE

TYPICAL FRAMING DETAILS

SCALE: As indicated

DATE: 05/15/24

PROJECT NUMBER: 2319

SHEET NUMBER

S502

FIN. STUD LENGTH	SLAB THICKNESS 't'
8"	't' > 10"
5 1/2"	6 1/2" < 't' < 10"
5"	6" < 't' < 6 1/2"
4 1/2"	5 1/4" < 't' < 6"

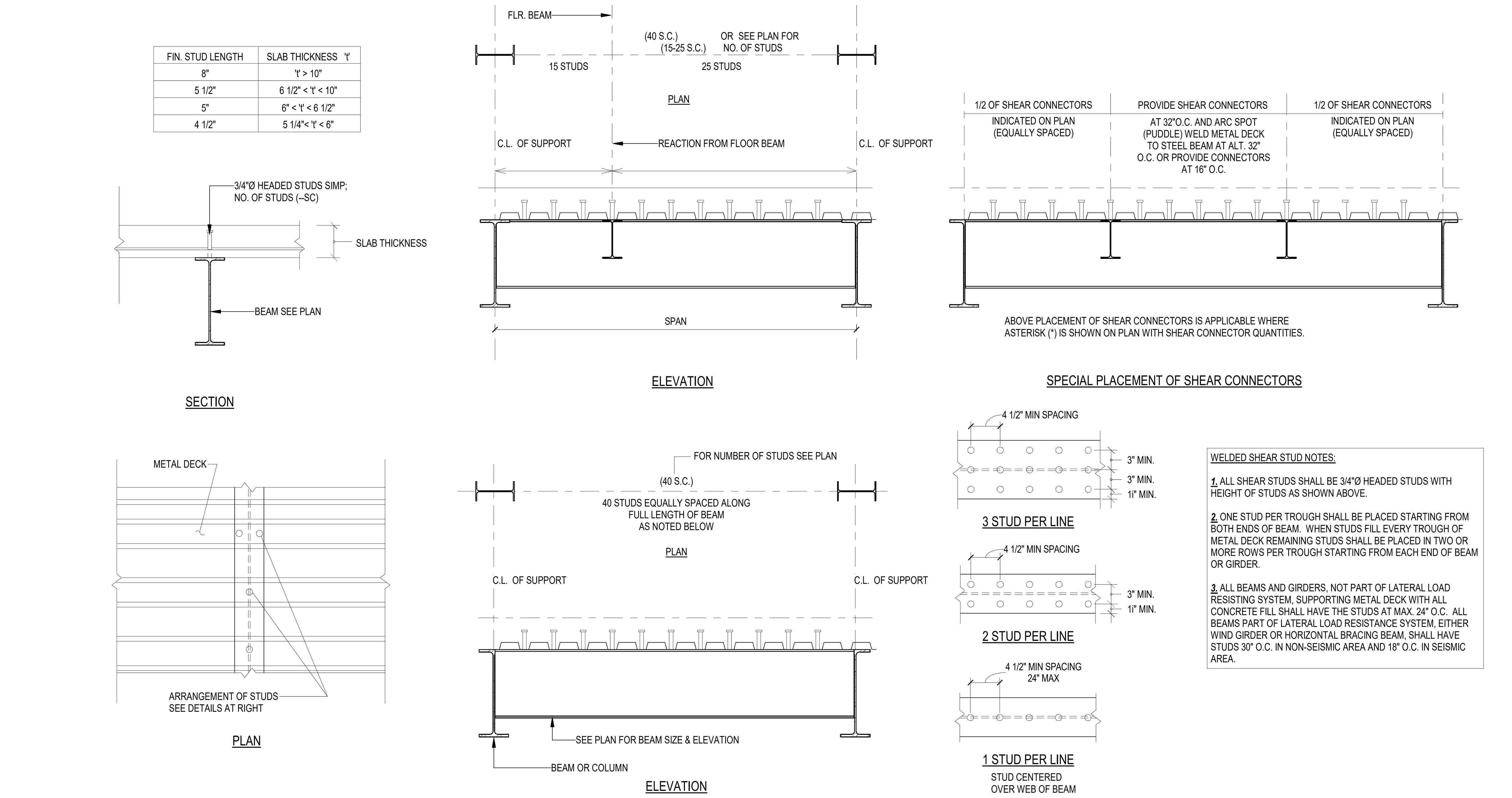

WELDED SHEAR STUD NOTES:

1. ALL SHEAR STUDS SHALL BE 3/4"Ø HEADED STUDS WITH HEIGHT OF STUDS AS SHOWN ABOVE.

2. ONE STUD PER TROUGH SHALL BE PLACED STARTING FROM BOTH ENDS OF BEAM. WHEN STUDS FILL EVERY TROUGH OF METAL DECK REMAINING STUDS SHALL BE PLACED IN TWO OR MORE ROWS PER TROUGH STARTING FROM EACH END OF BEAM OR GIRDER.

3. ALL BEAMS AND GIRDERS, NOT PART OF LATERAL LOAD RESISTING SYSTEM, SUPPORTING METAL DECK WITH ALL CONCRETE FILL SHALL HAVE THE STUDS AT MAX. 24" O.C. ALL BEAMS PART OF LATERAL LOAD RESISTANCE SYSTEM, EITHER WIND GIRDER OR HORIZONTAL BRACING BEAM, SHALL HAVE STUDS 30" O.C. IN NON-SEISMIC AREA AND 18" O.C. IN SEISMIC AREA.

1 TYPICAL SHEAR CONNECTORS (S.C.) DETAILS
3/4" = 1'-0"

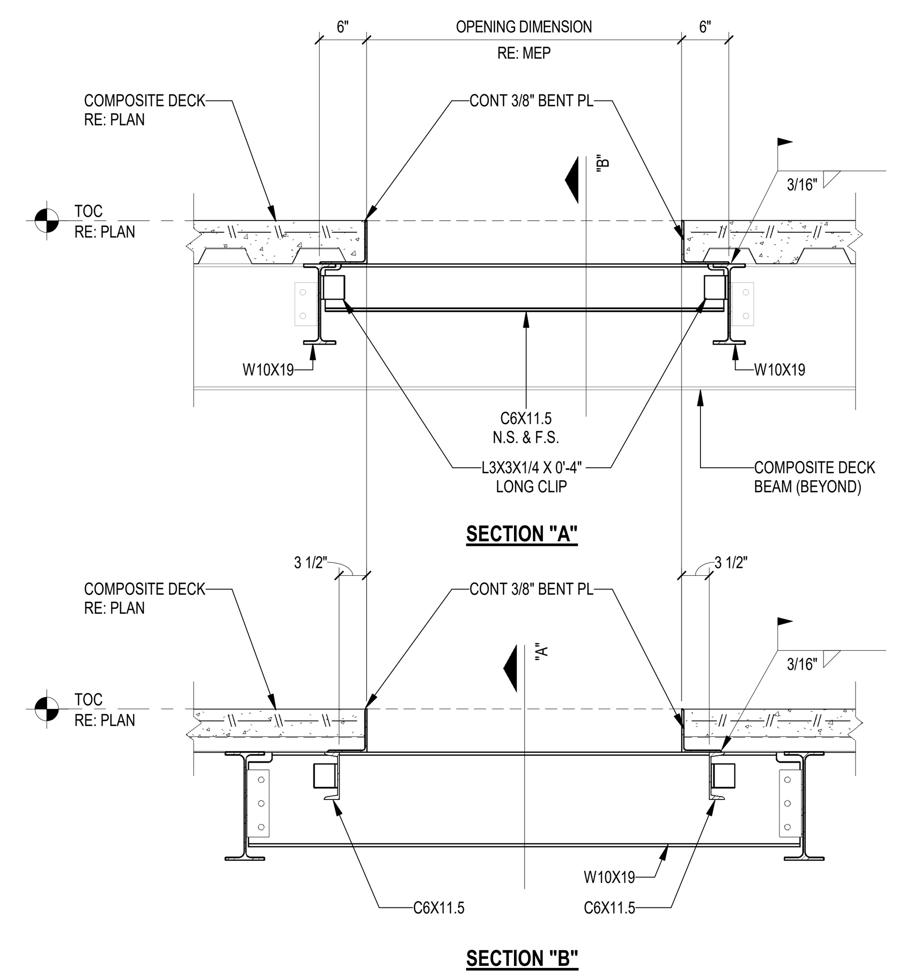

NOTES:
1. DETAIL SIM. FOR OPENINGS BETWEEN BEAMS.
2. APPLIES TO ALL OPENINGS WITH A DIMENSIONS GREATER THAN 12" BUT LESS THAN 30".
3. G.C. TO COORDINATE CURB REQUIREMENTS AROUND OPENINGS WITH ARCHITECTURAL DRAWINGS.

2 TYPICAL COMPOSITE DECK OPENING (SECTION)
3/4" = 1'-0"

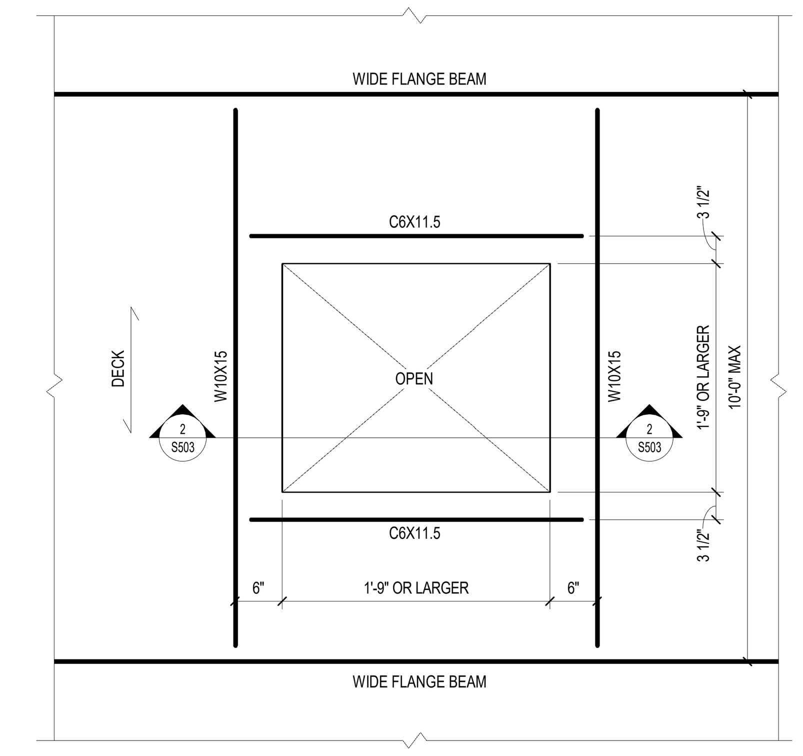

3 TYPICAL COMPOSITE DECK OPENING (PLAN)
3/4" = 1'-0"

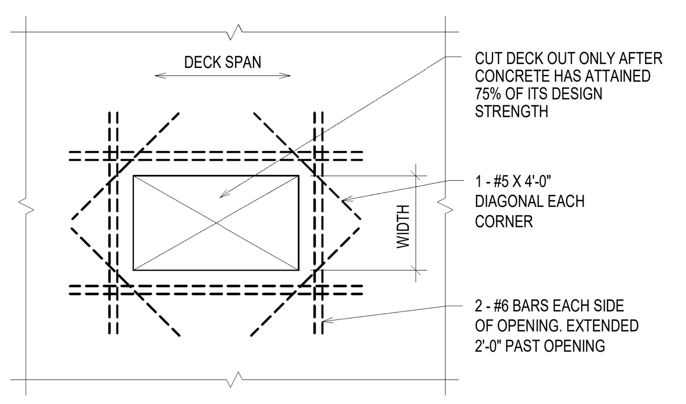

THIS DETAIL APPLIES TO OPENINGS WHERE THE "WIDTH" IS 10" TO 2'-0" OMIT #6 BARS AT OPENINGS LESS THAN 10" IN WIDTH. OPENINGS GREATER THAN 2'-0" MUST BE FRAMED WITH STEEL BEAMS.

4 TYPICAL COMPOSITE DECK OPENING REINF.
3/4" = 1'-0"

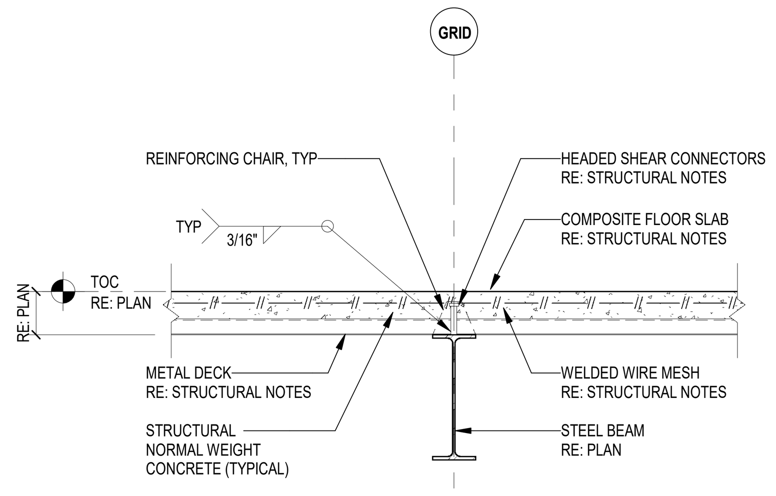

5 COMPOSITE DECK AT BEAM
3/4" = 1'-0"

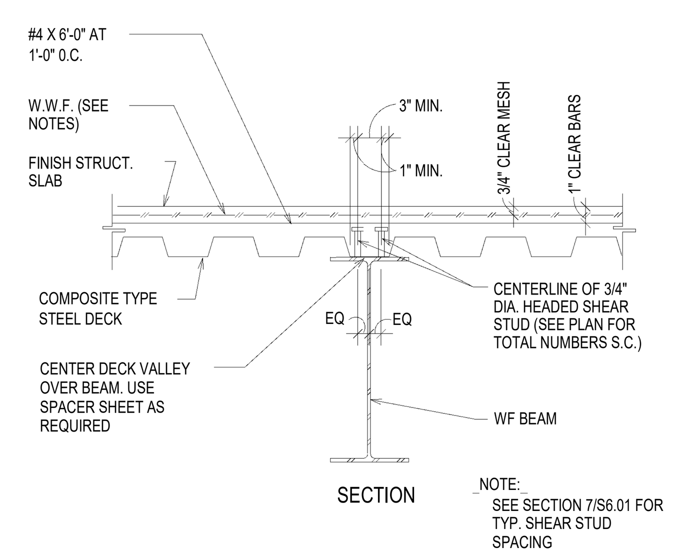

6 TYPICAL COMPOSITE GIRDER
3/4" = 1'-0"

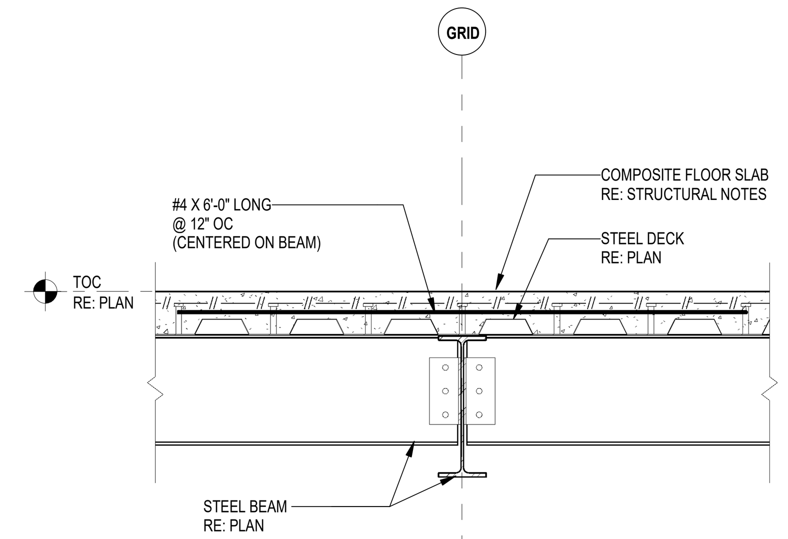

7 COMPOSITE DECK AT GIRDER
3/4" = 1'-0"

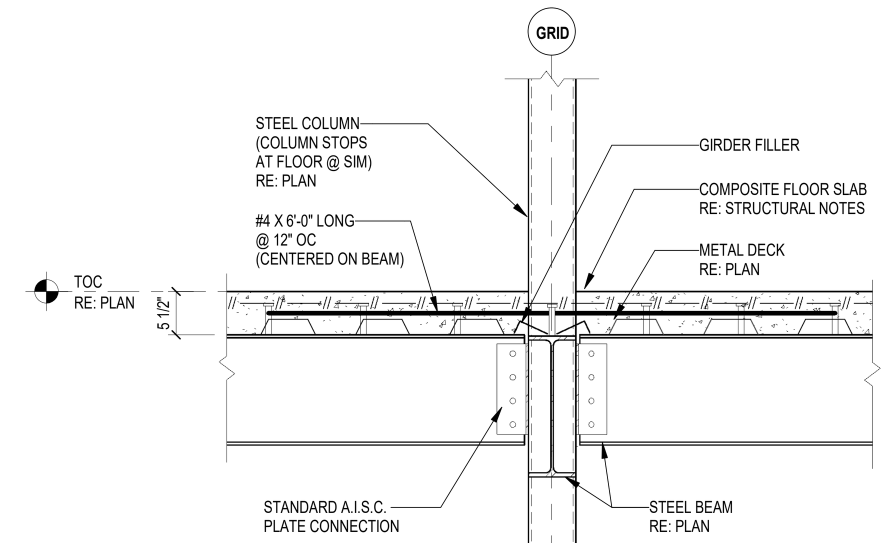

8 COMPOSITE DECK AT INTERIOR COLUMN
3/4" = 1'-0"

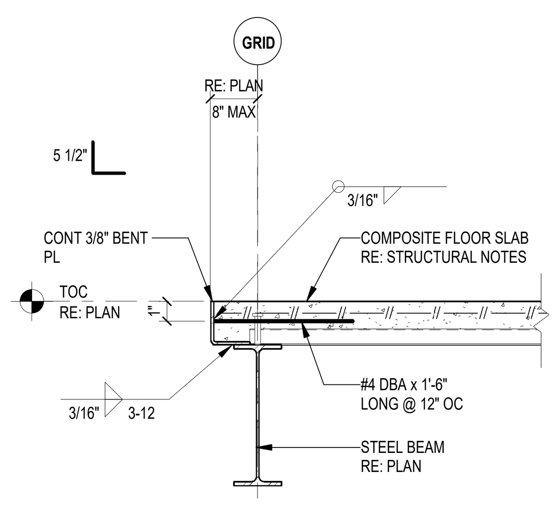

9 COMPOSITE DECK AT EXTERIOR BEAM
3/4" = 1'-0"

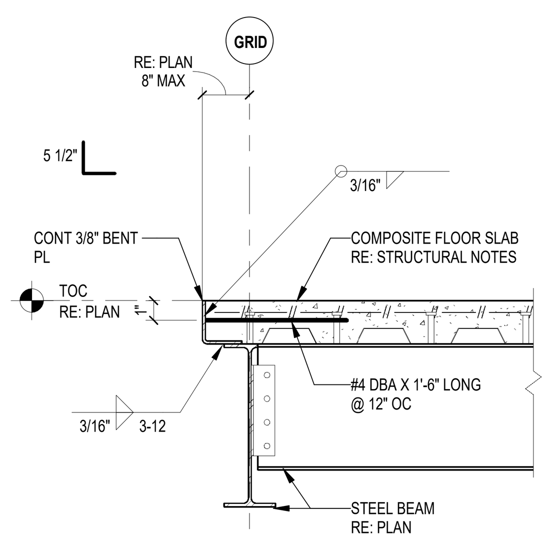

10 COMPOSITE DECK AT EXTERIOR GIRDER
3/4" = 1'-0"

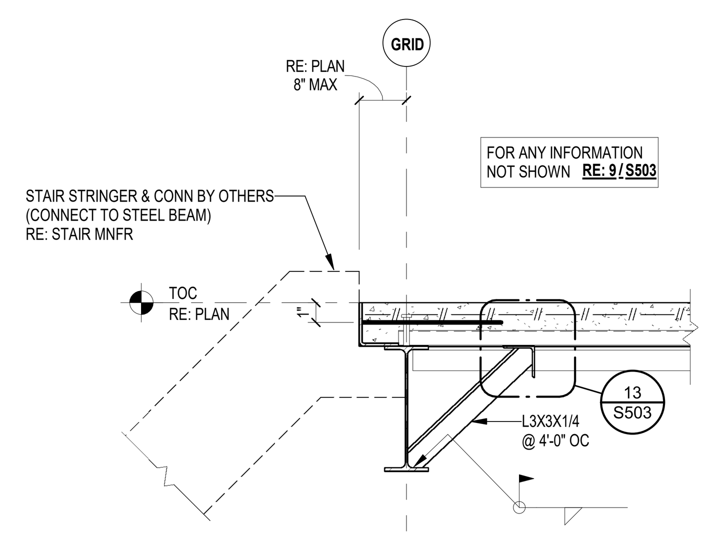

11 COMPOSITE DECK AT STAIR STRINGER
3/4" = 1'-0"

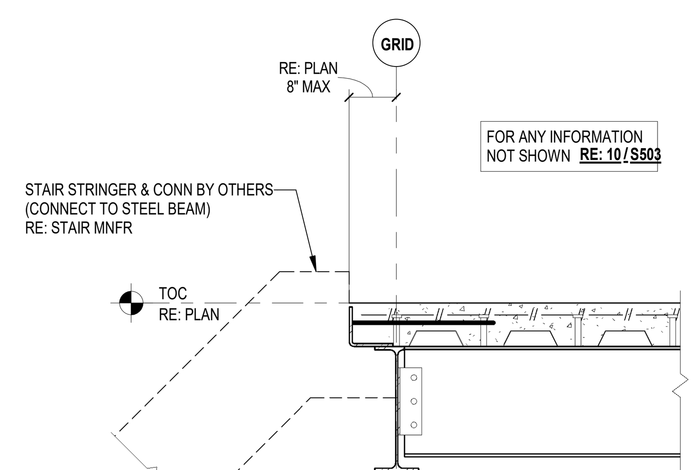

12 COMPOSITE DECK AT STAIR STRINGER
3/4" = 1'-0"

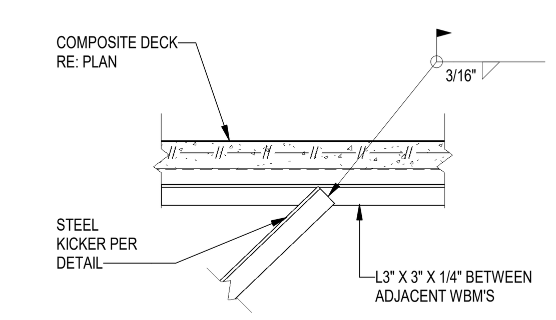

13 TYPICAL COMPOSITE KICKER CONNECTION
3/4" = 1'-0"

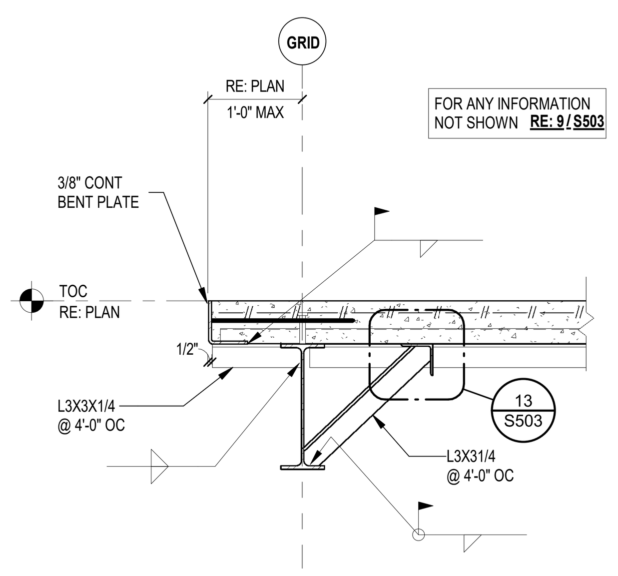

14 COMPOSITE DECK BEAM WITH OUTRIGGERS
3/4" = 1'-0"

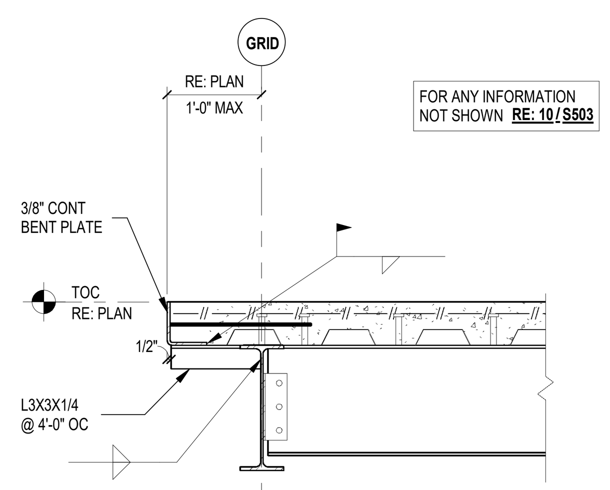

15 COMPOSITE DECK GIRDER WITH OUTRIGGERS
3/4" = 1'-0"

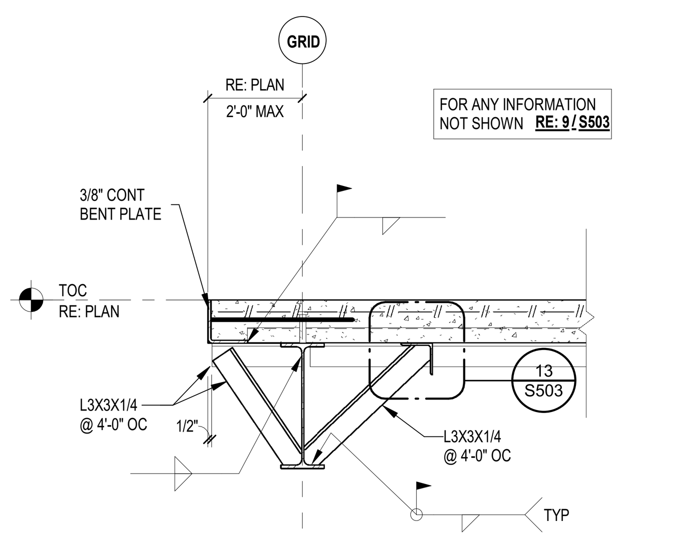

16 COMPOSITE DECK BEAM WITH OUTRIGGERS
3/4" = 1'-0"

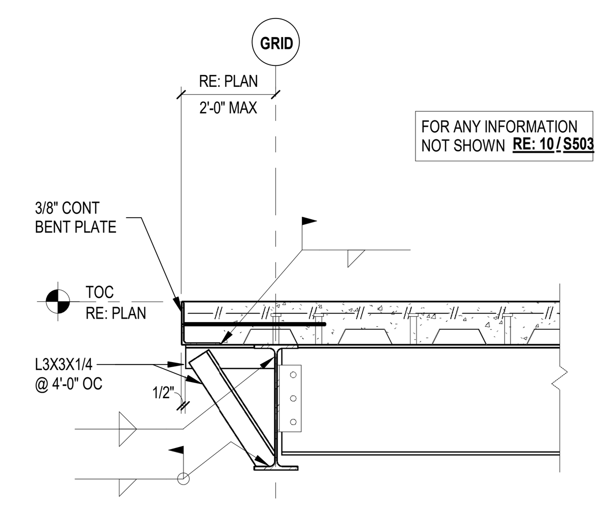

17 COMPOSITE DECK GIRDER WITH OUTRIGGERS
3/4" = 1'-0"

NOTE:
FOR COMPOSITE DECK DIRECTION RE: PLAN

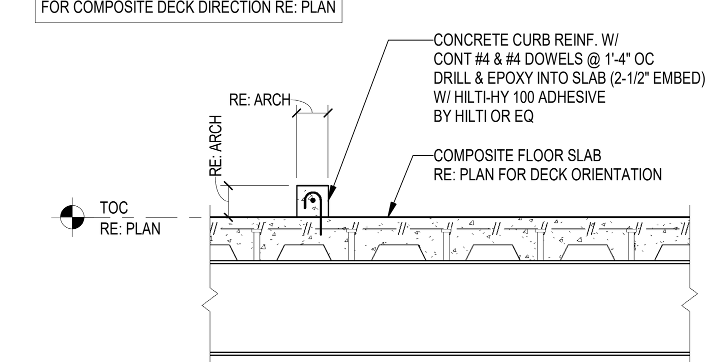

18 TYPICAL CURB AT COMPOSITE DECK
3/4" = 1'-0"

FSGROUP ARCHITECTS
16575 Village Drive
Houston Texas 77040
713 344 1752 PH
fsdesignbuild.com

PROJECT NAME

INFORMATION TECHNOLOGY BUILDING
EUGENE HEIMANN CIRCLE
FORT BEND COUNTY . RICHMOND . TEXAS

CONSULTANTS

Dally + ASSOCIATES
STRUCTURAL | CIVIL
9800 Richmond Avenue, Suite 460
Houston, Texas 77042
t 713 337 8881
Texas Registered Engineering Firm F-003426

PROFESSIONAL SEAL

FRED DALLY
90904
05/15/2024

ISSUED FOR

ISSUED FOR PROPOSALS & PERMIT

REVISIONS

No.	DESCRIPTION	DATE

KEY PLAN

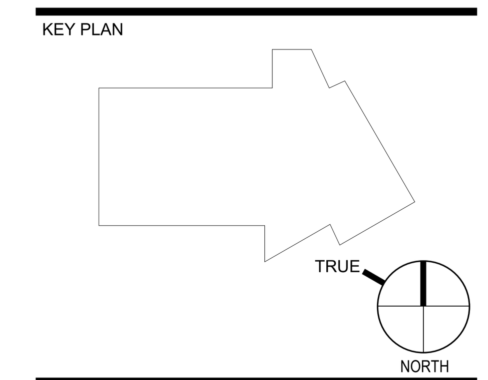

SHEET TITLE

TYPICAL COMPOSITE FRAMING DETAILS

SCALE 3/4" = 1'-0"

DATE 05/15/24

PROJECT NUMBER 2319

SHEET NUMBER

S503

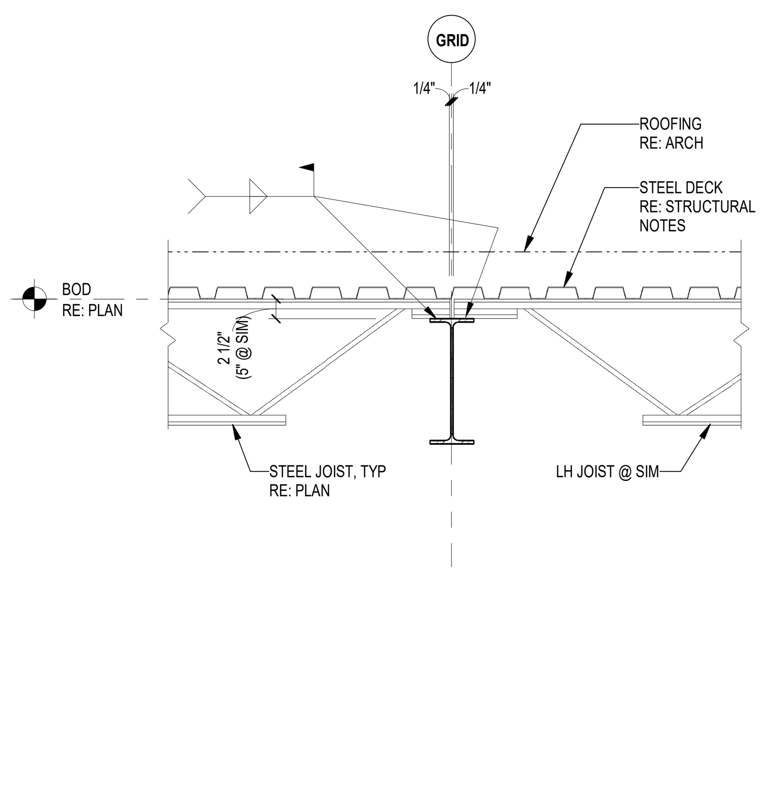

1 TYPICAL ROOF SECTION
3/4" = 1'-0"

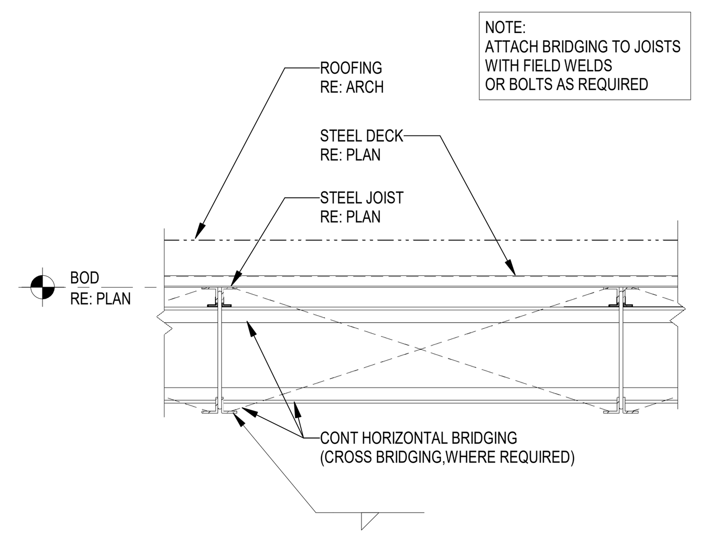

2 TYPICAL ROOF SECTION
3/4" = 1'-0"

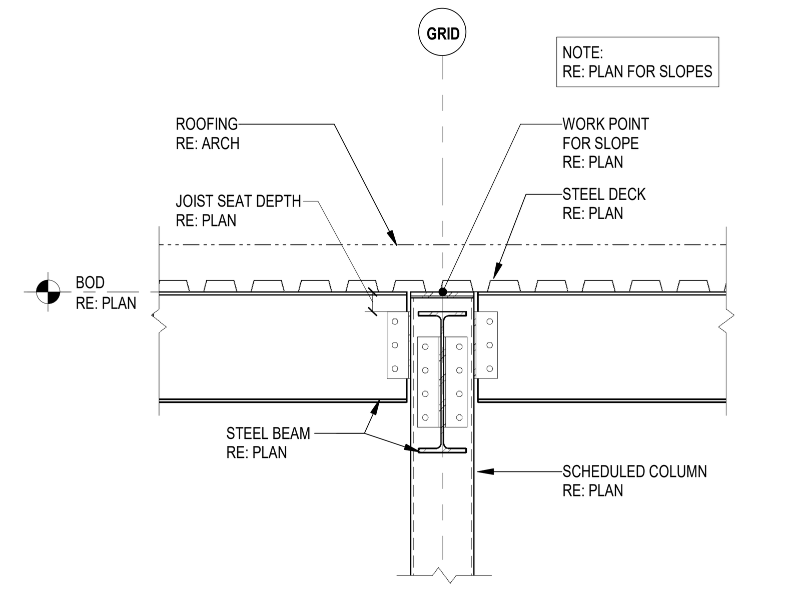

3 TYPICAL ROOF SECTION
3/4" = 1'-0"

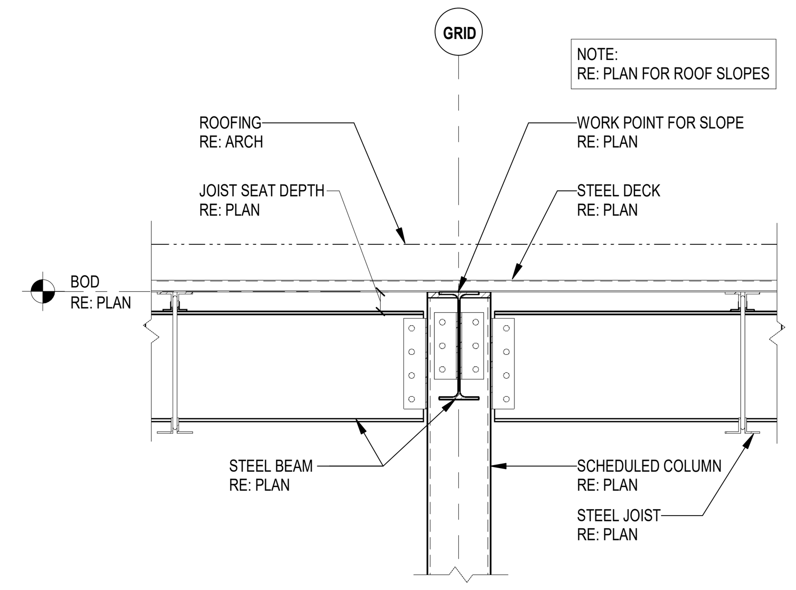

4 TYPICAL ROOF SECTION
3/4" = 1'-0"

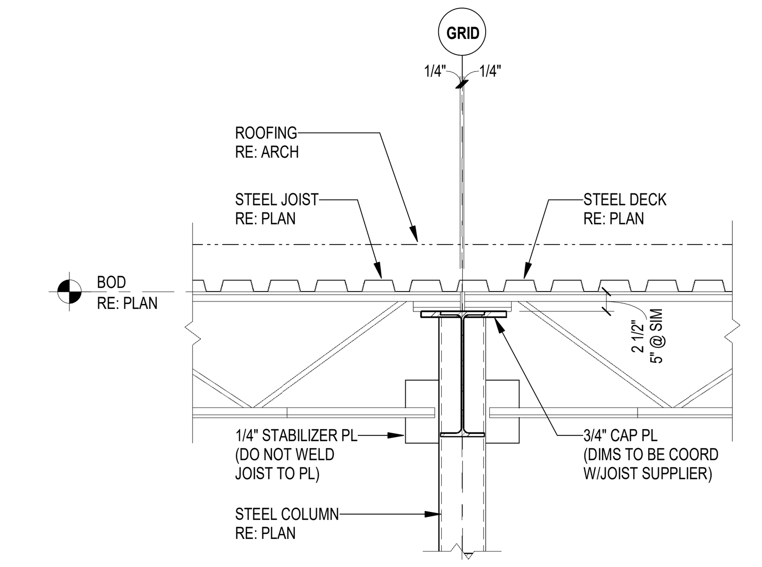

5 TYPICAL ROOF SECTION
3/4" = 1'-0"

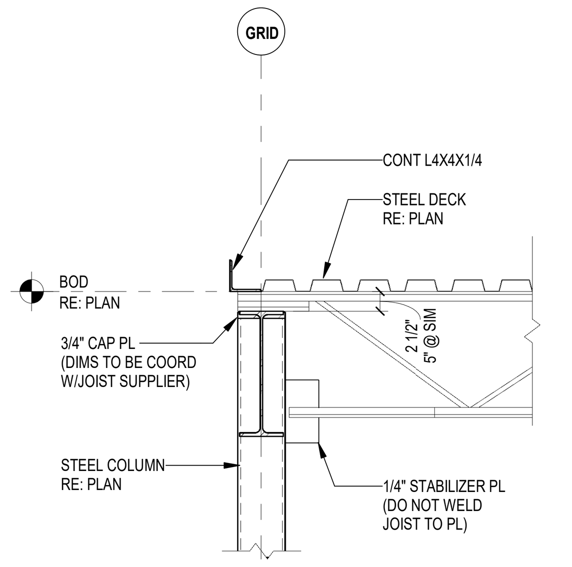

6 TYPICAL ROOF SECTION
3/4" = 1'-0"

NOTE:
TYPICAL ROOF OPENING DETAIL SHOWN APPLIES TO ALL ROOF OPENINGS WHERE LEAST DIMENSION IS 13" OR LARGER. REINFORCE ROOF OPENINGS LESS THAN 13" BY WELDING 16 GAGE SHEET METAL 1'-0" WIDER THAN OPENING TO METAL ROOF DECK.

WHERE DIMENSION "E" IS LESS THAN 6", ANGLE MAY BE OMITTED.

AT EXISTING CONDITIONS REFER TO DETAIL C-C FOR ANGLE CONNECTION

PROVIDE L3X3X1/4 ANGLES AS REQUIRED TO FRAME OPENING, TYP. PROVIDE JOIST STRUT AS REQUIRED. REFER TO TYP JOIST REINFORCEMENT DETAIL RE: 8 / S504

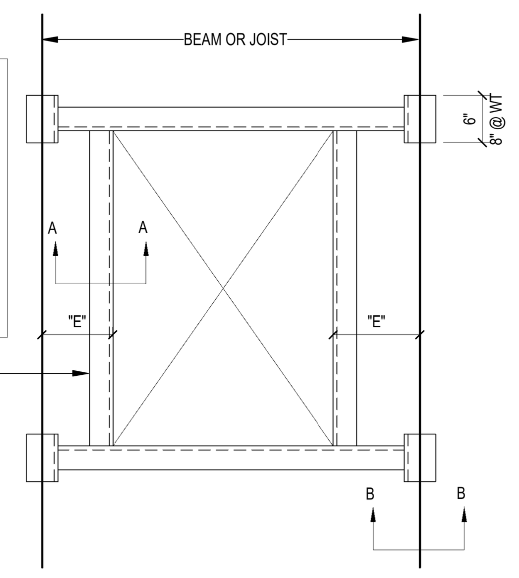

TYPICAL ROOF OPENING - PLAN VIEW

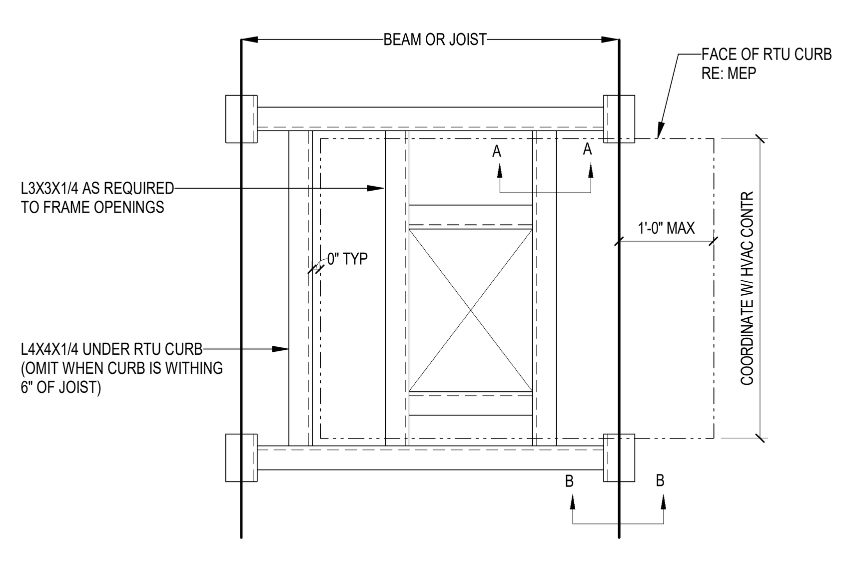

TYPICAL RTU SUPPORT DETAILS

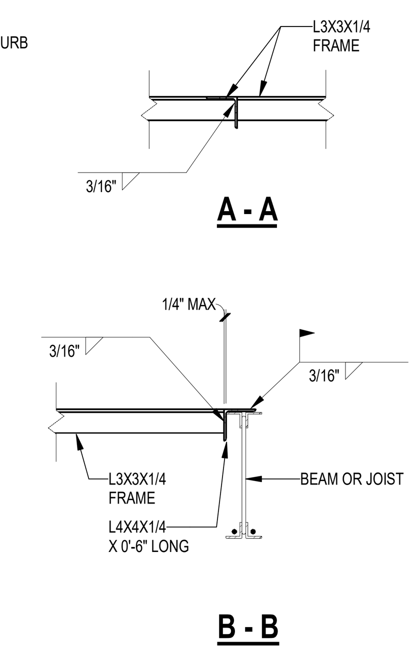

7 TYPICAL ROOF OPENING
3/4" = 1'-0"

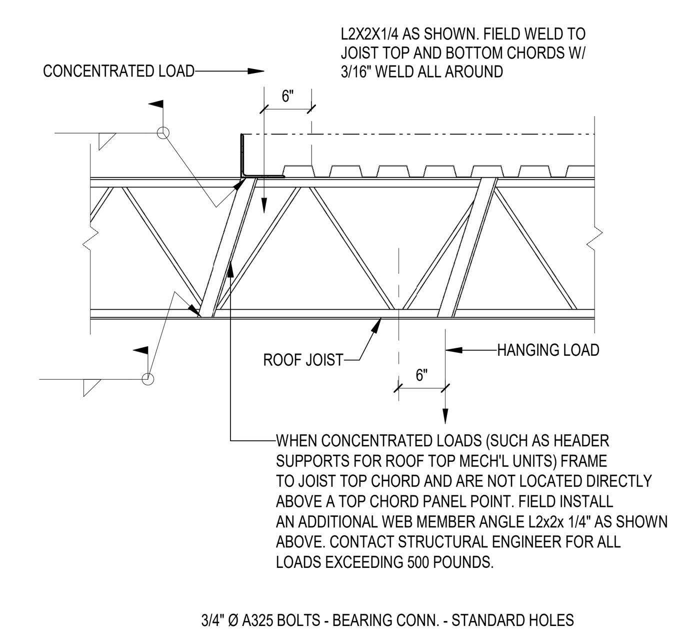

8 LOAD OFFSET FROM JOIST PNL POINT
3/4" = 1'-0"

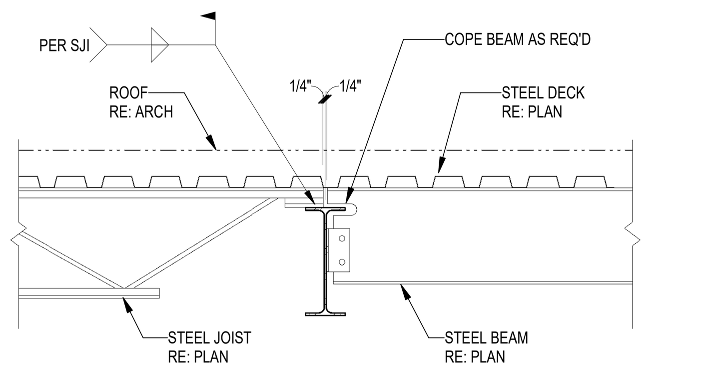

9 TYPICAL ROOF SECTION
3/4" = 1'-0"

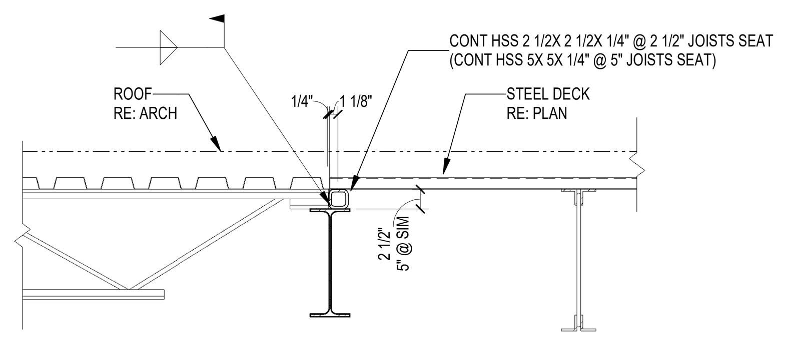

10 TYPICAL ROOF SECTION
3/4" = 1'-0"

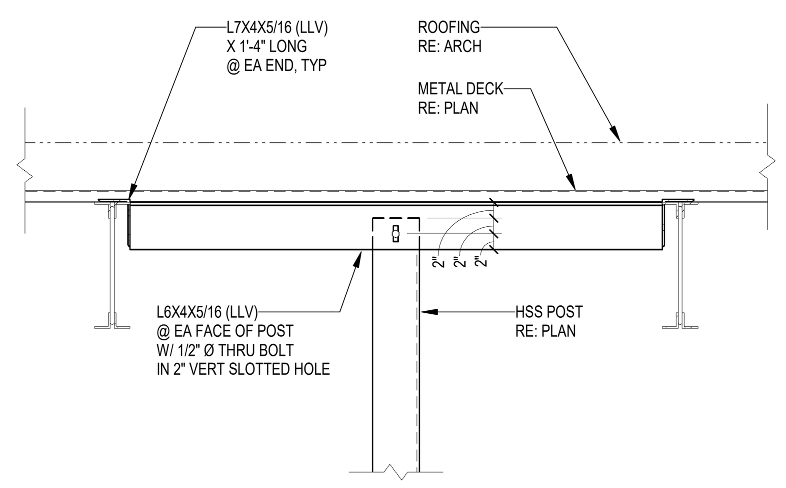

11 TYPICAL HSS POST CONN.
3/4" = 1'-0"

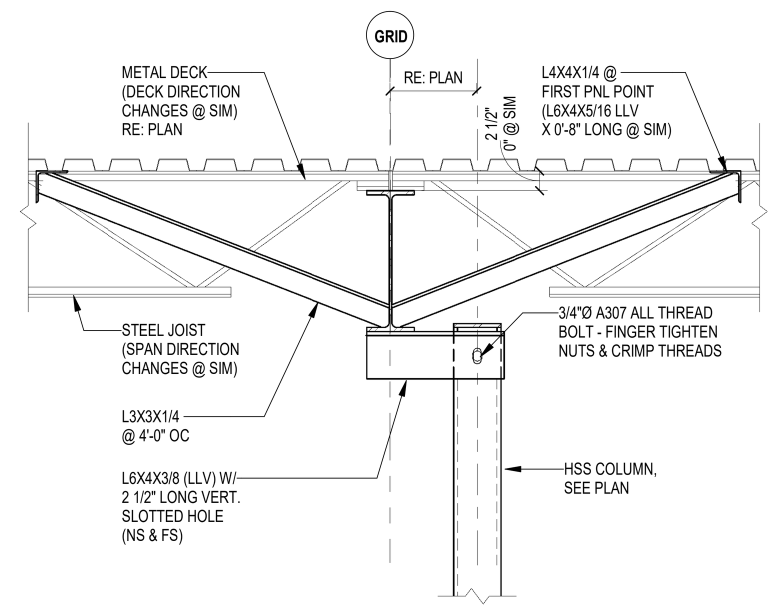

12 TYPICAL HSS POST CONN.
3/4" = 1'-0"

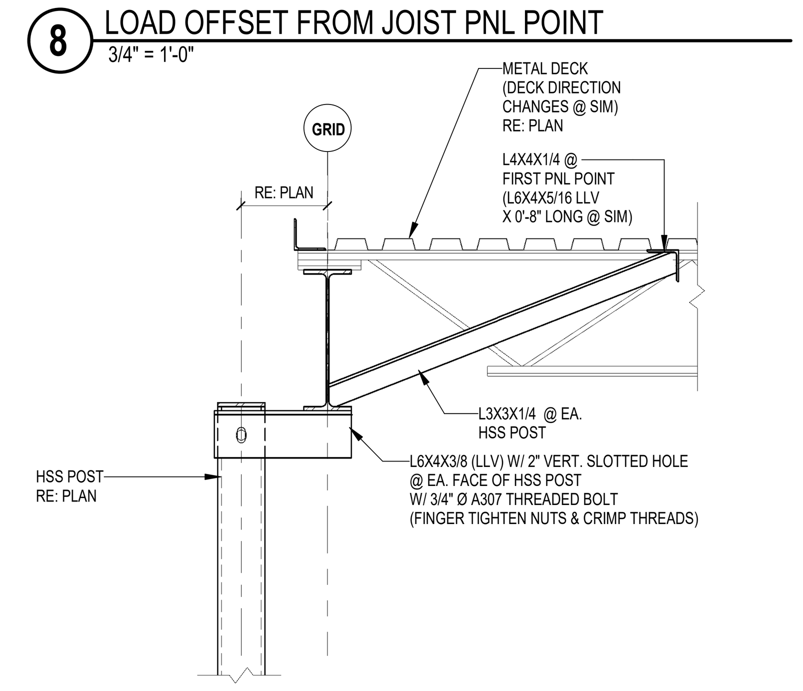

13 TYPICAL HSS POST CONN.
3/4" = 1'-0"

NOTES:

1. PIPE SUPPORTS TO BE PLACED AT 10'-0" MAX O.C WHERE PIPES RUN PARALLEL TO JOISTS. JOIST MANUF. TO DESIGN FOR POINT LOADS (PIPE RUN PLF x 10') ALONG JOIST SPAN @10' MAX O.C FOR WORST LOAD CONDITION.

2. WHERE PIPES RUN PERPENDICULAR TO JOISTS, PIPE SUPPORTS TO PLACED AT ALTERNATE JOIST MAX. JOIST MANUFACTURER TO DESIGN FOR A POINT LOAD WITH 12' TRIB (PIPE RUN PLF x 12') ALONG THE PIPE RUNS.

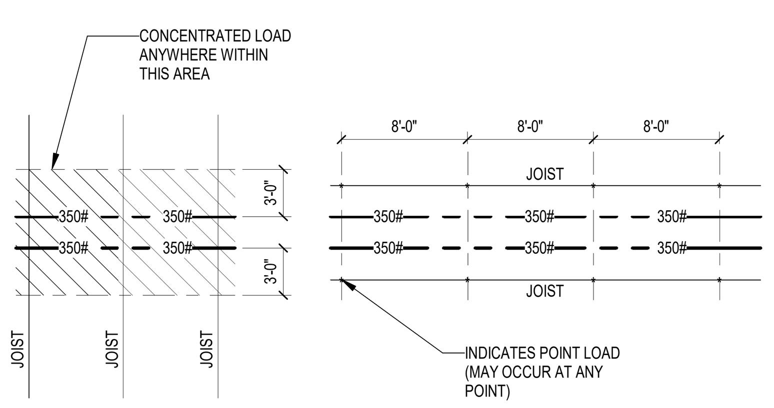

WHERE JOISTS ARE PERINDICULAR, DESIGN FOR CONCENTRATED LOAD INDICATED TO BE ANYWHERE WITHIN 3'-0" FROM THE EDGE OF PIPES.

WHERE JOISTS ARE PARALLEL, DESIGN FOR ADDITIONAL CONCENTRATED LOADS AS INDICATED @ 8'-0" OC MAX ALONG JOIST FOR THE WORST CASE LOADING CONDITION. IF LOAD IS OFFSET FROM PANEL POINT RE: 8 / S504

14 TYPICAL PIPE LOADING DIAGRAM
1/8" = 1'-0"

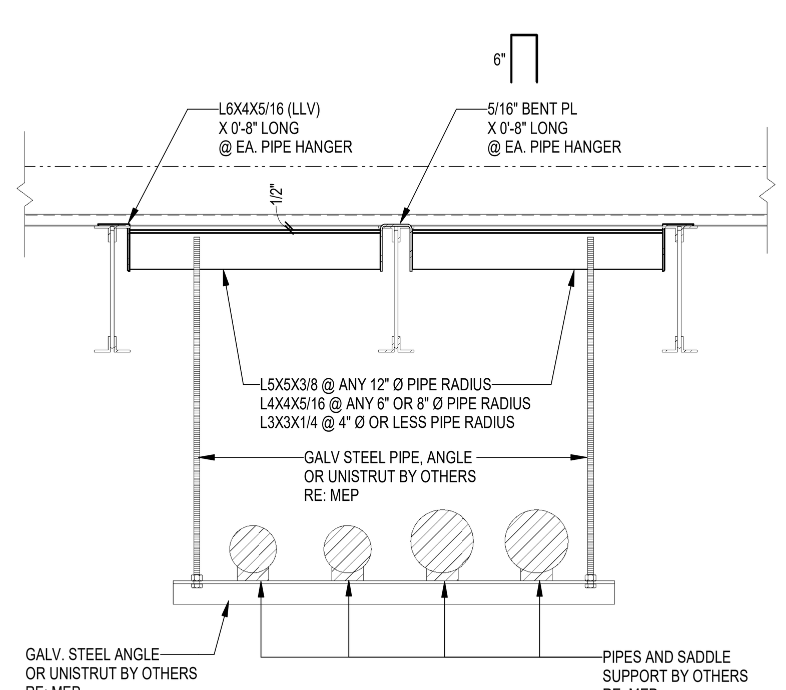

15 TYPICAL PIPE HANGER DETAIL
3/4" = 1'-0"

FSGROUP ARCHITECTS
16575 Village Drive
Houston Texas 77040
713 344 1752 PH
fsdesignbuild.com

PROJECT NAME

INFORMATION TECHNOLOGY BUILDING
EUGENE HEIMANN CIRCLE
FORT BEND COUNTY . RICHMOND . TEXAS

CONSULTANTS

Dally + ASSOCIATES
STRUCTURAL | CIVIL
9800 Richmond Avenue, Suite 460
Houston, Texas 77042
t 713 337 8881
Texas Registered Engineering Firm
F-003426

PROFESSIONAL SEAL

FRED DALLY
90904
05/15/2024

ISSUED FOR
ISSUED FOR PROPOSALS & PERMIT

REVISIONS

No.	DESCRIPTION	DATE

KEY PLAN

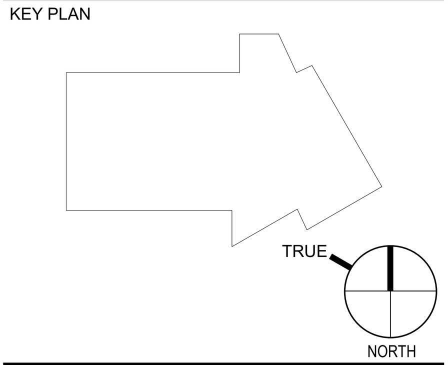

SHEET TITLE
TYPICAL ROOF FRAMING DETAILS

SCALE
As indicated

DATE
05/15/24

PROJECT NUMBER
2319

SHEET NUMBER
S504

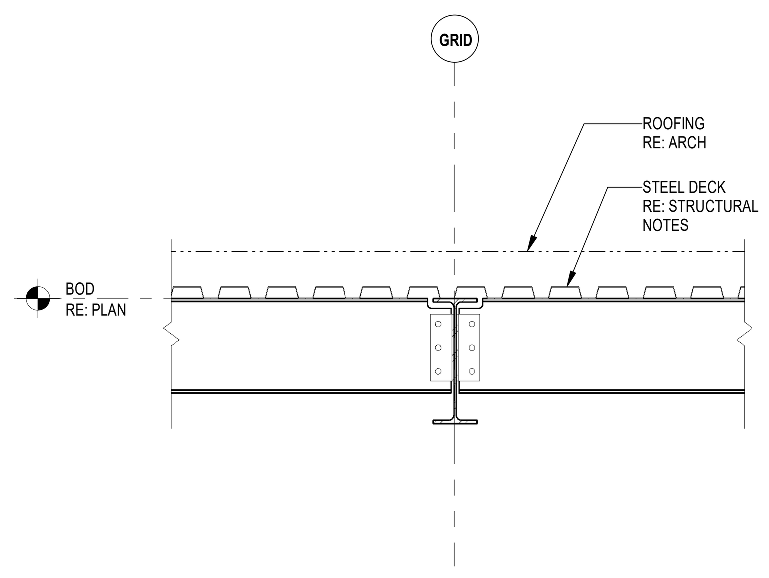

1 TYPICAL ROOF SECTION
3/4" = 1'-0"

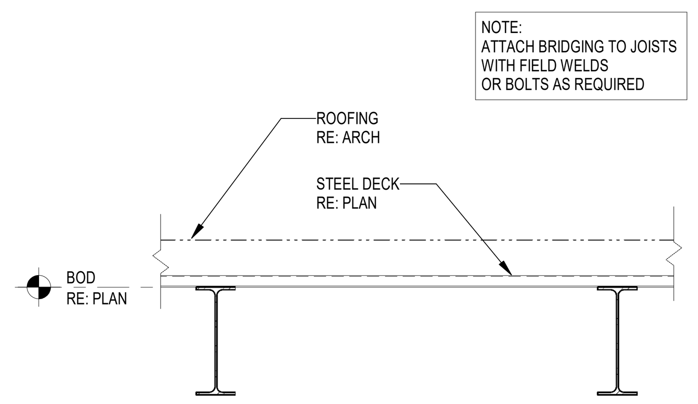

2 TYPICAL ROOF SECTION
3/4" = 1'-0"

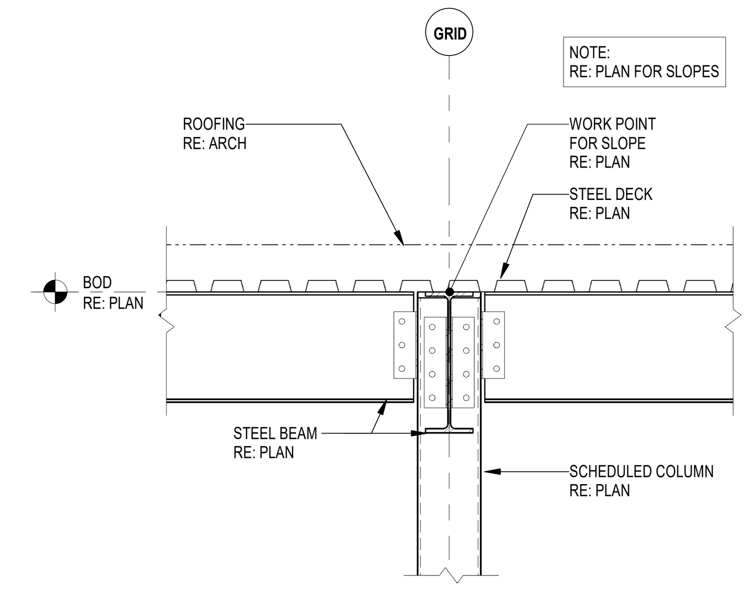

3 TYPICAL ROOF SECTION
3/4" = 1'-0"

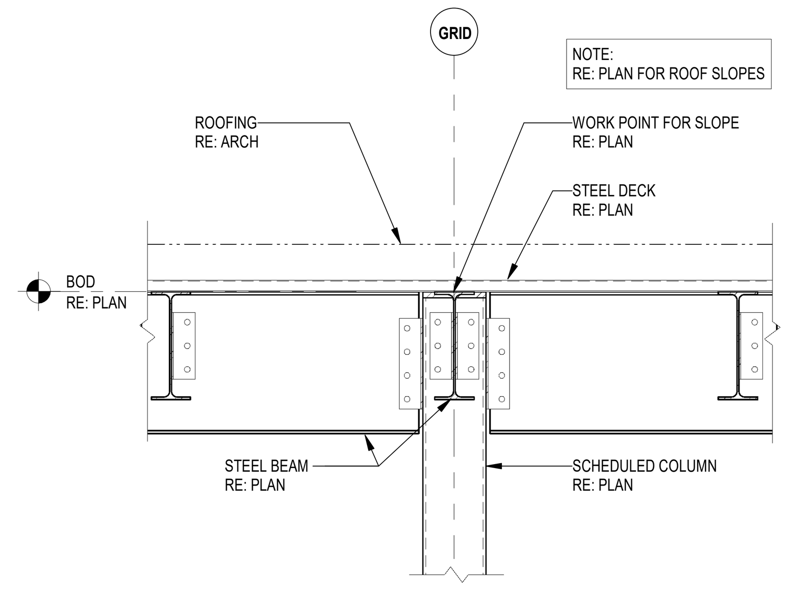

4 TYPICAL ROOF SECTION
3/4" = 1'-0"

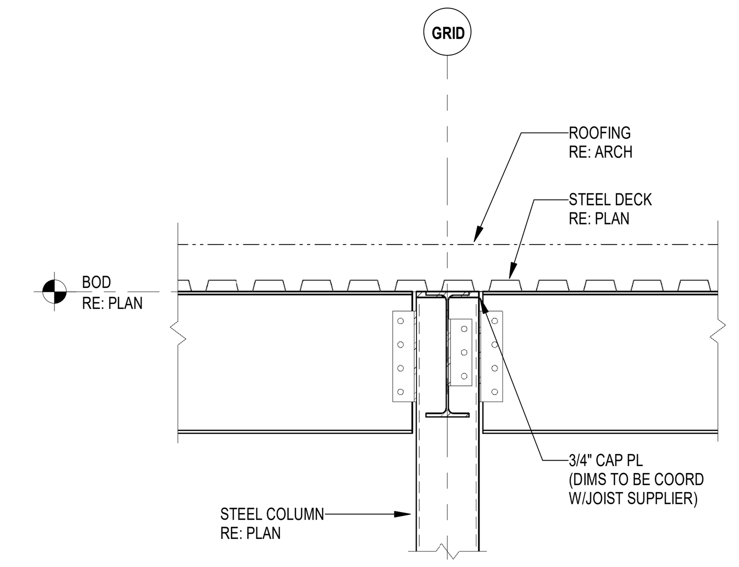

5 TYPICAL ROOF SECTION
3/4" = 1'-0"

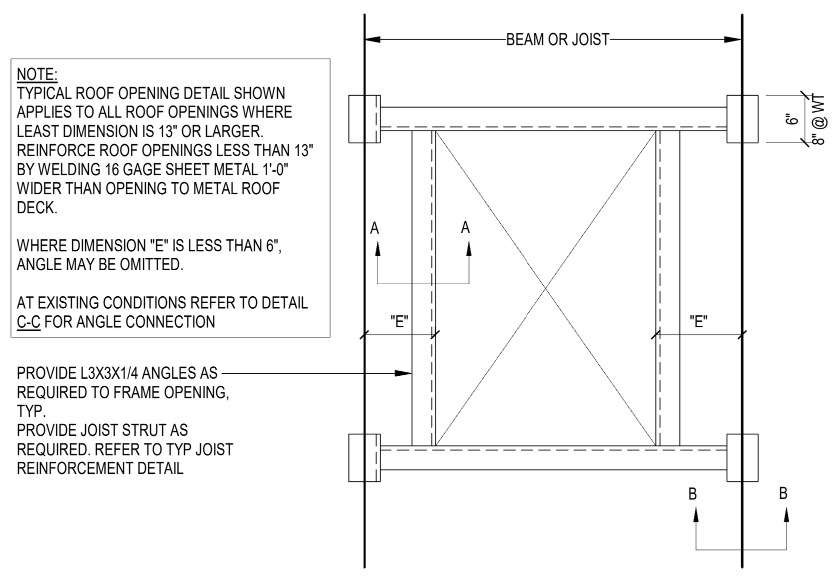

TYPICAL ROOF OPENING - PLAN VIEW

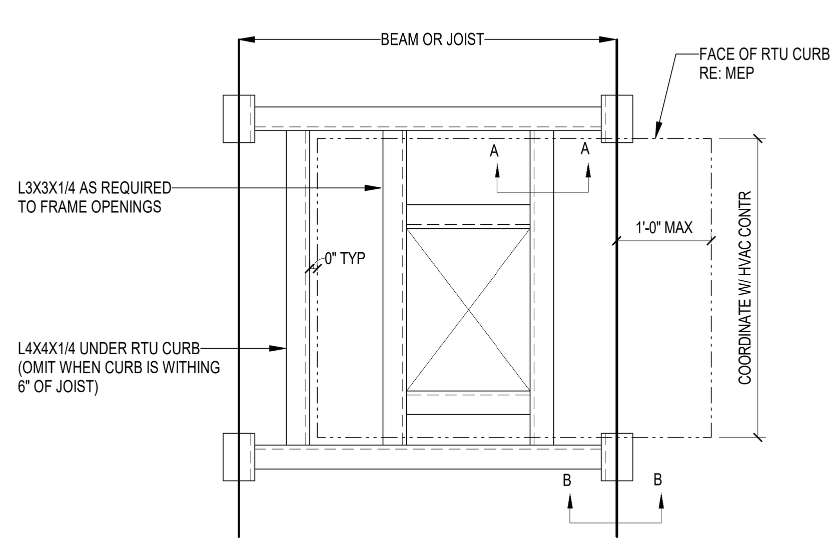

TYPICAL RTU SUPPORT DETAILS

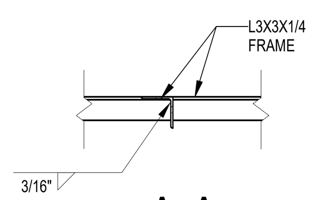

A - A

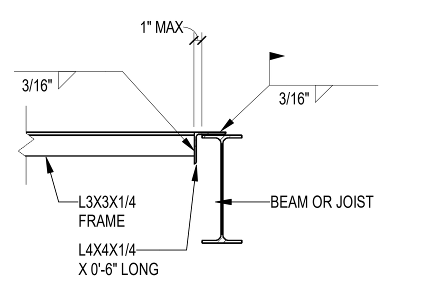

B - B

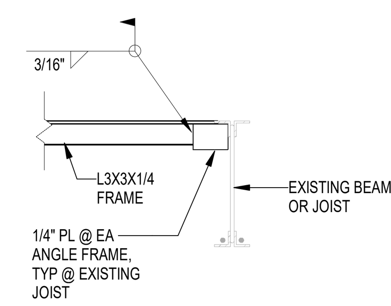

C - C

6 TYPICAL ROOF OPENING
3/4" = 1'-0"

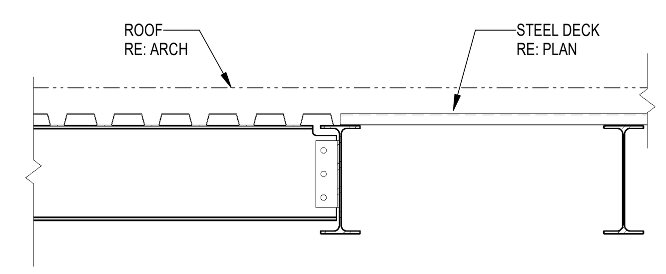

10 TYPICAL ROOF SECTION
3/4" = 1'-0"

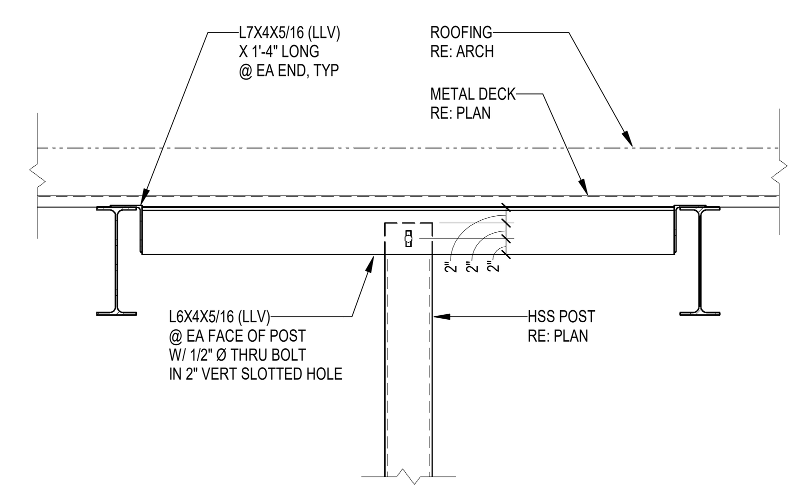

11 TYPICAL HSS POST CONN.
3/4" = 1'-0"

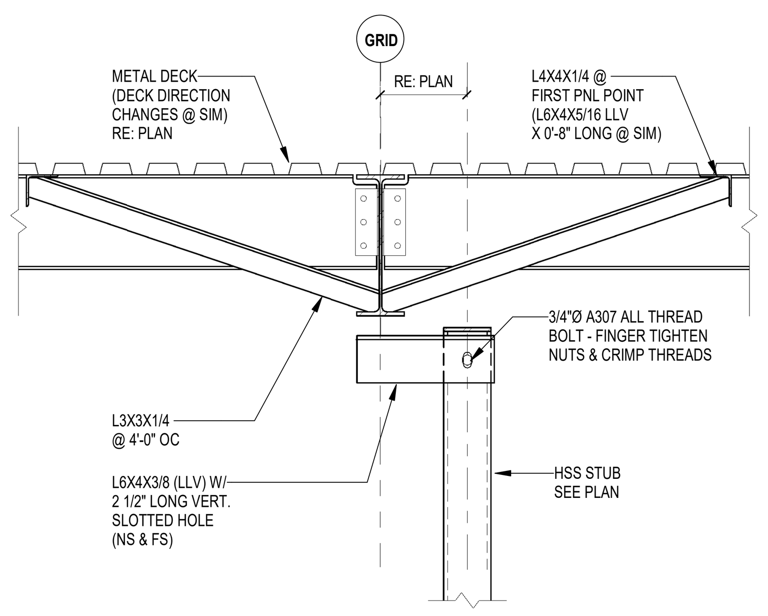

12 TYPICAL HSS POST CONN.
3/4" = 1'-0"

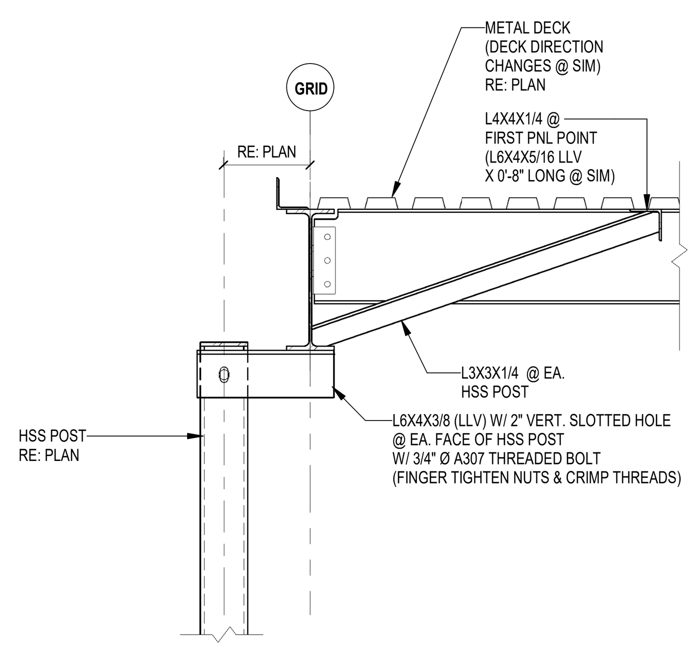

13 TYPICAL HSS POST CONN.
3/4" = 1'-0"

FSGROUP ARCHITECTS
16575 Village Drive
Houston Texas 77040
713 344 1752 PH
fsdesignbuild.com

PROJECT NAME

INFORMATION TECHNOLOGY BUILDING
EUGENE HEIMANN CIRCLE
FORT BEND COUNTY . RICHMOND . TEXAS

CONSULTANTS

Dally + ASSOCIATES
STRUCTURAL | CIVIL
9800 Richmond Avenue, Suite 460
Houston, Texas 77042
t 713 337 8881
Texas Registered Engineering Firm
F-003426

PROFESSIONAL SEAL

FRED DALLY
90904
05/15/2024

ISSUED FOR

ISSUED FOR PROPOSALS & PERMIT

REVISIONS

No.	DESCRIPTION	DATE

KEY PLAN

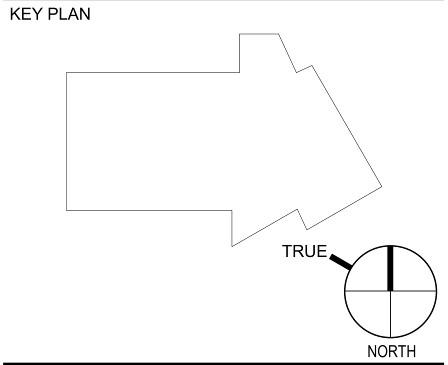

SHEET TITLE

TYPICAL ROOF FRAMING DETAILS

SCALE 3/4" = 1'-0"

DATE 05/15/24

PROJECT NUMBER 2319

SHEET NUMBER

S505

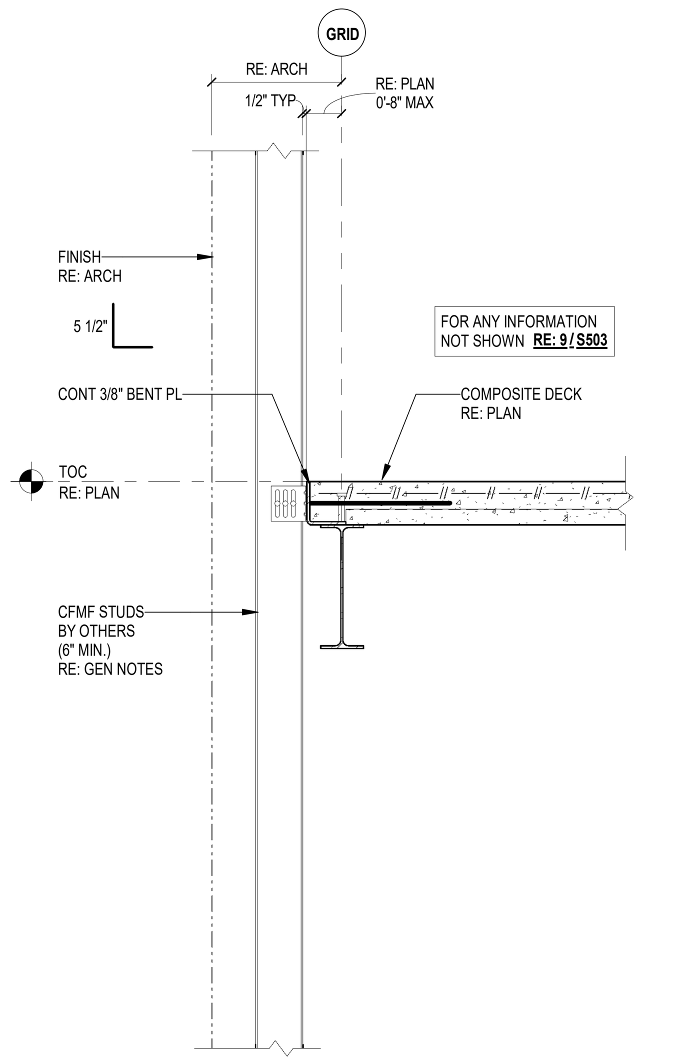

1 SECTION
3/4" = 1'-0"

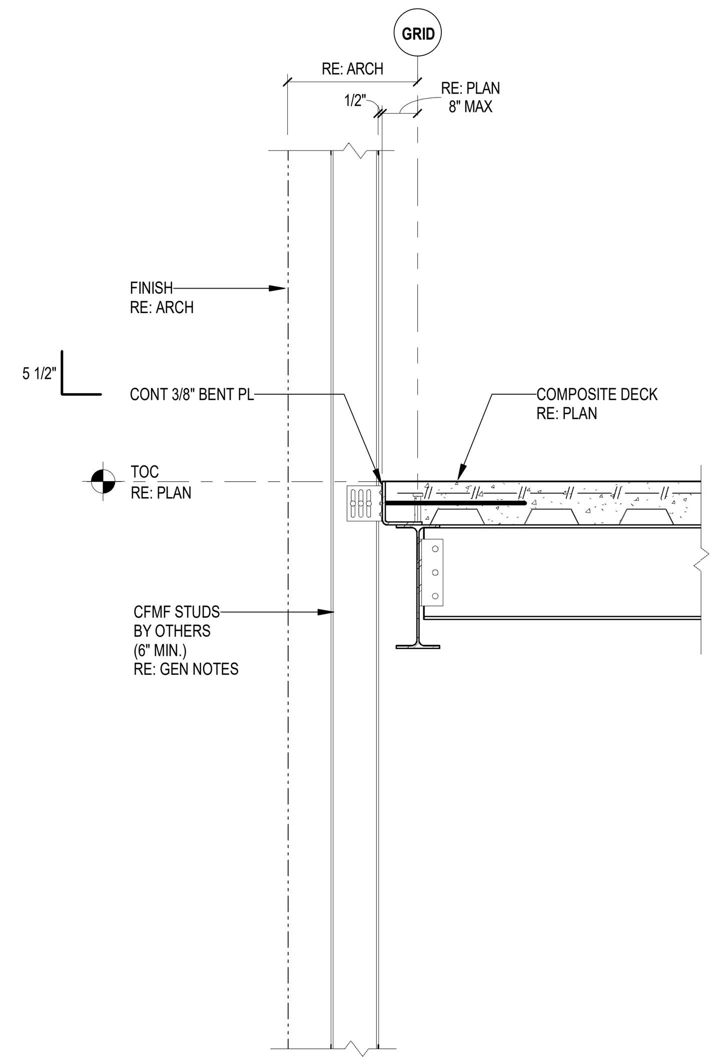

2 SECTION
3/4" = 1'-0"

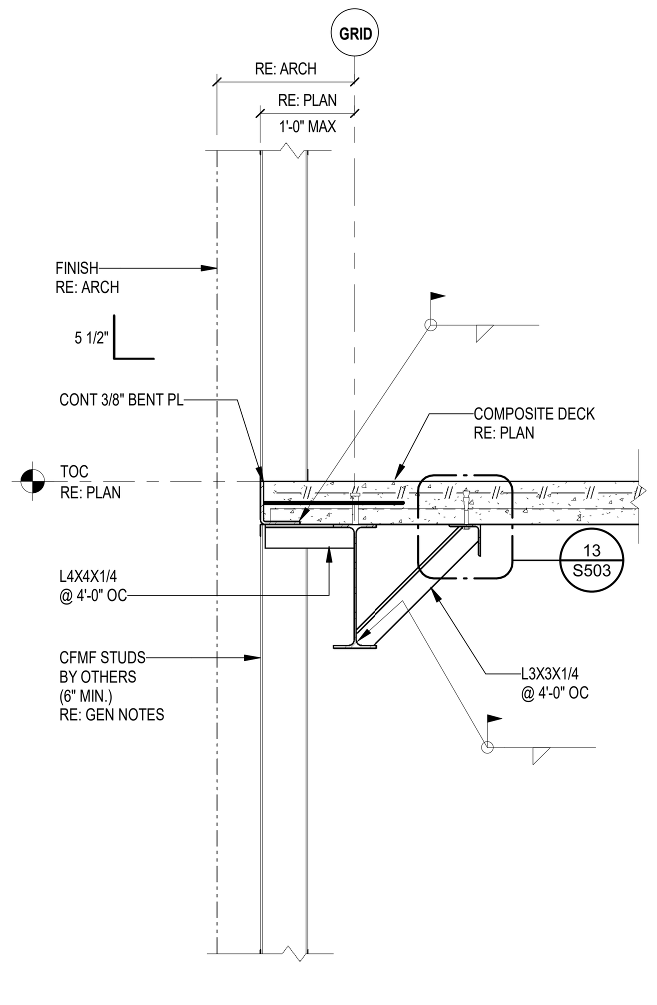

3 SECTION
3/4" = 1'-0"

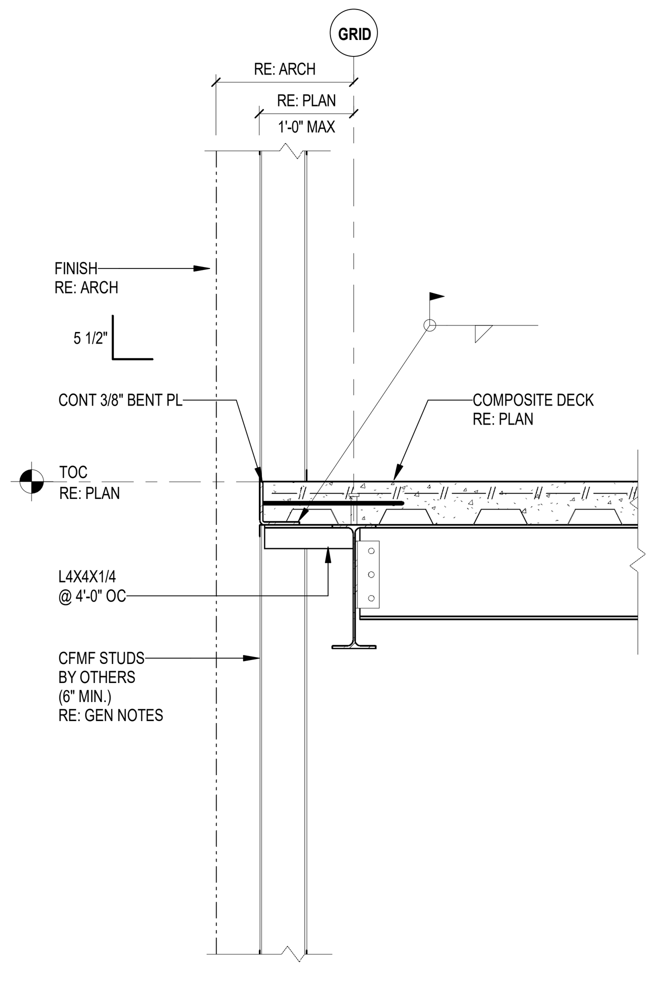

4 SECTION
3/4" = 1'-0"

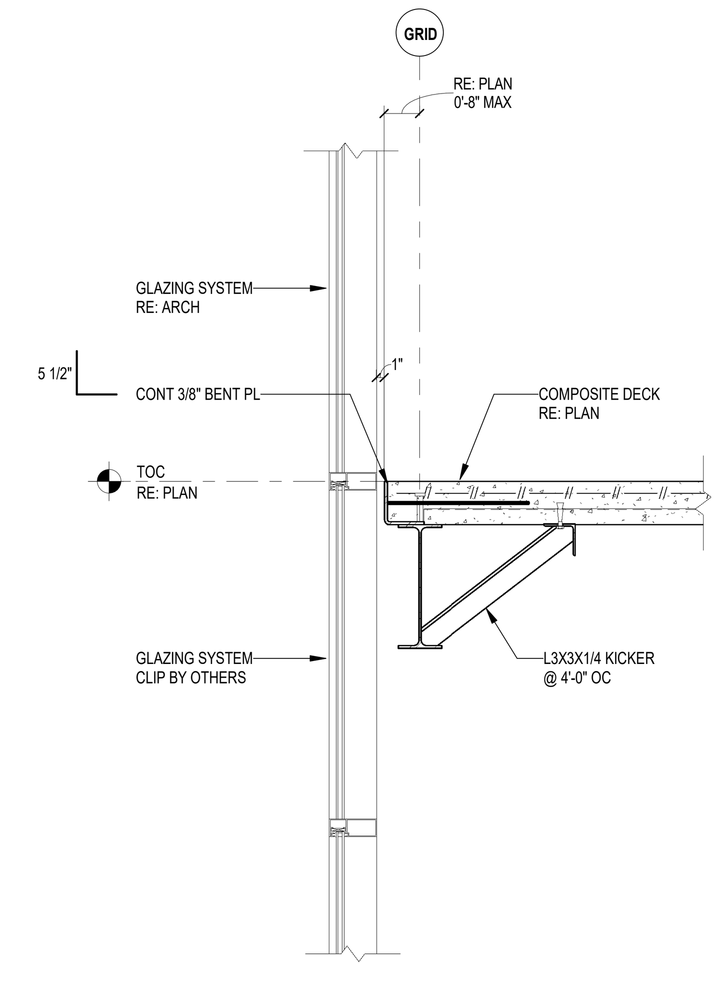

5 SECTION
3/4" = 1'-0"

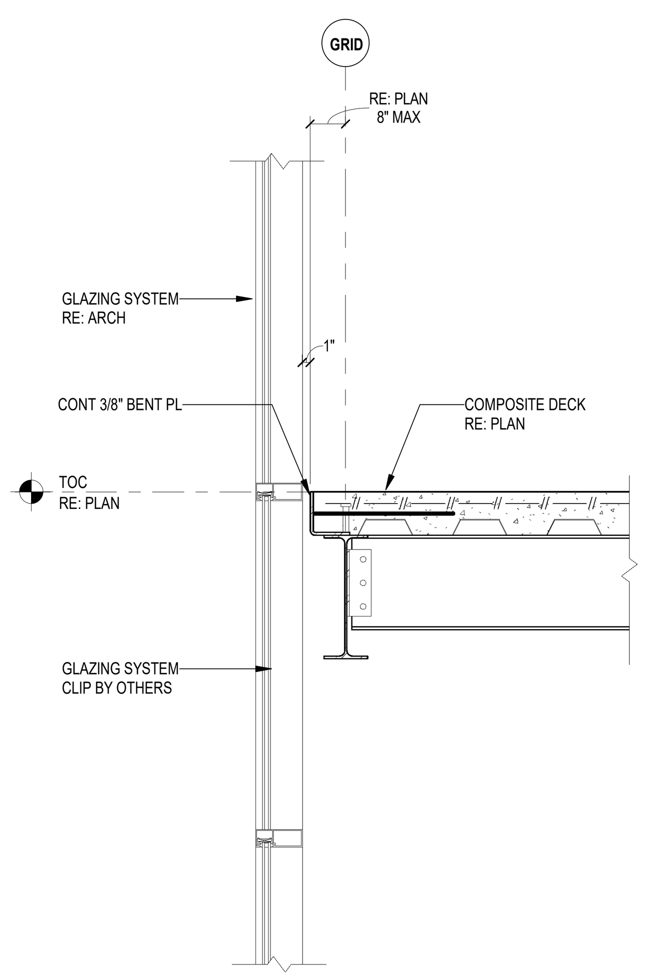

6 SECTION
3/4" = 1'-0"

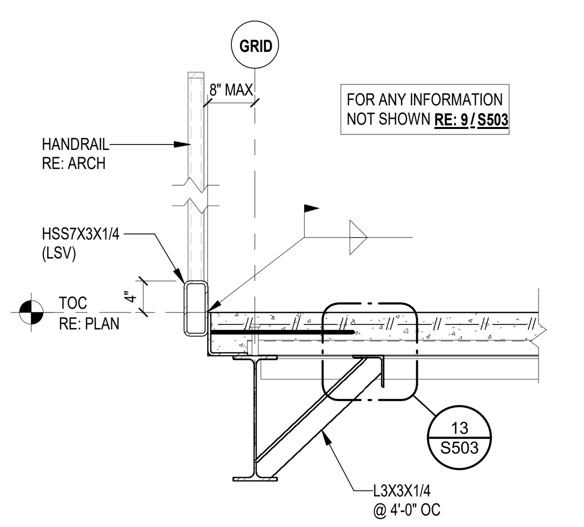

7 COMPOSITE DECK AT HANDRAIL
3/4" = 1'-0"

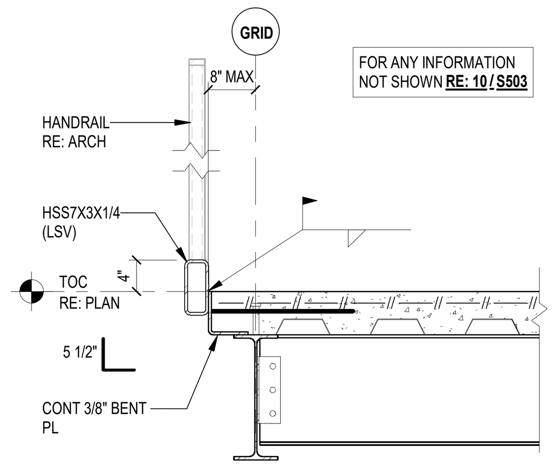

8 COMPOSITE DECK AT HANDRAIL
3/4" = 1'-0"

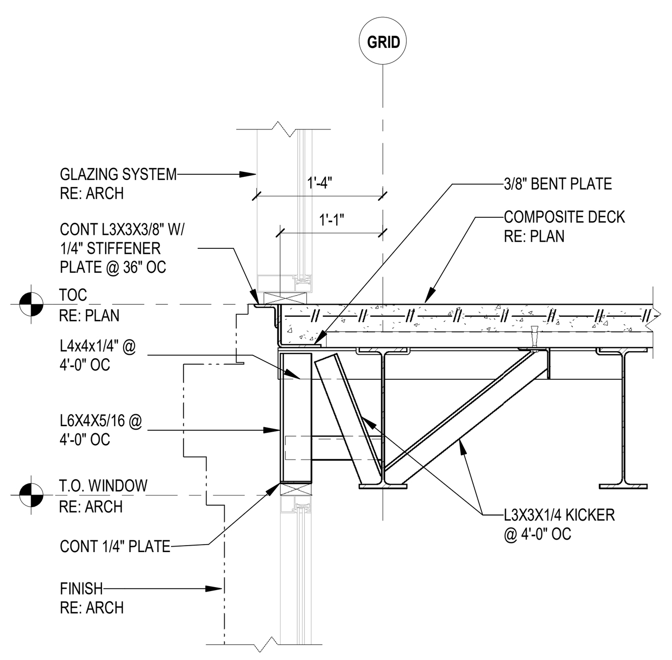

9 ROOF SECTION
3/4" = 1'-0"

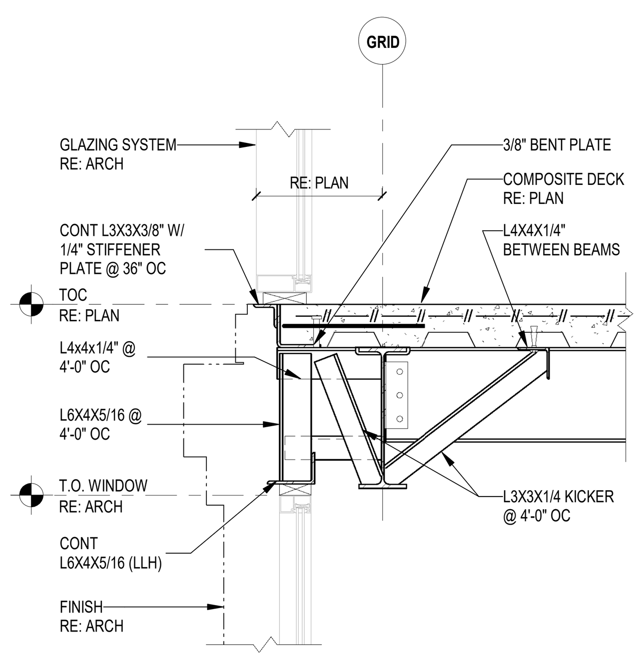

10 ROOF SECTION
3/4" = 1'-0"

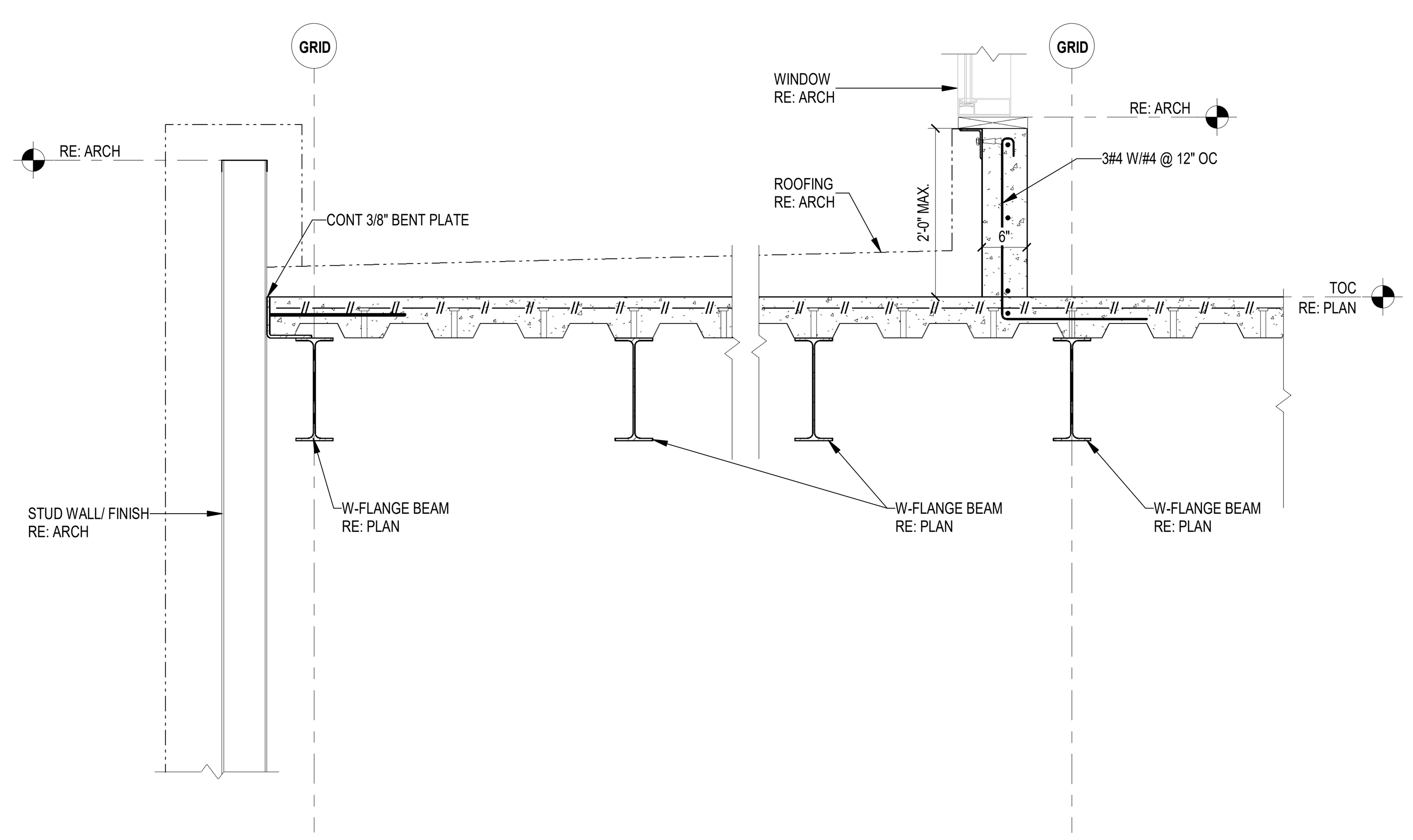

11 ROOF SECTION
3/4" = 1'-0"

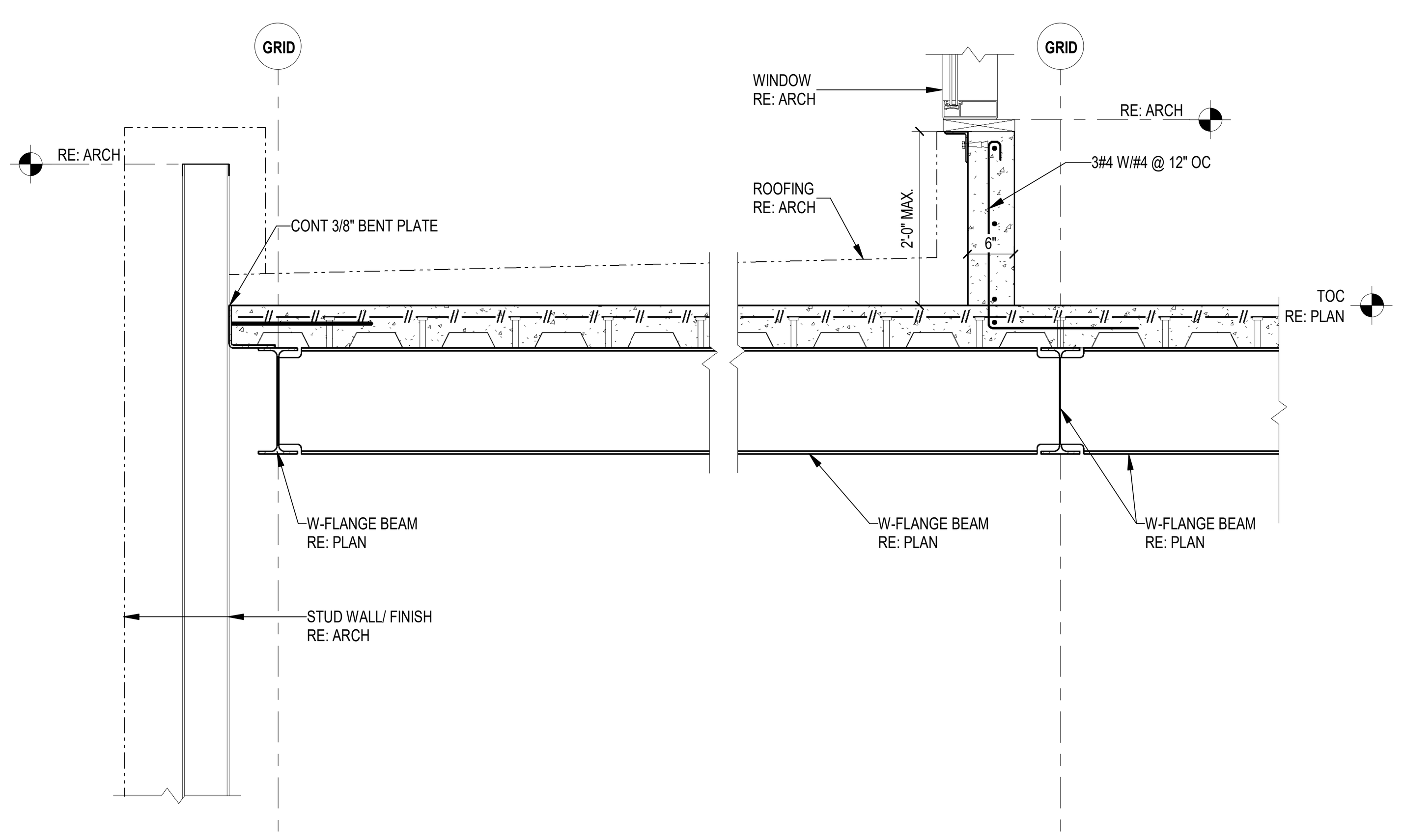

12 ROOF SECTION
3/4" = 1'-0"

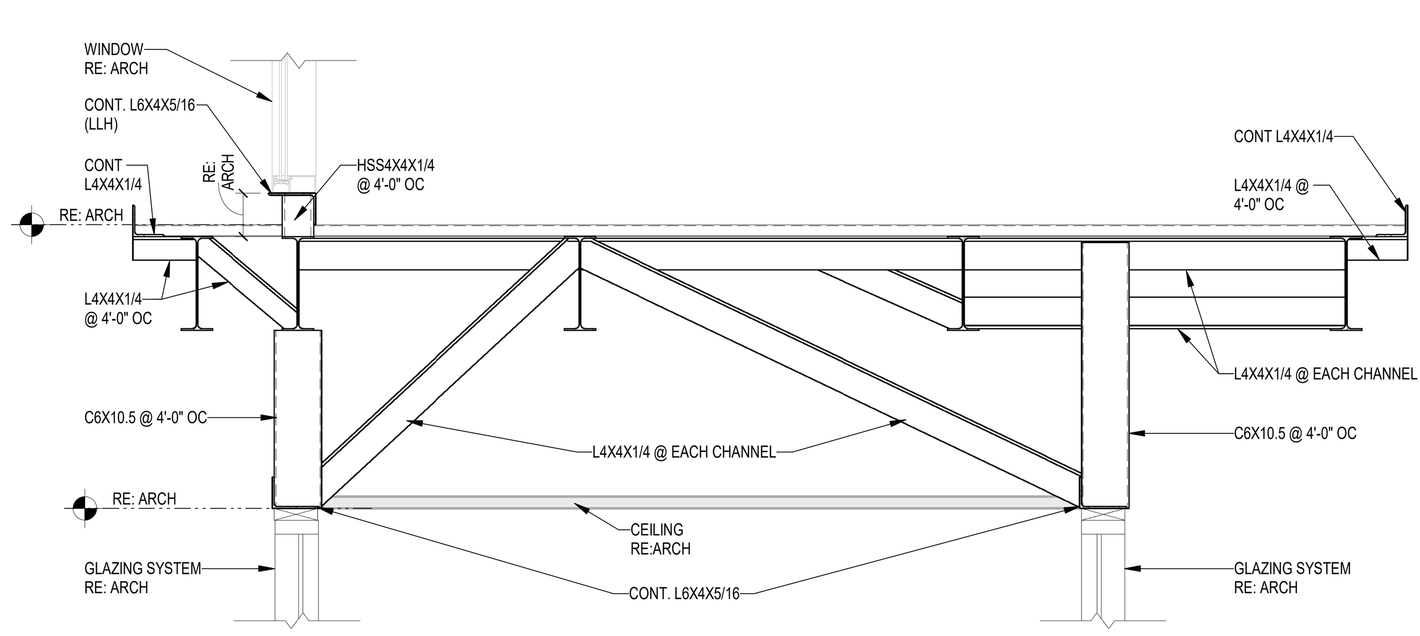

13 ENTRY VESTIBULE
3/4" = 1'-0"

FSGROUP® ARCHITECTS
16575 Village Drive
Houston Texas 77040
713 344 1752 PH
fsdesignbuild.com

PROJECT NAME

INFORMATION TECHNOLOGY BUILDING
EUGENE HEIMANN CIRCLE
FORT BEND COUNTY . RICHMOND . TEXAS

CONSULTANTS

Dally + ASSOCIATES
STRUCTURAL | CIVIL
9800 Richmond Avenue, Suite 460
Houston, Texas 77042
t 713 337 8881
Texas Registered Engineering Firm
F-003426

PROFESSIONAL SEAL

FRED DALLY
90904
05/15/2024

ISSUED FOR

ISSUED FOR PROPOSALS & PERMIT

REVISIONS

No.	DESCRIPTION	DATE

KEY PLAN

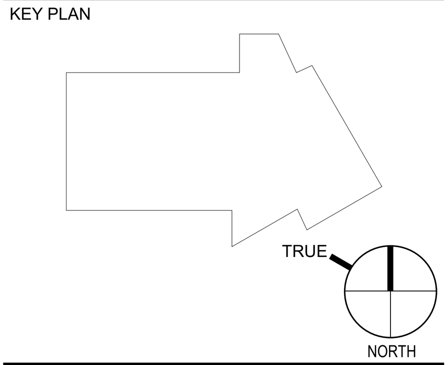

SHEET TITLE

COMPOSITE FRAMING DETAILS

SCALE 3/4" = 1'-0"

DATE 05/15/24

PROJECT NUMBER 2319

SHEET NUMBER

S601

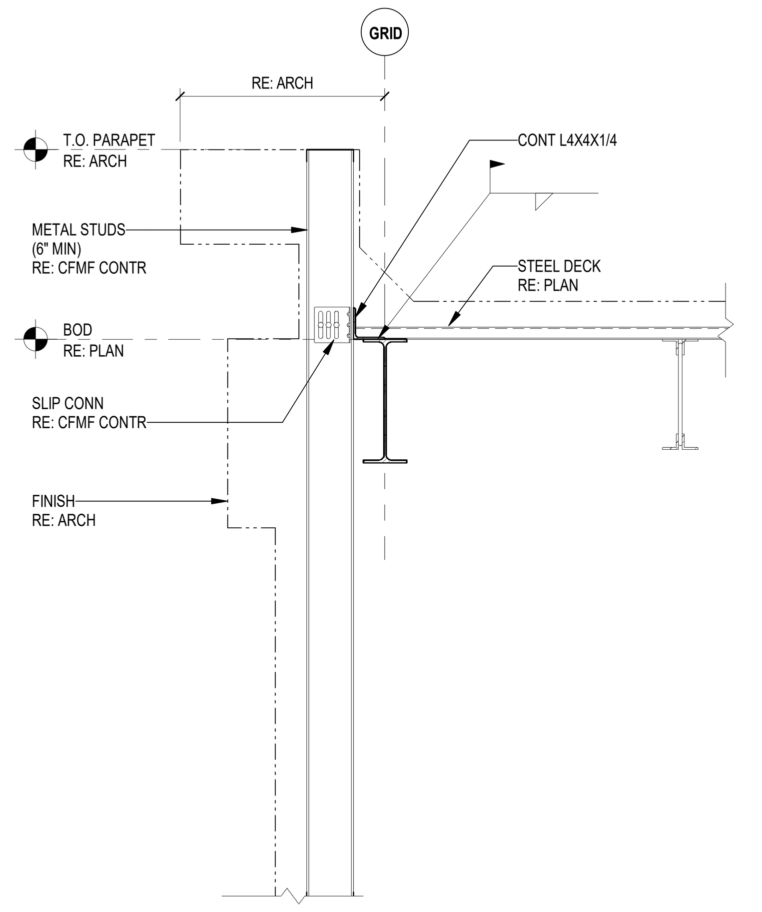

1 ROOF SECTION
3/4" = 1'-0"

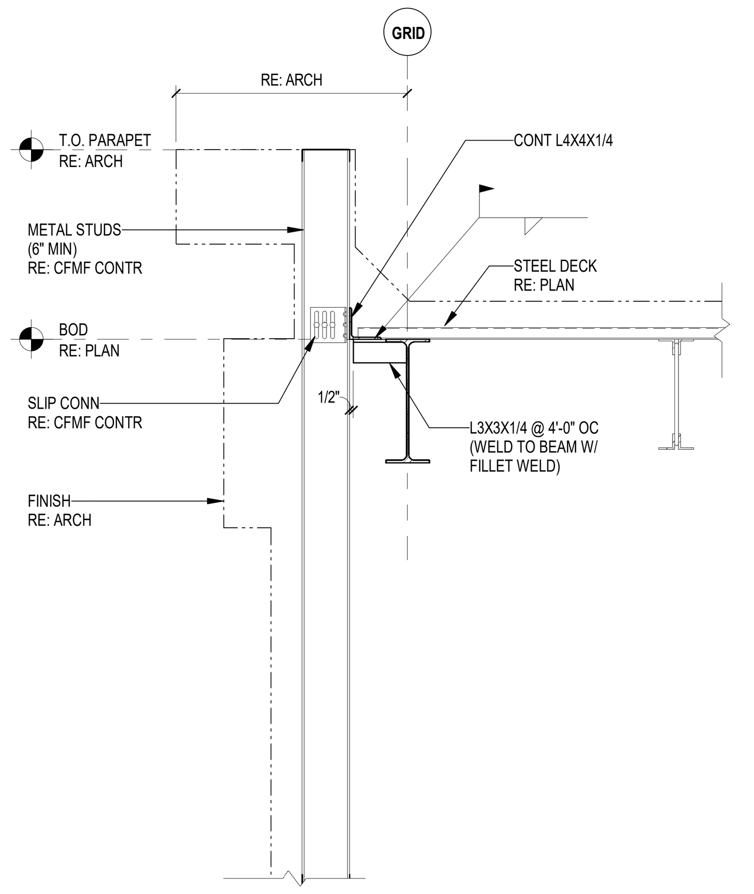

2 ROOF SECTION
3/4" = 1'-0"

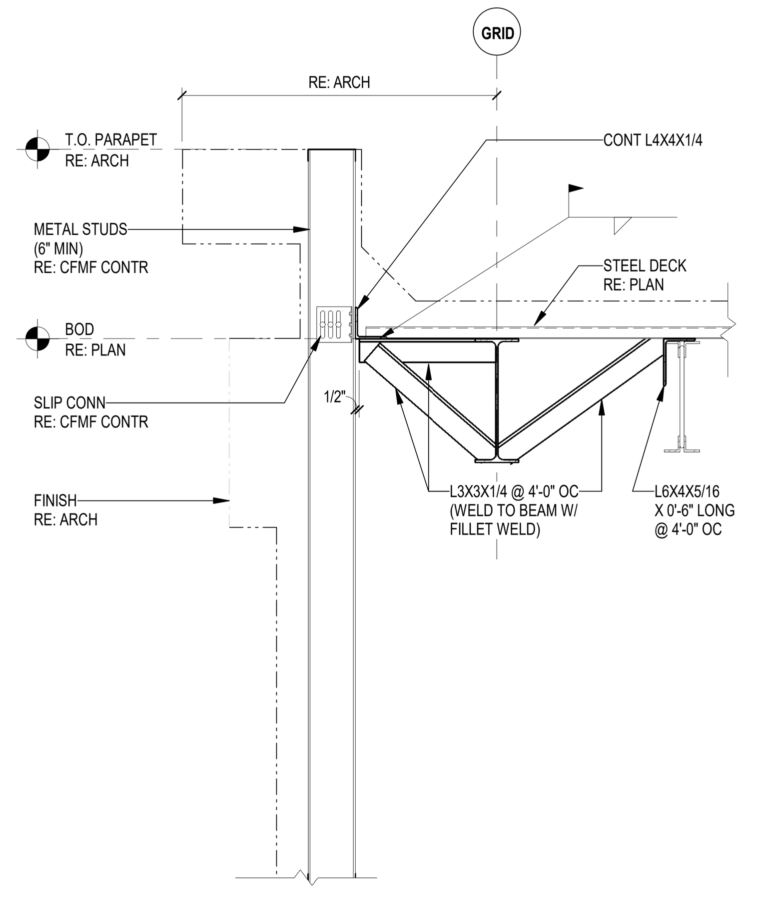

3 ROOF SECTION
3/4" = 1'-0"

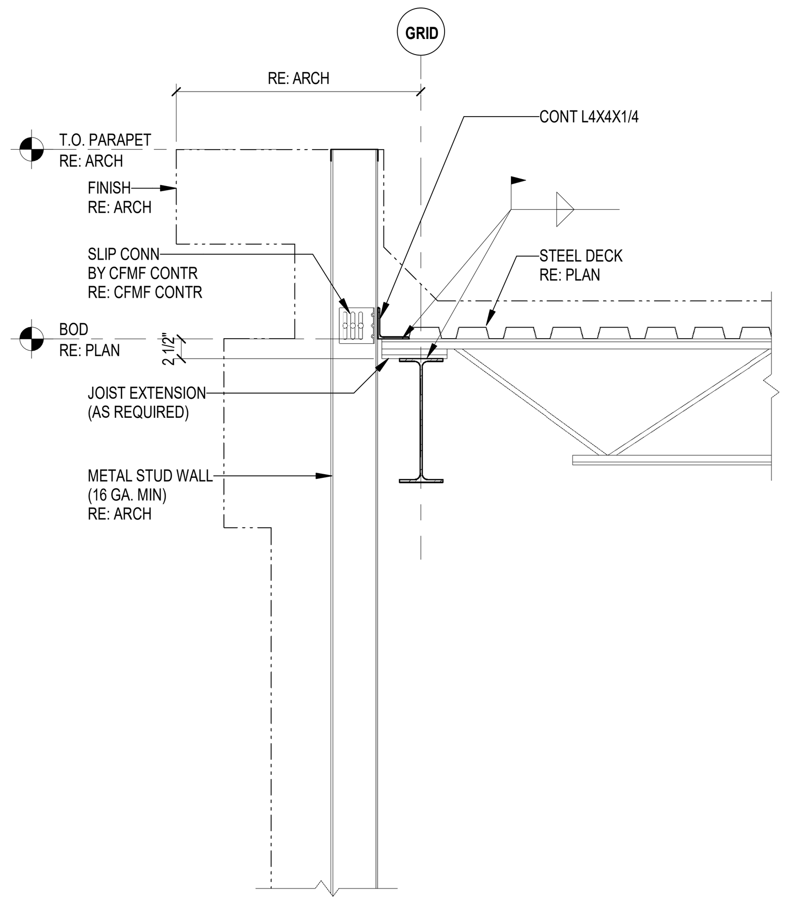

4 ROOF SECTION
3/4" = 1'-0"

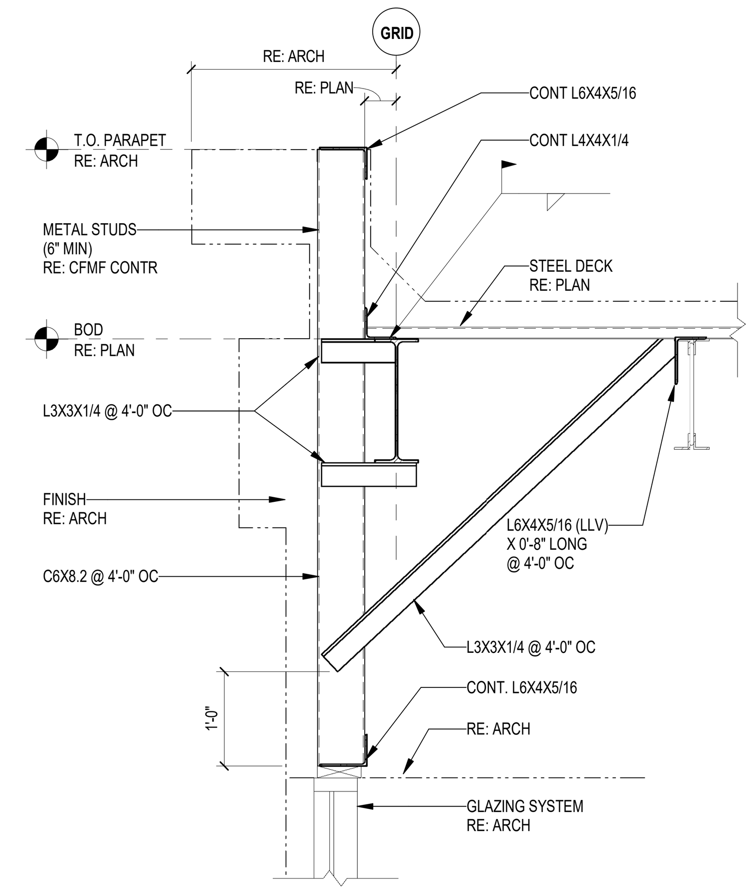

5 ROOF SECTION
3/4" = 1'-0"

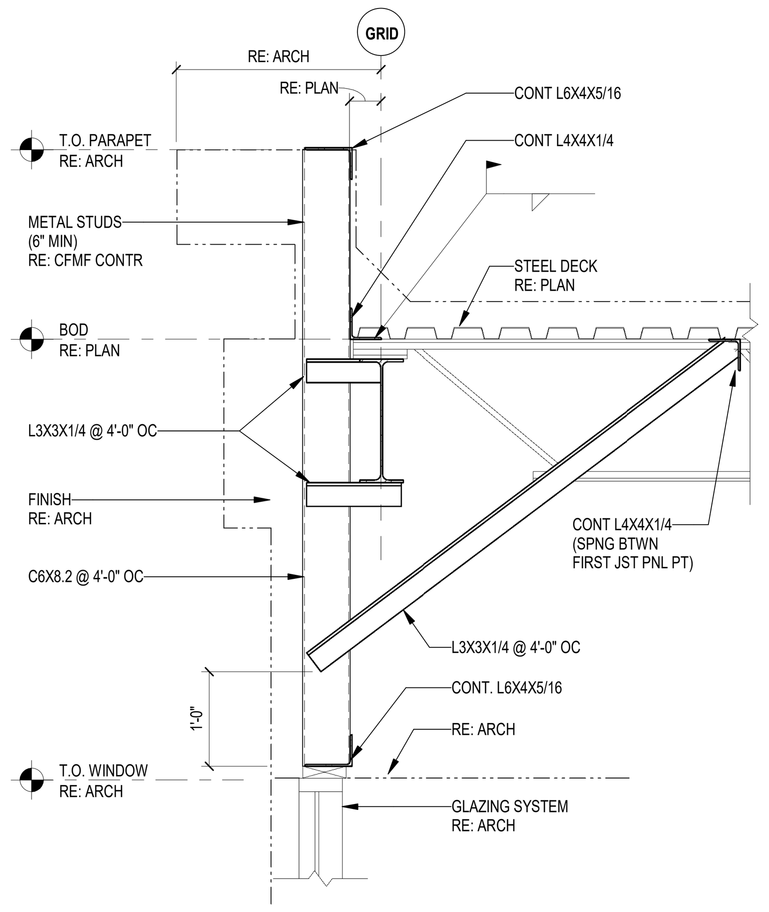

6 ROOF SECTION
3/4" = 1'-0"

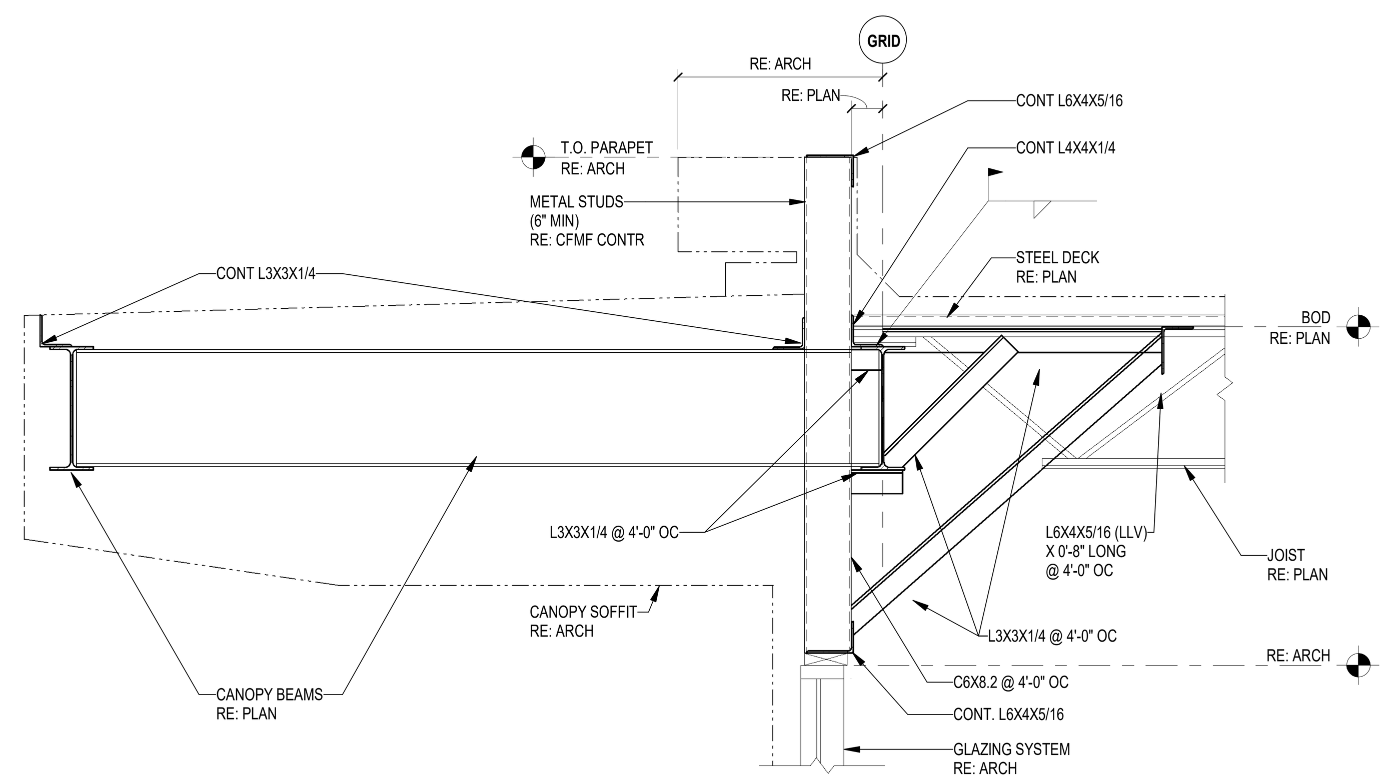

7 ROOF SECTION
3/4" = 1'-0"

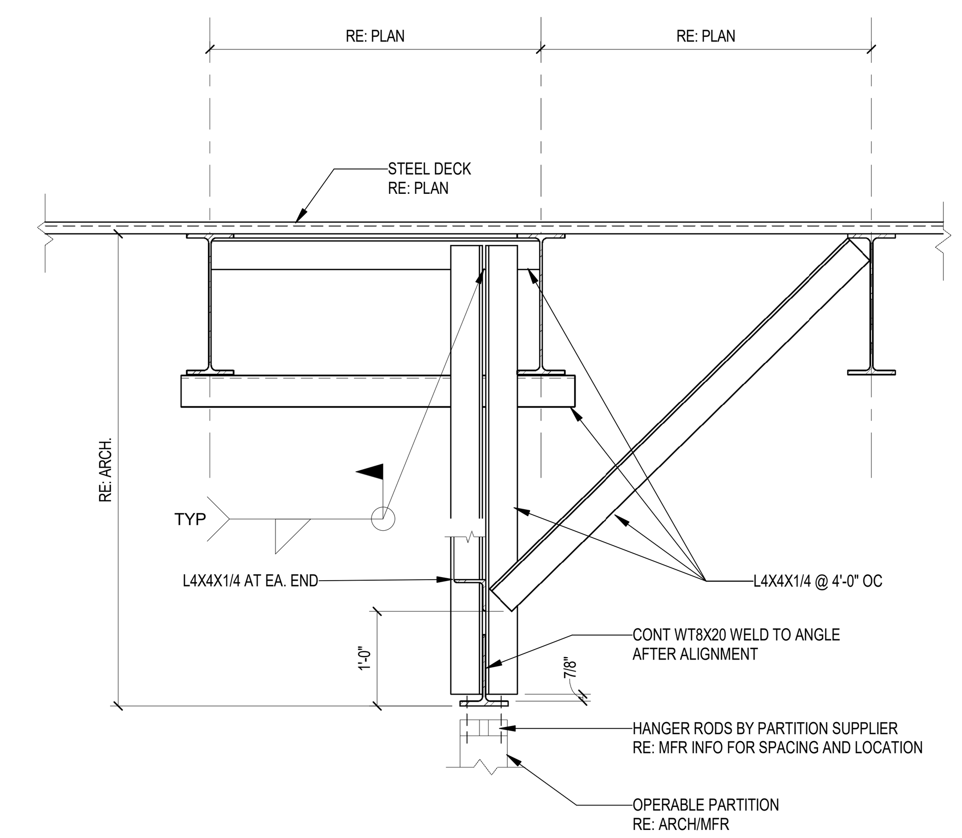

8 TYPICAL HANGING PARTITION
3/4" = 1'-0"

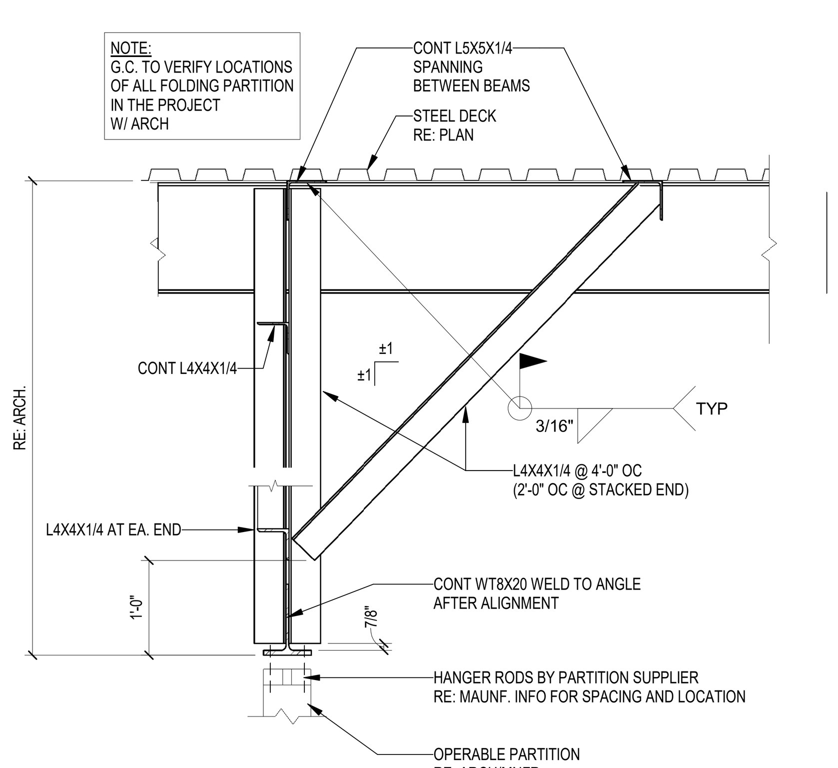

9 TYPICAL HANGING PARTITION
3/4" = 1'-0"

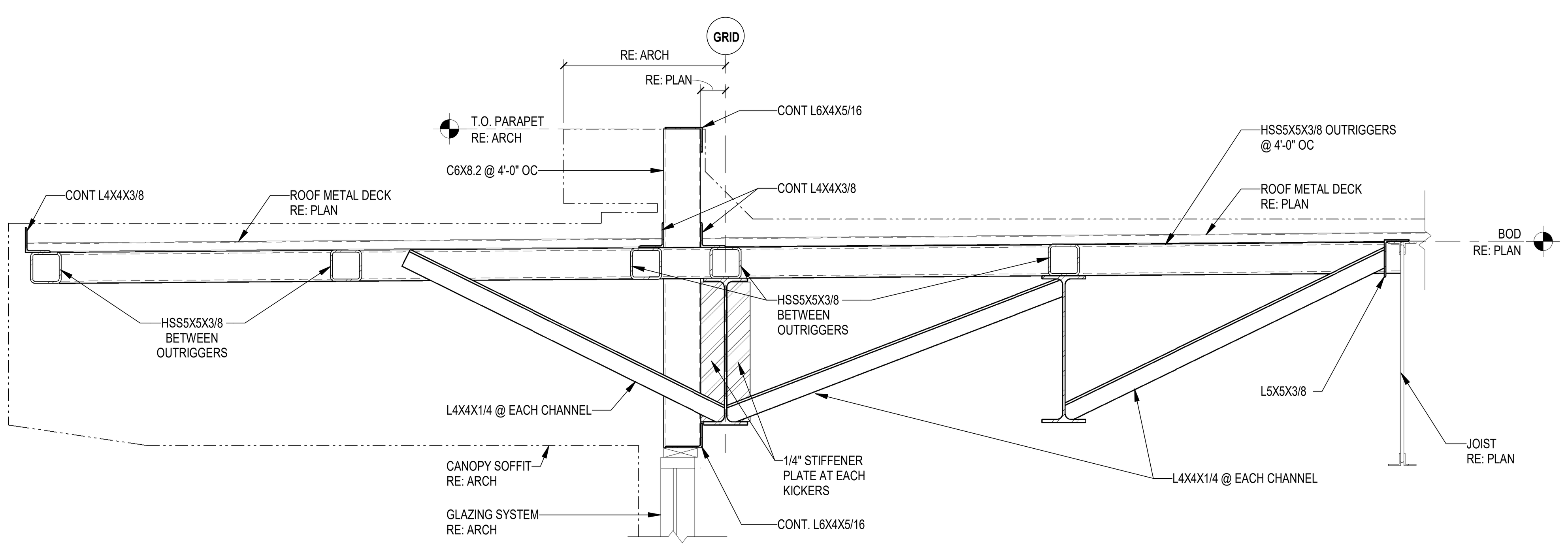

10 ROOF SECTION
3/4" = 1'-0"

FSGROUP®
ARCHITECTS
16575 Village Drive
Houston Texas 77040
713 344 1752 PH
fsdesignbuild.com

PROJECT NAME

THE STATE OF TEXAS FORT BEND COUNTY

INFORMATION TECHNOLOGY BUILDING
EUGENE HEIMANN CIRCLE
FORT BEND COUNTY . RICHMOND . TEXAS

CONSULTANTS

Dally + ASSOCIATES
STRUCTURAL | CIVIL
9800 Richmond Avenue, Suite 460
Houston, Texas 77042
t 713 337 8881
Texas Registered Engineering Firm
F-003426

PROFESSIONAL SEAL

STATE OF TEXAS
FRED DALLY
90904
05/15/2024

ISSUED FOR

ISSUED FOR PROPOSALS & PERMIT

REVISIONS

No.	DESCRIPTION	DATE

KEY PLAN

TRUE
NORTH

SHEET TITLE

FRAMING DETAILS

SCALE
3/4" = 1'-0"

DATE
05/15/24

PROJECT NUMBER
2319

SHEET NUMBER

S701

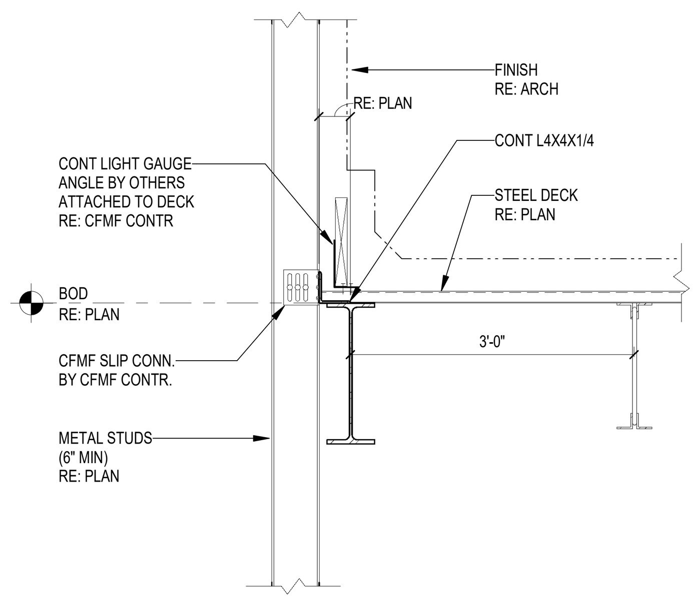

1 ROOF SECTION
3/4" = 1'-0"

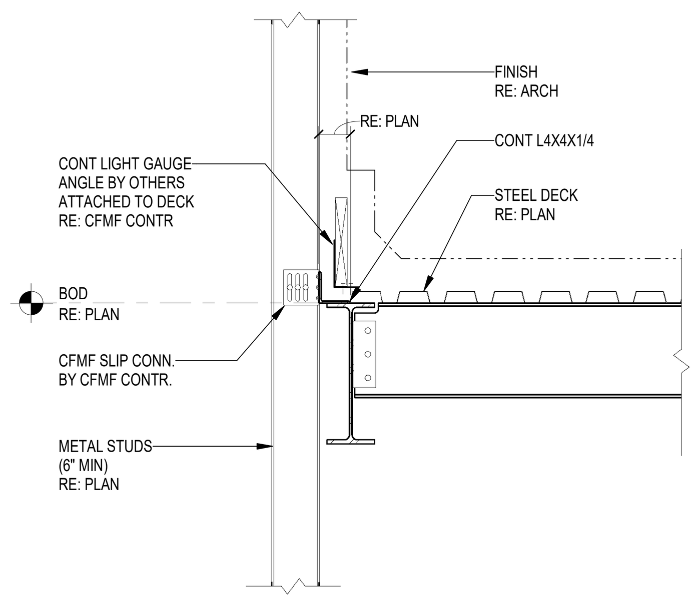

2 ROOF SECTION
3/4" = 1'-0"

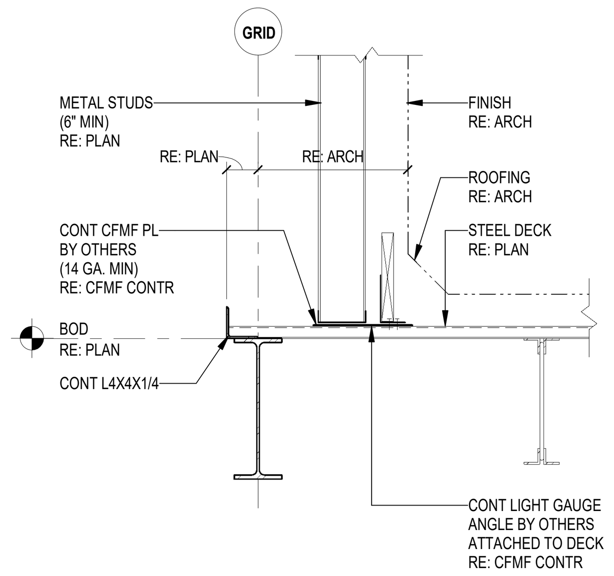

3 ROOF SECTION
3/4" = 1'-0"

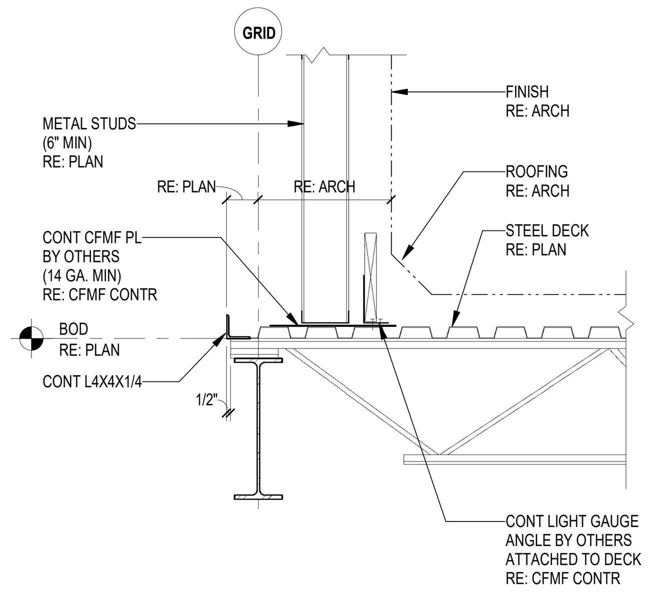

4 ROOF SECTION
3/4" = 1'-0"

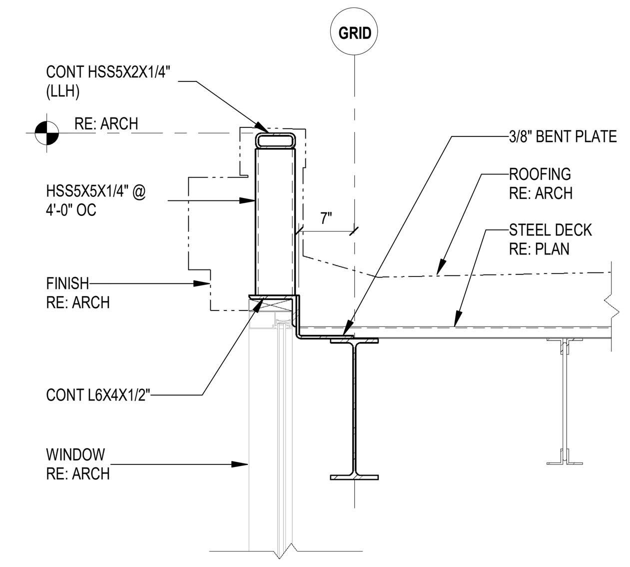

5 ROOF SECTION
3/4" = 1'-0"

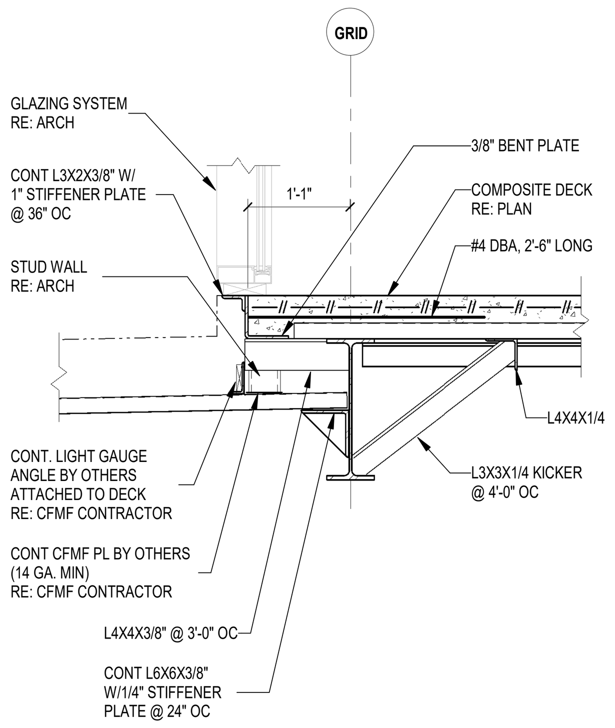

6 ROOF SECTION
3/4" = 1'-0"

FSGROUP
ARCHITECTS
16575 Village Drive
Houston Texas 77040
713 344 1752 PH
fsdesignbuild.com

PROJECT NAME

INFORMATION TECHNOLOGY BUILDING
EUGENE HEIMANN CIRCLE
FORT BEND COUNTY . RICHMOND . TEXAS

CONSULTANTS

Dally
+ ASSOCIATES
STRUCTURAL | CIVIL
9800 Richmond Avenue, Suite 460
Houston, Texas 77042
t 713 337 8881
Texas Registered Engineering Firm
F-003426

PROFESSIONAL SEAL

FRED DALLY
90904
05/15/2024

ISSUED FOR
ISSUED FOR PROPOSALS & PERMIT

REVISIONS

No.	DESCRIPTION	DATE

KEY PLAN

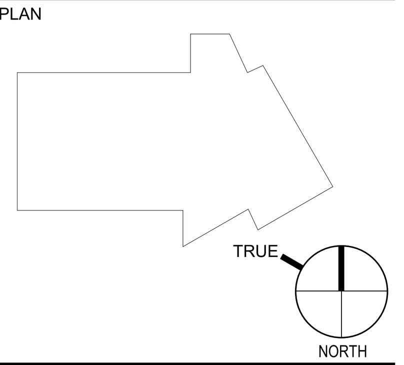

SHEET TITLE
LOW ROOF FRAMING DETAILS

SCALE
3/4" = 1'-0"

DATE
05/15/24

PROJECT NUMBER
2319

SHEET NUMBER
S702

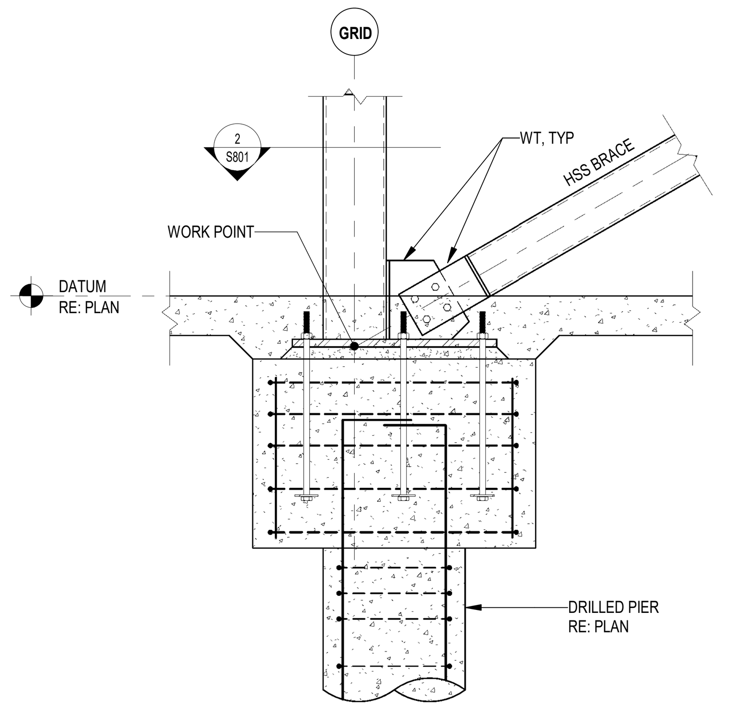

1 SECTION
3/4" = 1'-0"

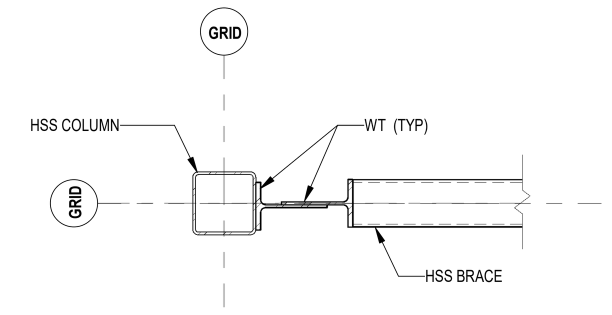

2 SECTION
3/4" = 1'-0"

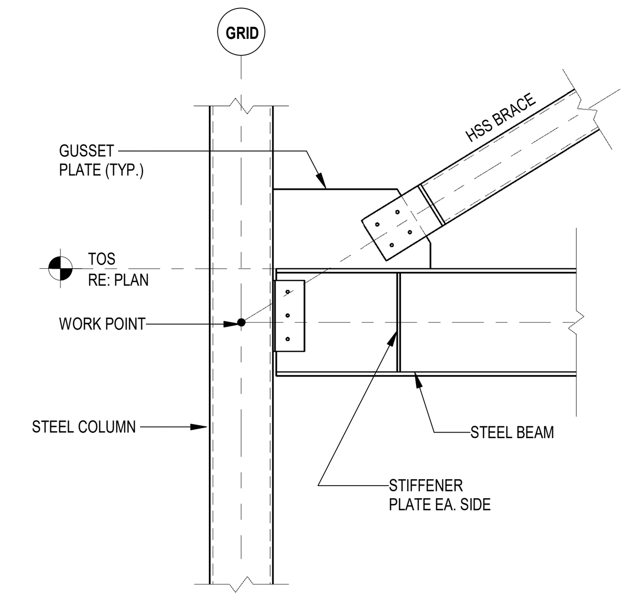

3 SECTION
3/4" = 1'-0"

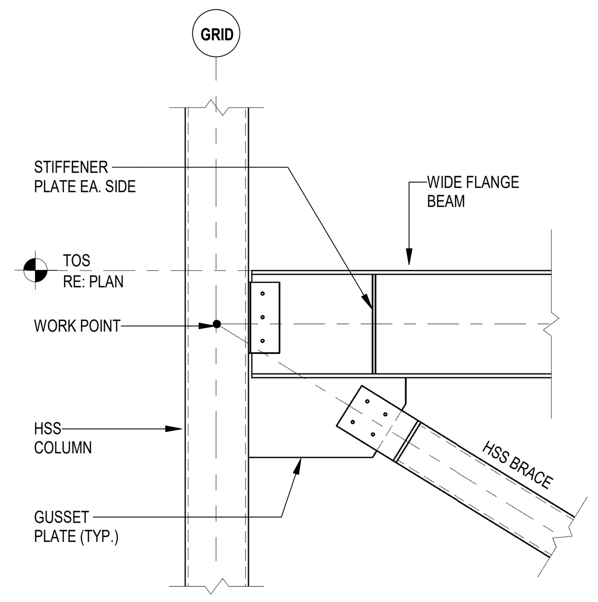

4 SECTION
3/4" = 1'-0"

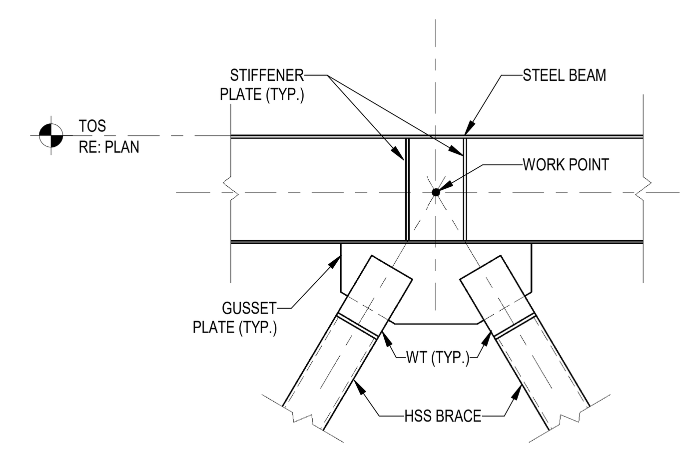

5 SECTION
3/4" = 1'-0"

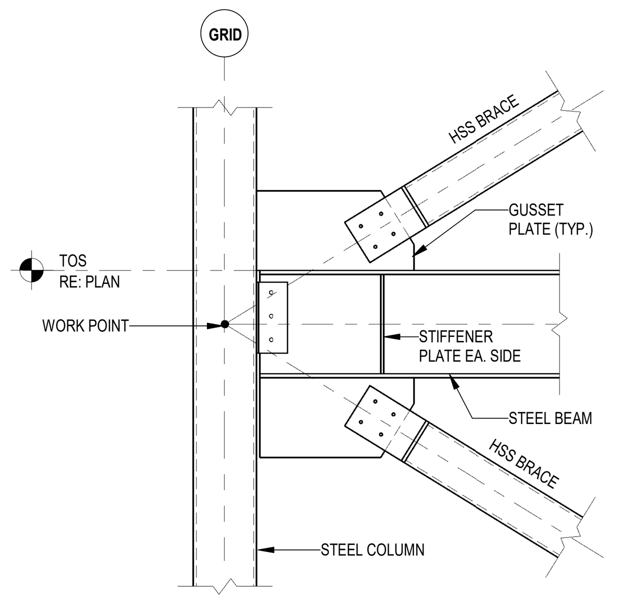

6 SECTION
3/4" = 1'-0"

NOTES:

1. ALL WELDS TO BE SIZED BY STEEL FABRICATOR.
2. BOLTED CONNECTIONS MAY BE SUBSTITUTED (WHERE POSSIBLE) PER FABRICATORS PREFERENCE.

FSGROUP®
ARCHITECTS
16575 Village Drive
Houston Texas 77040
713 344 1752 PH
fsdesignbuild.com

PROJECT NAME

THE STATE OF TEXAS FORT BEND COUNTY

INFORMATION TECHNOLOGY BUILDING
EUGENE HEIMANN CIRCLE
FORT BEND COUNTY . RICHMOND . TEXAS

CONSULTANTS

Dally
+ ASSOCIATES
STRUCTURAL | CIVIL
9800 Richmond Avenue, Suite 460
Houston, Texas 77042
t 713 337 8881
Texas Registered Engineering Firm
F-003426

PROFESSIONAL SEAL

STATE OF TEXAS
FRED DALLY
90904
05/15/2024

ISSUED FOR
ISSUED FOR PROPOSALS & PERMIT

REVISIONS

No.	DESCRIPTION	DATE

KEY PLAN

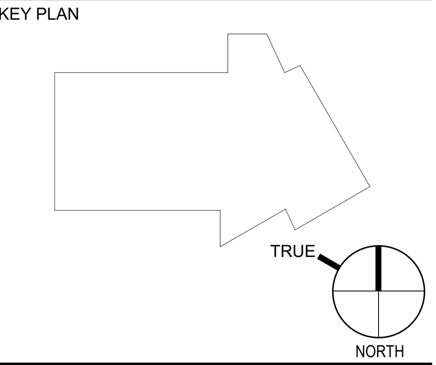

SHEET TITLE
BRACE ELEVATIONS & DETAILS

SCALE
3/4" = 1'-0"

DATE
05/15/24

PROJECT NUMBER
2319

SHEET NUMBER
S801

E D C B A

4

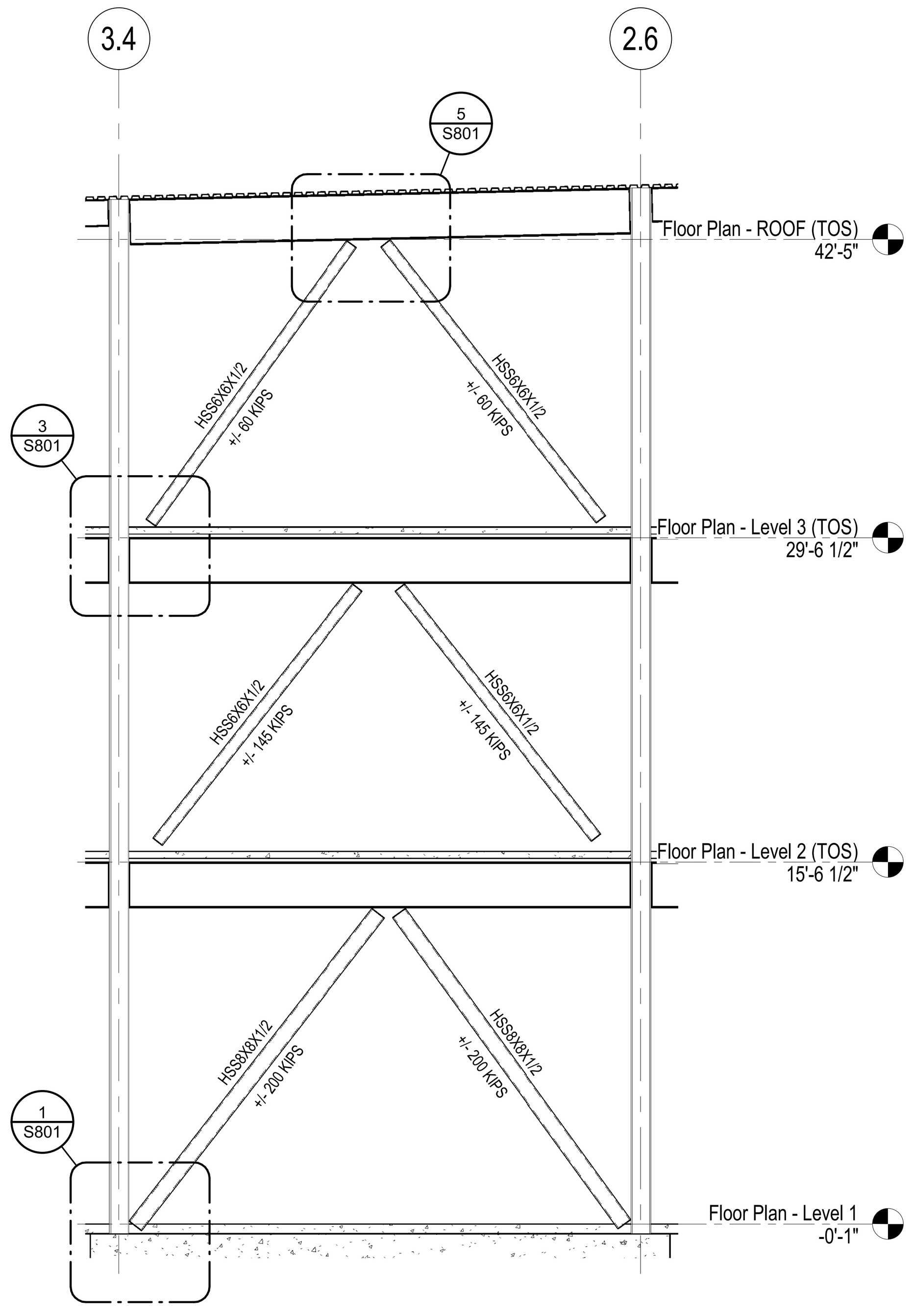

1 BRACE ELEVATION
3/16" = 1'-0"

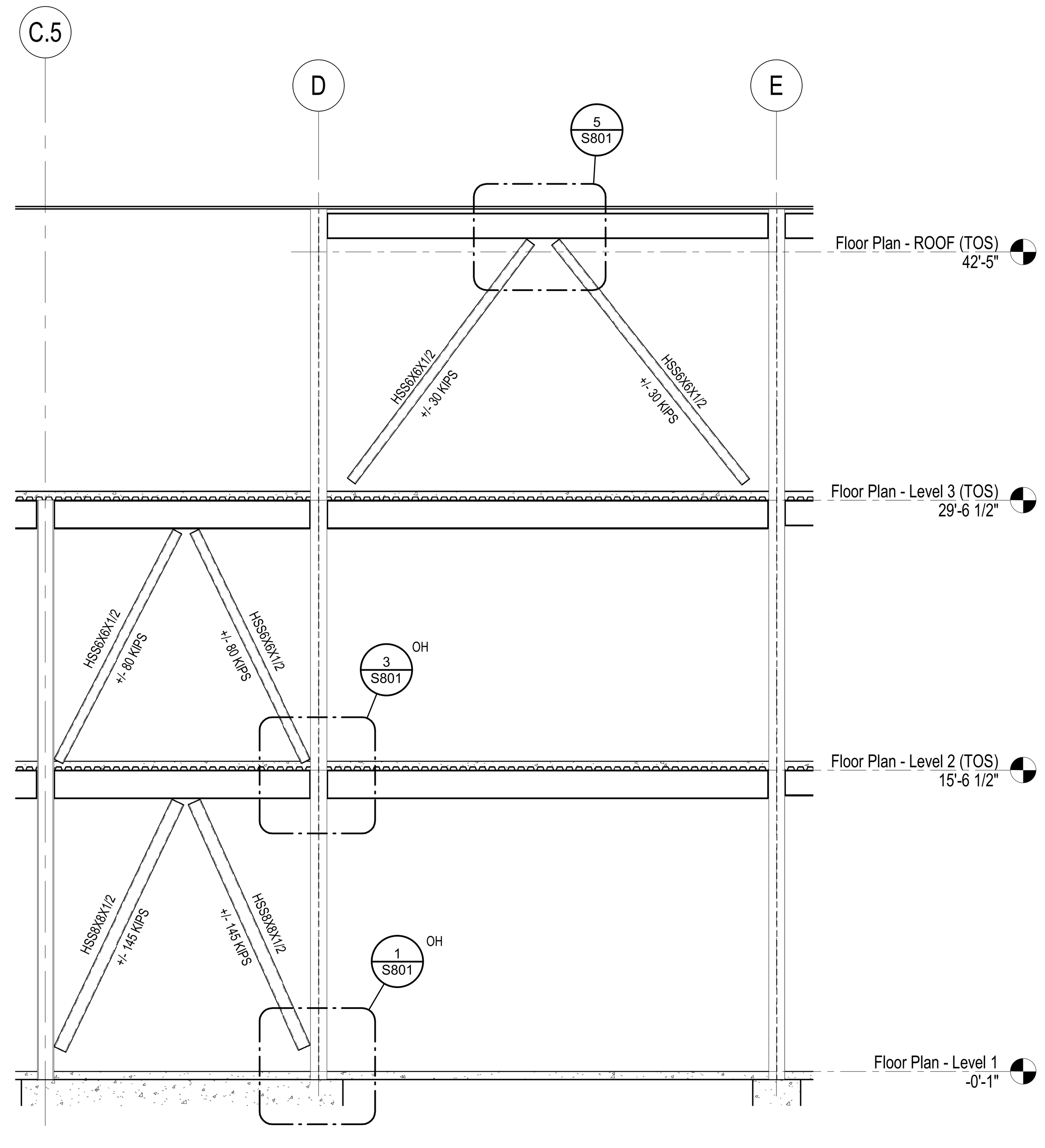

2 BRACE ELEVATION
3/16" = 1'-0"

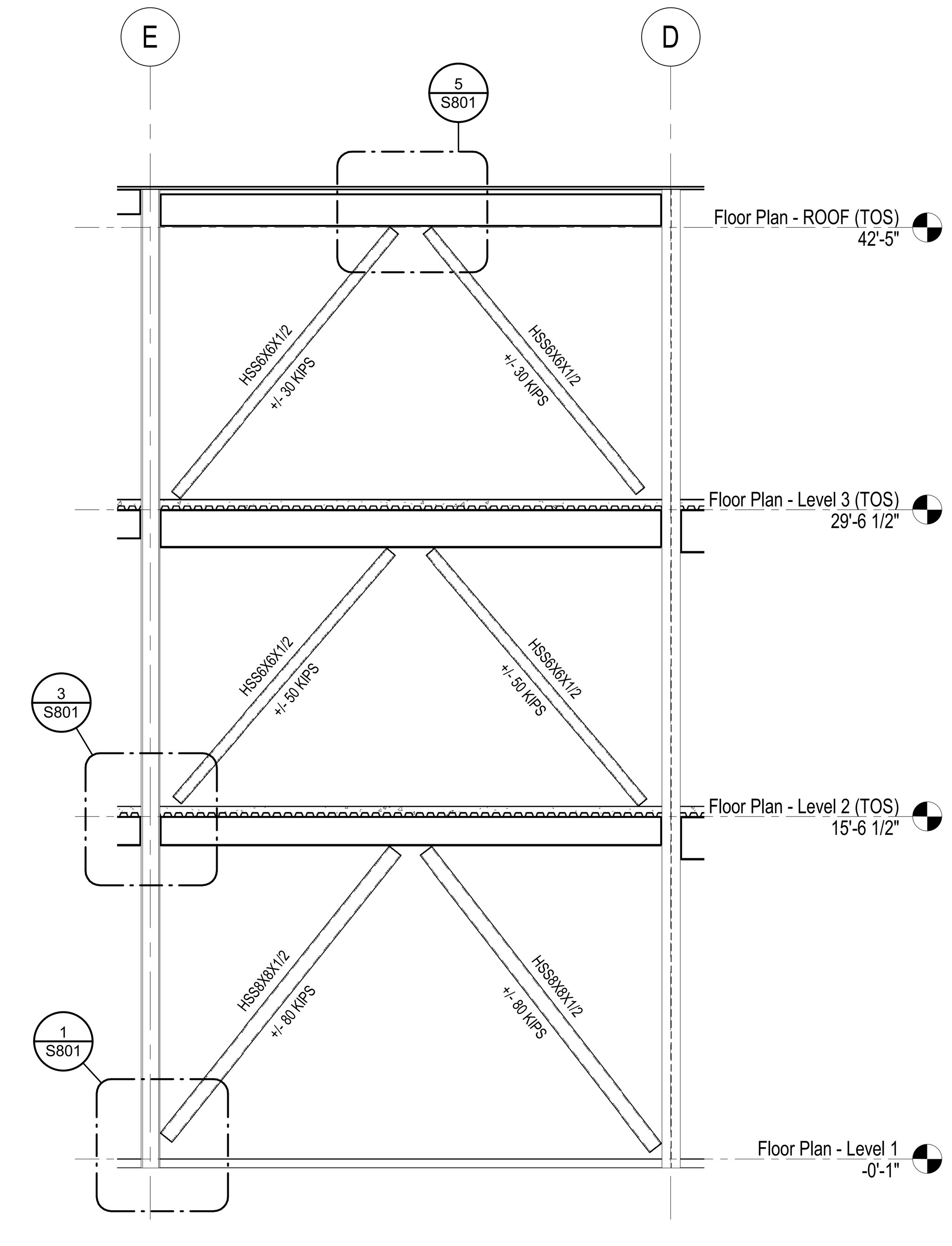

3 BRACE ELEVATION
3/16" = 1'-0"

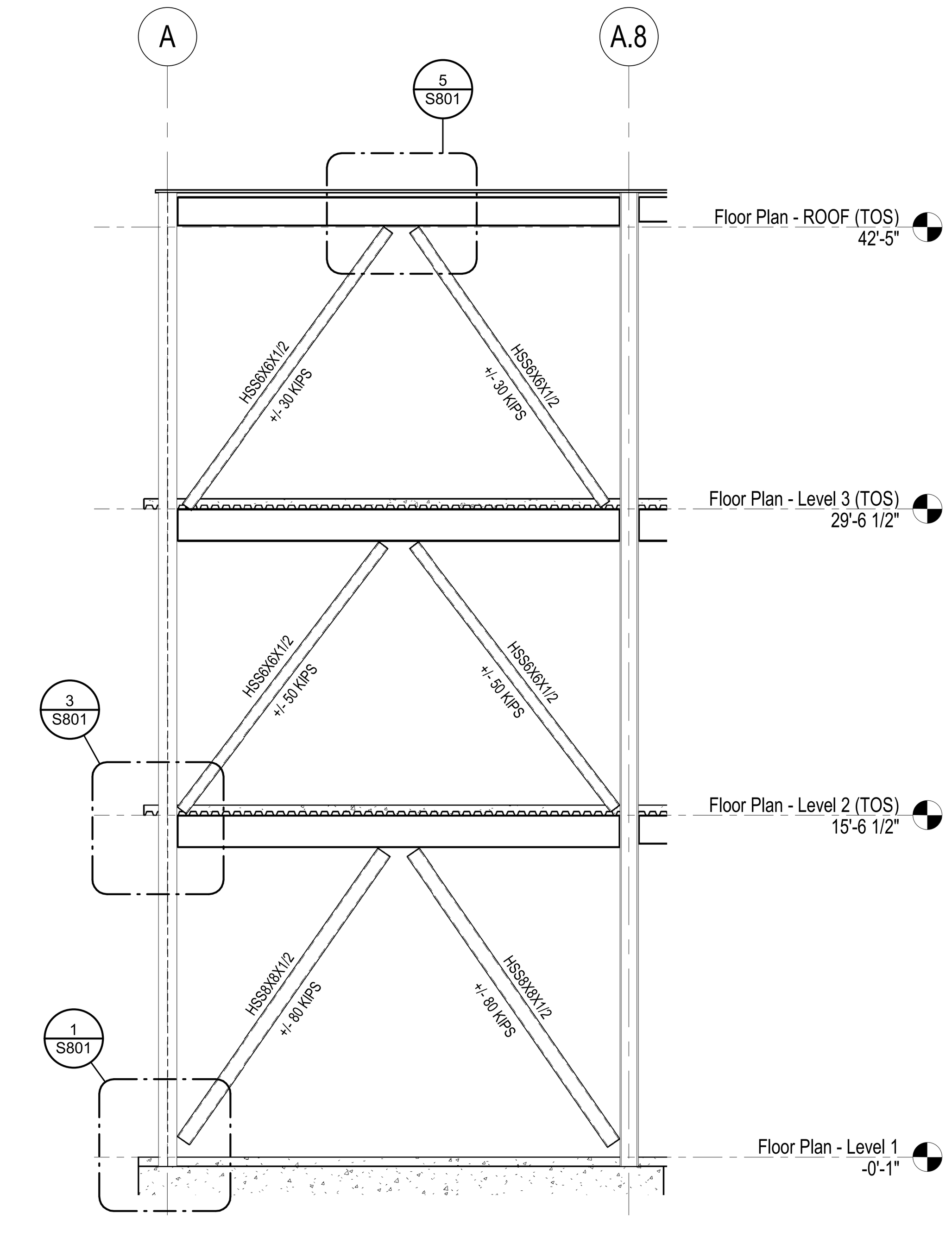

4 BRACE ELEVATION
3/16" = 1'-0"

3

2

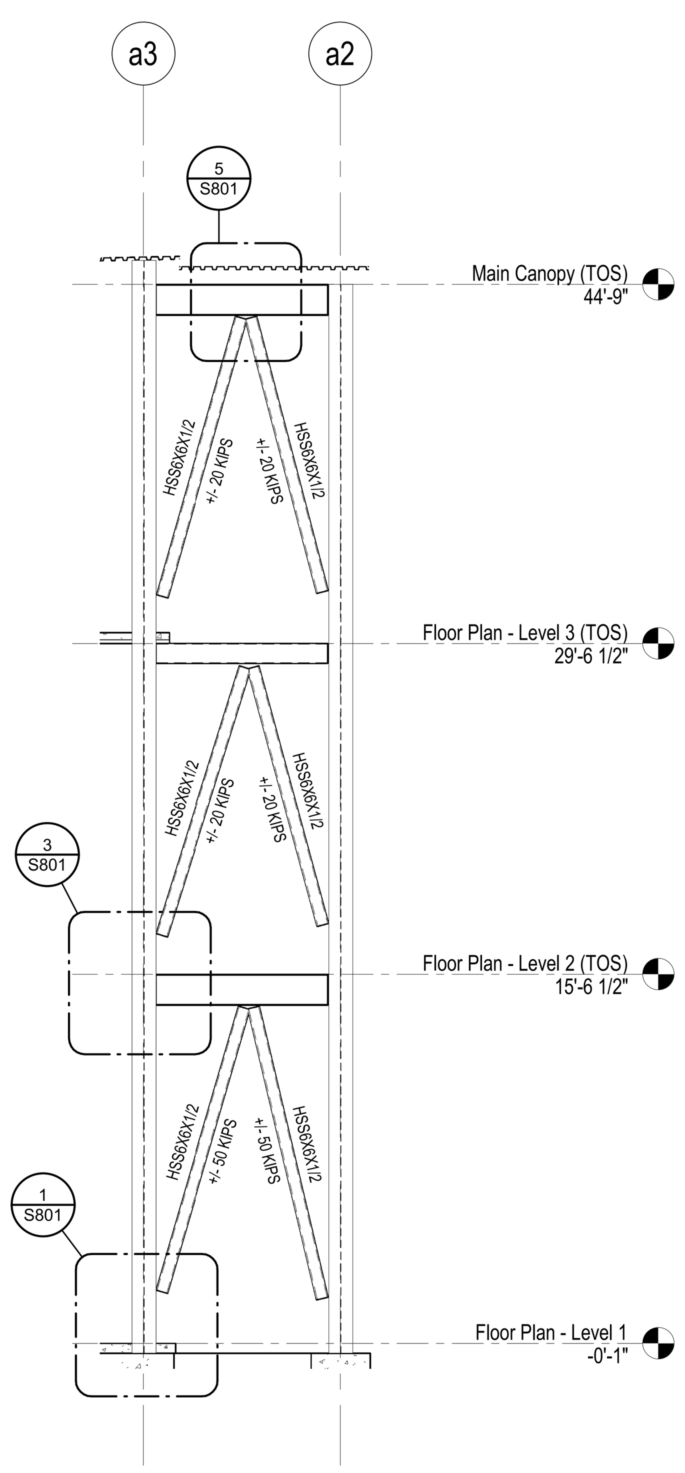

5 BRACE ELEVATION
3/16" = 1'-0"

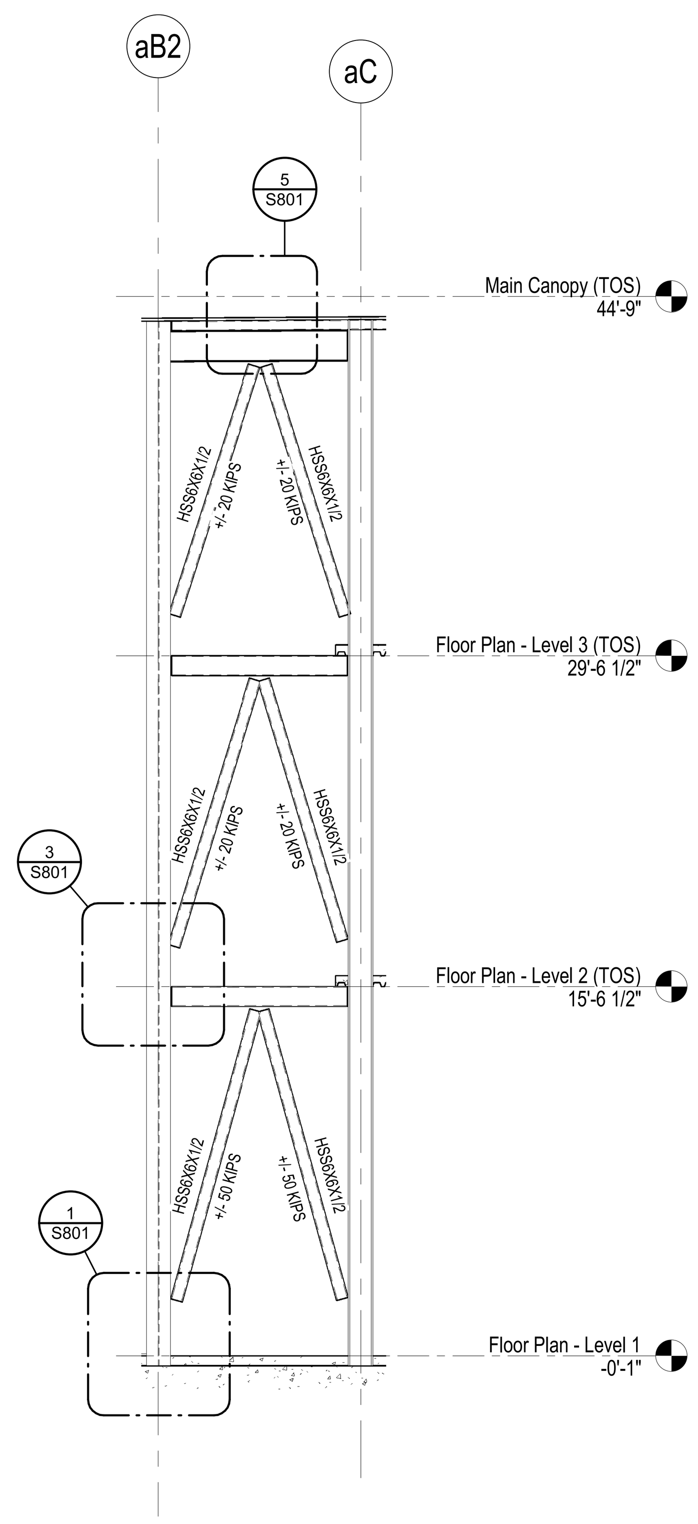

6 BRACE ELEVATION
3/16" = 1'-0"

1

E D C B A

FSGROUP®
ARCHITECTS
16575 Village Drive
Houston Texas 77040
713 344 1752 PH
fsdesignbuild.com

PROJECT NAME

THE STATE OF TEXAS
FORT BEND COUNTY

INFORMATION TECHNOLOGY BUILDING
EUGENE HEIMANN CIRCLE
FORT BEND COUNTY . RICHMOND . TEXAS

CONSULTANTS

Dally
+ ASSOCIATES
STRUCTURAL | CIVIL
9800 Richmond Avenue, Suite 460
Houston, Texas 77042
t 713 337 8881
Texas Registered Engineering Firm
F-003426

PROFESSIONAL SEAL

STATE OF TEXAS
FRED DALLY
90904
05/15/2024

ISSUED FOR
ISSUED FOR PROPOSALS & PERMIT

REVISIONS

No.	DESCRIPTION	DATE

KEY PLAN

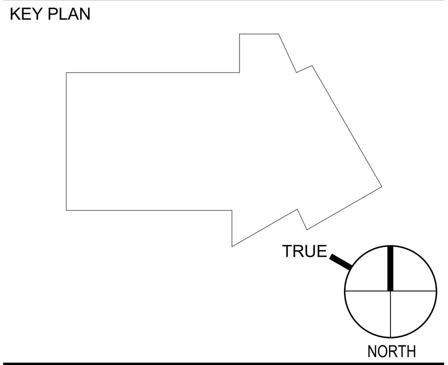

SHEET TITLE
BRACE ELEVATIONS

SCALE
3/16" = 1'-0"

DATE
05/15/24

PROJECT NUMBER
2319

SHEET NUMBER
S802

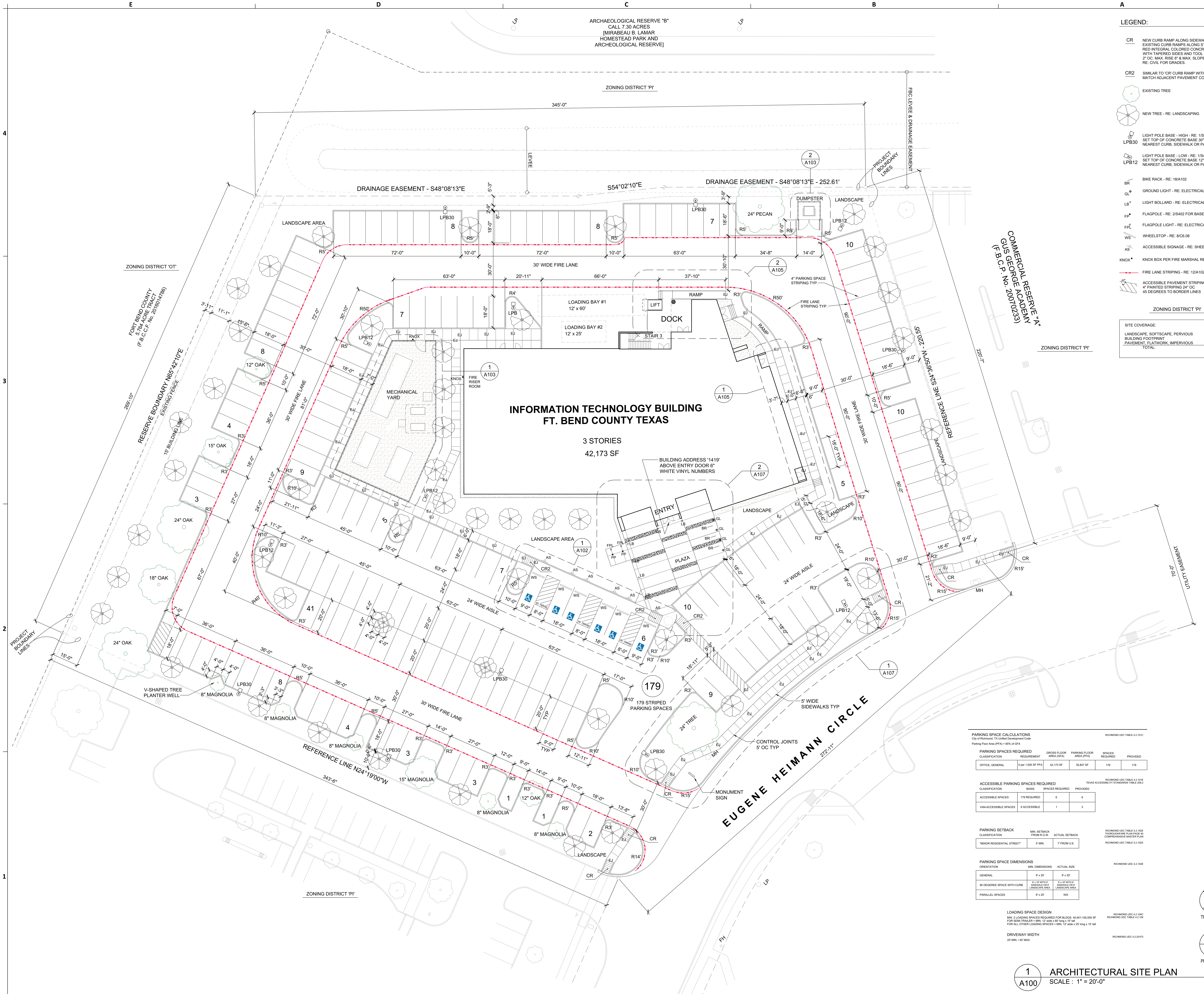

LEGEND:

- **CR** — NEW CURB RAMP ALONG SIDEWALK TO MATCH EXISTING CURB RAMPS ALONG STREET. PROVIDE RED INTEGRAL COLORED CONCRETE CURB RAMP WITH TAPERED SIDES AND TOOL JOINT GROOVES 2" OC. MAX. RISE 6" & MAX. SLOPE 1:12. RE: CIVIL FOR GRADES.
- **CR2** — SIMILAR TO 'CR' CURB RAMP WITH CONCRETE TO MATCH ADJACENT PAVEMENT COLOR.
- EXISTING TREE
- NEW TREE - RE: LANDSCAPING
- **LPB30** — LIGHT POLE BASE - HIGH - RE: 1/S402 SET TOP OF CONCRETE BASE 30" ABOVE NEAREST CURB, SIDEWALK OR PAVEMENT
- **LPB12** — LIGHT POLE BASE - LOW - RE: 1/S402 SET TOP OF CONCRETE BASE 12" ABOVE NEAREST CURB, SIDEWALK OR PAVEMENT
- **BR** — BIKE RACK - RE: 18/A102
- **GL** — GROUND LIGHT - RE: ELECTRICAL
- **LB** — LIGHT BOLLARD - RE: ELECTRICAL
- **FP** — FLAGPOLE - RE: 2/S402 FOR BASE
- **FPL** — FLAGPOLE LIGHT - RE: ELECTRICAL
- **WS** — WHEELSTOP - RE: 8/C6.08
- **AS** — ACCESSIBLE SIGNAGE - RE: SHEET A102
- **KNOX** — KNOX BOX PER FIRE MARSHAL REQUIREMENTS
- FIRE LANE STRIPING - RE: 12/A102
- ACCESSIBLE PAVEMENT STRIPING 4" PAINTED STRIPING 24" OC 45 DEGREES TO BORDER LINES

ZONING DISTRICT 'PI'

SITE COVERAGE:	
LANDSCAPE, SOFTSCAPE, PERVIOUS	26,922 SF
BUILDING FOOTPRINT	16,208 SF
PAVEMENT, FLATWORK, IMPERVIOUS	92,213 SF
TOTAL:	135,343 SF
	3.1 AC

PARKING SPACE CALCULATIONS

City of Richmond, TX Unified Development Code

Parking Floor Area (PFA) = 85% of GFA

RICHMOND UDC TABLE 4.2.101C

PARKING SPACES REQUIRED

CLASSIFICATION	REQUIREMENT	GROSS FLOOR AREA (GFA)	PARKING FLOOR AREA (PFA)	SPACES REQUIRED	PROVIDED
OFFICE, GENERAL	5 per 1,000 SF PFA	42,173 SF	35,847 SF	179	179

ACCESSIBLE PARKING SPACES REQUIRED

RICHMOND UDC TABLE 4.2.101E
TEXAS ACCESSIBILITY STANDARDS TABLE 208.2

CLASSIFICATION	BASIS	SPACES REQUIRED	PROVIDED
ACCESSIBLE SPACES	179 REQUIRED	6	6
VAN-ACCESSIBLE SPACES	6 ACCESSIBLE	1	3

PARKING SETBACK

RICHMOND UDC TABLE 4.2.102E
THOROUGHFARE PLAN PAGE 40
COMPREHENSIVE MASTER PLAN

RICHMOND UDC TABLE 4.2.102A

CLASSIFICATION	MIN. SETBACK FROM R.O.W.	ACTUAL SETBACK
"MINOR RESIDENTIAL STREET"	5' MIN.	7' FROM U.E.

PARKING SPACE DIMENSIONS

RICHMOND UDC 4.2.102E

ORIENTATION	MIN. DIMENSIONS	ACTUAL SIZE
GENERAL	9' x 20'	9' x 20'
90 DEGEREE SPACE WITH CURB	9' x 18' WITH 6' SIDEWALK OR 8' LANDSCAPE AREA	9' x 18' WITH 6' SIDEWALK OR 8' LANDSCAPE AREA
PARALLEL SPACES	8' x 20'	N/A

LOADING SPACE DESIGN

RICHMOND UDC 4.2.104C
RICHMOND UDC TABLE 4.2.104

MIN. 2 LOADING SPACES REQUIRED FOR BLDGS. 40,001-100,000 SF
FOR SEMI-TRAILER = MIN. 12' wide x 60' long x 15' tall
FOR ALL OTHER LOADING SPACES = MIN. 12' wide x 25' long x 15' tall

DRIVEWAY WIDTH

RICHMOND UDC 4.2.201F3

25' MIN. / 45' MAX.

TRUE NORTH

PLAN NORTH

1 / A100 — ARCHITECTURAL SITE PLAN
SCALE : 1" = 20'-0"

FSGROUP
TEAM+BUILD
16575 Village Drive
Jersey Village Texas 77040
713 344 1752 Office
www.fsdesignbuild.com

PROJECT NAME

INFORMATION TECHNOLGY BUILDING
EUGENE HEIMANN CIRCLE
FORT BEND COUNTY . TEXAS

CONSULTANTS

PROFESSIONAL SEAL

5/15/2024

ISSUED FOR

ISSUED FOR PROPOSALS AND PERMIT

REVISIONS

No.	DESCRIPTION	DATE

KEY PLAN

TRUE NORTH

SHEET TITLE

SITE PLAN

SCALE	As Indicated
DATE	05/15/2024
PROJECT NUMBER	2319
SHEET NUMBER	A100

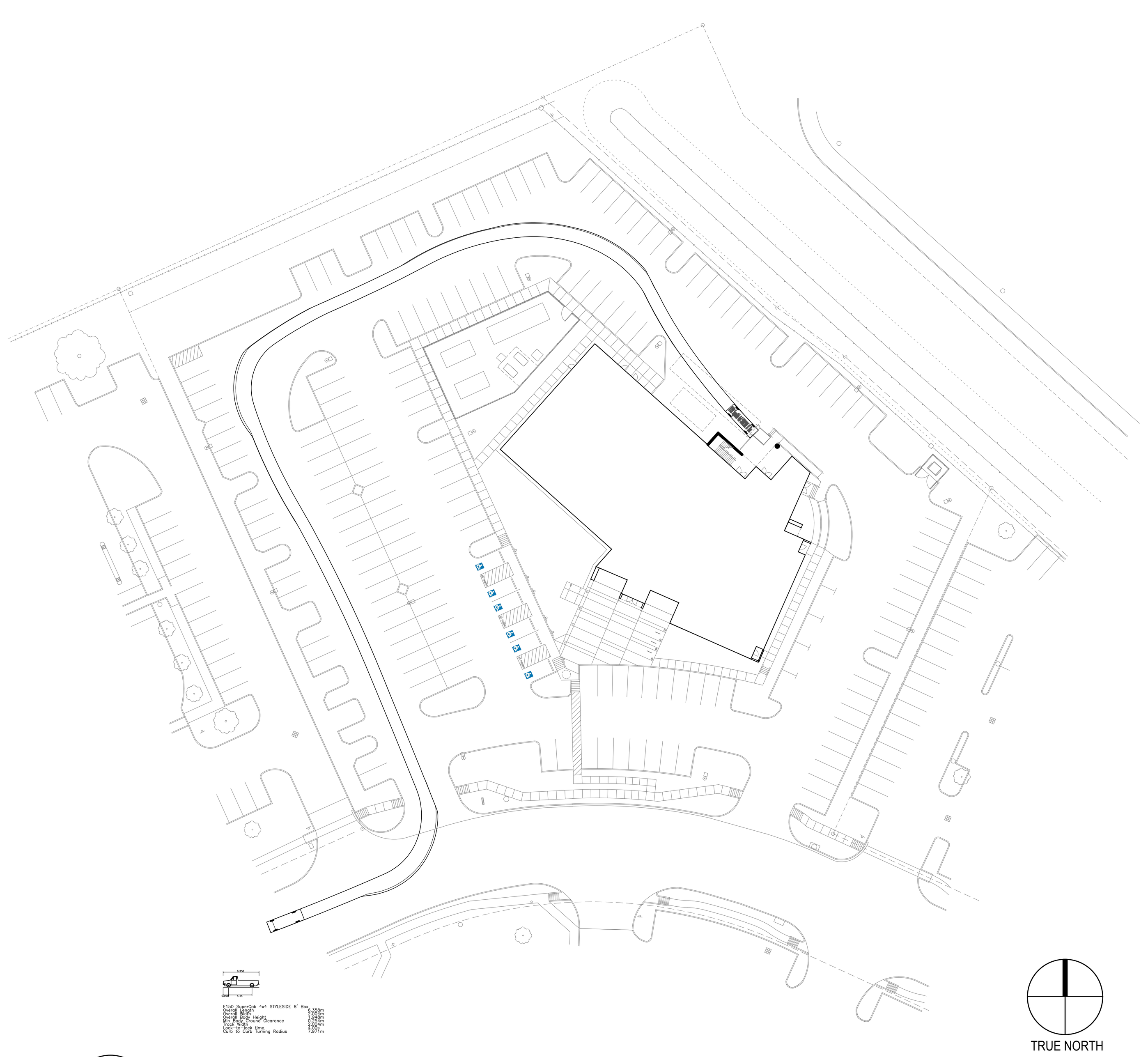

6 A101 TRUCK PATH - CITY DELIVERY TRUCK - LOADING DOCK EXIT
SCALE : 1" = 60'-0"

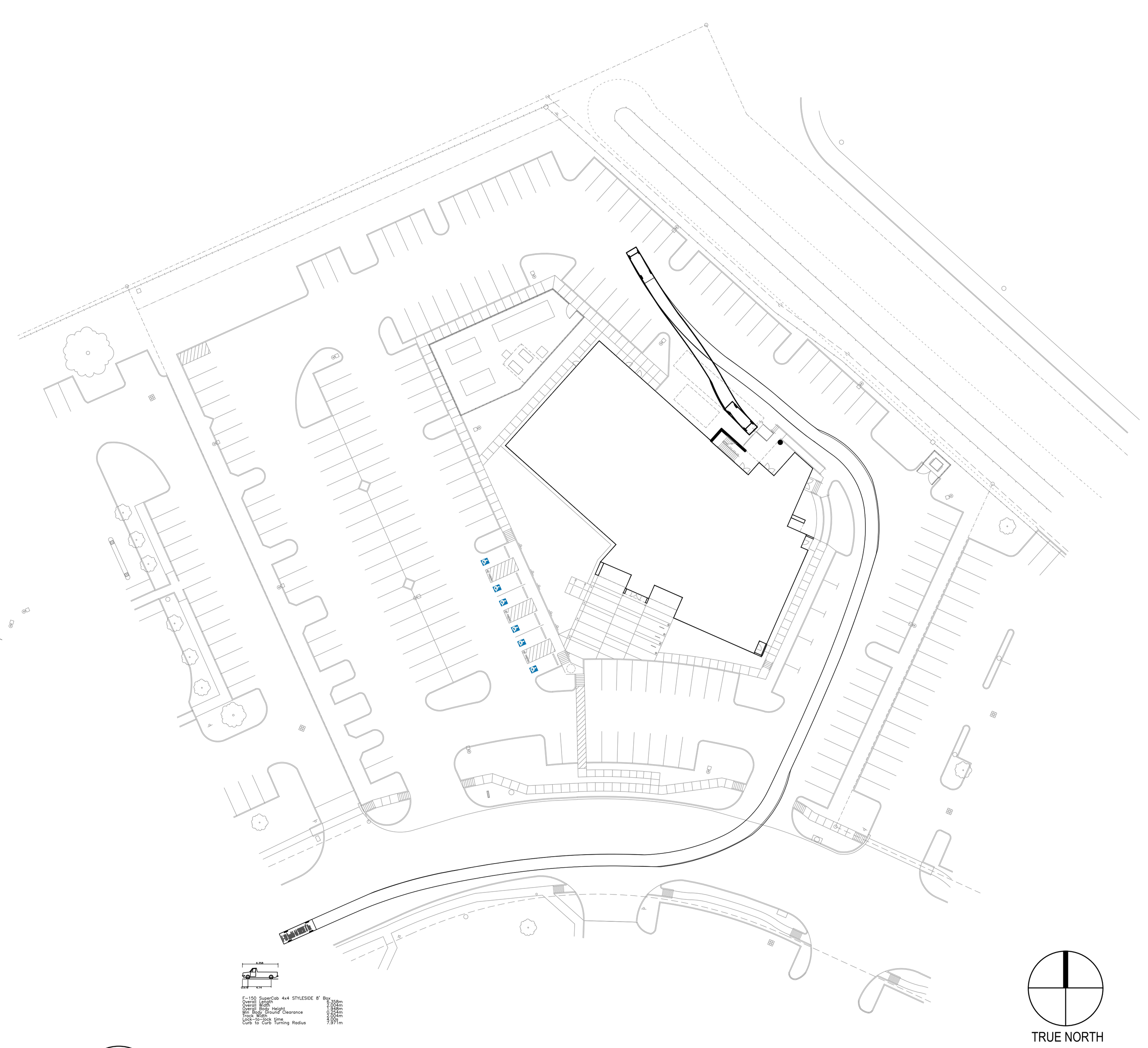

4 A101 TRUCK PATH - CITY DELIVERY TRUCK - LOADING DOCK ENTRY
SCALE : 1" = 60'-0"

2 A101 TRUCK PATH - CITY DELIVERY TRUCK - CIRCULATION AROUND SITE
SCALE : 1" = 60'-0"

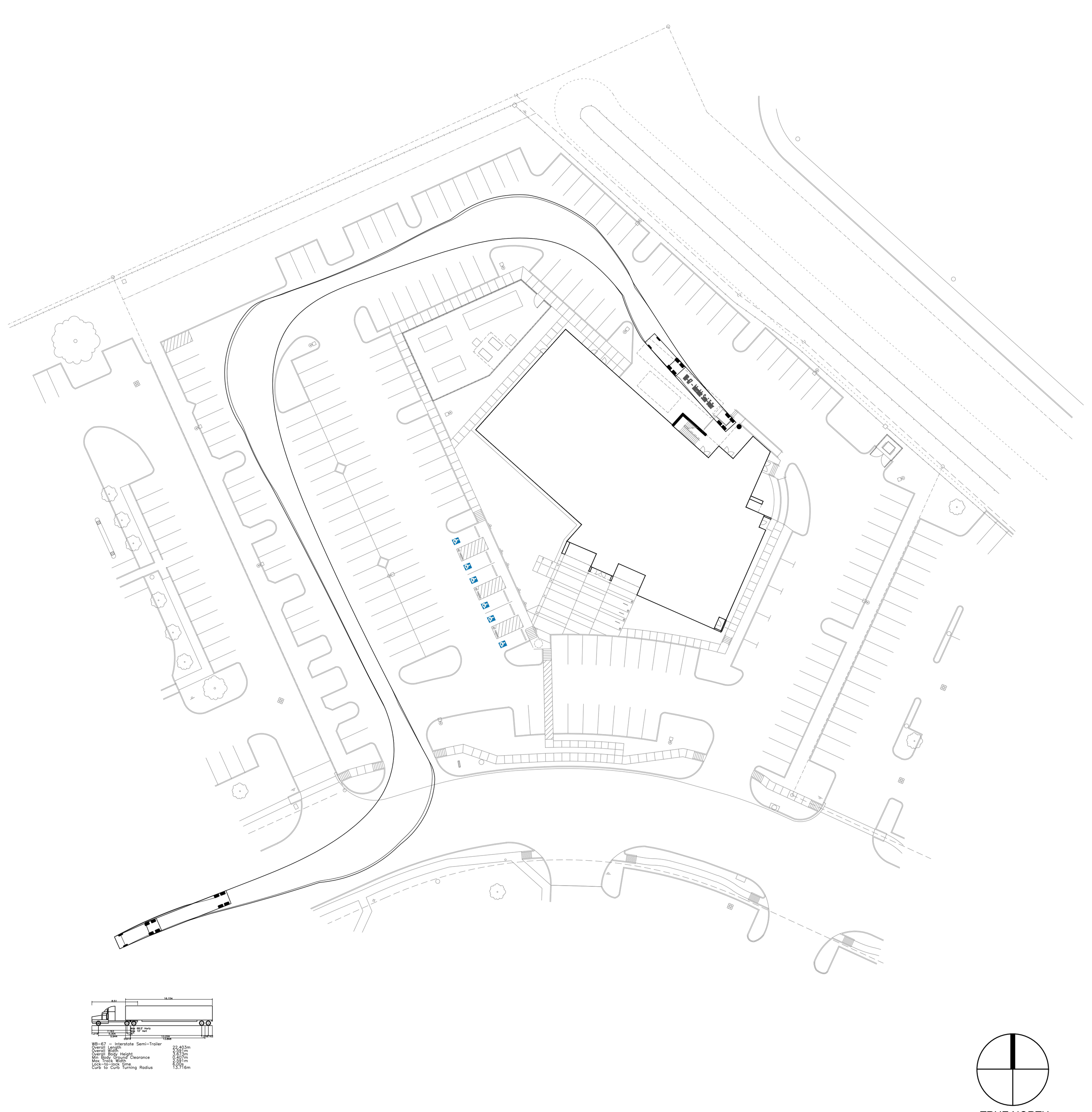

5 A101 TRUCK PATH - SEMI-TRAILER - LOADING DOCK EXIT
SCALE : 1" = 60'-0"

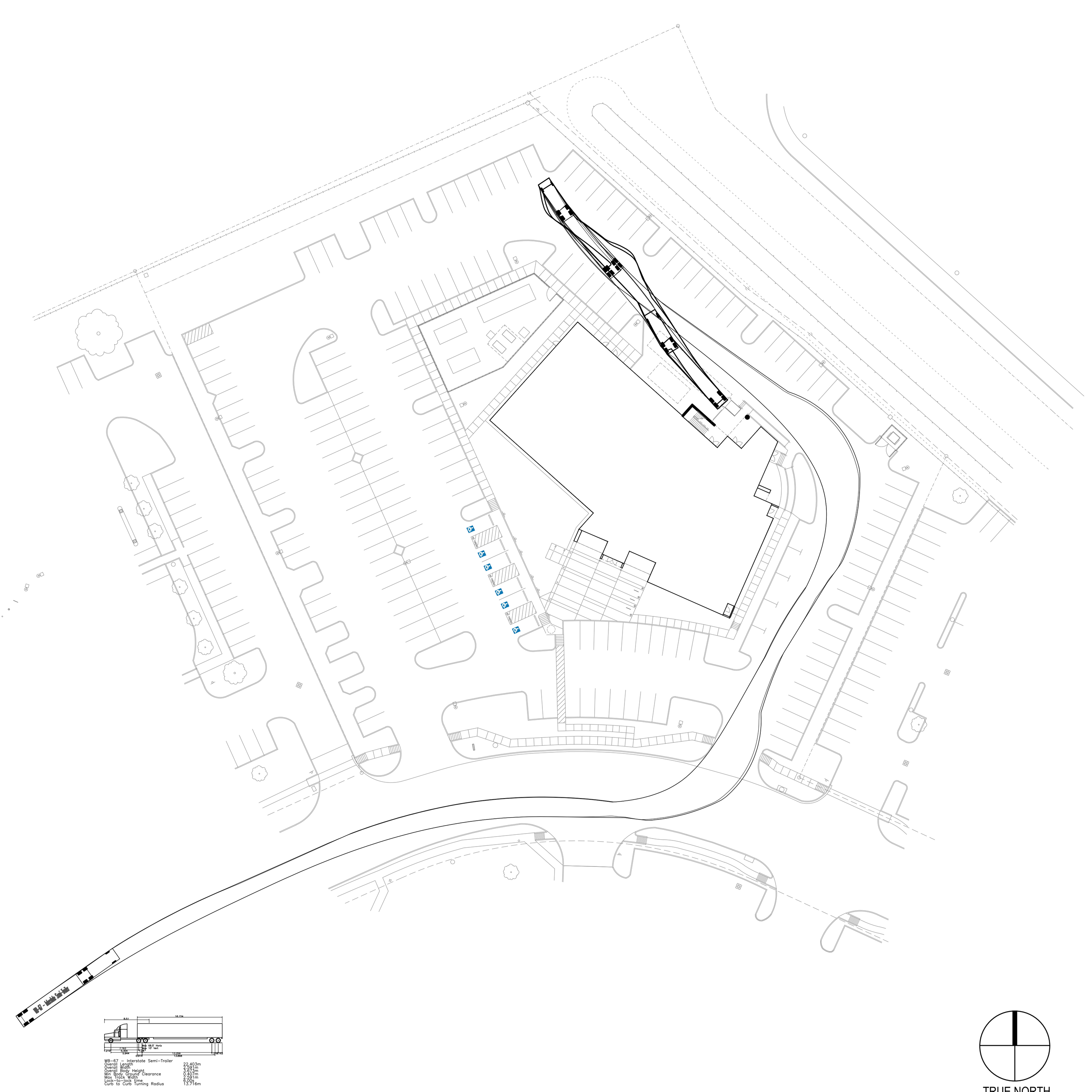

3 A101 TRUCK PATH - SEMI-TRAILER - LOADING DOCK ENTRY
SCALE : 1" = 60'-0"

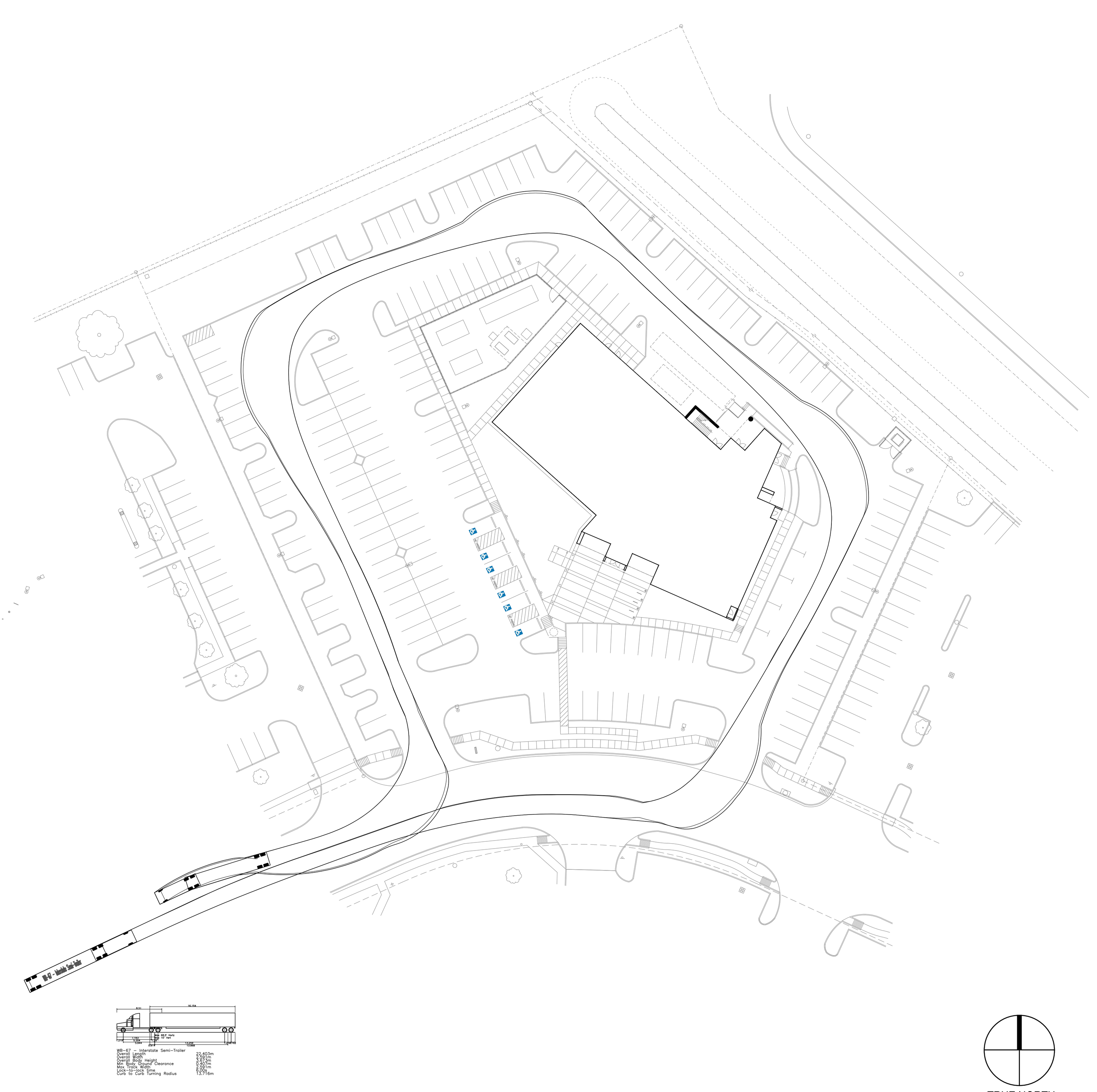

1 A101 TRUCK PATH - SEMI-TRAILER - CIRCULATION AROUND SITE
SCALE : 1" = 60'-0"

FSGROUP
TEAM+BUILD
16575 Village Drive
Jersey Village Texas 77040
713 344 1752 Office
www.fsdesignbuild.com

PROJECT NAME

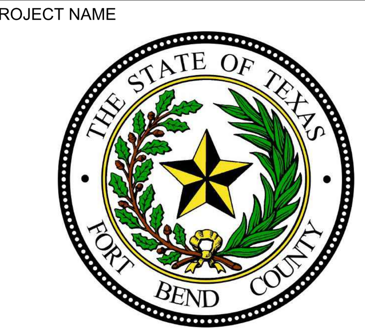

INFORMATION TECHNOLGY BUILDING
EUGENE HEIMANN CIRCLE
FORT BEND COUNTY . TEXAS

CONSULTANTS

PROFESSIONAL SEAL

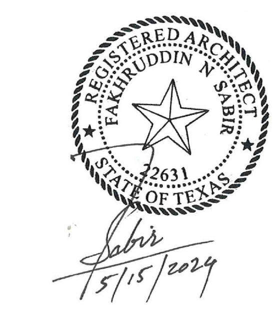

ISSUED FOR
ISSUED FOR PROPOSALS AND PERMIT

REVISIONS

No.	DESCRIPTION	DATE

KEY PLAN

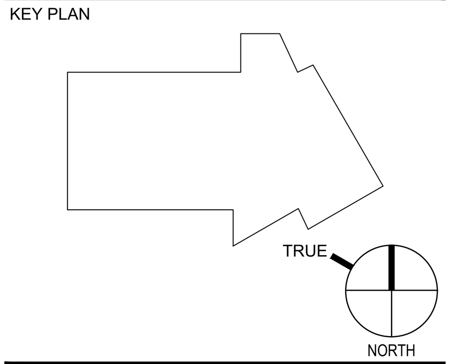

SHEET TITLE
SWEPT PATH ANALYSIS

SCALE: As Indicated
DATE: 05/15/2024
PROJECT NUMBER: 2319
SHEET NUMBER: A101

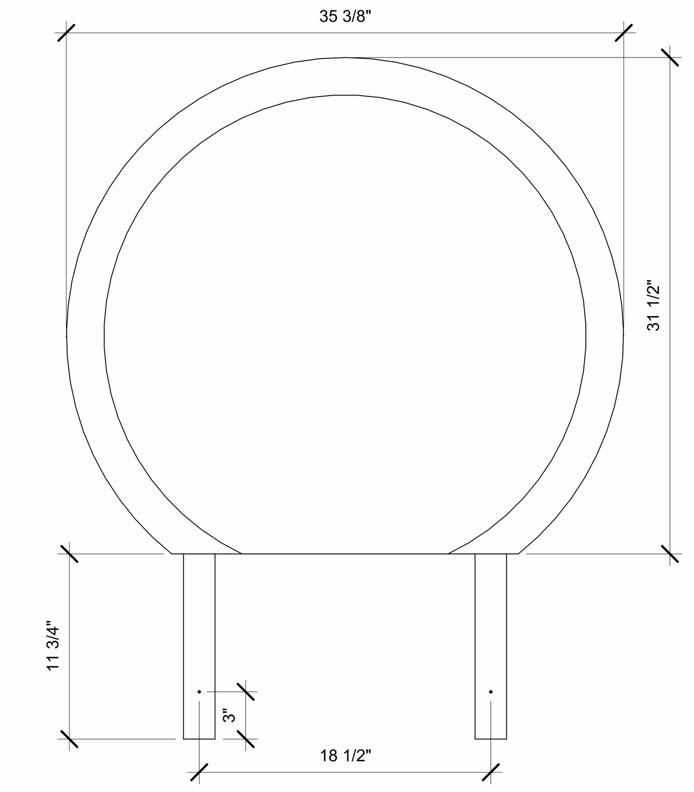

BIKE RACK - ELEVATION

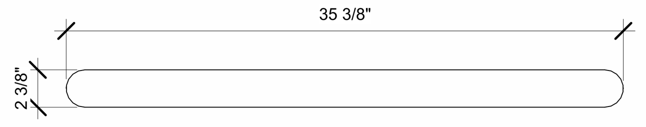

BIKE RACK - PLAN

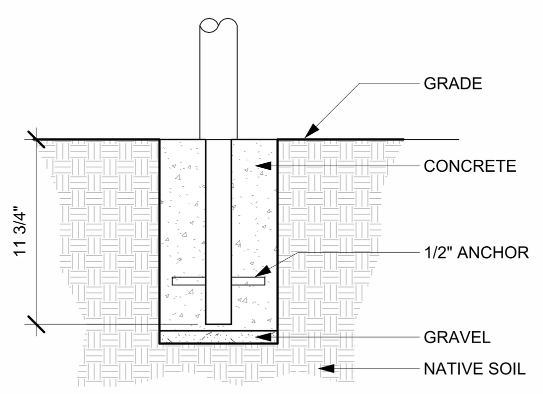

BIKE RACK - MOUNTING DETAIL

CIRCULAR BIKE RACK : 36" DIA STAINLESS STEEL RACK, IN-GROUND MOUNT, #593-3005 FROM THE PARKCATALOG.COM 866-280-9894

18 A102 BIKE RACK - DETAILS
SCALE : 1 1/2" = 1'-0"

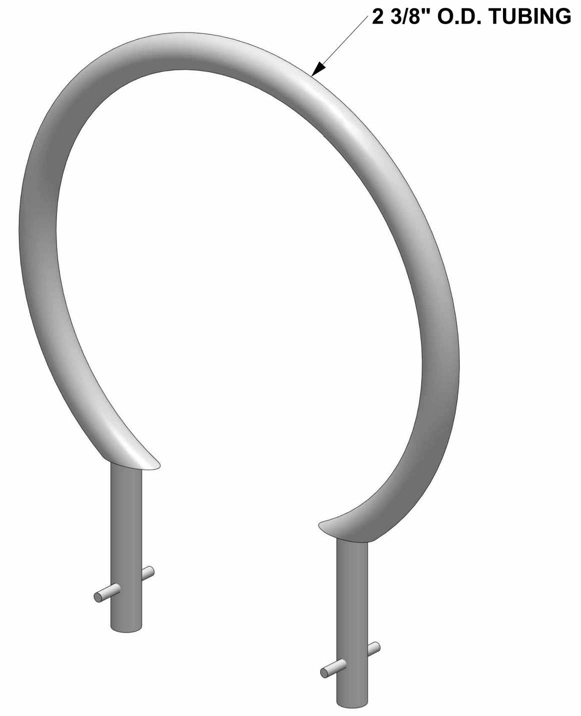

16 A102 BIKE RACK - 3D VIEW
SCALE :

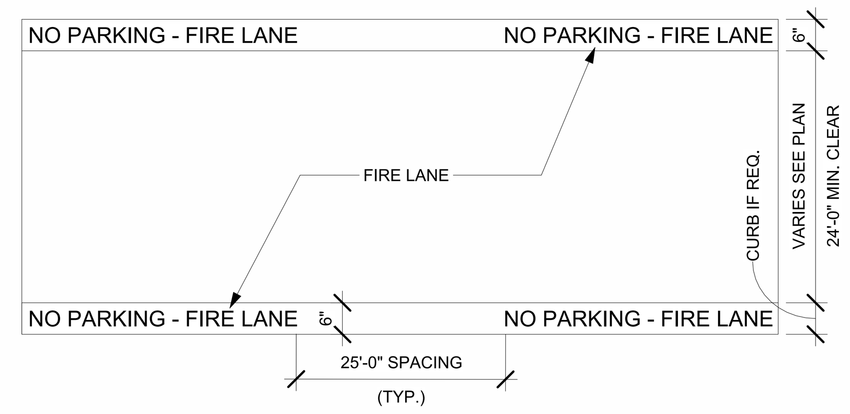

NOTE:

2.8.1.3 FIRE LANE MARKINGS: FIRE LANES SHALL BE MARKED WITH A SIX (6) INCH PAINTED RED STRIPE. THE WORDS "FIRE LANE NO PARKING" SHALL BE STENCILED IN WHITE PAINT, FOUR (4) INCH HIGH LETTERS WITH 3/4"-INCH STROKE. THE INTERVAL BETWEEN STENCILED SIGNS SHALL BE ADEQUATE TO INFORM THE PUBLIC OF THE EXISTENCE OF THE FIRE LANE BUT IN NO EVENT SHALL THE INTERVAL BE GREATER THAN TWENTY (20) FEET. MARKINGS SHALL BE ON EACH SIDE OF THE DESIGNATED FIRE LANE. THE SHADE AND TYPE OF POINT SHALL COMPLY WITH THE STATE OF TEXAS SPECIFICATIONS FOR TRAFFIC PAINT.

12 A102 DETAIL- FIRE LANE DETAIL
SCALE : 1/2" = 1'-0"

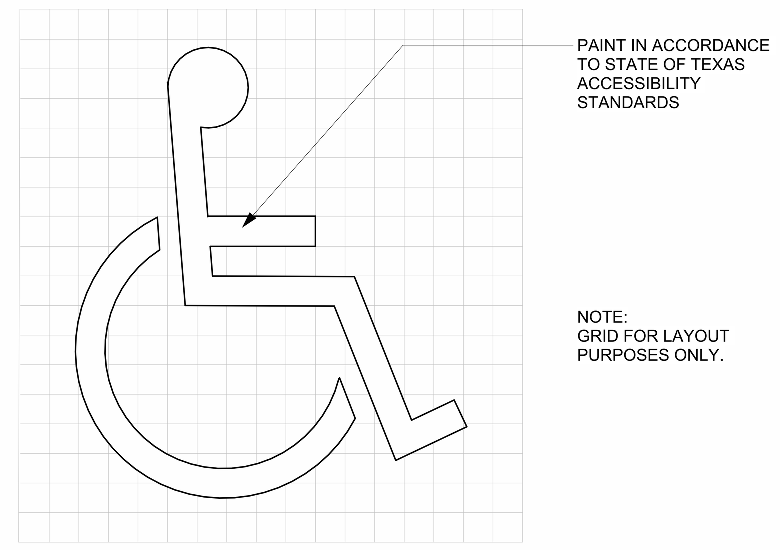

8 A102 DETAIL- ACCESSIBILITY SYMBOL
SCALE : 1" = 1'-0"

GENERAL NOTES: SITE DETAILS

A. REFER TO SITE PLAN FOR LOCATIONS OF SITE ELEMENTS.
B. RE: STRUCTURAL FOR FOUNDATIONS OF PIPE BOLLARDS, FENCE POSTS, LIGHT POLE BASES, FLAG POLE BASES AND STEEL BOLLARDS.
C. RE: FOR CIVIL FOR WHEELSTOP DETAIL.

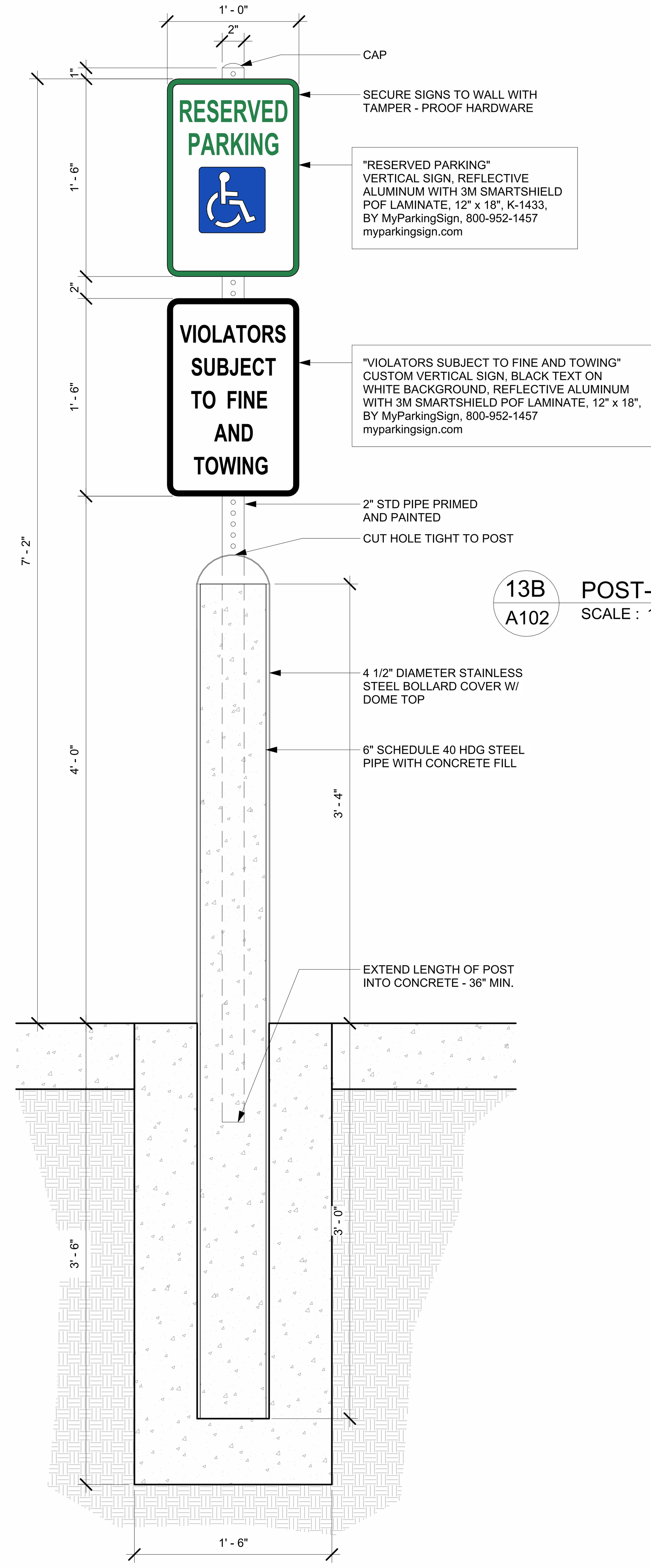

13A

13A A102 POST-MOUNTED ACCESSIBLE PARKING SIGNANGE
SCALE : 1 1/2" = 1'-0"

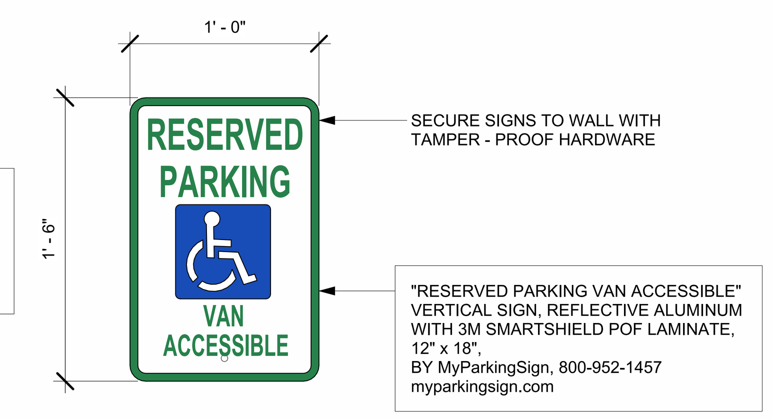

13B

13B A102 POST-MOUNTED ACCESSIBLE VAN PARKING SIGNANGE
SCALE : 1 1/2" = 1'-0"

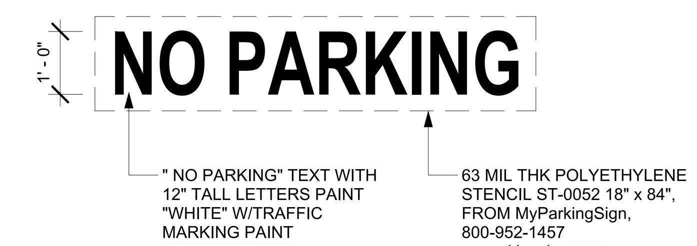

7 A102 NO PARKING TEXT
SCALE : 1/2" = 1'-0"
PER TDLR ARCHITECTURAL BARRIERS ADMINISTRATIVE RULE 68.104(a)(2)

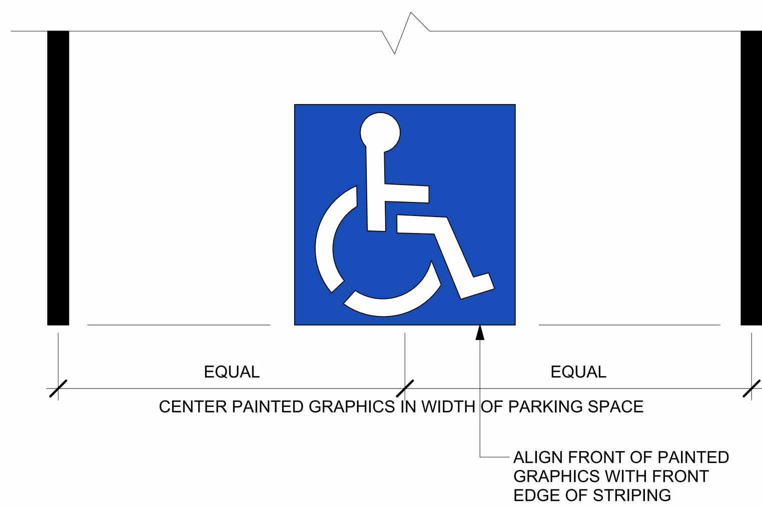

6 A102 PAINTED GRAPHICS ALIGNMENT
SCALE : 1/2" = 1'-0"

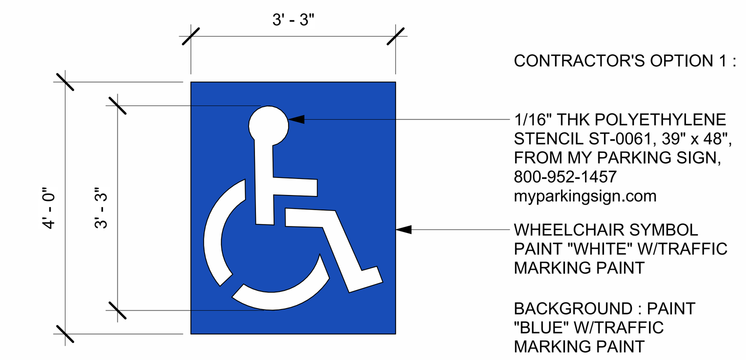

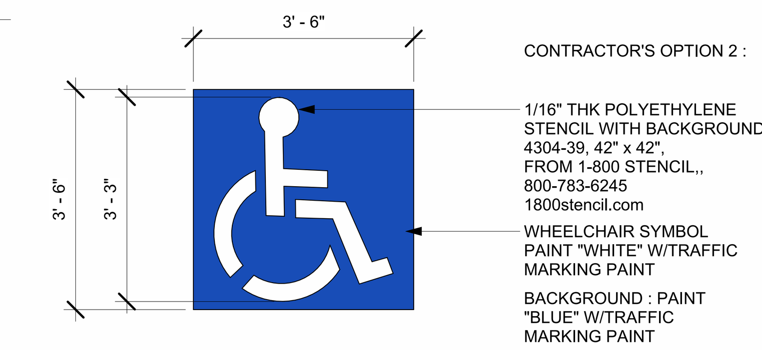

2 A102 PAINTED WHEELCHAIR GRAPHIC AT ACCESSIBLE PARKING
SCALE : 1/2" = 1'-0"
PER TDLR ARCHITECTURAL BARRIERS ADMINISTRATIVE RULE 68.104(a)(1)

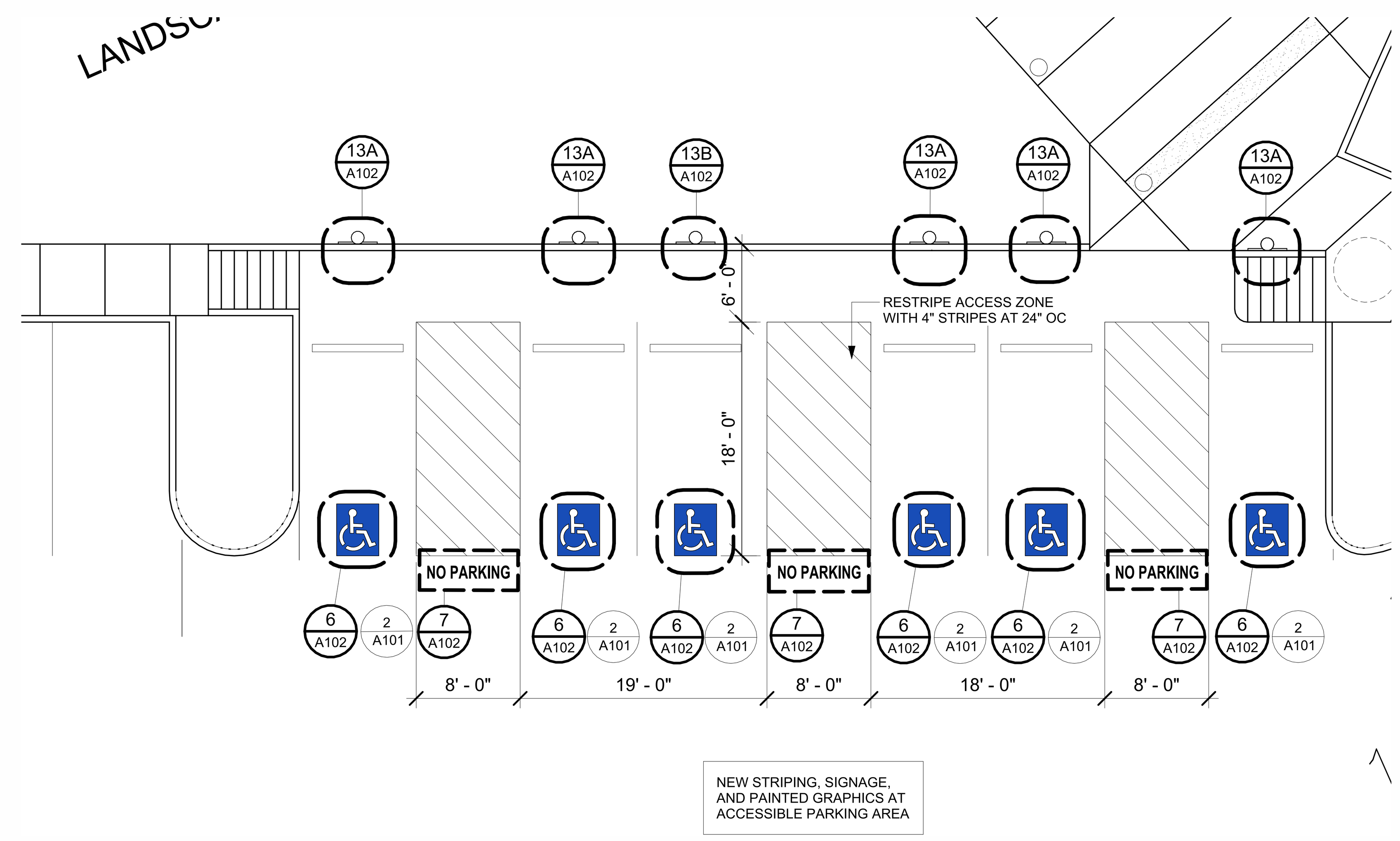

1 A102 ENLG PLAN: ACCESSIBLE PARKING
SCALE : 1/8" = 1'-0"

FSGROUP ARCHITECTS
16575 Village Drive
Houston Texas 77040
713 344 1752 PH
fsdesignbuild.com

PROJECT NAME

THE STATE OF TEXAS FORT BEND COUNTY

INFORMATION TECHNOLOGY BUILDING
1419 EUGENE HEIMANN CIRCLE
FORT BEND COUNTY , RICHMOND , TEXAS 77469

CONSULTANTS

PROFESSIONAL SEAL

REGISTERED ARCHITECT FAKHRUDDIN N SABIR 22631 STATE OF TEXAS
5/15/2024

ISSUED FOR
ISSUED FOR PROPOSALS AND PERMIT

REVISIONS

No.	DESCRIPTION	DATE

KEY PLAN

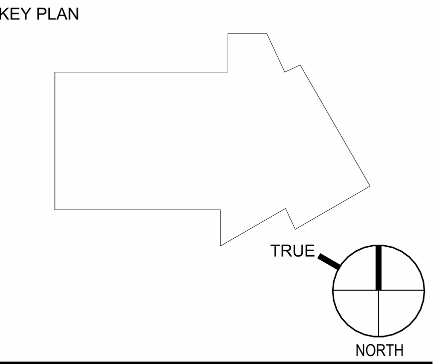

SHEET TITLE
SITE DETAILS

SCALE: As indicated
DATE: 05/15/2024
PROJECT NUMBER: 2319
SHEET NUMBER: A102

FILE PATH: Autodesk Docs://FBC IT Building/FBIT_A23.rvt
PLOT DATE: 5/21/2024 4:41:23 PM

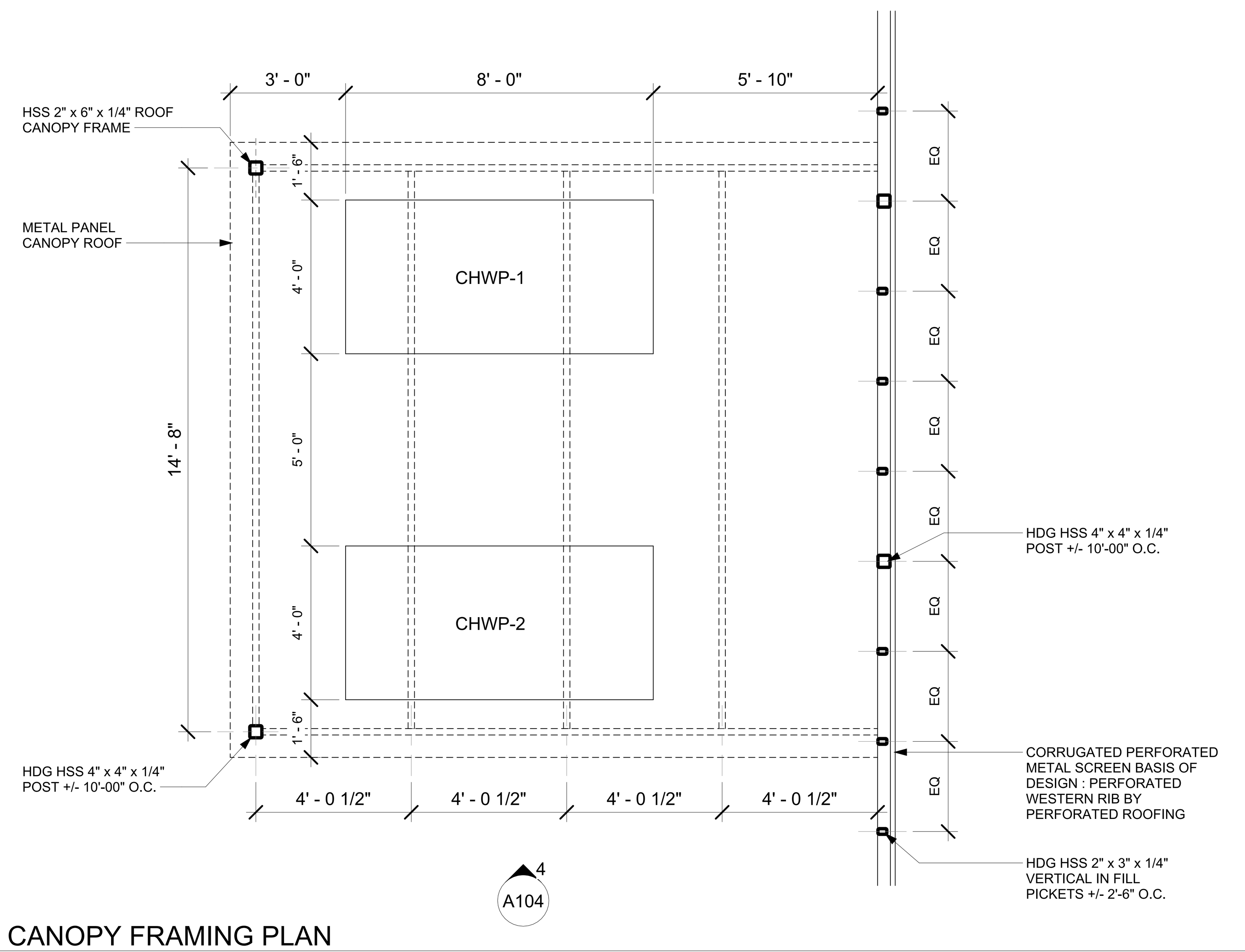

5 A103 CANOPY FRAMING PLAN
SCALE : 3/8" = 1'-0"

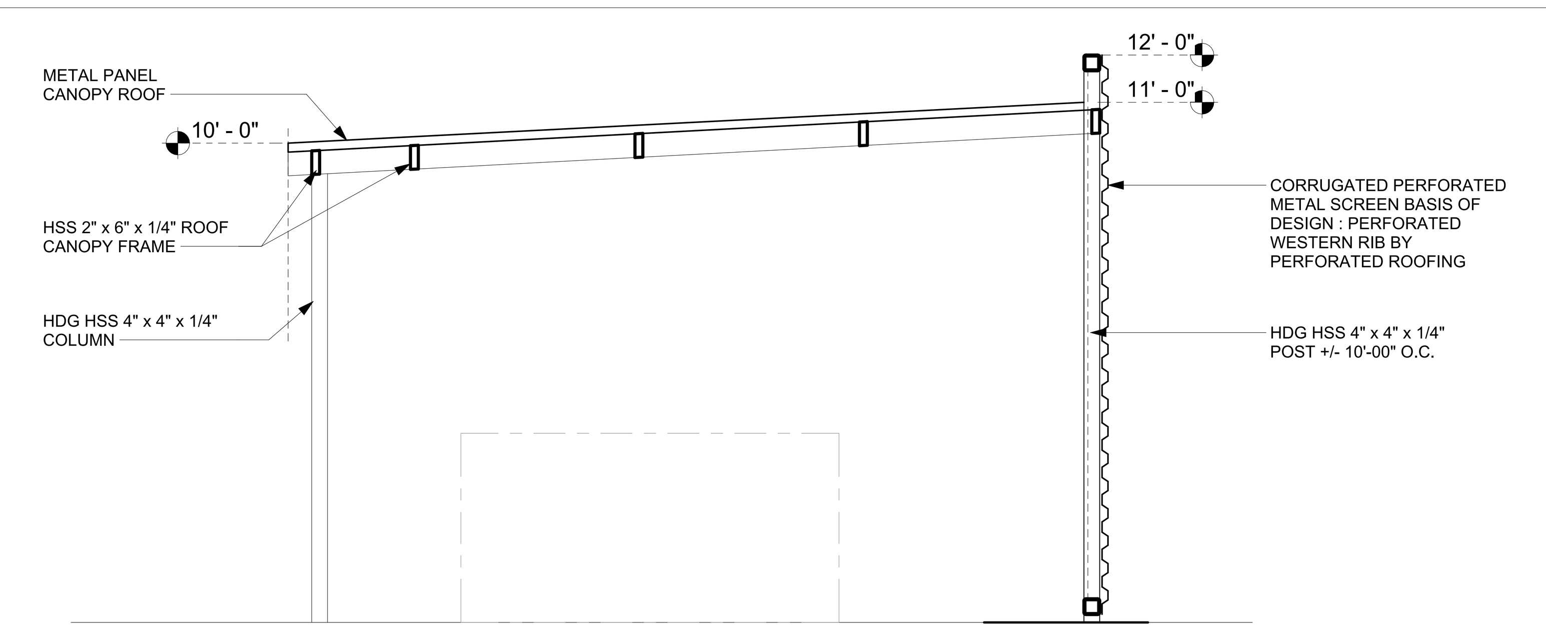

4 A103 CANOPY ELEVATION
SCALE : 3/8" = 1'-0"

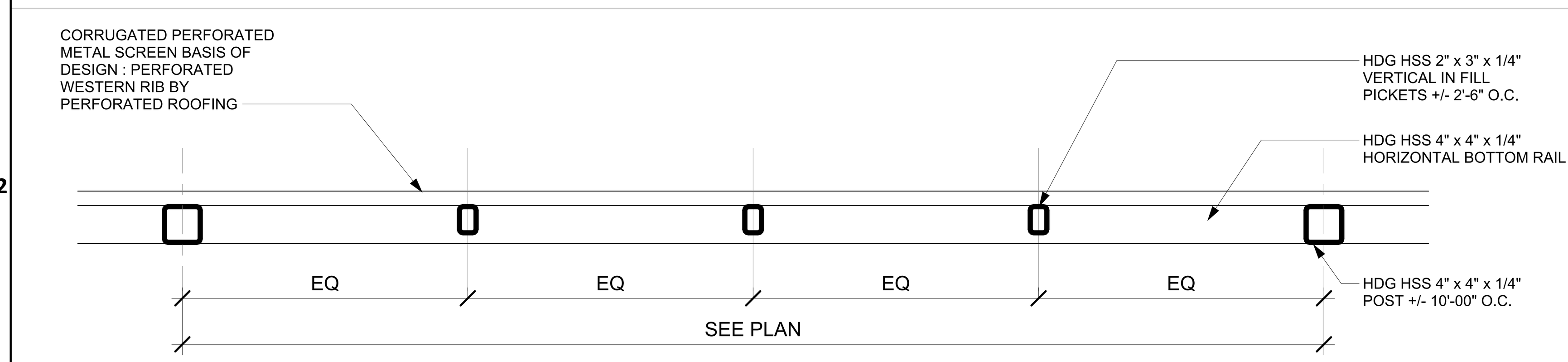

3 A103 ENLARGED PLAN OF EQUIPMENT YARD FENCE
SCALE : 1" = 1'-0"

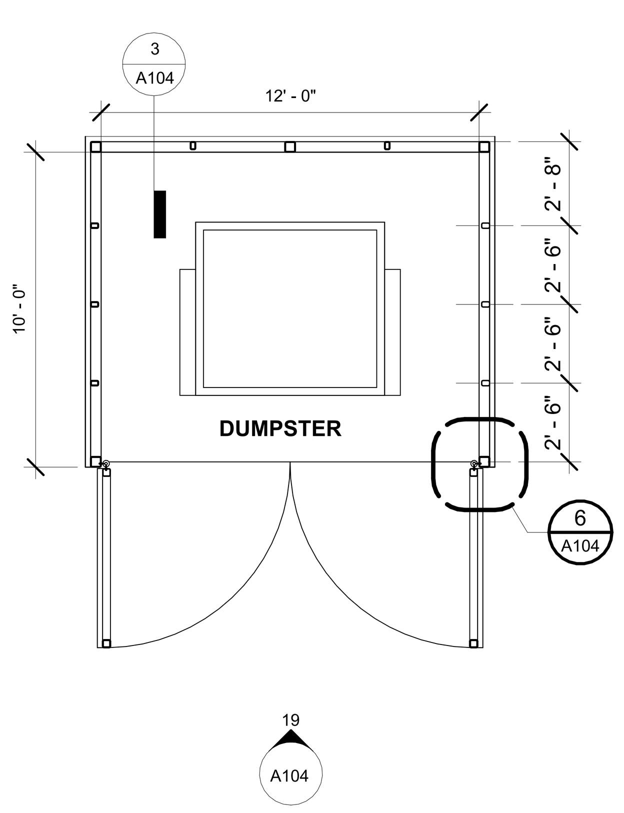

2 A103 ENLG PLAN: DUMPSTER ENCLOSURE
SCALE : 1/4" = 1'-0"

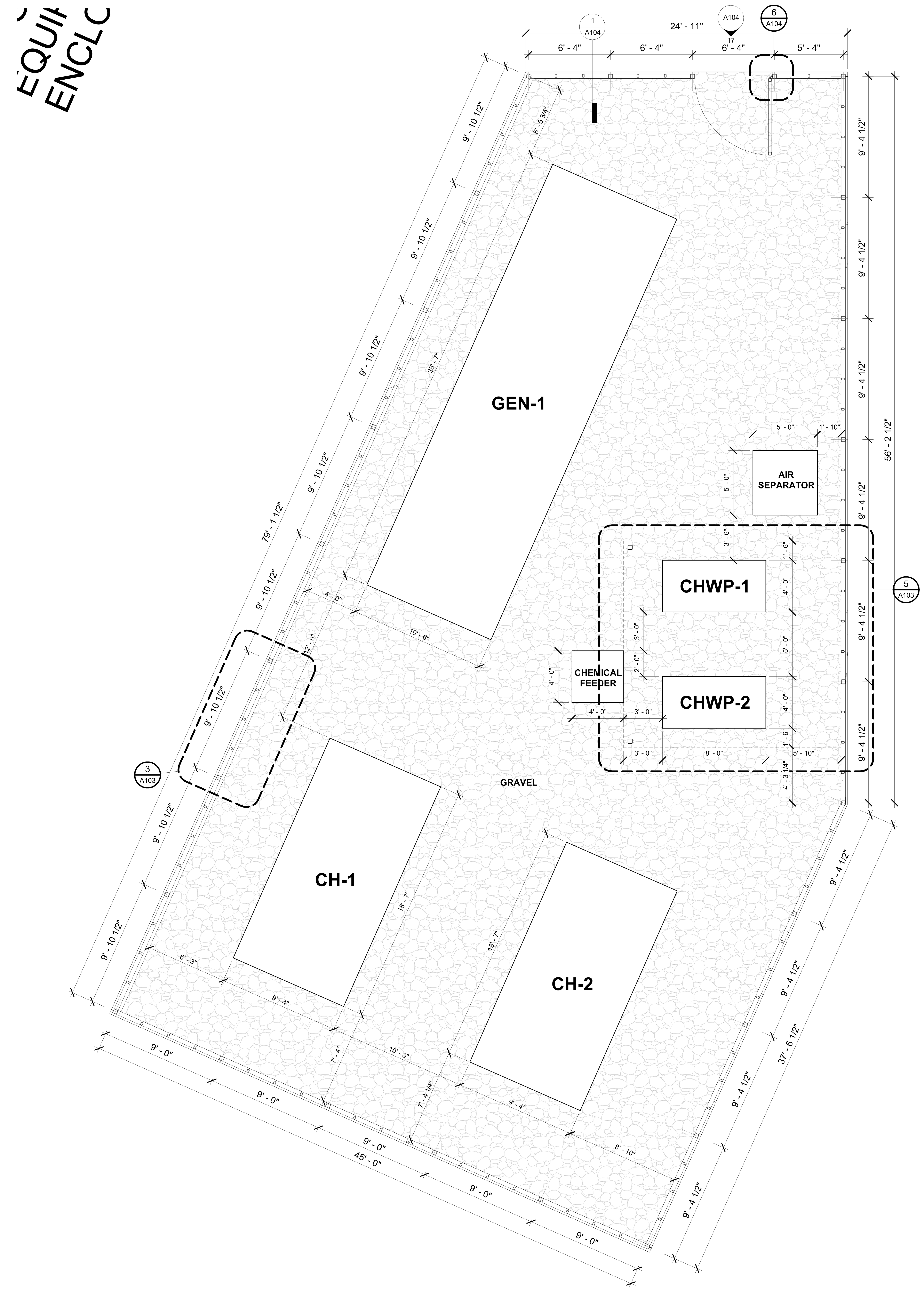

1 A103 ENLG PLAN: EQUIPMENT YARD
SCALE : 1/4" = 1'-0"

FSGROUP ARCHITECTS
16575 Village Drive
Houston Texas 77040
713 344 1752 PH
fsdesignbuild.com

PROJECT NAME

INFORMATION TECHNOLGY BUILDING
1419 EUGENE HEIMANN CIRCLE
FORT BEND COUNTY . RICHMOND . TEXAS 77469

CONSULTANTS

PROFESSIONAL SEAL

ISSUED FOR
ISSUED FOR PROPOSALS AND PERMIT

REVISIONS

No.	DESCRIPTION	DATE

KEY PLAN

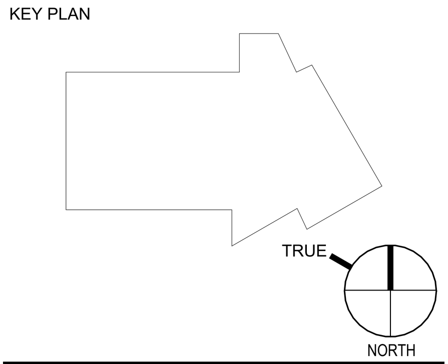

SHEET TITLE
FENCE AND GATE DETAILS

SCALE
As indicated

DATE
05/15/2024

PROJECT NUMBER
2319

SHEET NUMBER
A103

FILE PATH: Autodesk Docs://FBC IT Building/FBIT_A23.rvt
PLOT DATE: 5/21/2024 4:41:46 PM

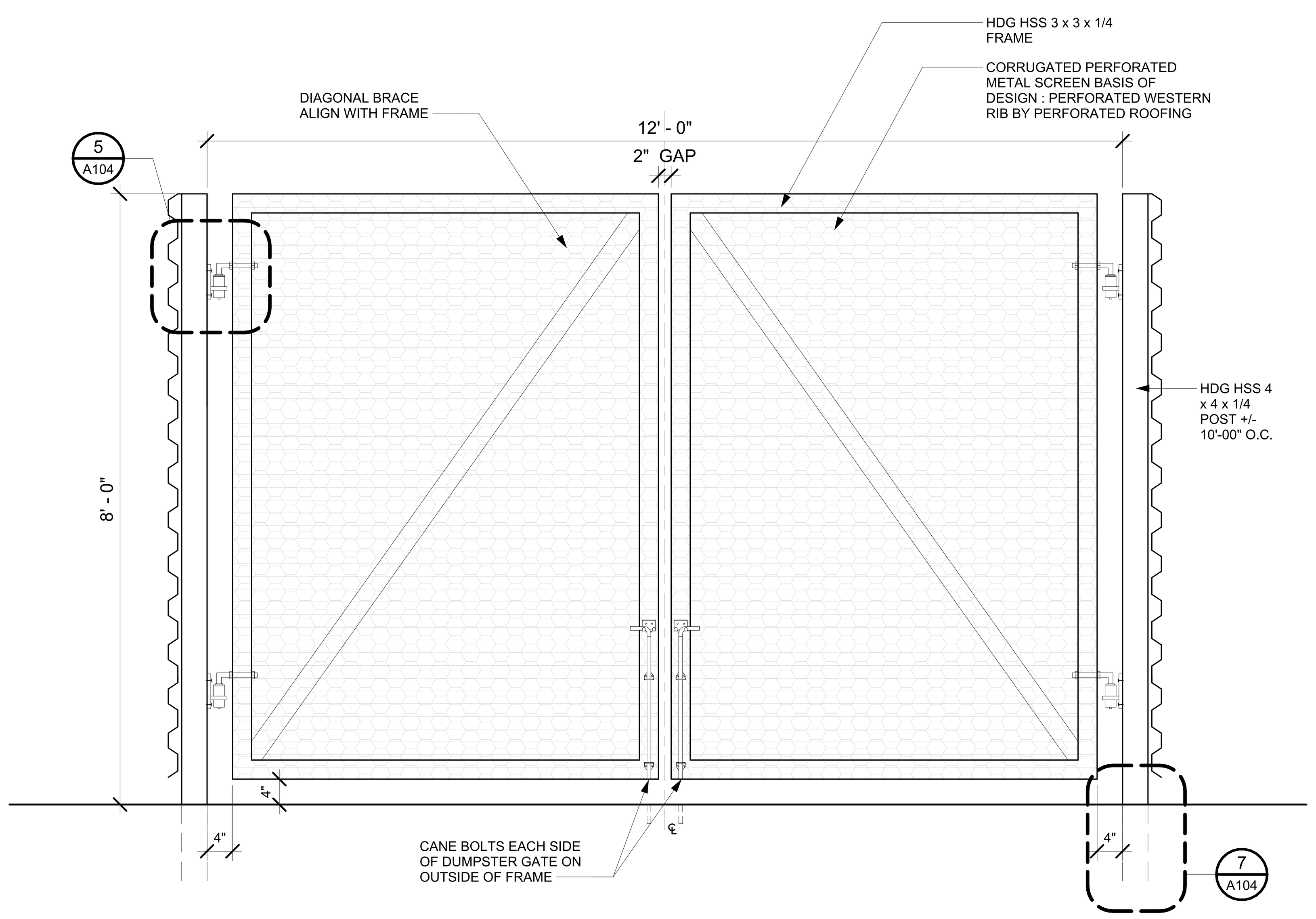

19 A104 DUMPSTER GATE
SCALE : 3/4" = 1'-0"

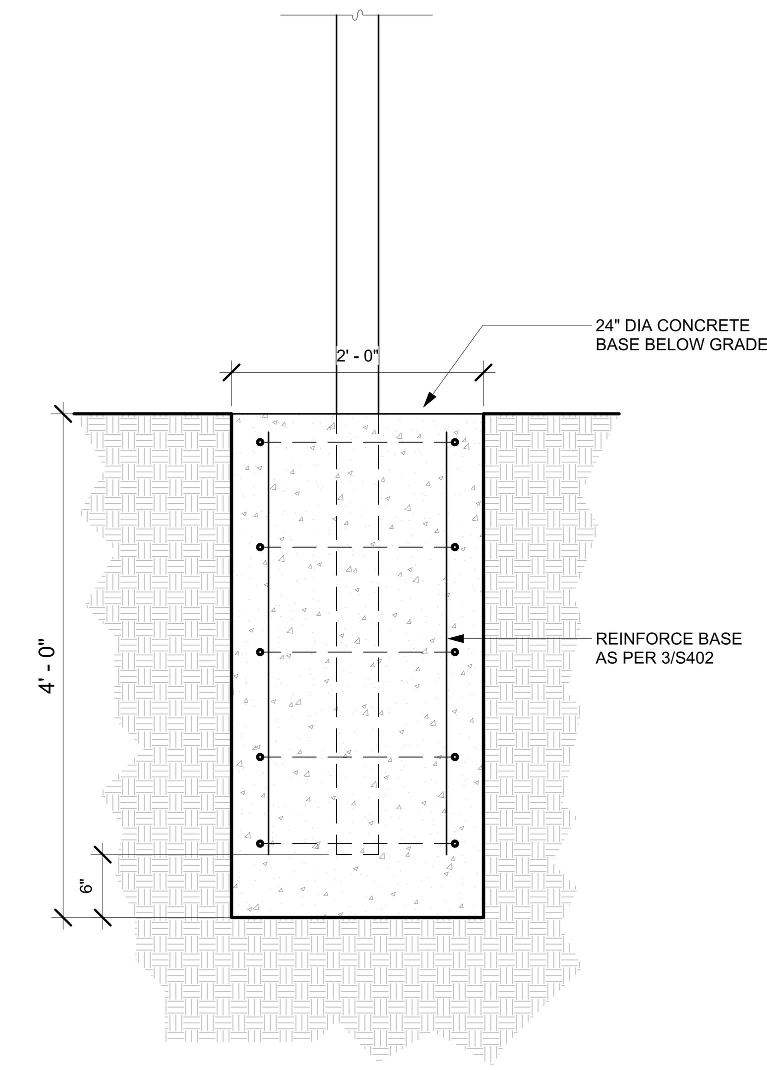

7 A104 STEEL POST FOUNDATION DETAIL
SCALE : 1" = 1'-0"

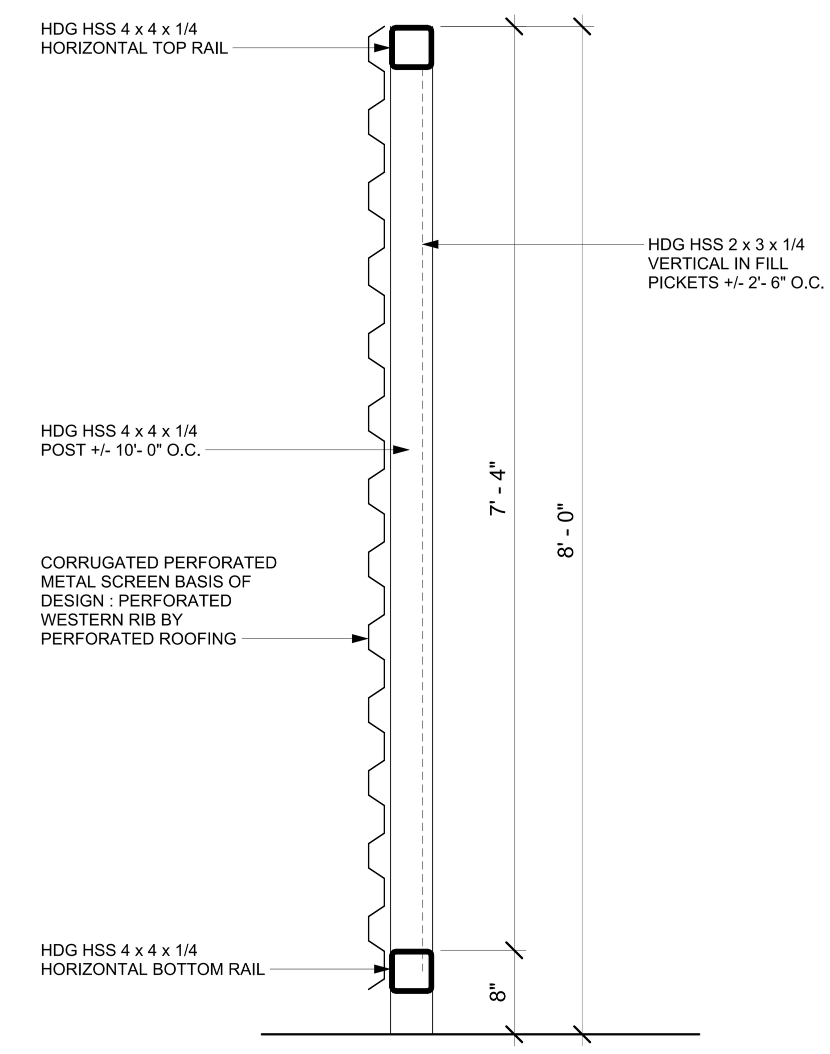

3 A104 METAL FENCE AT DUMPSTER
SCALE : 1" = 1'-0"

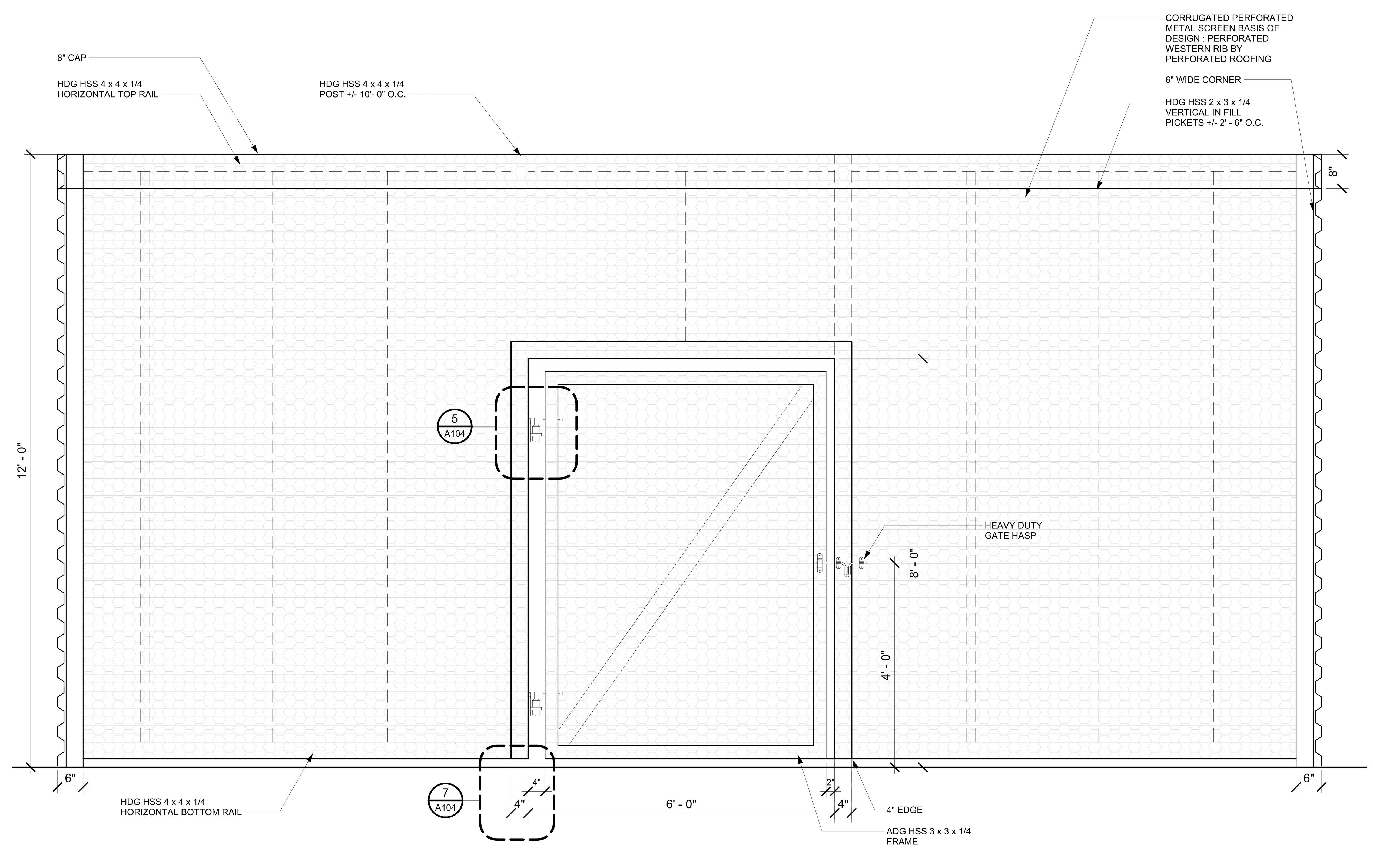

17 A104 EQUIPMENT YARD GATE
SCALE : 3/4" = 1'-0"

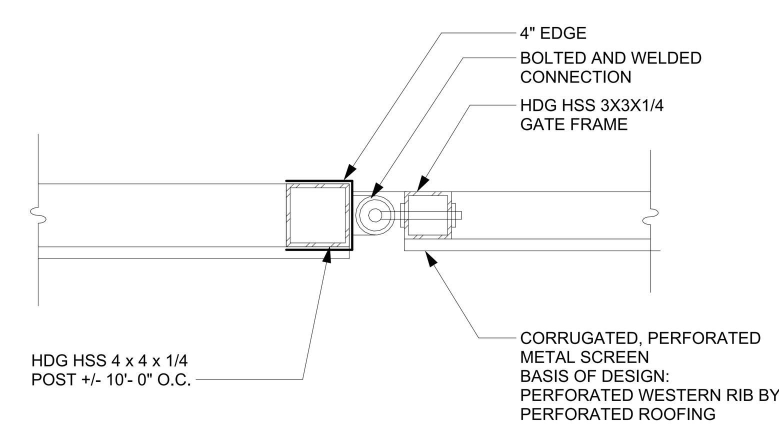

6 A104 DETAIL@ GATE
SCALE : 1 1/2" = 1'-0"

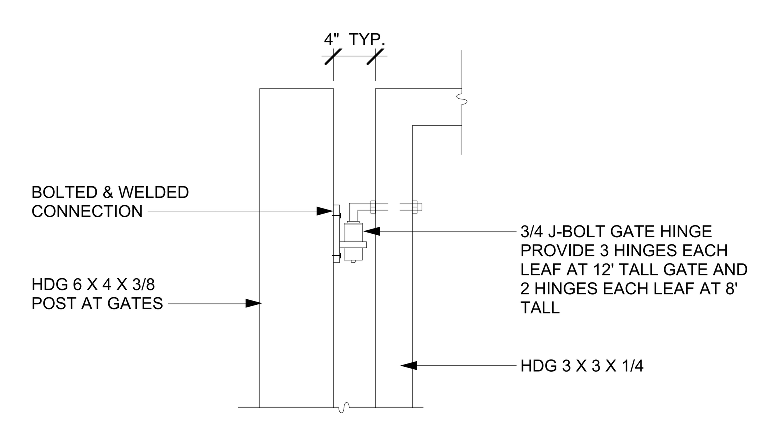

5 A104 GATE HINGE DETAIL
SCALE : 1" = 1'-0"

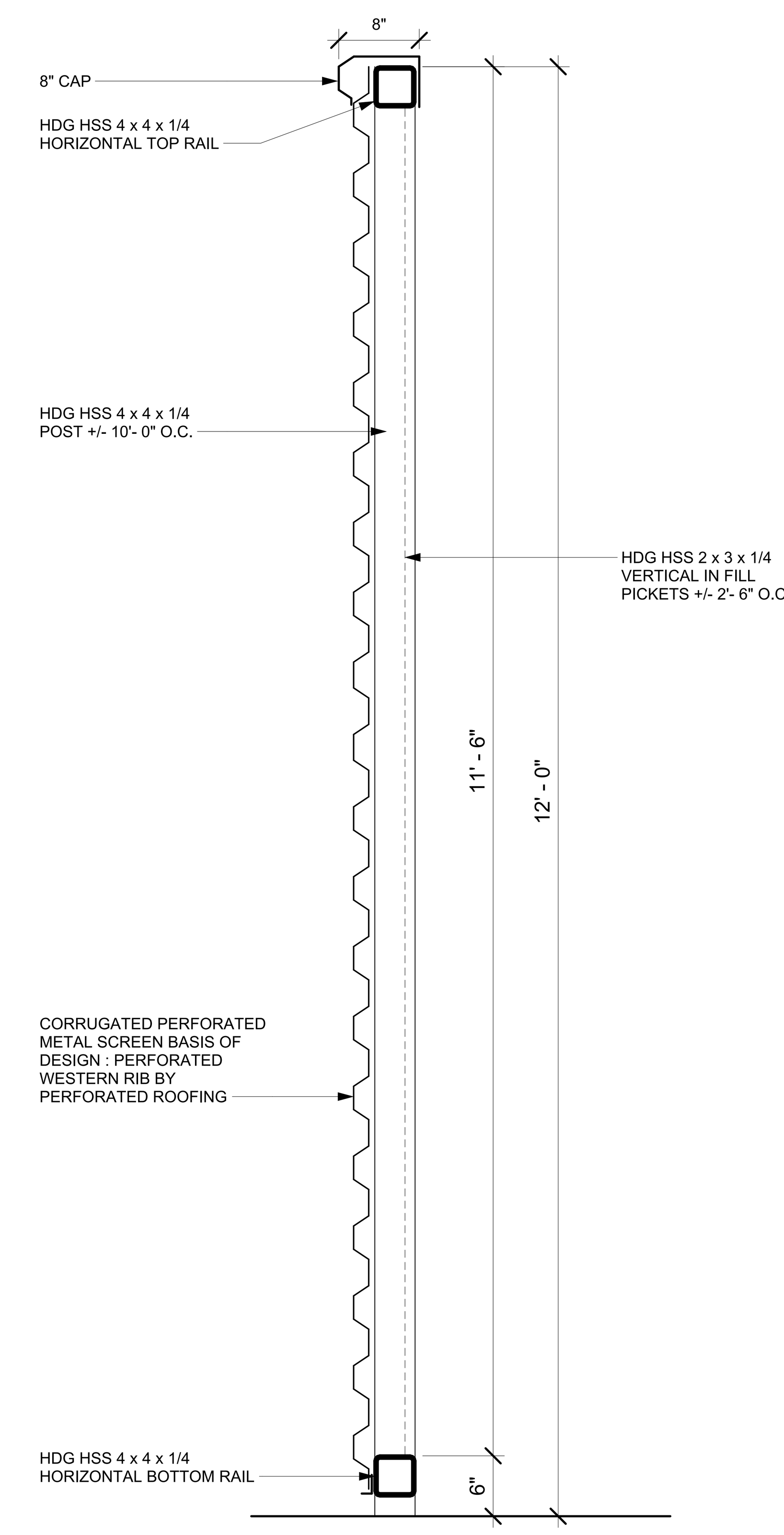

1 A104 METAL FENCE AT EQUIPMENT YARD
SCALE : 1" = 1'-0"

FILE PATH: Autodesk Docs://FBC IT Building/FBIT_A23.rvt
PLOT DATE: 5/21/2024 4:42:00 PM

FSGROUP® ARCHITECTS
16575 Village Drive
Houston Texas 77040
713 344 1752 PH
fsdesignbuild.com

PROJECT NAME
INFORMATION TECHNOLGY BUILDING
1419 EUGENE HEIMANN CIRCLE
FORT BEND COUNTY . RICHMOND . TEXAS 77469

CONSULTANTS

PROFESSIONAL SEAL
REGISTERED ARCHITECT FAKHRUDDIN 'N' SABIR 22631 STATE OF TEXAS
5/15/2024

ISSUED FOR
ISSUED FOR PROPOSALS AND PERMIT

REVISIONS

No.	DESCRIPTION	DATE

KEY PLAN

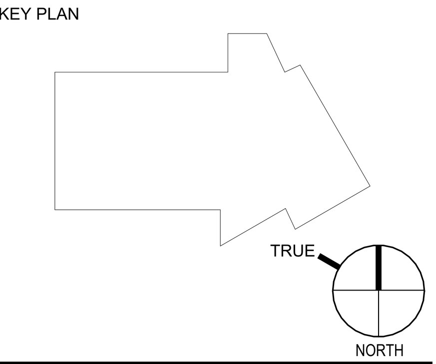

SHEET TITLE
FENCE AND GATE DETAILS

SCALE: As indicated
DATE: 05/15/2024
PROJECT NUMBER: 2319
SHEET NUMBER
A104

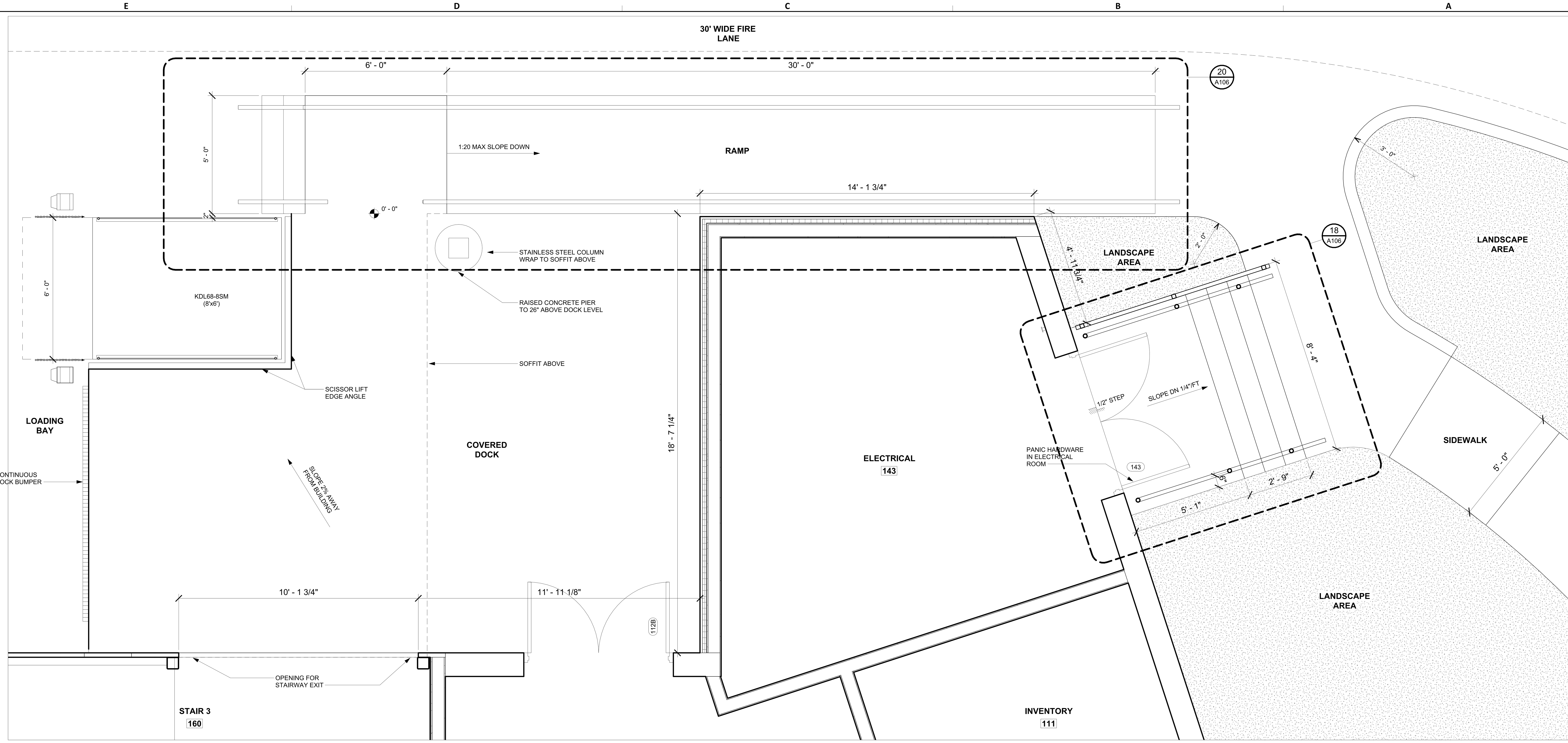

2 A105 DOCK AREA AND ELECTRICAL ROOM - ENLARGED PLAN
SCALE : 1/2" = 1'-0"

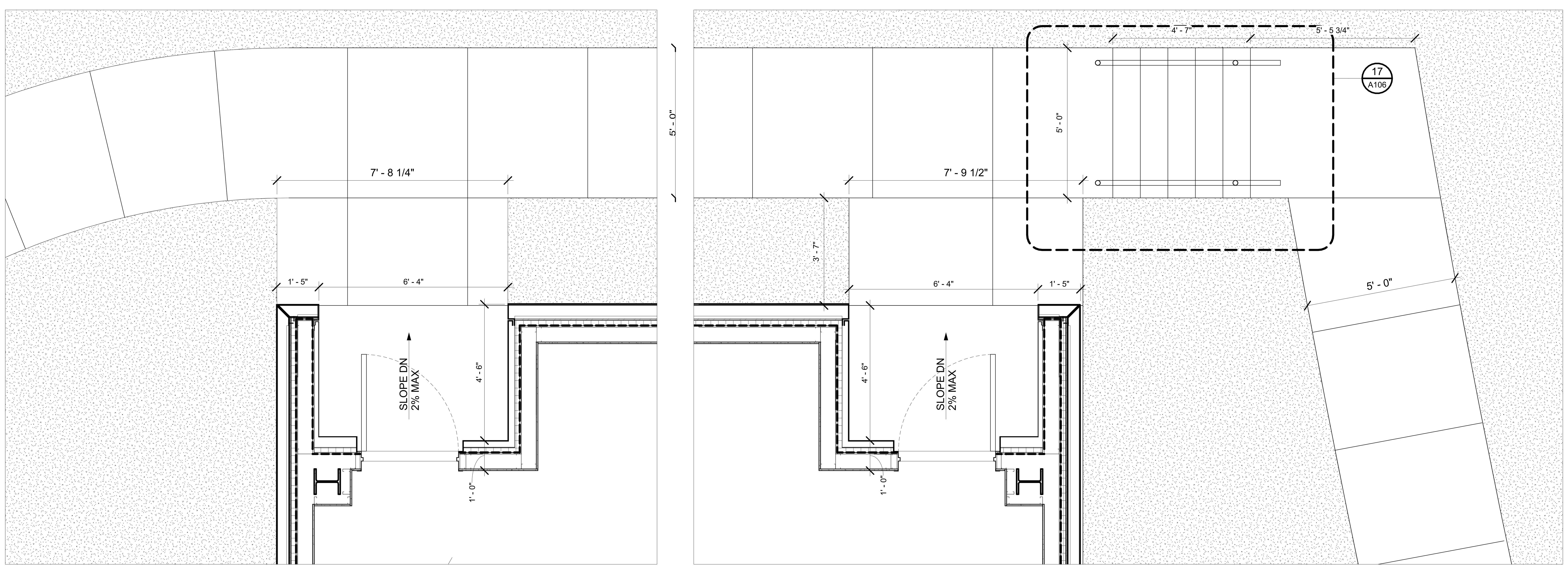

1 A105 TRAINING ROOM EXIT - ENLARGED PLAN
SCALE : 1/2" = 1'-0"

FILE PATH: Autodesk Docs://FBC IT Building/FBIT_A23.rvt
PLOT DATE: 5/21/2024 4:42:22 PM

FSGROUP ARCHITECTS
16575 Village Drive
Houston Texas 77040
713 344 1752 PH
fsdesignbuild.com

PROJECT NAME

THE STATE OF TEXAS FORT BEND COUNTY

INFORMATION TECHNOLGY BUILDING
1419 EUGENE HEIMANN CIRCLE
FORT BEND COUNTY , RICHMOND , TEXAS 77469

CONSULTANTS

PROFESSIONAL SEAL

REGISTERED ARCHITECT FAKHRUDDIN N. SABIR 22631 STATE OF TEXAS
5/15/2024

ISSUED FOR
ISSUED FOR PROPOSALS AND PERMIT

REVISIONS

No.	DESCRIPTION	DATE

KEY PLAN
TRUE NORTH

SHEET TITLE
SITE DETAILS

SCALE 1/2" = 1'-0"
DATE 05/15/2024
PROJECT NUMBER 2319
SHEET NUMBER
A105

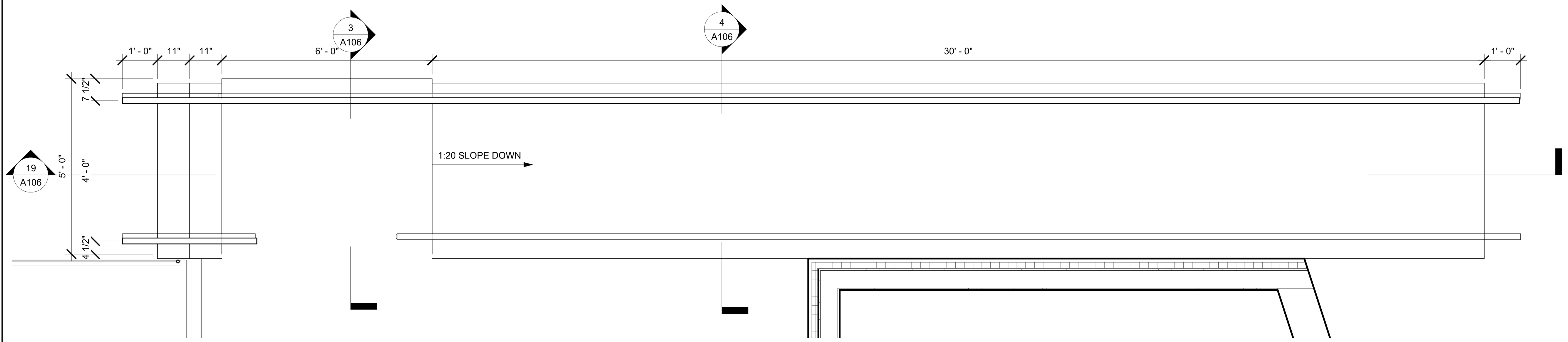

20 A106 ENLARGED PLAN - SLOPED WALKWAY & STEPS
SCALE : 1/2" = 1'-0"

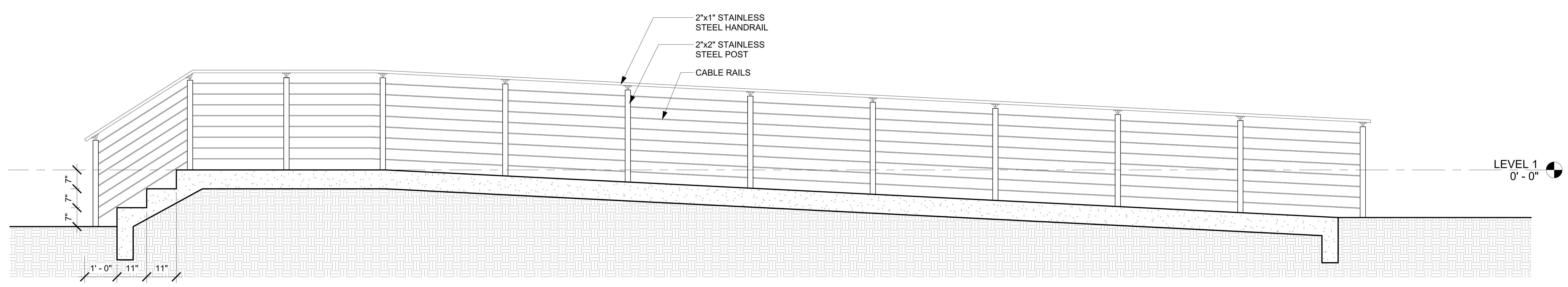

19 A106 SECTION - SLOPED WALKWAY & STEPS
SCALE : 1/2" = 1'-0"

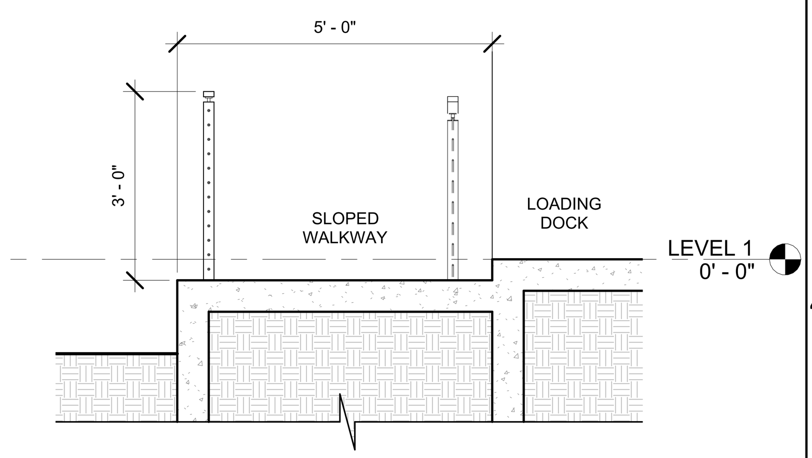

4 A106 SECTION THROUGH SLOPED WALKWAY
SCALE : 1/2" = 1'-0"

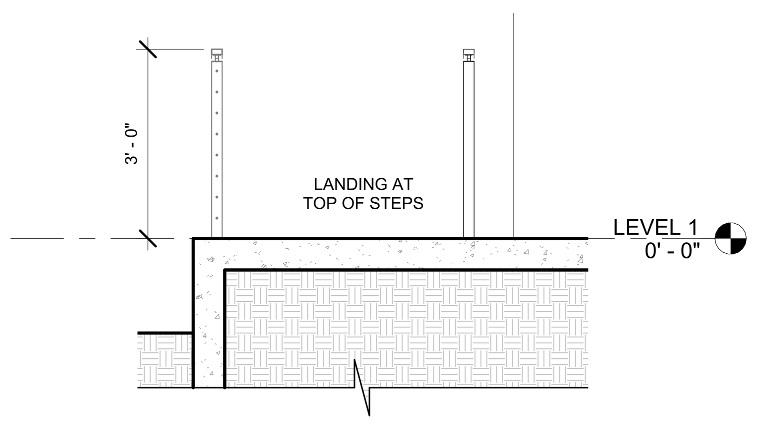

3 A106 SECTION THROUGH LANDING
SCALE : 1/2" = 1'-0"

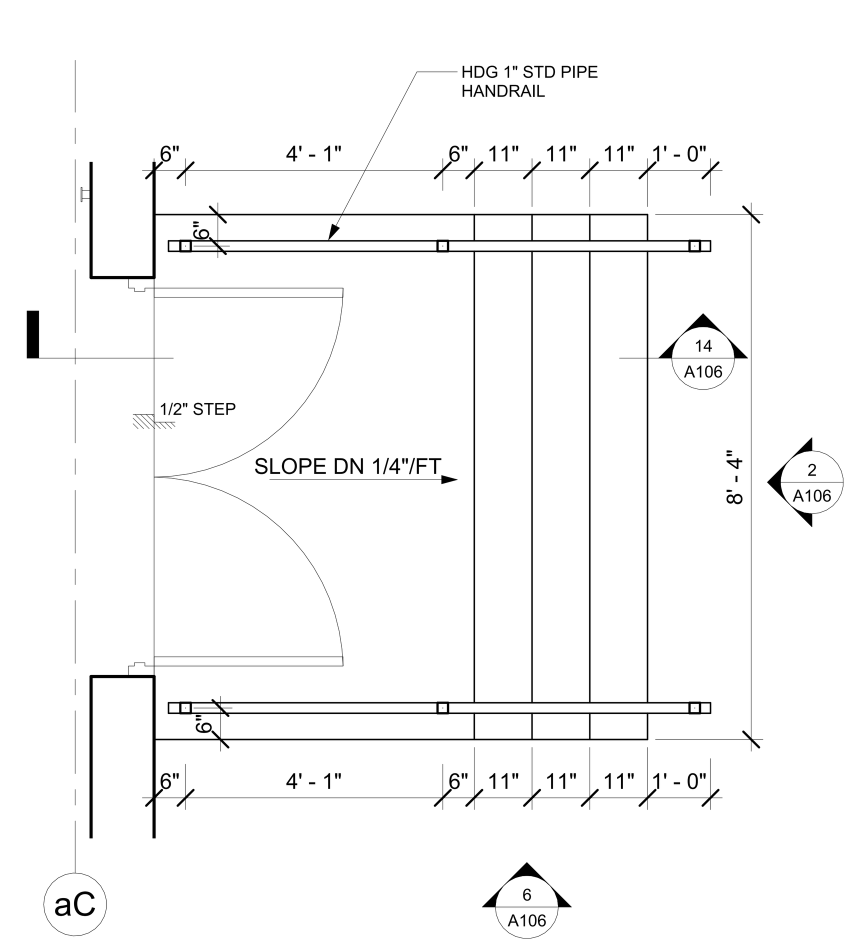

18 A106 ENLARGED PLAN - STAIR 4
SCALE : 1/2" = 1'-0"

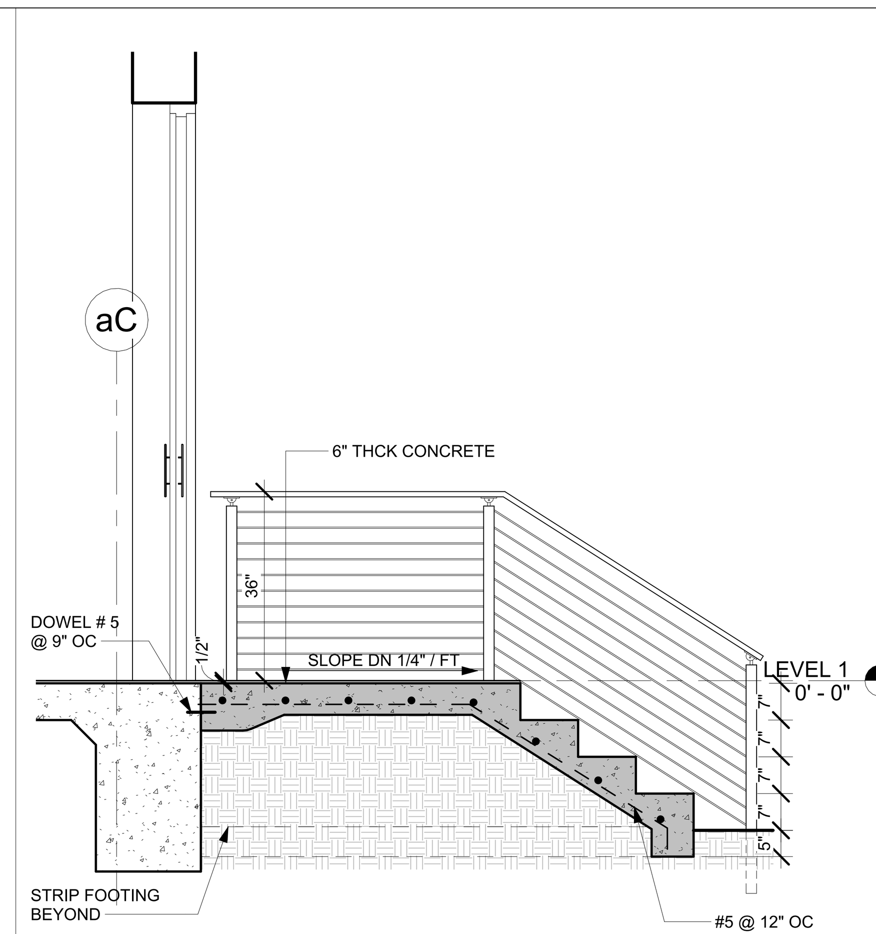

14 A106 SECTION - STAIR 4
SCALE : 1/2" = 1'-0"

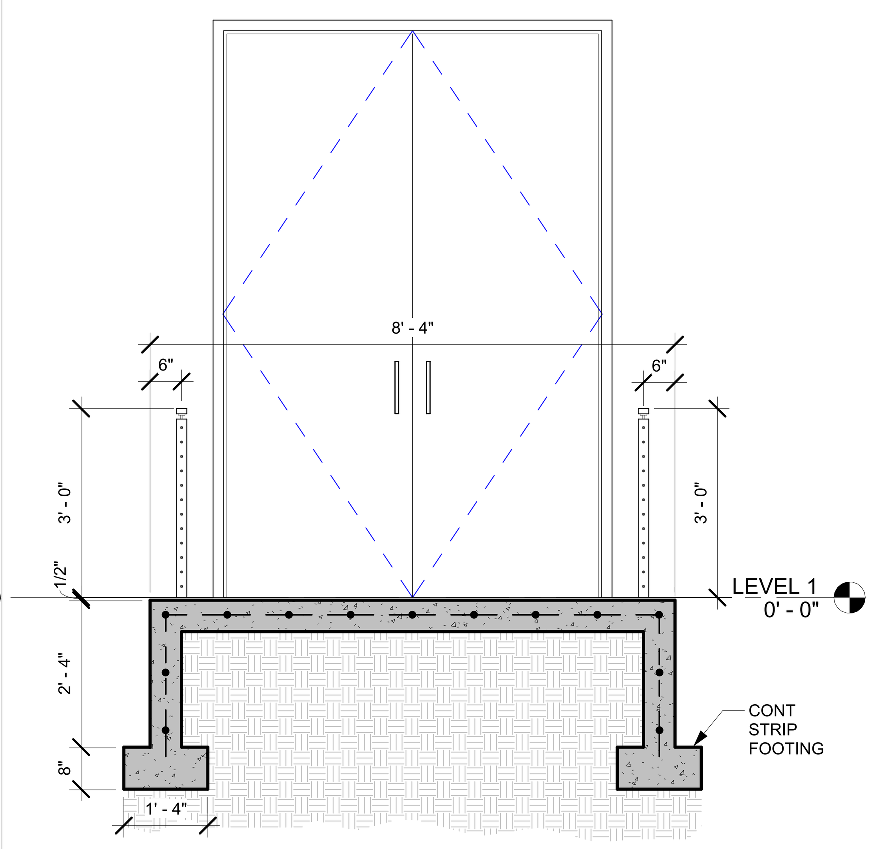

10 A106 SECTION - STAIR 4
SCALE : 1/2" = 1'-0"

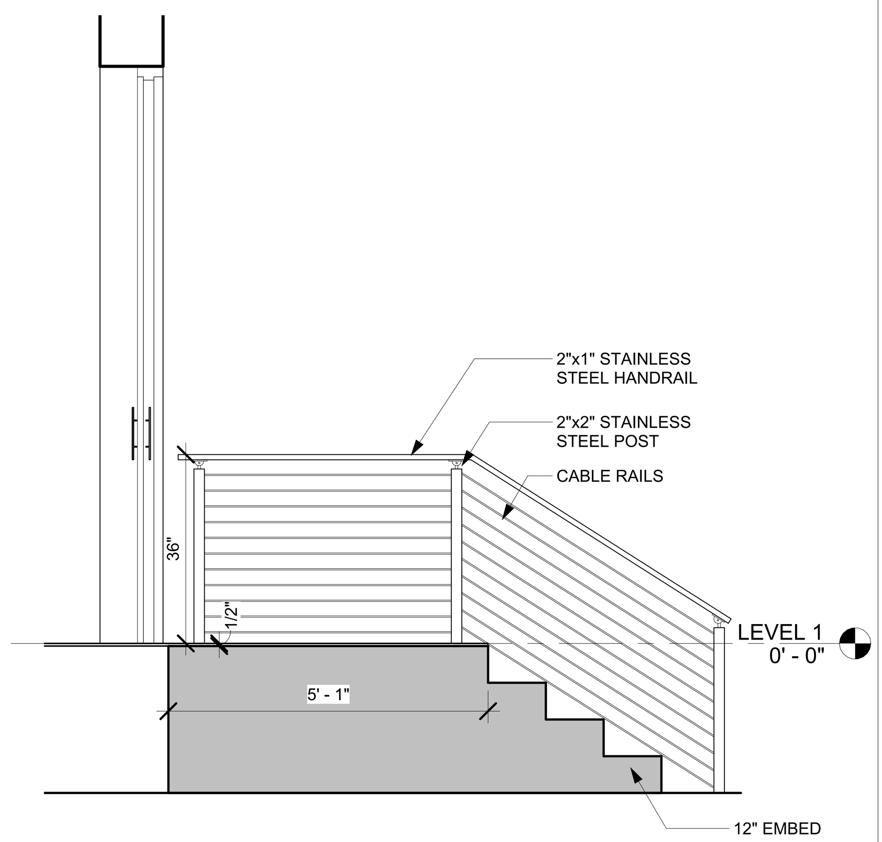

6 A106 ELEVATION - STAIR 4
SCALE : 1/2" = 1'-0"

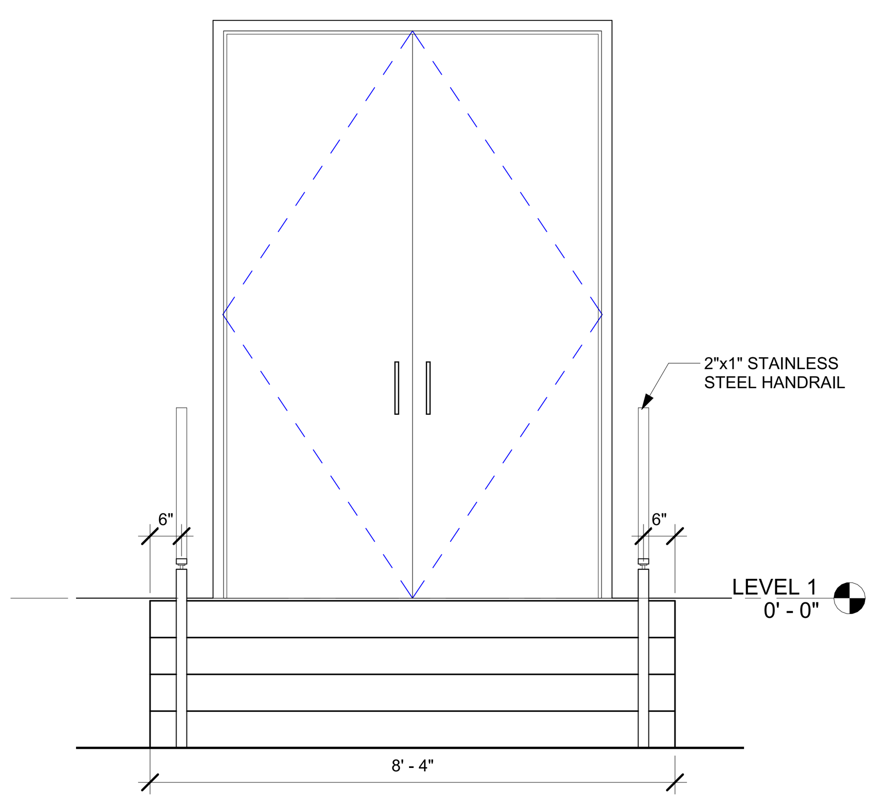

2 A106 ELEVATION - STAIR 4
SCALE : 1/2" = 1'-0"

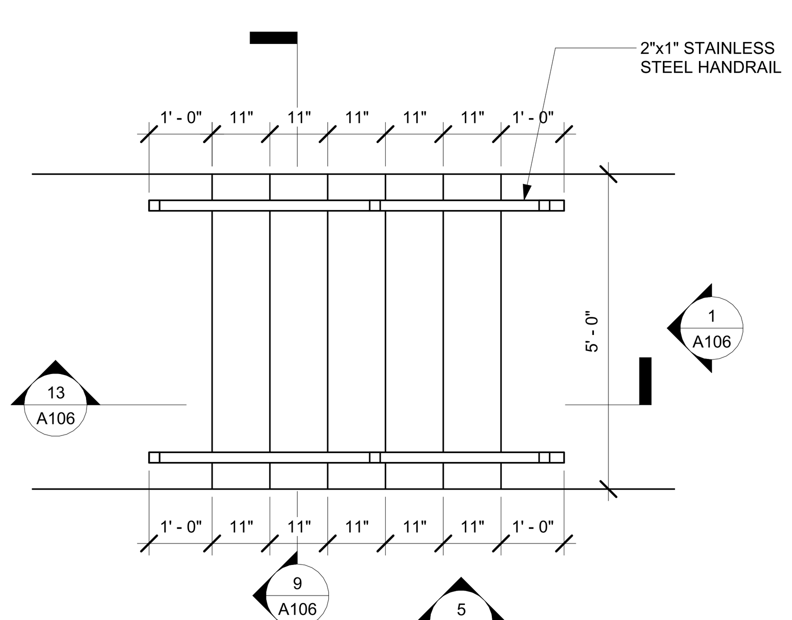

17 A106 ENLARGED PLAN - STAIR 5
SCALE : 1/2" = 1'-0"

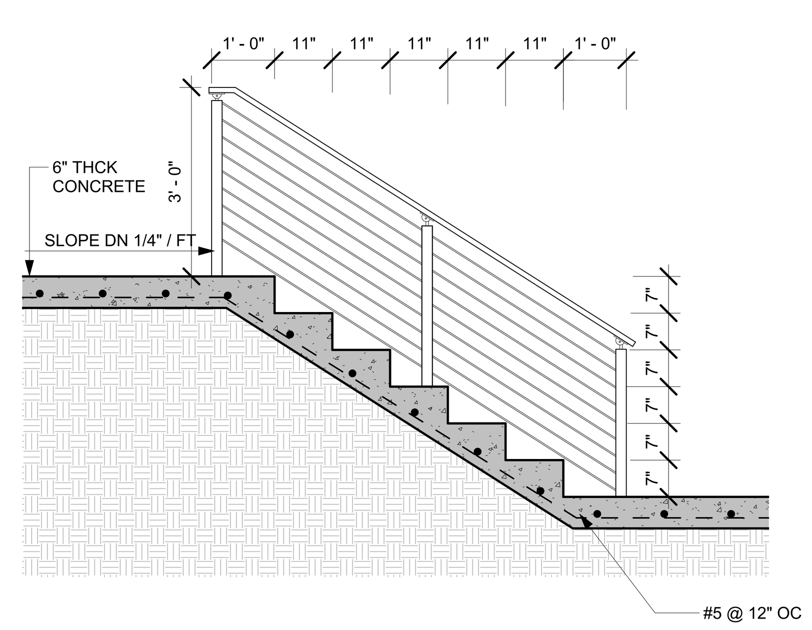

13 A106 SECTION - STAIR 5
SCALE : 1/2" = 1'-0"

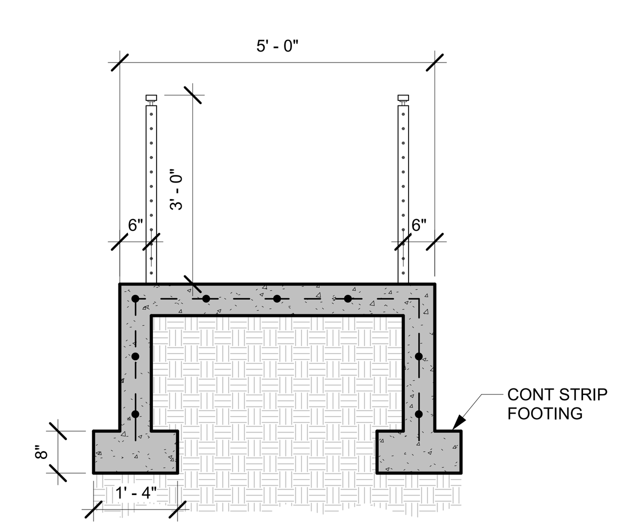

9 A106 SECTION - STAIR 5
SCALE : 1/2" = 1'-0"

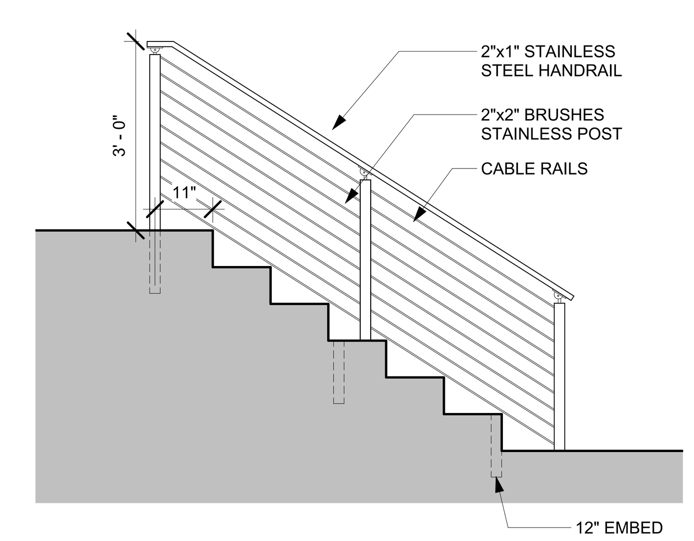

5 A106 ELEVATION - STAIR 5
SCALE : 1/2" = 1'-0"

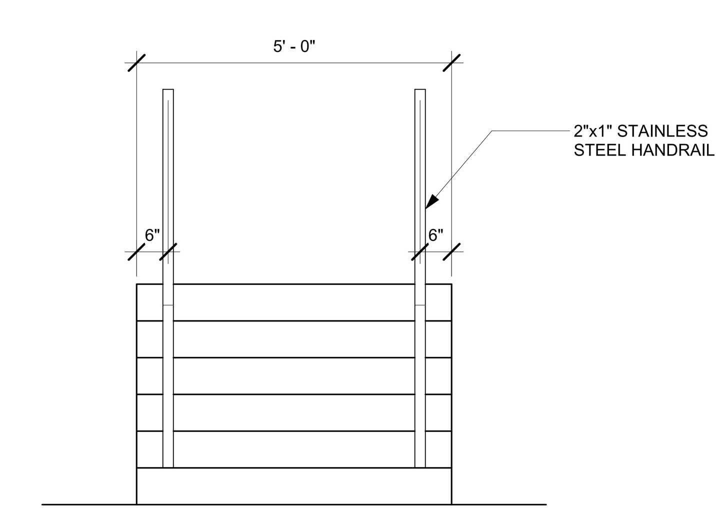

1 A106 ELEVATION - STAIR 5
SCALE : 1/2" = 1'-0"

PLOT DATE: 5/21/2024 4:42:40 PM
FILE PATH: Autodesk Docs://FBC IT Building/FBIT_A23.rvt

FSGROUP® ARCHITECTS
16575 Village Drive
Houston Texas 77040
713 344 1752 PH
fsdesignbuild.com

PROJECT NAME

THE STATE OF TEXAS · FORT BEND COUNTY

INFORMATION TECHNOLGY BUILDING
1419 EUGENE HEIMANN CIRCLE
FORT BEND COUNTY . RICHMOND . TEXAS 77469

CONSULTANTS

PROFESSIONAL SEAL

REGISTERED ARCHITECT FAKHRUDDIN N. SABIR 22631 STATE OF TEXAS

5/15/2024

ISSUED FOR
ISSUED FOR PROPOSALS AND PERMIT

REVISIONS

No.	DESCRIPTION	DATE

KEY PLAN

TRUE NORTH

SHEET TITLE
SITE DETAILS

SCALE 1/2" = 1'-0"
DATE 05/15/2024
PROJECT NUMBER 2319
SHEET NUMBER
A106

LEGEND:

CR	NEW CURB RAMP ALONG SIDEWALK TO MATCH EXISTING CURB RAMPS ALONG STREET. PROVIDE RED INTEGRAL COLORED CONCRETE CURB RAMP WITH TAPERED SIDES AND TOOL JOINT GROOVES 2" OC. MAX. RISE 6" & MAX. SLOPE 1:12. RE: CIVIL FOR GRADES.
CR2	SIMILAR TO 'CR' CURB RAMP WITH CONCRETE TO MATCH ADJACENT PAVEMENT COLOR.
	EXISTING TREE
	NEW TREE - RE: LANDSCAPING
LPB30	LIGHT POLE BASE - HIGH - RE: 1/S402 SET TOP OF CONCRETE BASE 30" ABOVE NEAREST CURB, SIDEWALK OR PAVEMENT
LPB12	LIGHT POLE BASE - LOW - RE: 1/S402 SET TOP OF CONCRETE BASE 12" ABOVE NEAREST CURB, SIDEWALK OR PAVEMENT
BR	BIKE RACK - RE: 18/A102
GL	GROUND LIGHT - RE: ELECTRICAL
LB	LIGHT BOLLARD - RE: ELECTRICAL
FP	FLAGPOLE - RE: 2/S402 FOR BASE
FPL	FLAGPOLE LIGHT - RE: ELECTRICAL
WS	WHEELSTOP - RE: 8/C6.08
AS	ACCESSIBLE SIGNAGE - RE: SHEET A102
	FIRE LANE STRIPING - RE: 12/A102
45°	ACCESSIBLE PAVEMENT STRIPING 4" PAINTED STRIPING 24" OC 45 DEGREES TO BORDER LINES
EA	EXPOSED AGGREGATE FINISH ACCENT AREAS OF PLAZA FLATWORK
EJ	EXPANSION JOINT AT CONCRETE FLATWORK

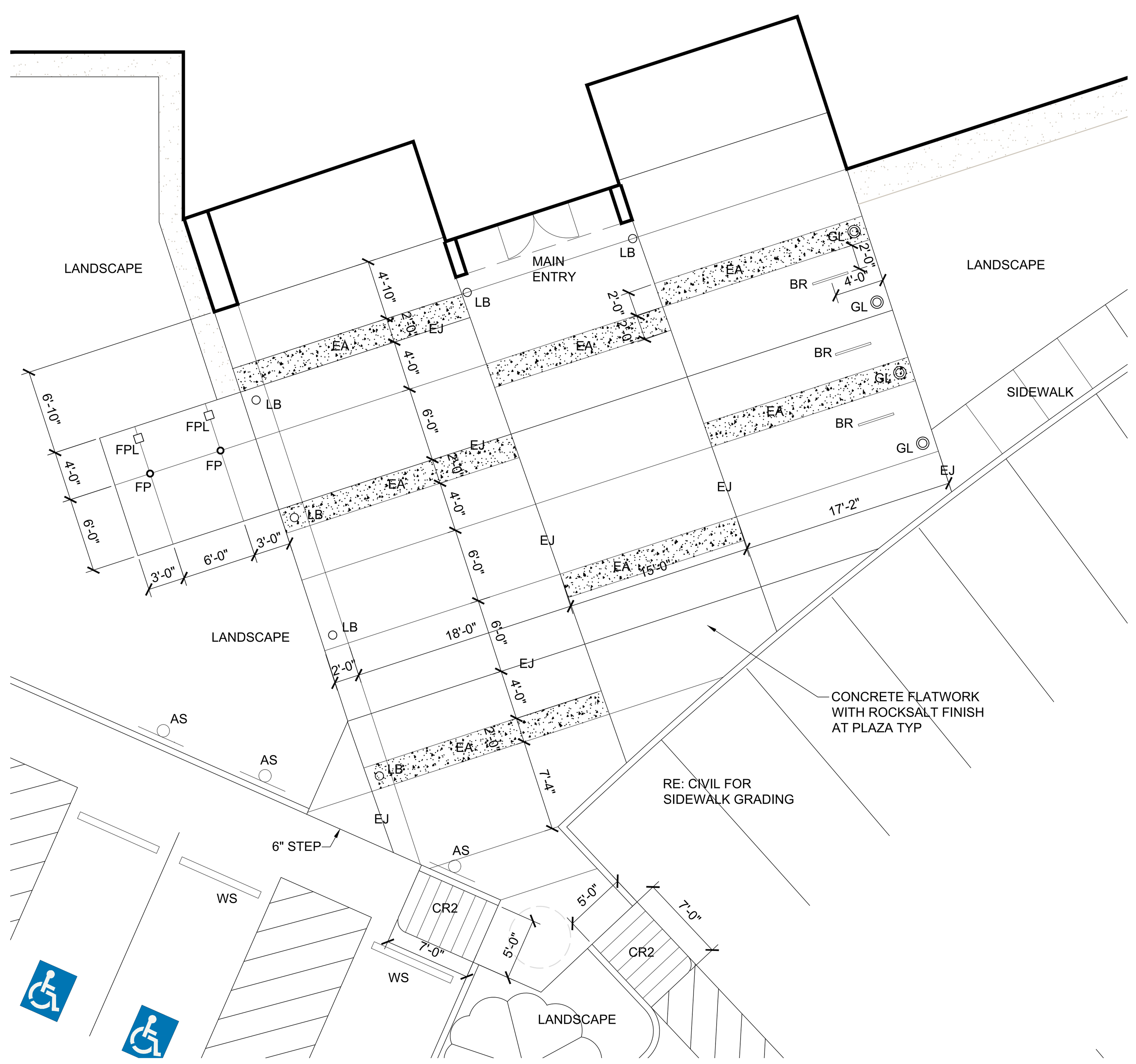

2 A107 ENLARGED SITE PLAN
SCALE : 1/8" = 1'-0"

TRUE NORTH PLAN NORTH

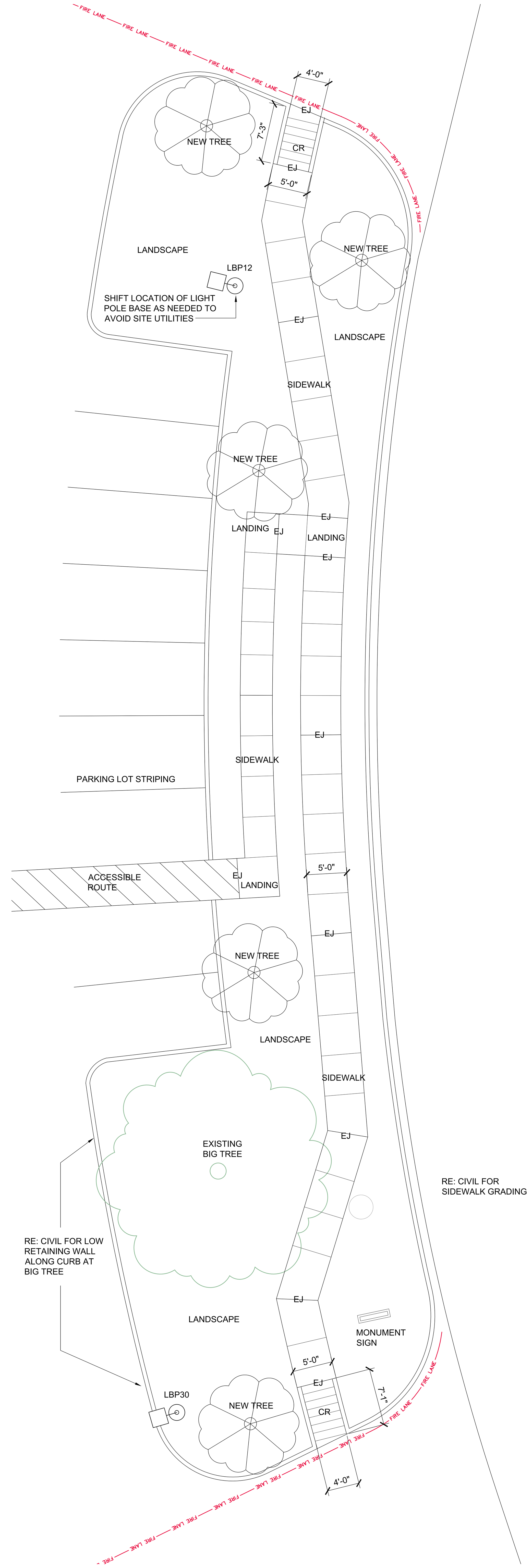

1 A107 ENLARGED SITE PLAN
SCALE : 1/8" = 1'-0"

TRUE NORTH PLAN NORTH

FSGROUP
TEAM+BUILD
16575 Village Drive
Jersey Village Texas 77040
713 344 1752 Office
www.fsdesignbuild.com

PROJECT NAME

THE STATE OF TEXAS FORT BEND COUNTY

INFORMATION TECHNOLOGY BUILDING
EUGENE HEIMANN CIRCLE
FORT BEND COUNTY . TEXAS

CONSULTANTS

PROFESSIONAL SEAL

REGISTERED ARCHITECT FAKHRUDDIN N. SABIR 22631 STATE OF TEXAS
5/15/2024

ISSUED FOR
ISSUED FOR PROPOSALS AND PERMIT

REVISIONS

No.	DESCRIPTION	DATE

KEY PLAN

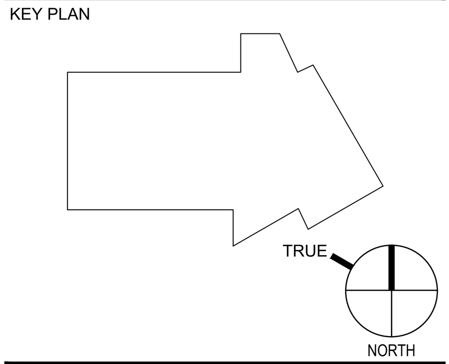

SHEET TITLE
SITE DETAILS

SCALE: As Indicated
DATE: 05/15/2024
PROJECT NUMBER: 2319
SHEET NUMBER
A107

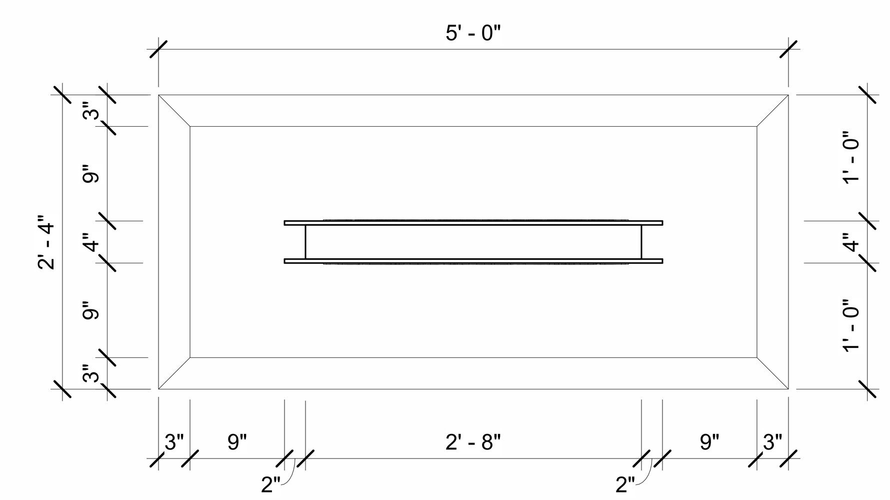

2 A108 BUILDING SIGN - PLAN
SCALE : 1" = 1'-0"

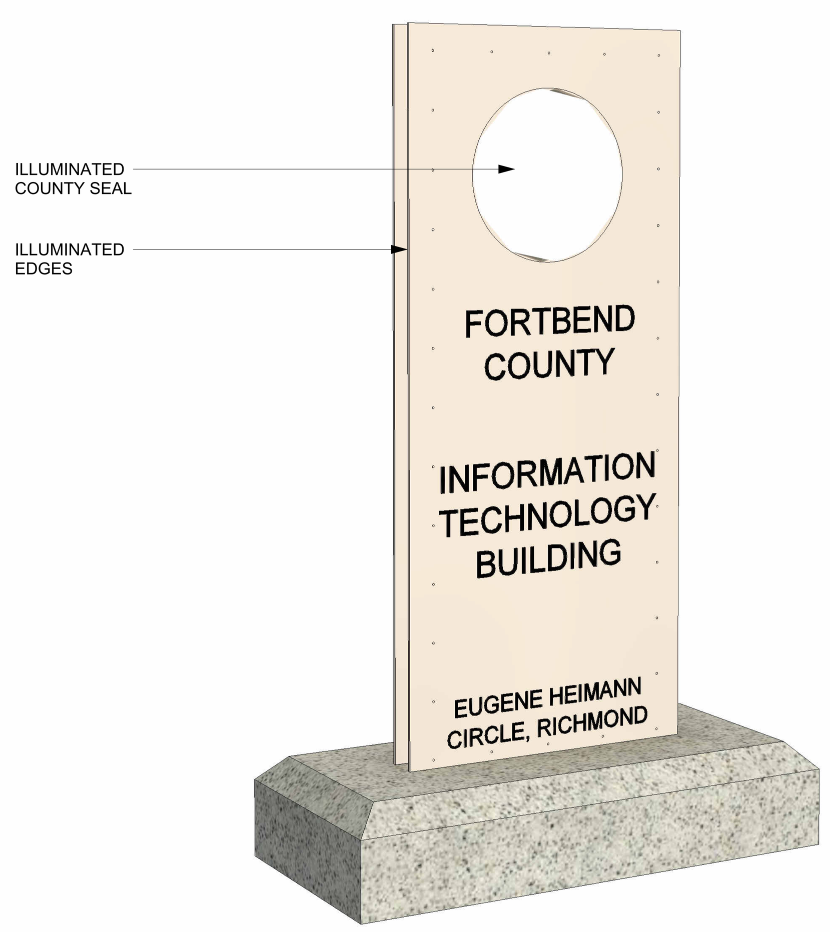

4 A108 BUILDING SIGN - 3D VIEW
SCALE :

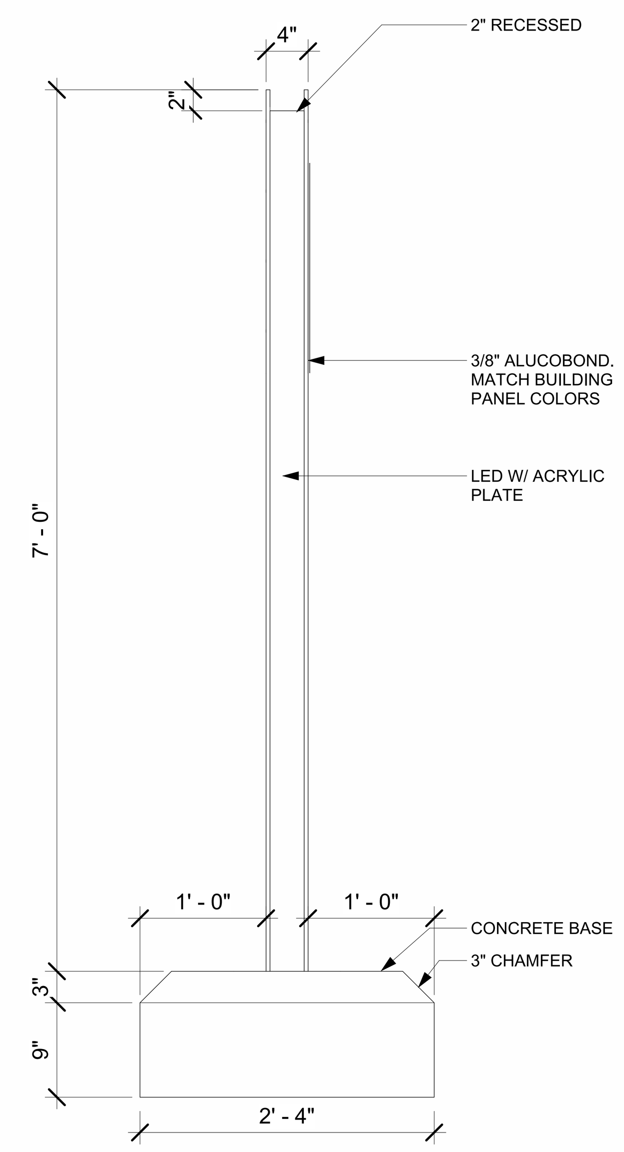

3 A108 BUILDING SIGN - SIDE ELEVATION
SCALE : 1" = 1'-0"

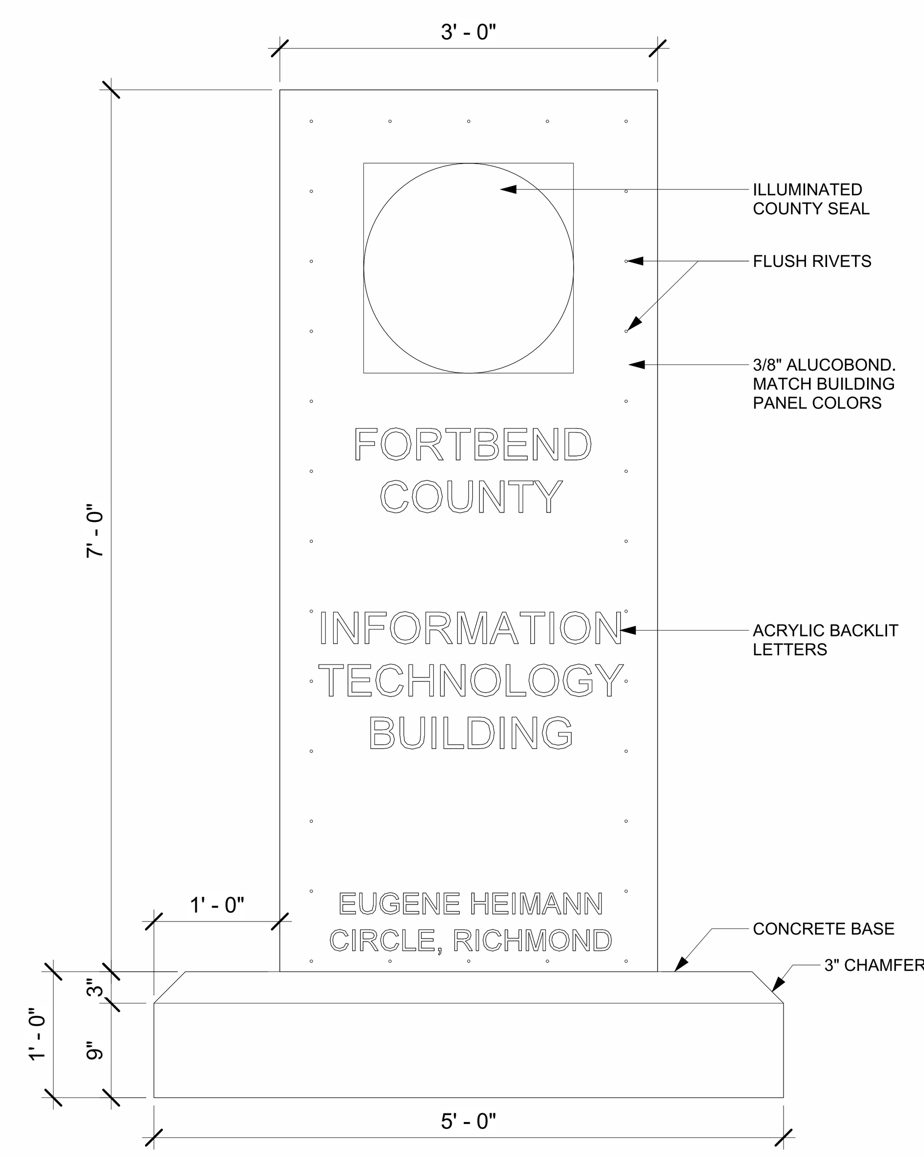

1 A108 BUILDING SIGN - FRONT ELEVATION
SCALE : 1" = 1'-0"

FILE PATH: Autodesk Docs://FBC IT Building/FBIT_A23.rvt

PLOT DATE: 5/21/2024 4:43:26 PM

FSGROUP®
ARCHITECTS
16575 Village Drive
Houston Texas 77040
713 344 1752 PH
fsdesignbuild.com

PROJECT NAME

THE STATE OF TEXAS · FORT BEND COUNTY

INFORMATION TECHNOLOGY BUILDING
1419 EUGENE HEIMANN CIRCLE
FORT BEND COUNTY . RICHMOND . TEXAS 77469

CONSULTANTS

PROFESSIONAL SEAL

REGISTERED ARCHITECT · FAKHRUDDIN N SABIR · 22631 · STATE OF TEXAS
5/15/2024

ISSUED FOR
ISSUED FOR PROPOSALS AND PERMIT

REVISIONS

No.	DESCRIPTION	DATE

KEY PLAN

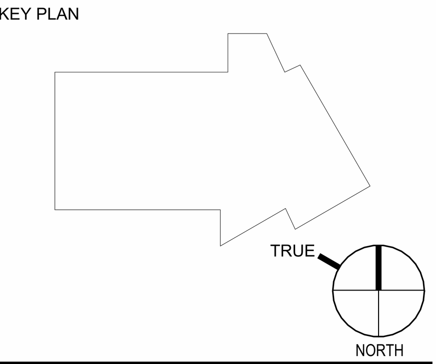

SHEET TITLE
SITE DETAILS

SCALE 1" = 1'-0"
DATE 05/15/2024
PROJECT NUMBER 2319
SHEET NUMBER
A108

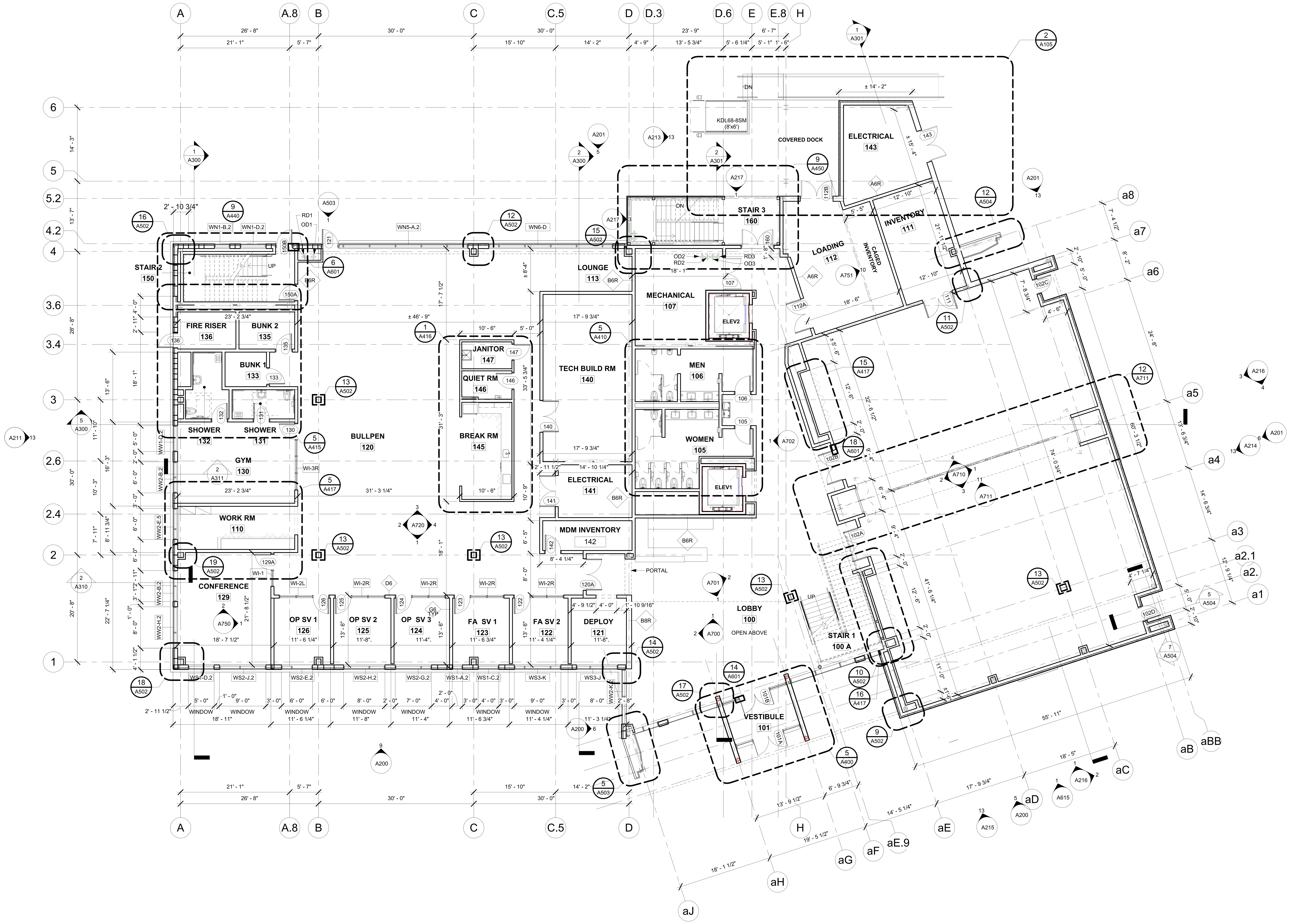

1 A110 FLOOR PLAN: LEVEL 1

SCALE : 1/8" = 1'-0"

FSGROUP ARCHITECTS
16575 Village Drive
Houston Texas 77040
713 344 1752 PH
fsdesignbuild.com

PROJECT NAME

INFORMATION TECHNOLGY BUILDING
1419 EUGENE HEIMANN CIRCLE
FORT BEND COUNTY . RICHMOND . TEXAS 77469

CONSULTANTS

PROFESSIONAL SEAL

ISSUED FOR

ISSUED FOR PROPOSALS AND PERMIT

REVISIONS

No.	DESCRIPTION	DATE

KEY PLAN

SHEET TITLE

FLOOR PLAN LEVEL 1

SCALE 1/8" = 1'-0"

DATE 05/15/2024

PROJECT NUMBER 2319

SHEET NUMBER

A110

FILE PATH: Autodesk Docs://FBC IT Building/FBIT_A23.rvt

PLOT DATE: 5/22/2024 2:56:01 PM

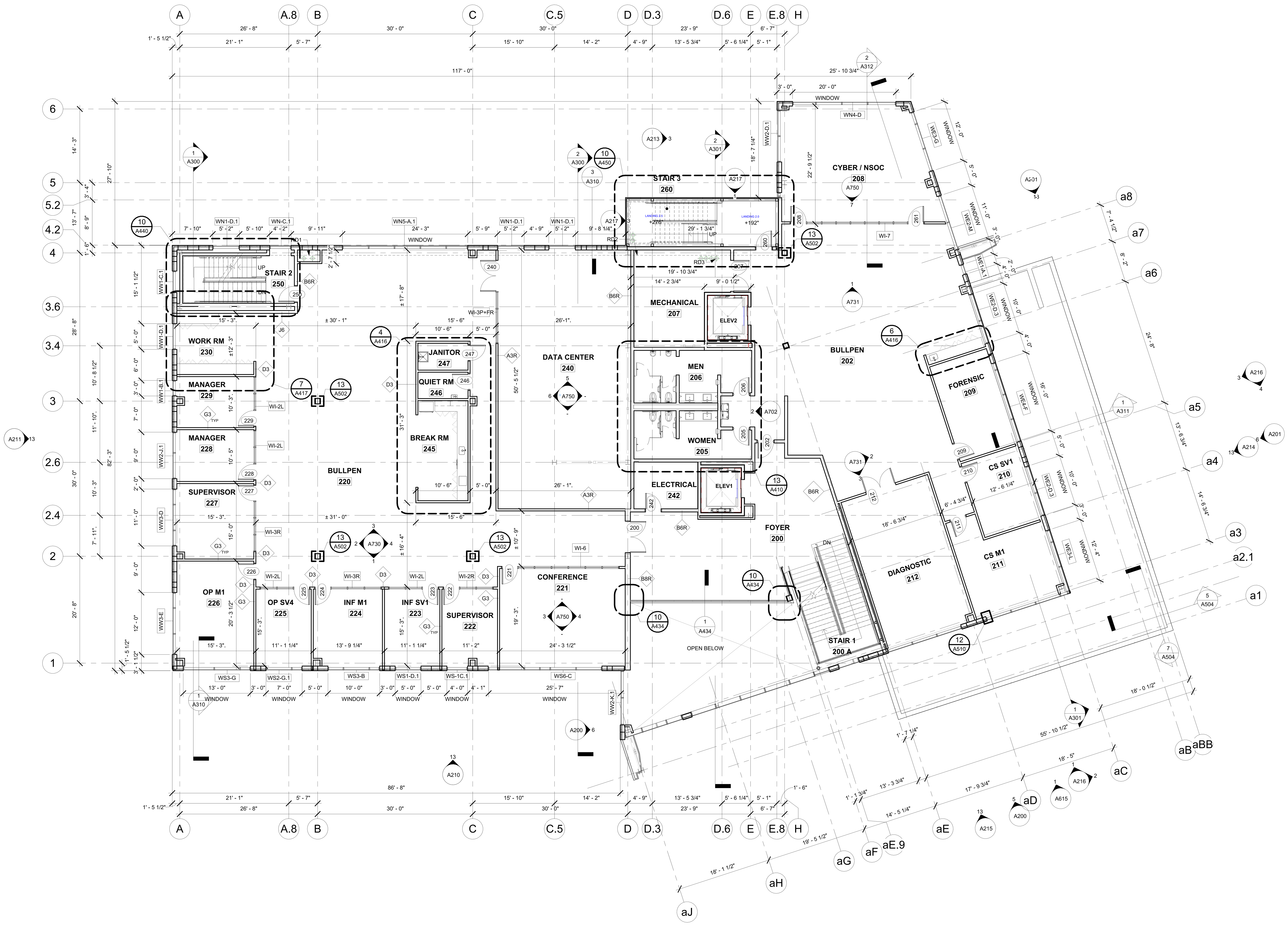

1
A111
FLOOR PLAN: LEVEL 2
SCALE : 1/8" = 1'-0"

FSGROUP ARCHITECTS
16575 Village Drive
Houston Texas 77040
713 344 1752 PH
fsdesignbuild.com

PROJECT NAME

THE STATE OF TEXAS
FORT BEND COUNTY

INFORMATION TECHNOLGY BUILDING
1419 EUGENE HEIMANN CIRCLE
FORT BEND COUNTY . RICHMOND . TEXAS 77469

CONSULTANTS

PROFESSIONAL SEAL

REGISTERED ARCHITECT
FAKHRUDDIN 'N' SABIR
22631
STATE OF TEXAS
5/15/2024

ISSUED FOR
ISSUED FOR PROPOSALS AND PERMIT

REVISIONS

No.	DESCRIPTION	DATE

KEY PLAN

TRUE
NORTH

SHEET TITLE
FLOOR PLAN LEVEL 2

SCALE
1/8" = 1'-0"

DATE
05/15/2024

PROJECT NUMBER
2319

SHEET NUMBER
A111

FILE PATH: Autodesk Docs://FBC IT Building/FBIT_A23.rvt
PLOT DATE: 5/22/2024 2:56:28 PM

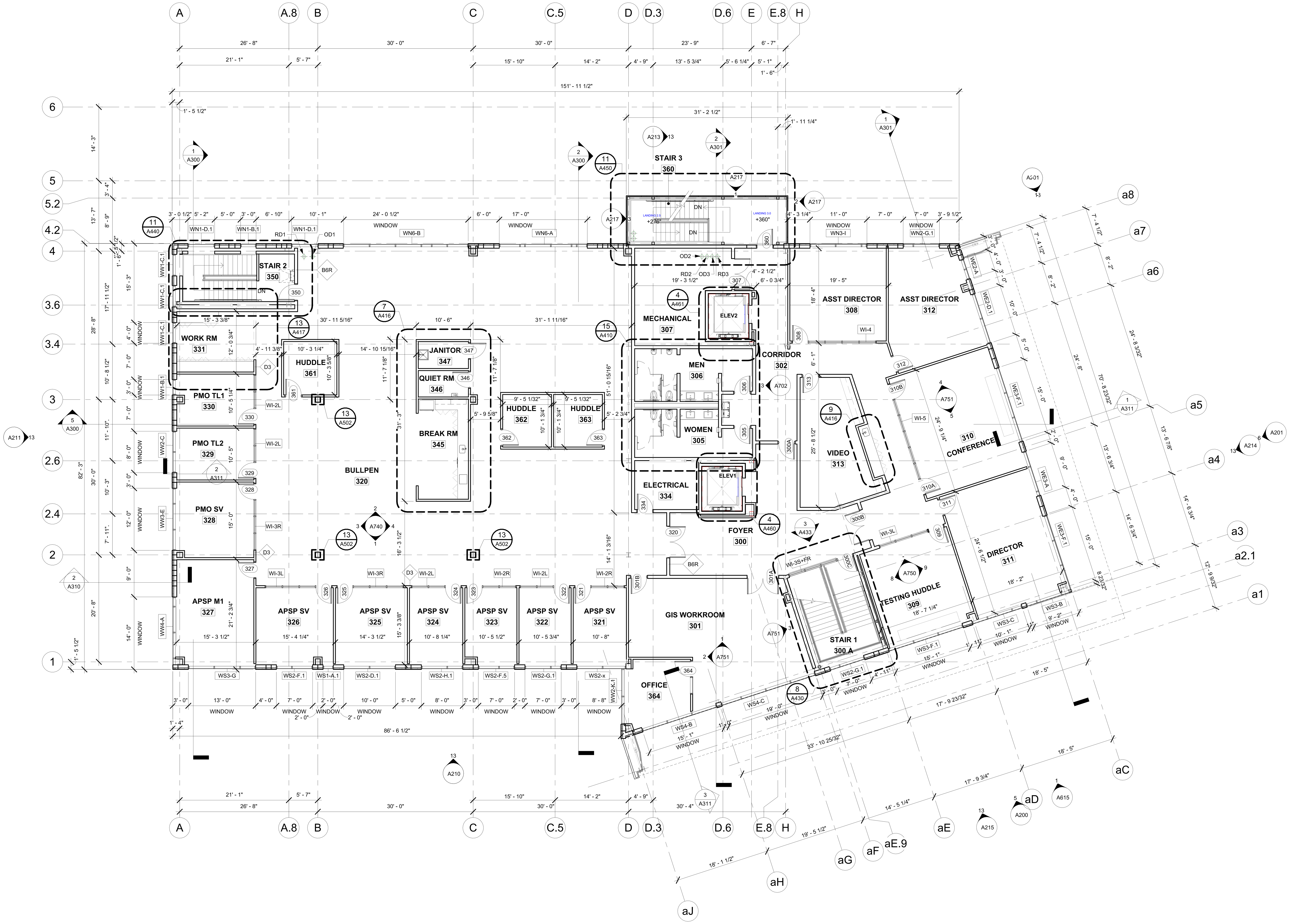

1
A112
FLOOR PLAN: LEVEL 3
SCALE : 1/8" = 1'-0"

FILE PATH: Autodesk Docs://FBC IT Building/FBIT_A23.rvt

PLOT DATE: 5/22/2024 2:56:37 PM

FSGROUP®
ARCHITECTS
16575 Village Drive
Houston Texas 77040
713 344 1752 PH
fsdesignbuild.com

PROJECT NAME

INFORMATION TECHNOLGY BUILDING
1419 EUGENE HEIMANN CIRCLE
FORT BEND COUNTY . RICHMOND . TEXAS 77469

CONSULTANTS

PROFESSIONAL SEAL

ISSUED FOR

ISSUED FOR PROPOSALS AND PERMIT

REVISIONS

No.	DESCRIPTION	DATE

KEY PLAN

SHEET TITLE

FLOOR PLAN LEVEL 3

SCALE
1/8" = 1'-0"

DATE
05/15/2024

PROJECT NUMBER
2319

SHEET NUMBER

A112

GENERAL NOTES: REFLECTED CEILING PLAN

A. REFER TO FINISH SCHEDULE (A900-A901) AND FINISH PLANS (A910-A912) FOR FURTHER DEFINITION OF CEILING MATERIALS AND FINISHES.

B. REFER TO CEILING PLANS FOR CEILING HEIGHTS. ALL HEIGHTS ARE TO BOTTOM OF GRID SYSTEM OR GYP BOARD ABOVE FINISH FLOOR (A.F.F. RELATIVE TO THE FLOOR THAT THE CEILING PLAN IS SHOWN).

C. COORDINATE LOCATIONS OF ALL LIGHT FIXTURES, EXIT SIGNS AND GRILLES WITH M.E.P. DRAWINGS.

D. REFER TO MECHANICAL DRAWINGS FOR HVAC DIFFUSER GRILLE SIZES AND TYPES.

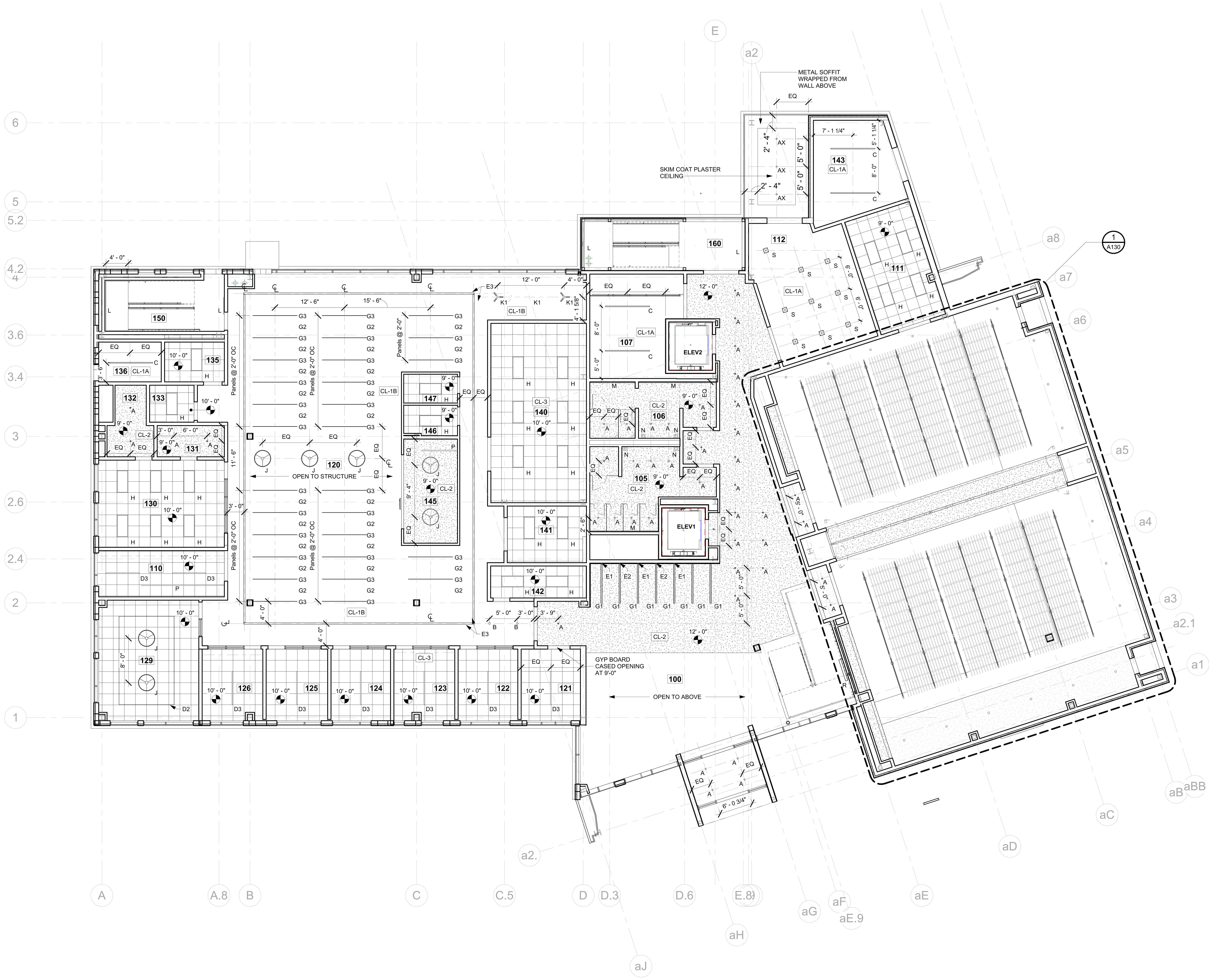

1
A120
REFLECTED CEILING PLAN: LEVEL 1
SCALE : 1/8" = 1'-0"

LEGEND: LIGHT FIXTURES

NOTE: IN ROOMS WITH A SINGLE LIGHT FIXTURE, CENTER THE FIXTURE IN THE SPACE.

A	RECESSED DOWNLIGHT - DEEP RINGO | 3" DIAMETER
AX	EXTERNAL RECESSED DOWNLIGHT | 3" DIAMETER
B	CYLINDER PENDANT CY-PN | 6" DIAMETER
C	CHAIN HUNG STRIP LIGHT | 8' LONG
D1	1" LED STRIP | 10'-0" LONG
D2	1" LED STRIP | RUNS ALONG THE PERIMETER OF THE ROOM
D3	2" LED STRIP | 6'-0" LONG
E1	RECESSED IN WALL 3" ACCOLADE D5 | 3'-0" LONG
E2	RECESSED IN WALL 3" ACCOLADE D5 | 6'-0" LONG
E3	CEILING HUNG 3" ACCOLADE ALD3ST | RUNS ALONG THE PERIMETER OF THE ROOM
F	AALINE LINEAR EMBEDDED COLOUR PENDANT | 8'-0" LONG
G1	ACOUSTIC PANEL WITH LIGHT - ABSORB ABV | 12" HEIGHT 4" WIDTH
G2	ACOUSTIC PANEL WITH LIGHT - ABSORB ABV | 12" HEIGHT 2" WIDTH
G3	ACOUSTIC PANEL - ABSORB ABVSN | 12" HEIGHT 2" WIDTH
H	FLAT PANEL LED - JASPER VISA LIGHTING | 2" x 4"
J	1" LED RING PENDANT | ROUND 36" DIAMETER
K1	1 3/4" X PENDANT - X3 SERIES | 24" DIAMETER
K2	1 3/4" X PENDANT - X3 SERIES | 48" DIAMETER
L	WALL MOUNTED LIGHT | 8" X 24" LONG
M	COVE LINEAR FIXTURE
N	WALL LINEAR SCONCE
P	UNDERCABINET LIGHT
R	DIRECT / INDIRECT LINEAR WALL MOUNTED LIGHT
S	SQUARE DECK MOUNTED LIGHT

LEGEND: CEILING TYPES

CL-1A	OPEN TO STRUCTURE (P-1)
CL-1B	OPEN TO STRUCTURE (P-4)
CL-2	GYPSUM BOARD CEILING
CL-3	24" X 24" ACOUSTICAL CEILING TILES
CL-4	WOOD SLATS CEILING SYSTEM
G3	NON-LIT ACOSTIC PANELS

FSGROUP® ARCHITECTS
16575 Village Drive
Houston Texas 77040
713 344 1752 PH
fsdesignbuild.com

PROJECT NAME

THE STATE OF TEXAS · FORT BEND COUNTY

INFORMATION TECHNOLGY BUILDING
1419 EUGENE HEIMANN CIRCLE
FORT BEND COUNTY . RICHMOND . TEXAS 77469

CONSULTANTS

PROFESSIONAL SEAL

REGISTERED ARCHITECT · FAKHRUDDIN 'N' SIBIR · 26131 · STATE OF TEXAS

5/15/2024

ISSUED FOR
ISSUED FOR PROPOSALS AND PERMIT

REVISIONS

No.	DESCRIPTION	DATE

KEY PLAN

TRUE NORTH

SHEET TITLE
REFLECTED CEILING PLAN LEVEL 1

SCALE: As indicated
DATE: 05/15/2024
PROJECT NUMBER: 2319
SHEET NUMBER
A120

FILE PATH: Autodesk Docs://FBC IT Building/FBIT_A23.rvt
PLOT DATE: 5/21/2024 4:47:02 PM

1 A121 REFLECTED CEILING PLAN: LEVEL 2
SCALE : 1/8" = 1'-0"

GENERAL NOTES: REFLECTED CEILING PLAN

A. REFER TO FINISH SCHEDULE (A900-A901) AND FINISH PLANS (A910-A912) FOR FURTHER DEFINITION OF CEILING MATERIALS AND FINISHES.

B. REFER TO CEILING PLANS FOR CEILING HEIGHTS. ALL HEIGHTS ARE TO BOTTOM OF GRID SYSTEM OR GYP BOARD ABOVE FINISH FLOOR (A.F.F. RELATIVE TO THE FLOOR THAT THE CEILING PLAN IS SHOWN).

C. COORDINATE LOCATIONS OF ALL LIGHT FIXTURES, EXIT SIGNS AND GRILLES WITH M.E.P. DRAWINGS.

D. REFER TO MECHANICAL DRAWINGS FOR HVAC DIFFUSER GRILLE SIZES AND TYPES.

LEGEND: LIGHT FIXTURES

NOTE:
IN ROOMS WITH A SINGLE LIGHT FIXTURE, CENTER THE FIXTURE IN THE SPACE.

A	RECESSED DOWNLIGHT - DEEP RINGO | 3" DIAMETER
AX	EXTERNAL RECESSED DOWNLIGHT | 3" DIAMETER
B	CYLINDER PENDANT CY-PN | 6" DIAMETER
C	CHAIN HUNG STRIP LIGHT | 8' LONG
D1	1" LED STRIP | 10'-0" LONG
D2	1" LED STRIP | RUNS ALONG THE PERIMETER OF THE ROOM
D3	2" LED STRIP | 6'-0" LONG
E1	RECESSED IN WALL 3" ACCOLADE D5 | 3'-0" LONG
E2	RECESSED IN WALL 3" ACCOLADE D5 | 6'-0" LONG
E3	CEILING HUNG 3" ACCOLADE ALD3ST | RUNS ALONG THE PERIMETER OF THE ROOM
F	AALINE LINEAR EMBEDDED COLOUR PENDANT | 8'-0" LONG
G1	ACOUSTIC PANEL WITH LIGHT - ABSORB ABV | 12" HEIGHT 4" WIDTH
G2	ACOUSTIC PANEL WITH LIGHT - ABSORB ABV | 12" HEIGHT 2" WIDTH
G3	ACOUSTIC PANEL - ABSORB ABVSN | 12" HEIGHT 2" WIDTH
H	FLAT PANEL LED - JASPER VISA LIGHTING | 2" x 4"
J	1" LED RING PENDANT | ROUND 36" DIAMETER
K1	1 3/4" X PENDANT - X3 SERIES | 24" DIAMETER
K2	1 3/4" X PENDANT - X3 SERIES | 48" DIAMETER
L	WALL MOUNTED LIGHT | 8" X 24" LONG
M	COVE LINEAR FIXTURE
N	WALL LINEAR SCONCE
P	UNDERCABINET LIGHT
R	DIRECT / INDIRECT LINEAR WALL MOUNTED LIGHT
S	SQUARE DECK MOUNTED LIGHT

LEGEND: CEILING TYPES

CL-1A	OPEN TO STRUCTURE (P-1)
CL-1B	OPEN TO STRUCTURE (P-4)
CL-2	GYPSUM BOARD CEILING
CL-3	24" X 24" ACOUSTICAL CEILING TILES
CL-4	WOOD SLATS CEILING SYSTEM
G3	NON-LIT ACOSTIC PANELS

FSGROUP ARCHITECTS
16575 Village Drive
Houston Texas 77040
713 344 1752 PH
fsdesignbuild.com

PROJECT NAME

INFORMATION TECHNOLGY BUILDING
1419 EUGENE HEIMANN CIRCLE
FORT BEND COUNTY . RICHMOND . TEXAS 77469

CONSULTANTS

PROFESSIONAL SEAL

ISSUED FOR
ISSUED FOR PROPOSALS AND PERMIT

REVISIONS

No.	DESCRIPTION	DATE

KEY PLAN

SHEET TITLE
REFLECTED CEILING PLAN LEVEL 2

SCALE: As indicated
DATE: 05/15/2024
PROJECT NUMBER: 2319
SHEET NUMBER: **A121**

FILE PATH: Autodesk Docs://FBC IT Building/FBIT_A23.rvt
PLOT DATE: 5/21/2024 4:47:21 PM

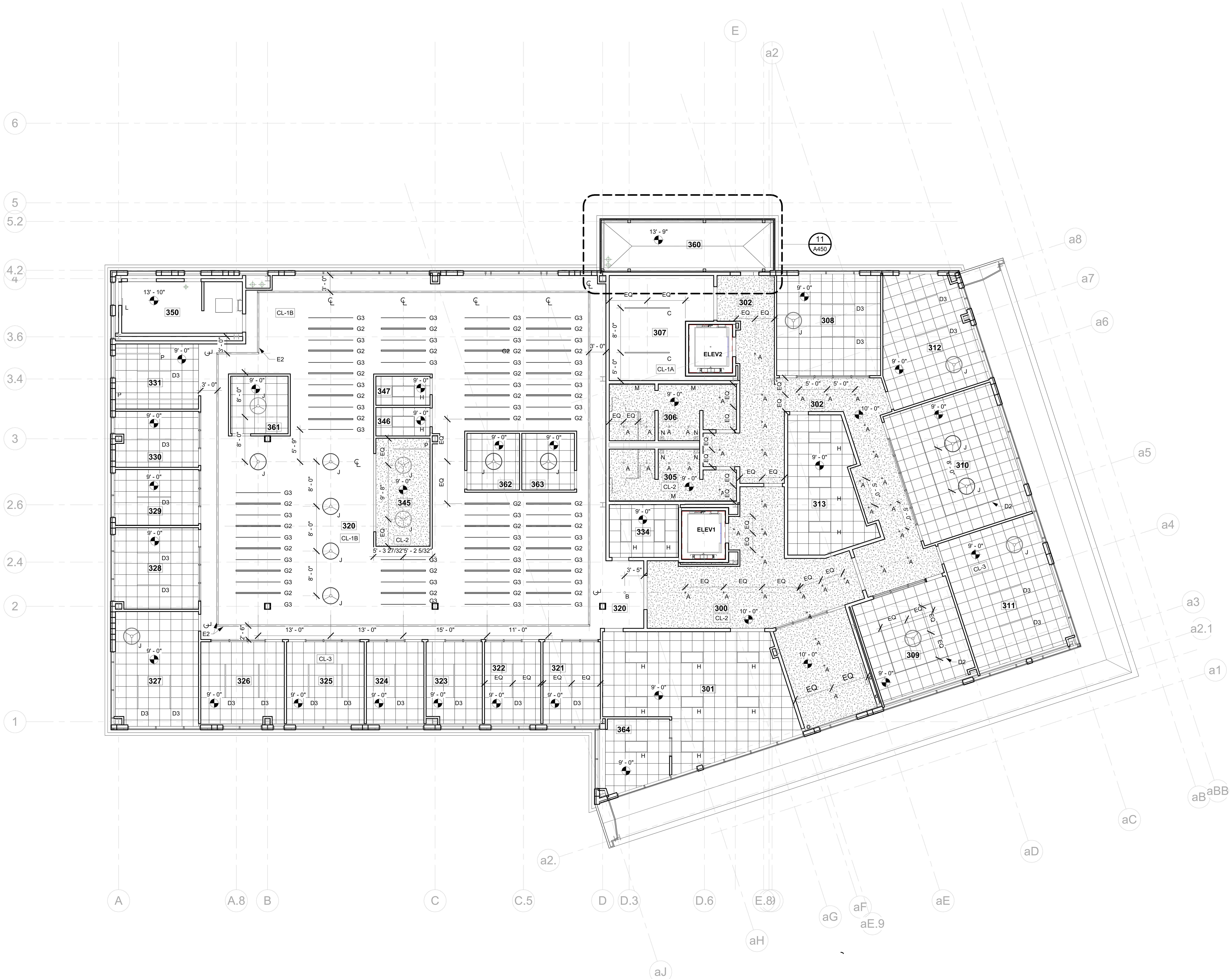

1 A122 REFLECTED CEILING PLAN- LEVEL 3
SCALE : 1/8" = 1'-0"

GENERAL NOTES: REFLECTED CEILING PLAN

A. REFER TO FINISH SCHEDULE (A900-A901) AND FINISH PLANS (A910-A912) FOR FURTHER DEFINITION OF CEILING MATERIALS AND FINISHES.

B. REFER TO CEILING PLANS FOR CEILING HEIGHTS. ALL HEIGHTS ARE TO BOTTOM OF GRID SYSTEM OR GYP BOARD ABOVE FINISH FLOOR (A.F.F. RELATIVE TO THE FLOOR THAT THE CEILING PLAN IS SHOWN).

C. COORDINATE LOCATIONS OF ALL LIGHT FIXTURES, EXIT SIGNS AND GRILLES WITH M.E.P. DRAWINGS.

D. REFER TO MECHANICAL DRAWINGS FOR HVAC DIFFUSER GRILLE SIZES AND TYPES.

LEGEND: LIGHT FIXTURES

NOTE:
IN ROOMS WITH A SINGLE LIGHT FIXTURE, CENTER THE FIXTURE IN THE SPACE.

A	RECESSED DOWNLIGHT - DEEP RINGO | 3" DIAMETER
AX	EXTERNAL RECESSED DOWNLIGHT | 3" DIAMETER
B	CYLINDER PENDANT CY-PN | 6" DIAMETER
C	CHAIN HUNG STRIP LIGHT | 8' LONG
D1	1" LED STRIP | 10'-0" LONG
D2	1" LED STRIP | RUNS ALONG THE PERIMETER OF THE ROOM
D3	2" LED STRIP | 6'-0" LONG
E1	RECESSED IN WALL 3" ACCOLADE D5 | 3'-0" LONG
E2	RECESSED IN WALL 3" ACCOLADE D5 | 6'-0" LONG
E3	CEILING HUNG 3" ACCOLADE ALD3ST | RUNS ALONG THE PERIMETER OF THE ROOM
F	AALINE LINEAR EMBEDDED COLOUR PENDANT | 8'-0" LONG
G1	ACOUSTIC PANEL WITH LIGHT - ABSORB ABV | 12" HEIGHT 4" WIDTH
G2	ACOUSTIC PANEL WITH LIGHT - ABSORB ABV | 12" HEIGHT 2" WIDTH
G3	ACOUSTIC PANEL - ABSORB ABVSN | 12" HEIGHT 2" WIDTH
H	FLAT PANEL LED - JASPER VISA LIGHTING | 2" x 4"
J	1" LED RING PENDANT | ROUND 36" DIAMETER
K1	1 3/4" X PENDANT - X3 SERIES | 24" DIAMETER
K2	1 3/4" X PENDANT - X3 SERIES | 48" DIAMETER
L	WALL MOUNTED LIGHT | 8" X 24" LONG
M	COVE LINEAR FIXTURE
N	WALL LINEAR SCONCE
P	UNDERCABINET LIGHT
R	DIRECT / INDIRECT LINEAR WALL MOUNTED LIGHT
S	SQUARE DECK MOUNTED LIGHT

LEGEND: CEILING TYPES

CL-1A	OPEN TO STRUCTURE (P-1)
CL-1B	OPEN TO STRUCTURE (P-4)
CL-2	GYPSUM BOARD CEILING
CL-3	24" X 24" ACOUSTICAL CEILING TILES
CL-4	WOOD SLATS CEILING SYSTEM
G3	NON-LIT ACOSTIC PANELS

FSGROUP ARCHITECTS
16575 Village Drive
Houston Texas 77040
713 344 1752 PH
fsdesignbuild.com

PROJECT NAME

INFORMATION TECHNOLGY BUILDING
1419 EUGENE HEIMANN CIRCLE
FORT BEND COUNTY . RICHMOND . TEXAS 77469

CONSULTANTS

PROFESSIONAL SEAL

ISSUED FOR
ISSUED FOR PROPOSALS AND PERMIT

REVISIONS

No.	DESCRIPTION	DATE

KEY PLAN

SHEET TITLE
REFLECTED CEILING PLAN LEVEL 3

SCALE: As indicated
DATE: 05/15/2024
PROJECT NUMBER: 2319
SHEET NUMBER: A122

FILE PATH: Autodesk Docs://FBC IT Building/FBIT_A23.rvt
PLOT DATE: 5/21/2024 4:47:36 PM

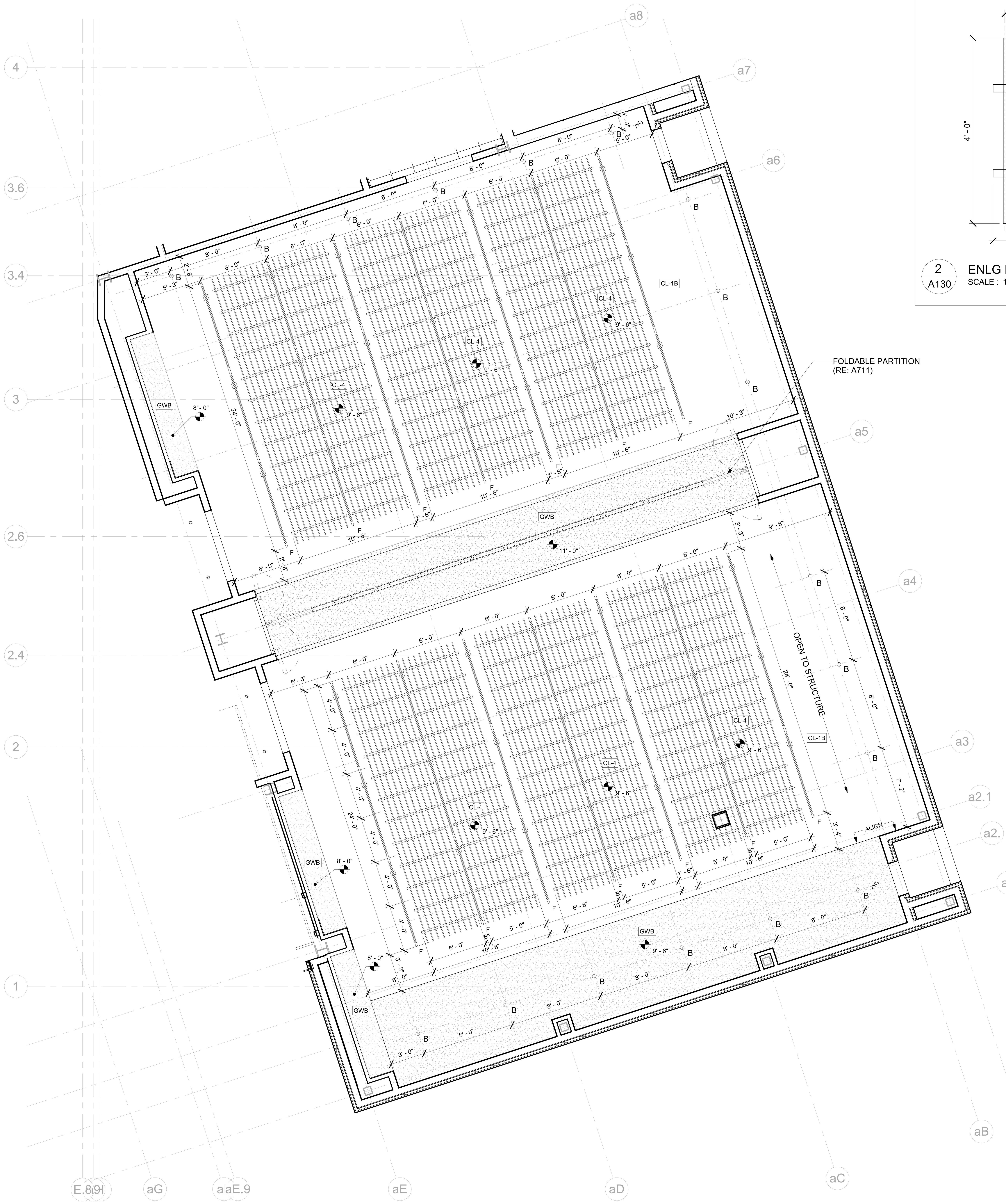

1 A130 ENLG CEILING PLAN: TRAINING RM 102
SCALE : 1/4" = 1'-0"

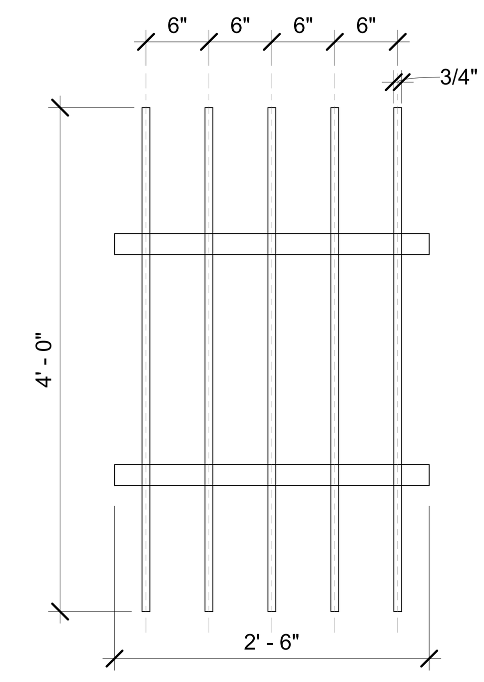

2 A130 ENLG PLAN : CEILING UNIT CL-4
SCALE : 1" = 1'-0"

GENERAL NOTES: REFLECTED CEILING PLAN

A. REFER TO FINISH SCHEDULE (A900-A901) AND FINISH PLANS (A910-A912) FOR FURTHER DEFINITION OF CEILING MATERIALS AND FINISHES.

B. REFER TO CEILING PLANS FOR CEILING HEIGHTS. ALL HEIGHTS ARE TO BOTTOM OF GRID SYSTEM OR GYP BOARD ABOVE FINISH FLOOR (A.F.F. RELATIVE TO THE FLOOR THAT THE CEILING PLAN IS SHOWN).

C. COORDINATE LOCATIONS OF ALL LIGHT FIXTURES, EXIT SIGNS AND GRILLES WITH M.E.P. DRAWINGS.

D. REFER TO MECHANICAL DRAWINGS FOR HVAC DIFFUSER GRILLE SIZES AND TYPES.

LEGEND: LIGHT FIXTURES

NOTE:
IN ROOMS WITH A SINGLE LIGHT FIXTURE, CENTER THE FIXTURE IN THE SPACE.

A	RECESSED DOWNLIGHT - DEEP RINGO | 3" DIAMETER
AX	EXTERNAL RECESSED DOWNLIGHT | 3" DIAMETER
B	CYLINDER PENDANT CY-PN | 6" DIAMETER
C	CHAIN HUNG STRIP LIGHT | 8' LONG
D1	1" LED STRIP | 10'-0" LONG
D2	1" LED STRIP | RUNS ALONG THE PERIMETER OF THE ROOM
D3	2" LED STRIP | 6'-0" LONG
E1	RECESSED IN WALL 3" ACCOLADE D5 | 3'-0" LONG
E2	RECESSED IN WALL 3" ACCOLADE D5 | 6'-0" LONG
E3	CEILING HUNG 3" ACCOLADE ALD3ST | RUNS ALONG THE PERIMETER OF THE ROOM
F	AALINE LINEAR EMBEDDED COLOUR PENDANT | 8'-0" LONG
G1	ACOUSTIC PANEL WITH LIGHT - ABSORB ABV | 12" HEIGHT 4" WIDTH
G2	ACOUSTIC PANEL WITH LIGHT - ABSORB ABV | 12" HEIGHT 2" WIDTH
G3	ACOUSTIC PANEL - ABSORB ABVSN | 12" HEIGHT 2" WIDTH
H	FLAT PANEL LED - JASPER VISA LIGHTING | 2" x 4"
J	1" LED RING PENDANT | ROUND 36" DIAMETER
K1	1 3/4" X PENDANT - X3 SERIES | 24" DIAMETER
K2	1 3/4" X PENDANT - X3 SERIES | 48" DIAMETER
L	WALL MOUNTED LIGHT | 8" X 24" LONG
M	COVE LINEAR FIXTURE
N	WALL LINEAR SCONCE
P	UNDERCABINET LIGHT
R	DIRECT / INDIRECT LINEAR WALL MOUNTED LIGHT
S	SQUARE DECK MOUNTED LIGHT

LEGEND: CEILING TYPES

CL-1A	OPEN TO STRUCTURE (P-1)
CL-1B	OPEN TO STRUCTURE (P-4)
CL-2	GYPSUM BOARD CEILING
CL-3	24" X 24" ACOUSTICAL CEILING TILES
CL-4	WOOD SLATS CEILING SYSTEM
G3	NON-LIT ACOSTIC PANELS

FSGROUP® ARCHITECTS
16575 Village Drive
Houston Texas 77040
713 344 1752 PH
fsdesignbuild.com

PROJECT NAME

THE STATE OF TEXAS FORT BEND COUNTY

INFORMATION TECHNOLGY BUILDING
1419 EUGENE HEIMANN CIRCLE
FORT BEND COUNTY . RICHMOND . TEXAS 77469

CONSULTANTS

PROFESSIONAL SEAL

REGISTERED ARCHITECT FAKHRUDDIN N. SABIR 22631 STATE OF TEXAS
5/15/2024

ISSUED FOR
ISSUED FOR PROPOSALS AND PERMIT

REVISIONS

No.	DESCRIPTION	DATE

KEY PLAN

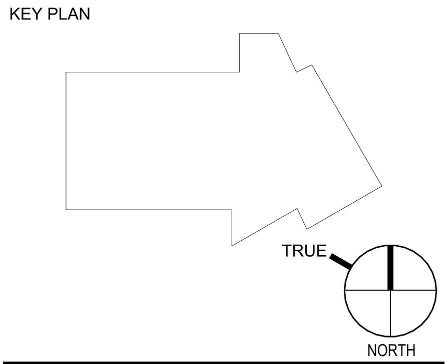

SHEET TITLE
ENLARGED RCP
TRAINING ROOM 102

SCALE: As indicated
DATE: 05/15/2024
PROJECT NUMBER: 2319
SHEET NUMBER
A130

FILE PATH: Autodesk Docs://FBC IT Building/FBIT_A23.rvt
PLOT DATE: 5/21/2024 4:48:01 PM

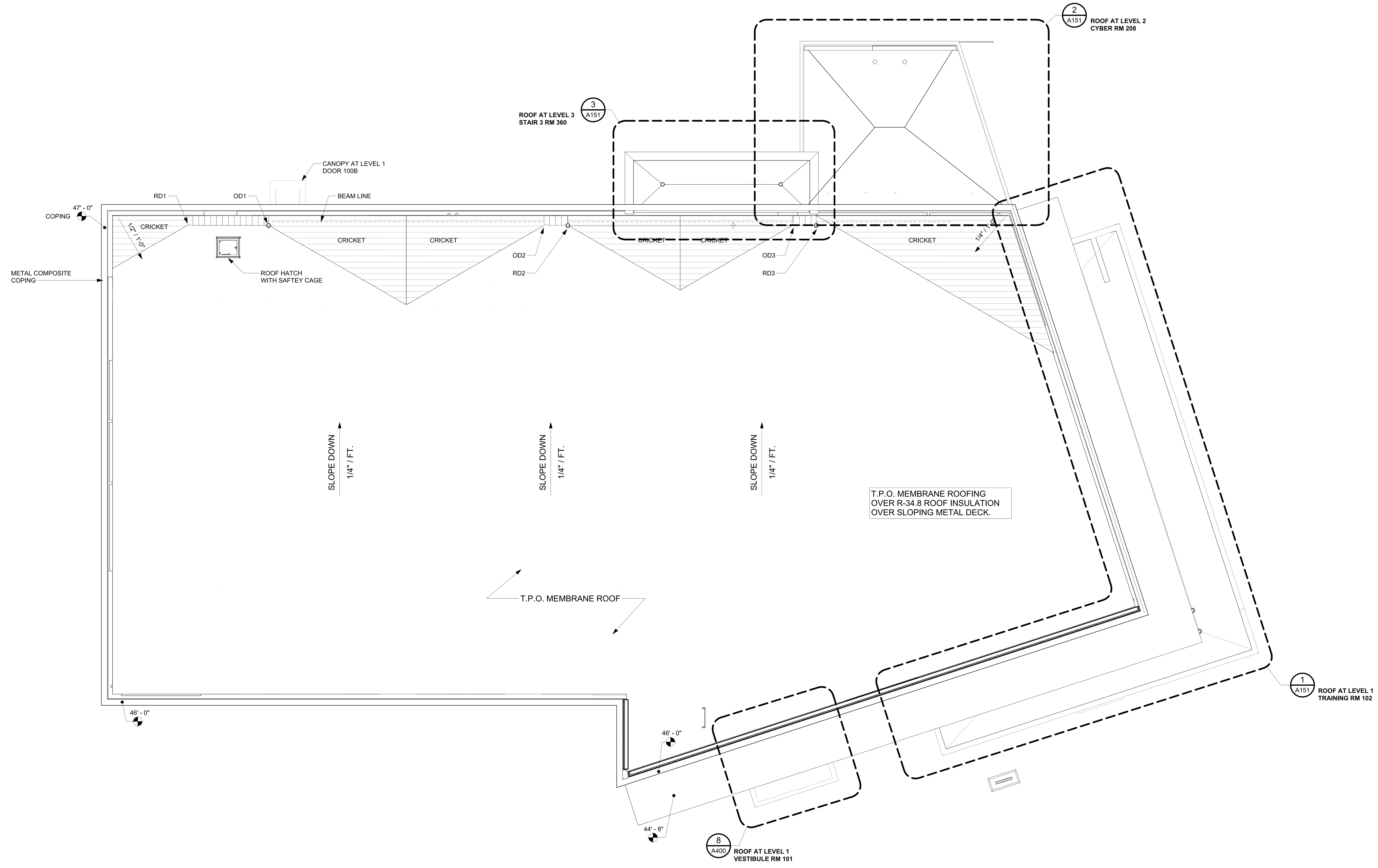

1 A150 HIGH ROOF PLAN
SCALE : 1/8" = 1'-0"

PLOT DATE: 5/21/2024 4:48:27 PM

FILE PATH: Autodesk Docs://FBC IT Building/FBIT_A23.rvt

FSGROUP®
ARCHITECTS
16575 Village Drive
Houston Texas 77040
713 344 1752 PH
fsdesignbuild.com

PROJECT NAME

THE STATE OF TEXAS
FORT BEND COUNTY

INFORMATION TECHNOLGY BUILDING
1419 EUGENE HEIMANN CIRCLE
FORT BEND COUNTY . RICHMOND . TEXAS 77469

CONSULTANTS

PROFESSIONAL SEAL

REGISTERED ARCHITECT
FAKHRUDDIN 'N' SABIR
22631
STATE OF TEXAS
5/15/2024

ISSUED FOR
ISSUED FOR PROPOSALS AND PERMIT

REVISIONS

No.	DESCRIPTION	DATE

KEY PLAN

TRUE NORTH

SHEET TITLE
ROOF PLAN

SCALE 1/8" = 1'-0"
DATE 05/15/2024
PROJECT NUMBER 2319
SHEET NUMBER
A150

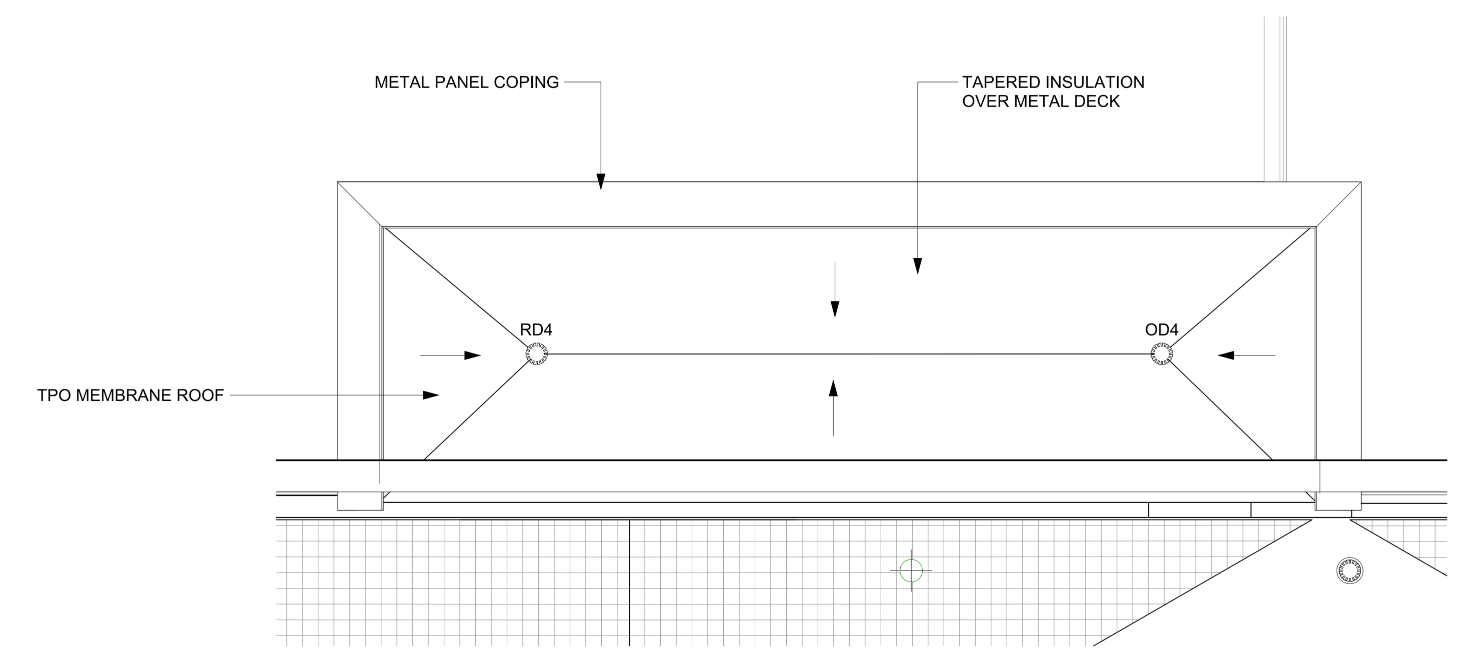

3
A151
ENLG ROOF PLAN: LEVEL 3 @ STAIR 3 RM 306
SCALE : 1/4" = 1'-0"

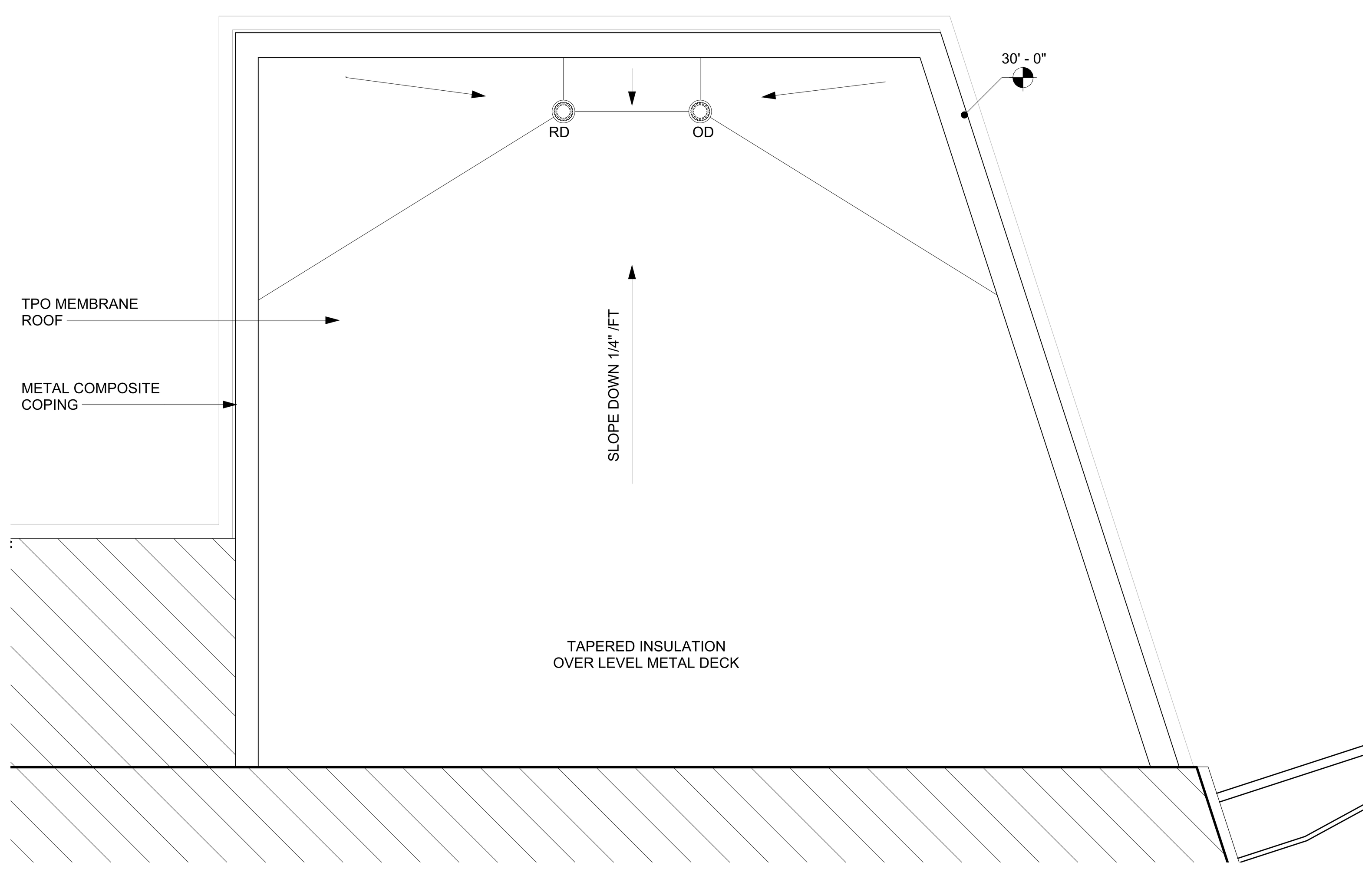

2
A151
ENLG ROOF PLAN: LEVEL 2 @ CYBER / NSOC RM 208
SCALE : 1/4" = 1'-0"

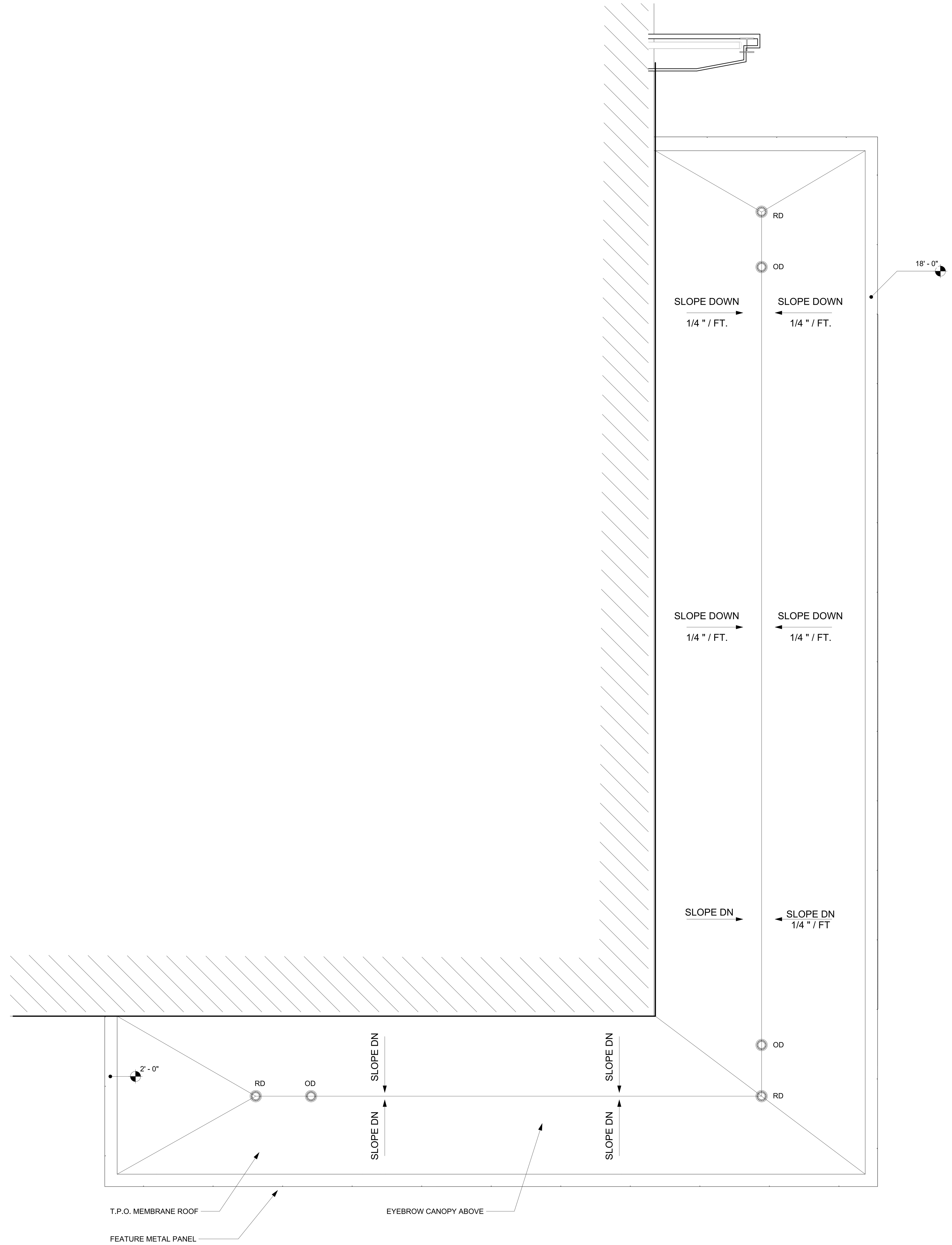

1
A151
ENLG ROOF PLAN: LEVEL 1 @ TRAINING RM 102
SCALE : 1/4" = 1'-0"

FILE PATH: Autodesk Docs://FBC IT Building/FBIT_A23.rvt

PLOT DATE: 5/21/2024 4:48:41 PM

FSGROUP®
ARCHITECTS
16575 Village Drive
Houston Texas 77040
713 344 1752 PH
fsdesignbuild.com

PROJECT NAME

THE STATE OF TEXAS
FORT BEND COUNTY

INFORMATION TECHNOLGY BUILDING
1419 EUGENE HEIMANN CIRCLE
FORT BEND COUNTY , RICHMOND , TEXAS 77469

CONSULTANTS

PROFESSIONAL SEAL

REGISTERED ARCHITECT
FAKHRUDDIN N. SIBIR
22631
STATE OF TEXAS
5/15/2024

ISSUED FOR
ISSUED FOR PROPOSALS AND PERMIT

REVISIONS

No.	DESCRIPTION	DATE

KEY PLAN

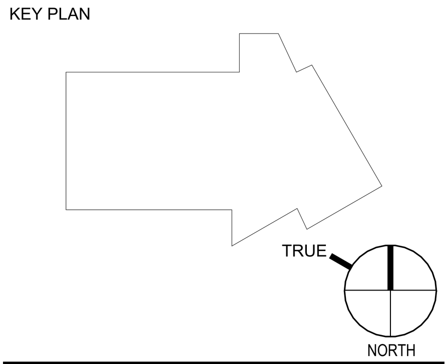

SHEET TITLE
ENLARGED ROOF PLANS

SCALE
1/4" = 1'-0"

DATE
05/15/2024

PROJECT NUMBER
2319

SHEET NUMBER
A151

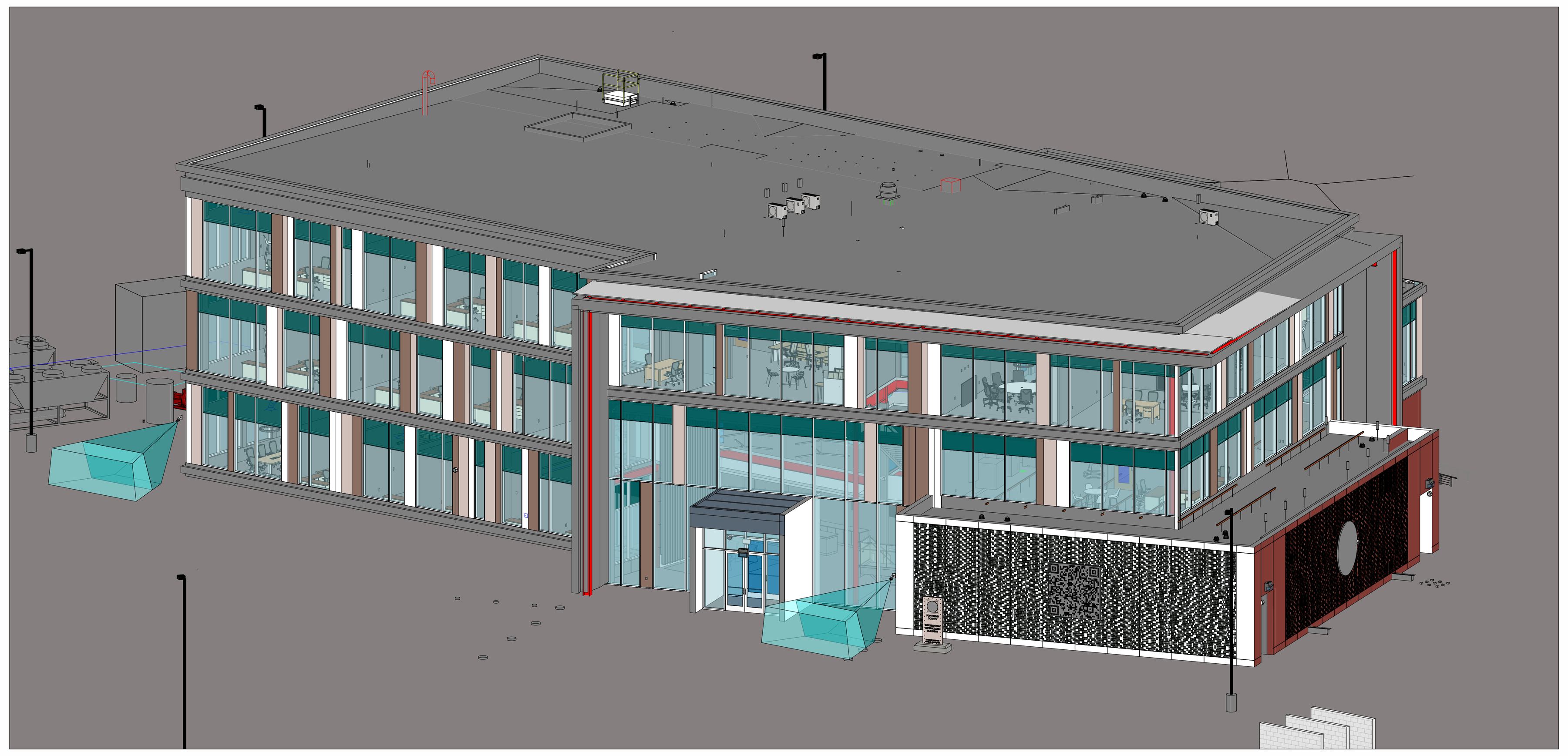

12
A200
PERSPECTIVE - SOUTH EAST
SCALE :

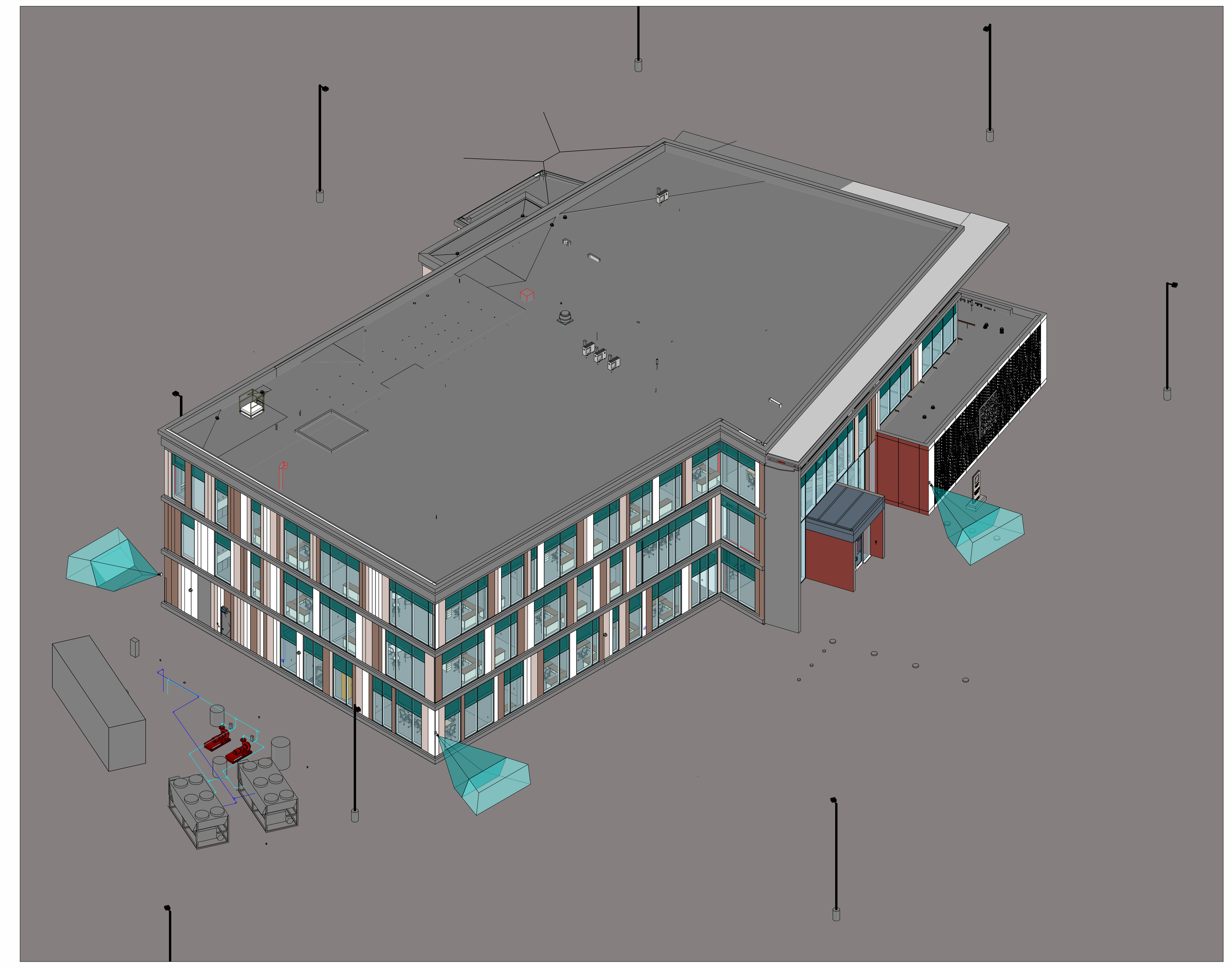

7
A200
PERSPECTIVE - SOUTH WEST
SCALE :

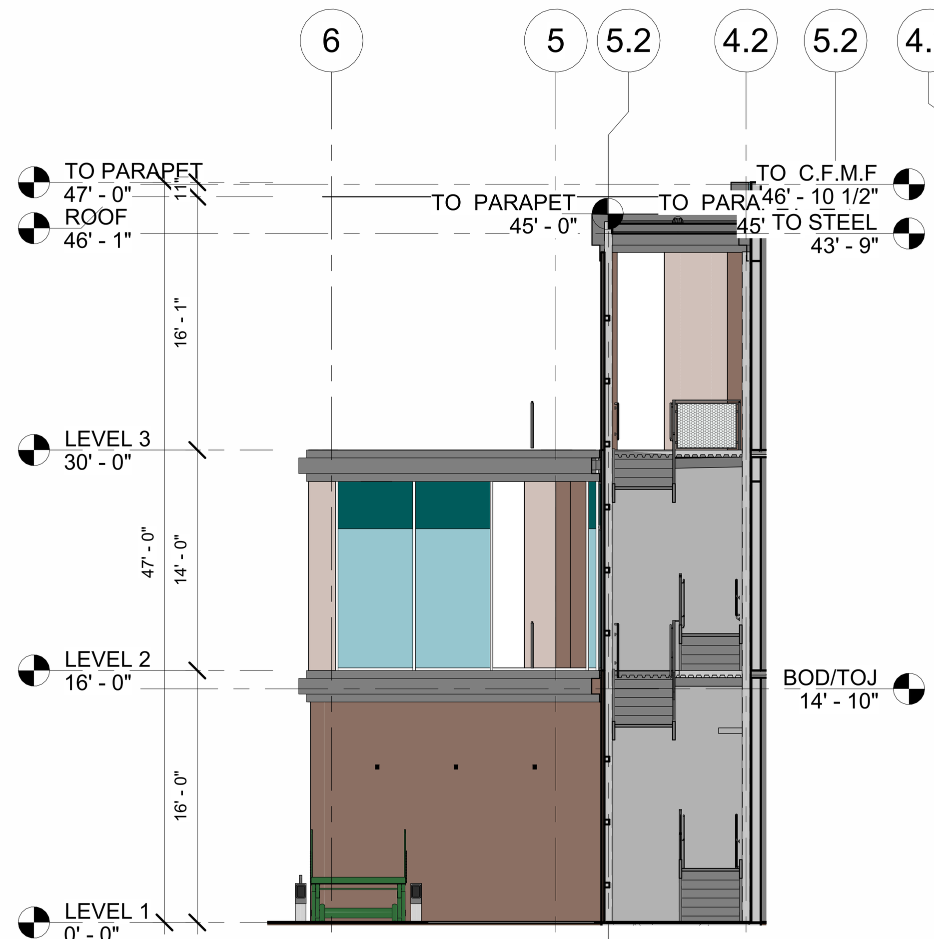

14
A200
EXTERIOR ELEVATION: WEST @ LOADING DOCK
SCALE : 1/8" = 1'-0"

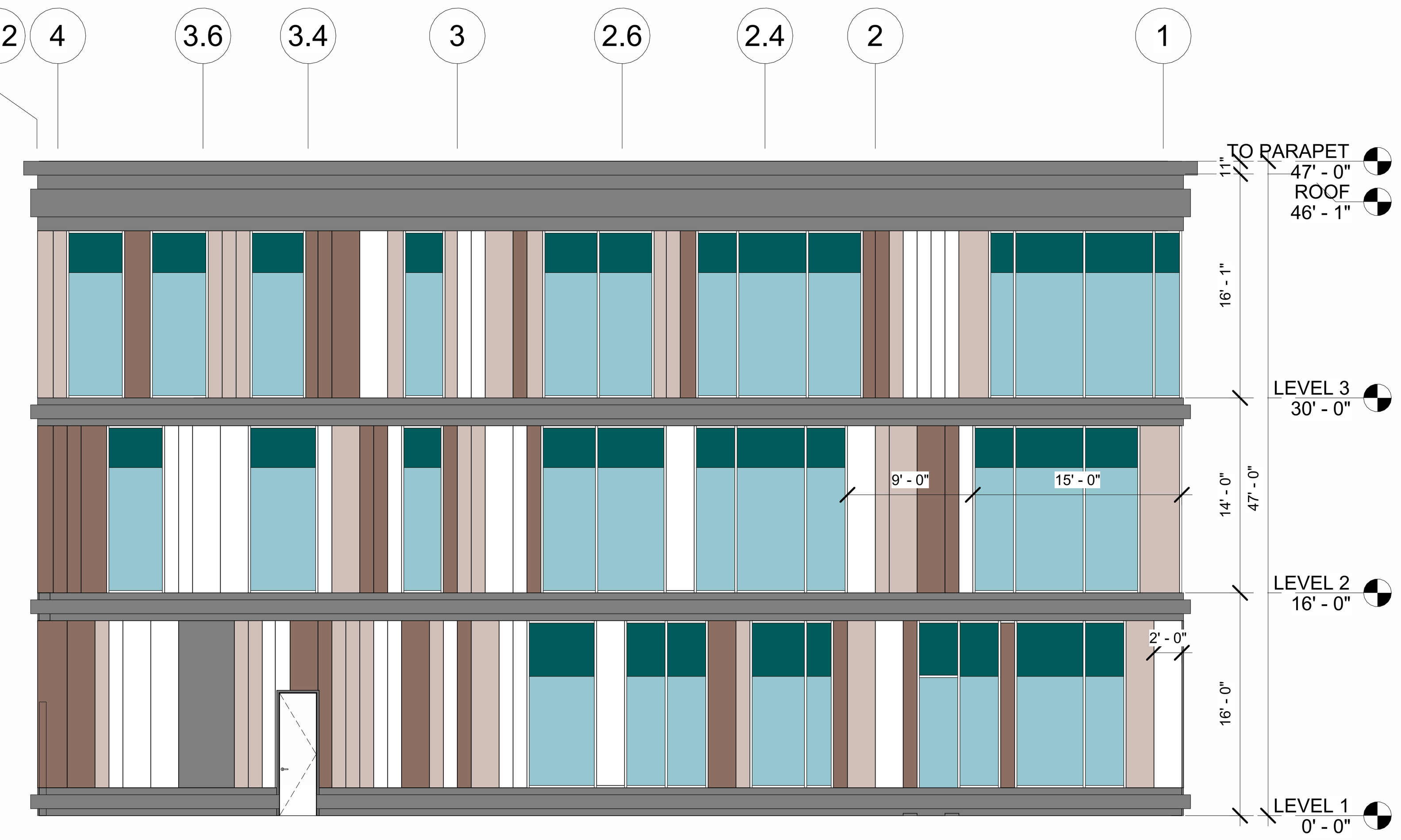

10
A200
EXTERIOR ELEVATION: WEST @ BULLPEN
SCALE : 1/8" = 1'-0"

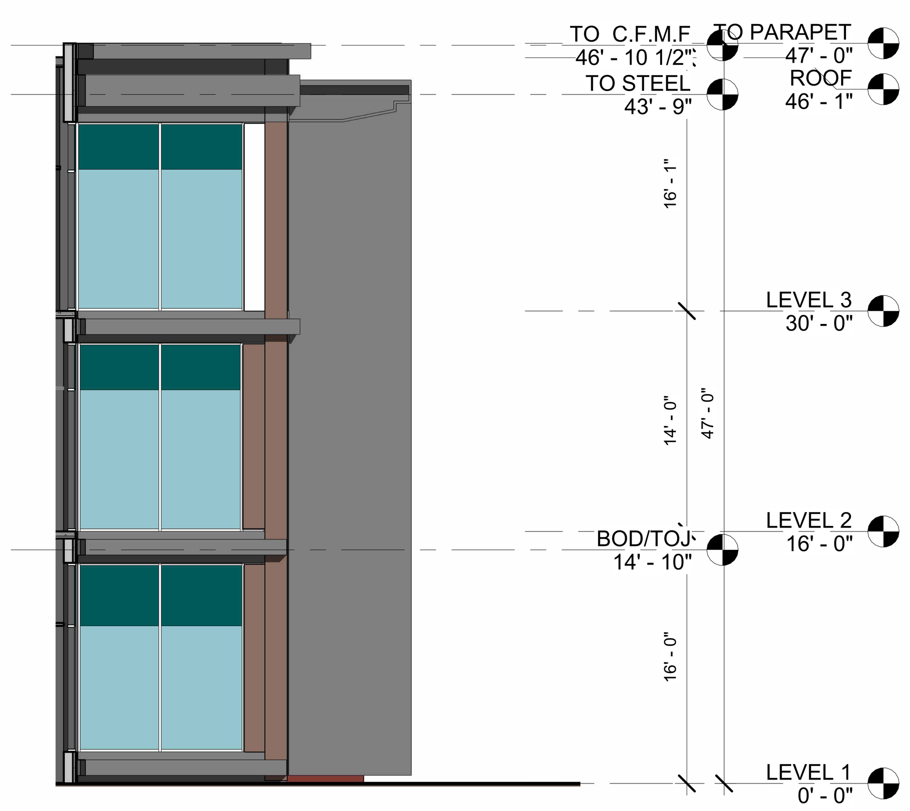

6
A200
EXTERIOR ELEVATION: WEST @ LOBBY
SCALE : 1/8" = 1'-0"

9
A200
EXTERIOR ELEVATION: SOUTH @ BULLPEN
SCALE : 1/8" = 1'-0"

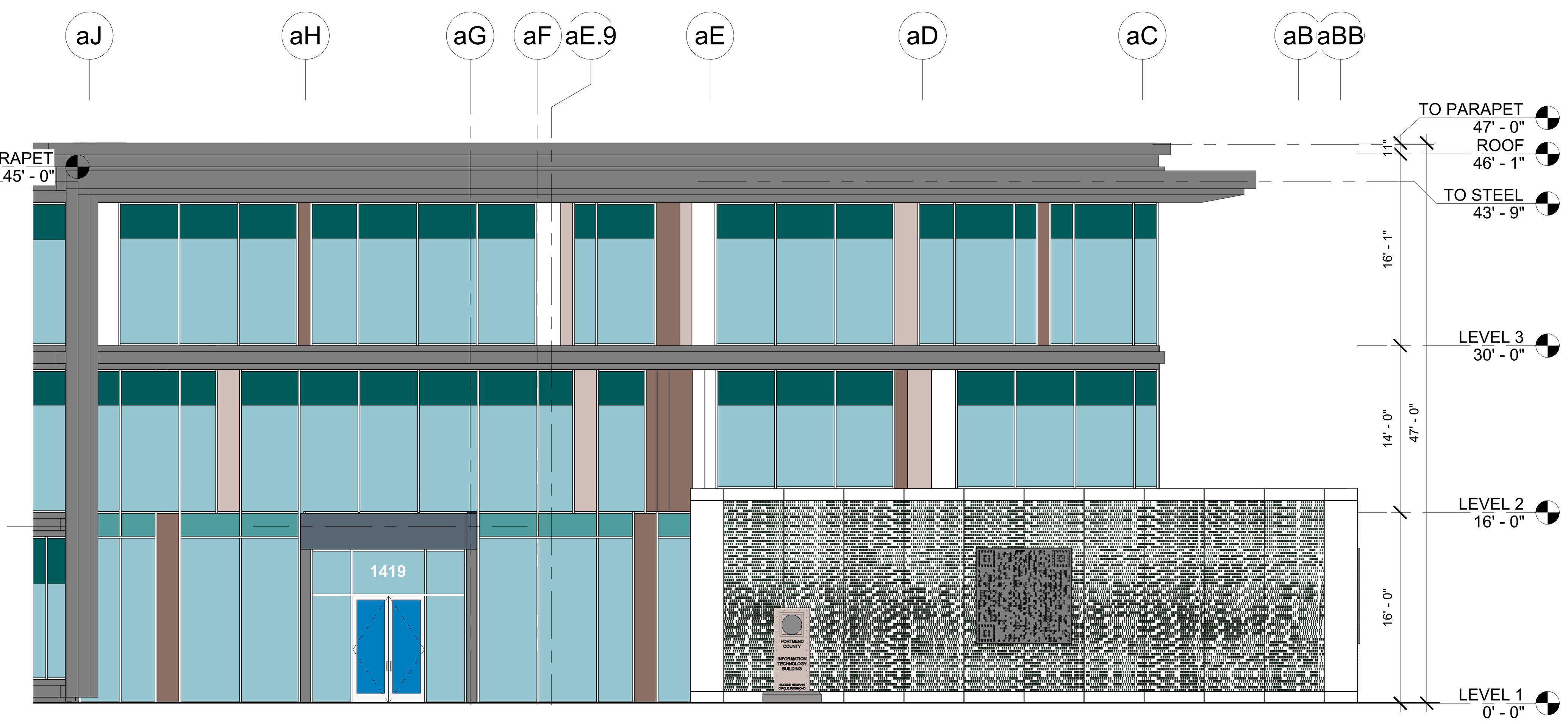

5
A200
EXTERIOR ELEVATION: SOUTH @ LOBBY
SCALE : 1/8" = 1'-0"

FSGROUP®
ARCHITECTS
16575 Village Drive
Houston Texas 77040
713 344 1752 PH
fsdesignbuild.com

PROJECT NAME

INFORMATION TECHNOLOGY BUILDING
1419 EUGENE HEIMANN CIRCLE
FORT BEND COUNTY . RICHMOND . TEXAS 77469

CONSULTANTS

PROFESSIONAL SEAL

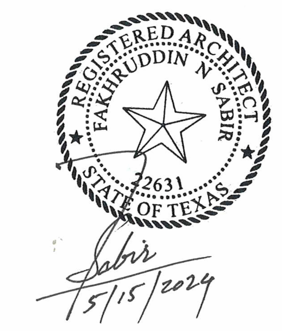

ISSUED FOR
ISSUED FOR PROPOSALS AND PERMIT

REVISIONS

No.	DESCRIPTION	DATE

KEY PLAN

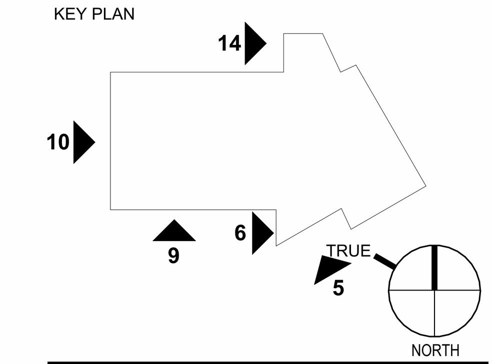

SHEET TITLE
EXTERIOR ELEVATIONS SOUTH & WEST

SCALE 1/8" = 1'-0"
DATE 05/15/2024
PROJECT NUMBER 2319
SHEET NUMBER
A200

FILE PATH: Autodesk Docs://FBC IT Building/FBIT_A23.rvt
PLOT DATE: 5/22/2024 2:14:18 PM

16 A201 PERSPECTIVE - NORTH EAST
SCALE :

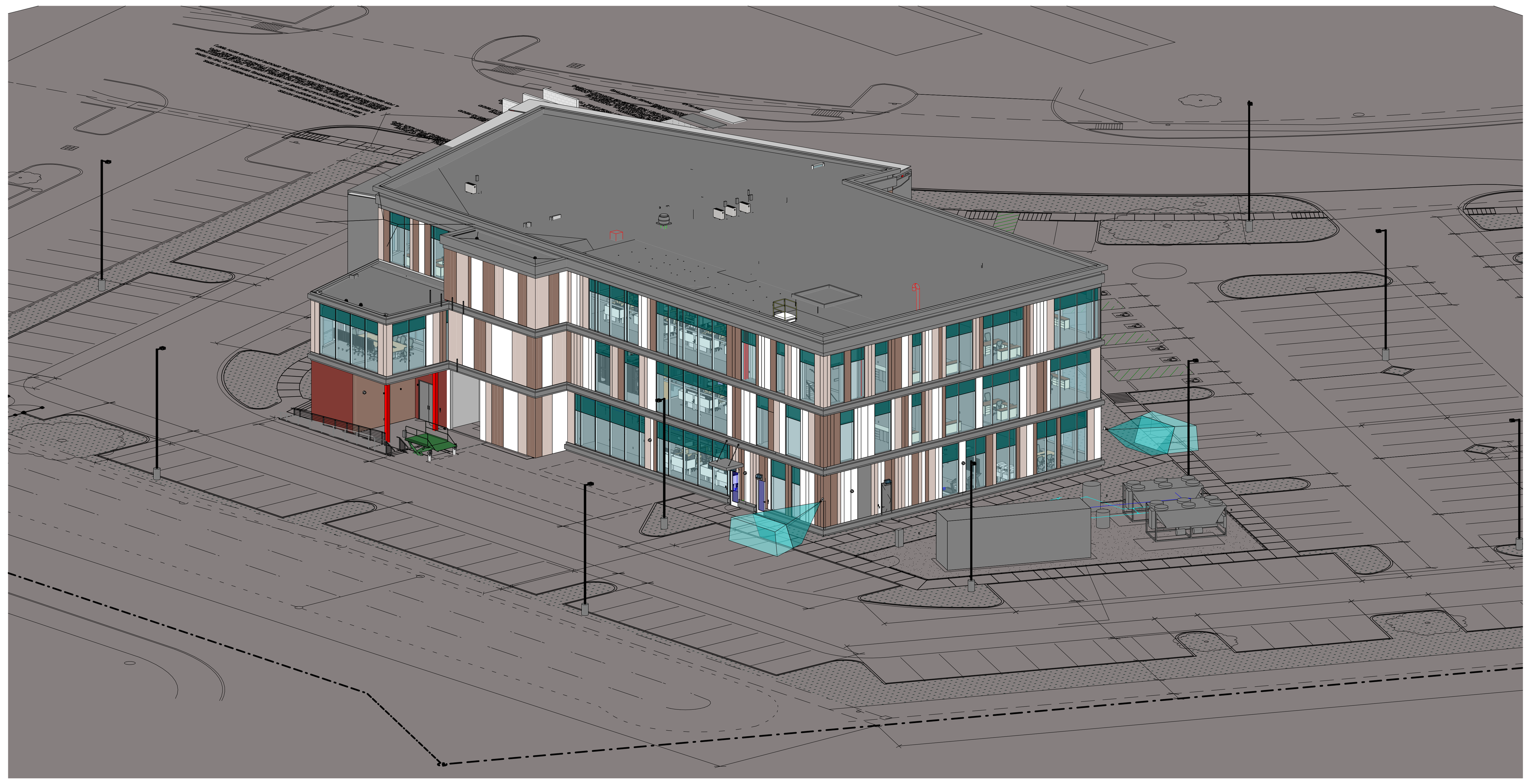

7 A201 PERSPECTIVE - NORTH WEST
SCALE :

6 A201 EXTERIOR ELEVATION: EAST
SCALE : 1/8" = 1'-0"

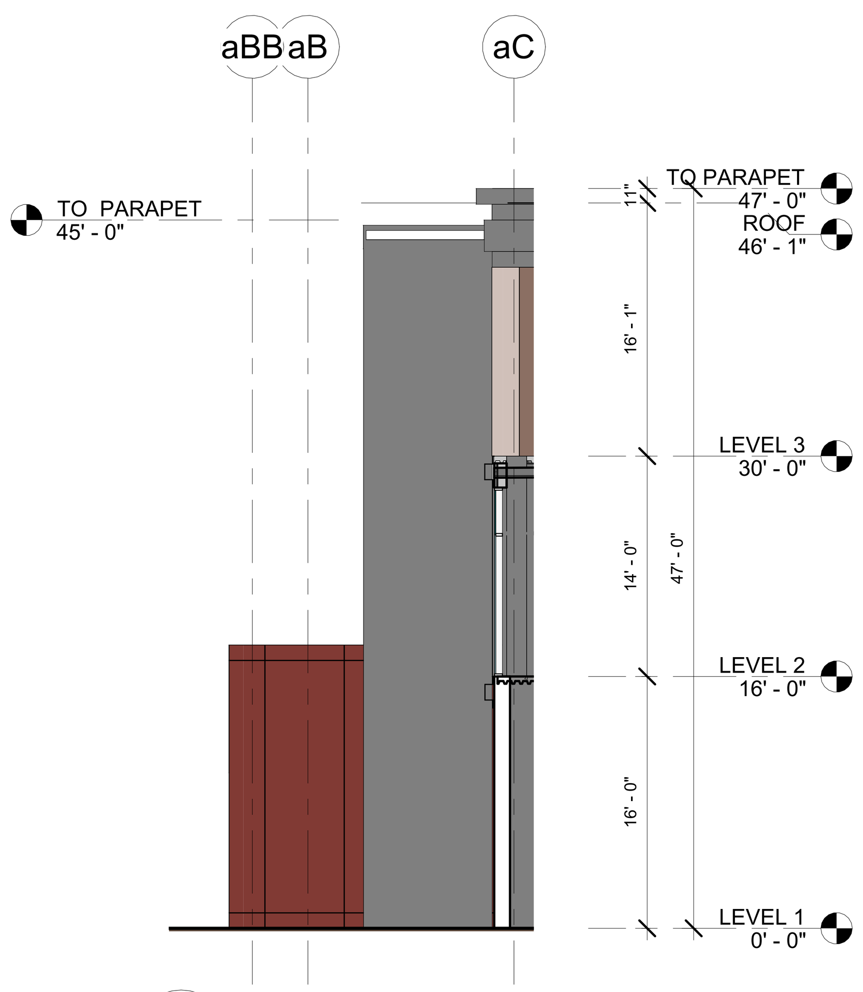

13 A201 EXTERIOR ELEVATION: NORTH
SCALE : 1/8" = 1'-0"

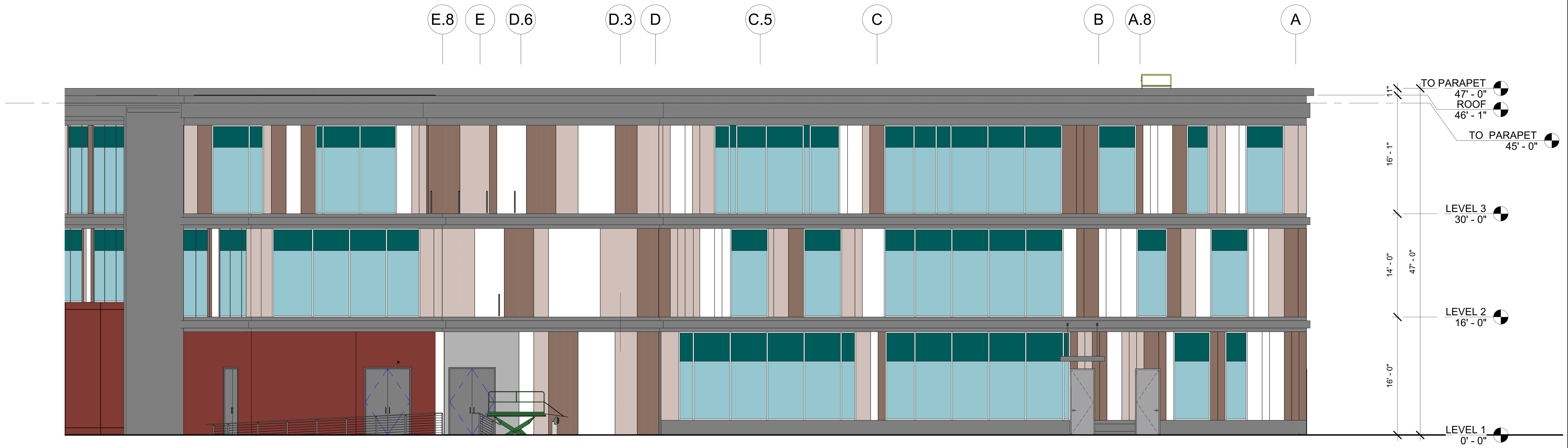

5 A201 EXTERIOR ELEVATION: NORTH
SCALE : 1/8" = 1'-0"

PLOT DATE: 5/22/2024 2:07:52 PM FILE PATH: Autodesk Docs://FBC IT Building/FBIT_A23.rvt

FS GROUP ARCHITECTS
16575 Village Drive
Houston Texas 77040
713 344 1752 PH
fsdesignbuild.com

PROJECT NAME

INFORMATION TECHNOLGY BUILDING
1419 EUGENE HEIMANN CIRCLE
FORT BEND COUNTY . RICHMOND . TEXAS 77469

CONSULTANTS

PROFESSIONAL SEAL

ISSUED FOR
ISSUED FOR PROPOSALS AND PERMIT

REVISIONS

No.	DESCRIPTION	DATE

KEY PLAN

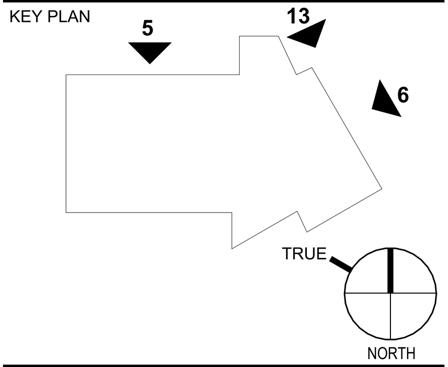

SHEET TITLE
EXTERIOR ELEVATIONS NORTH & EAST

SCALE 1/8" = 1'-0"
DATE 05/15/2024
PROJECT NUMBER 2319
SHEET NUMBER
A201

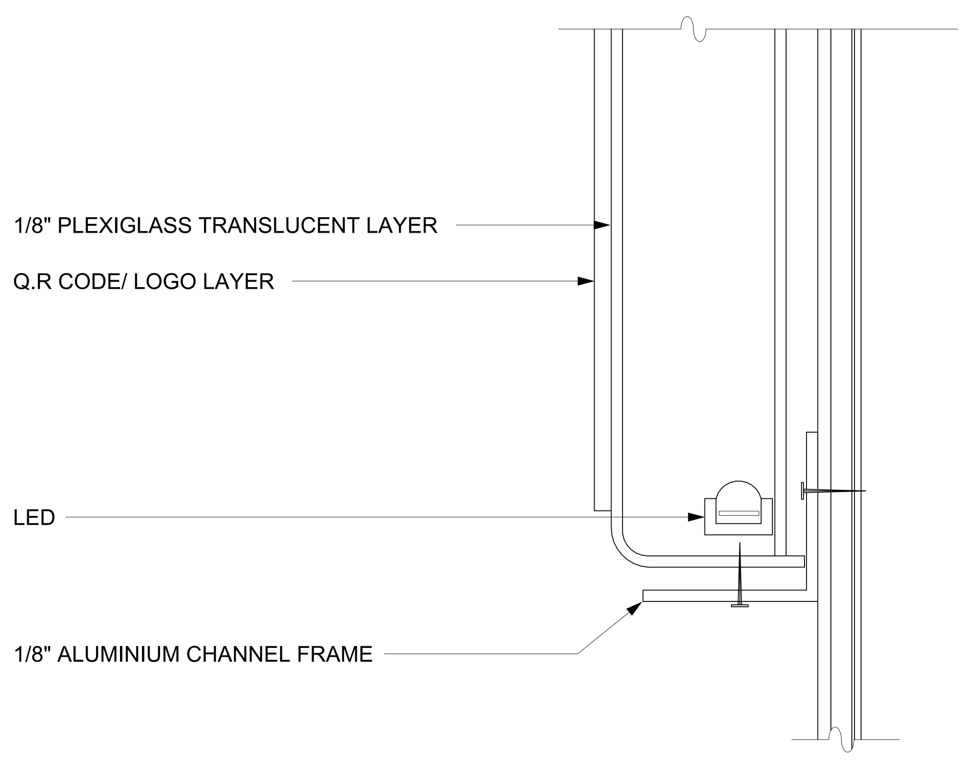

5 A216 DETAIL: SIGNAGE
SCALE : 1" = 1'-0"

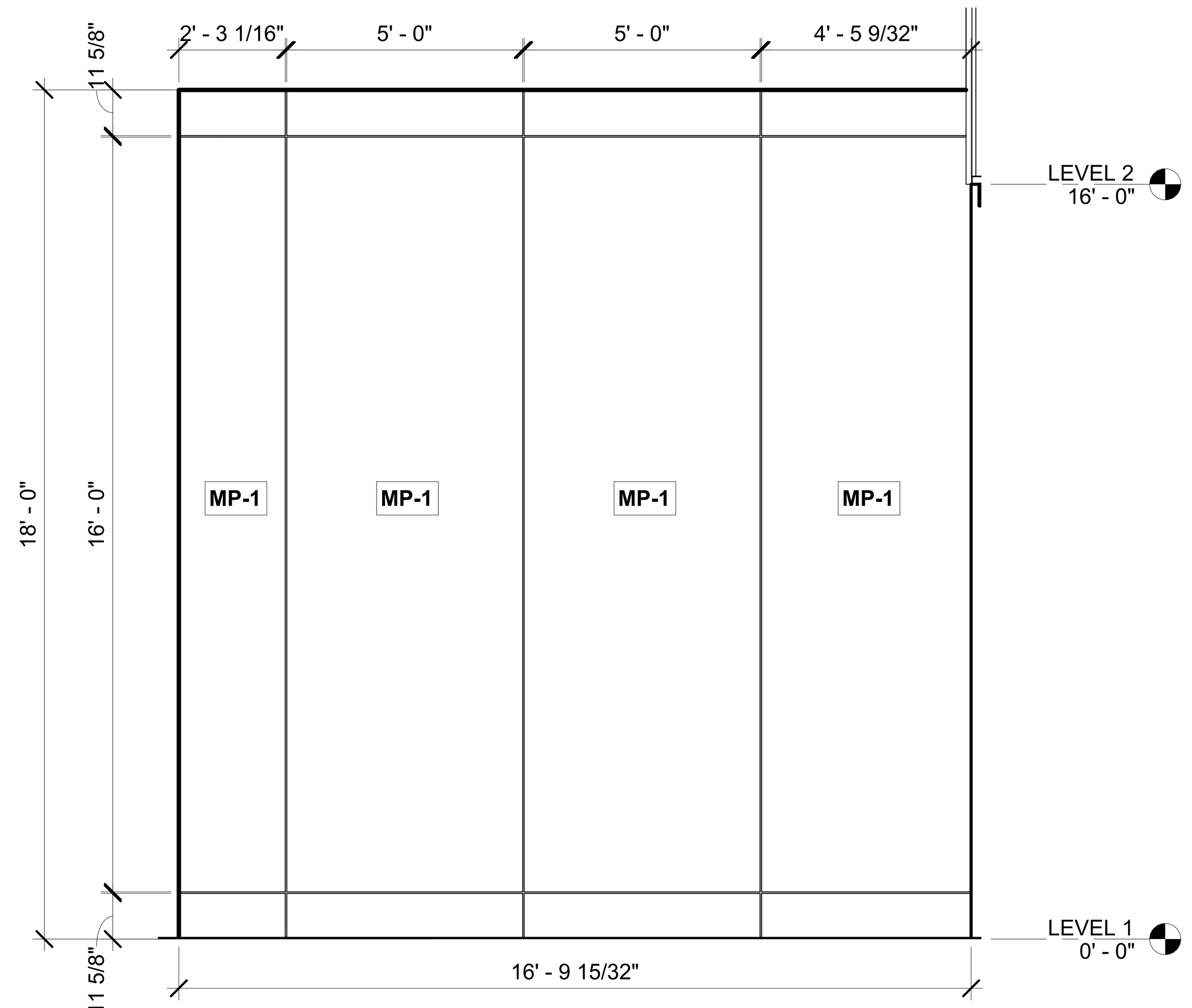

4 A216 ENLG EXTERIOR ELEVATION QR WALL NORTH
SCALE : 3/8" = 1'-0"

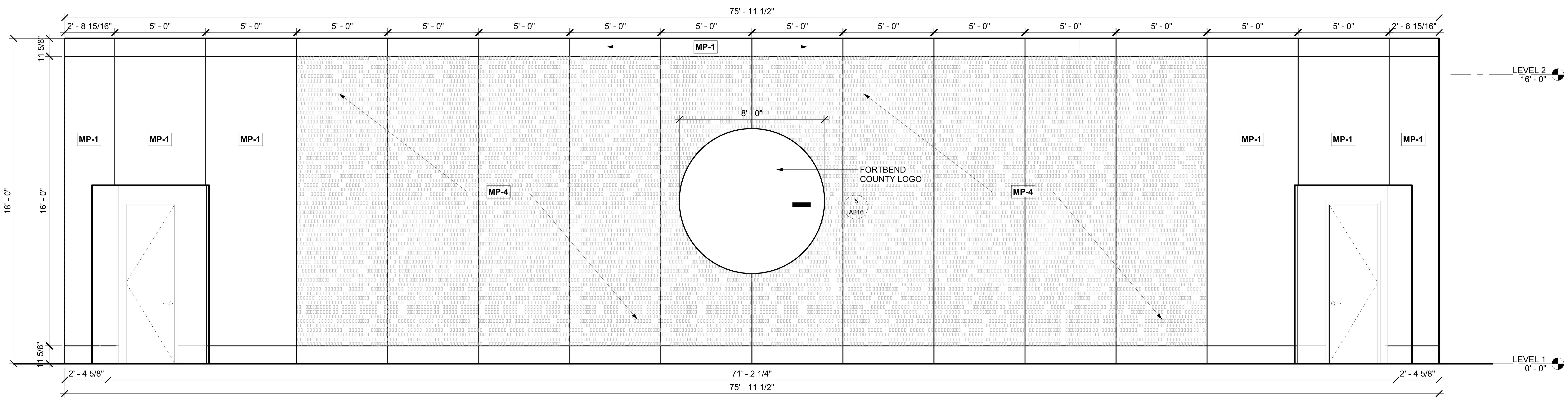

3 A216 ENLG EXTERIOR ELEVATION QR WALL EAST
SCALE : 3/8" = 1'-0"

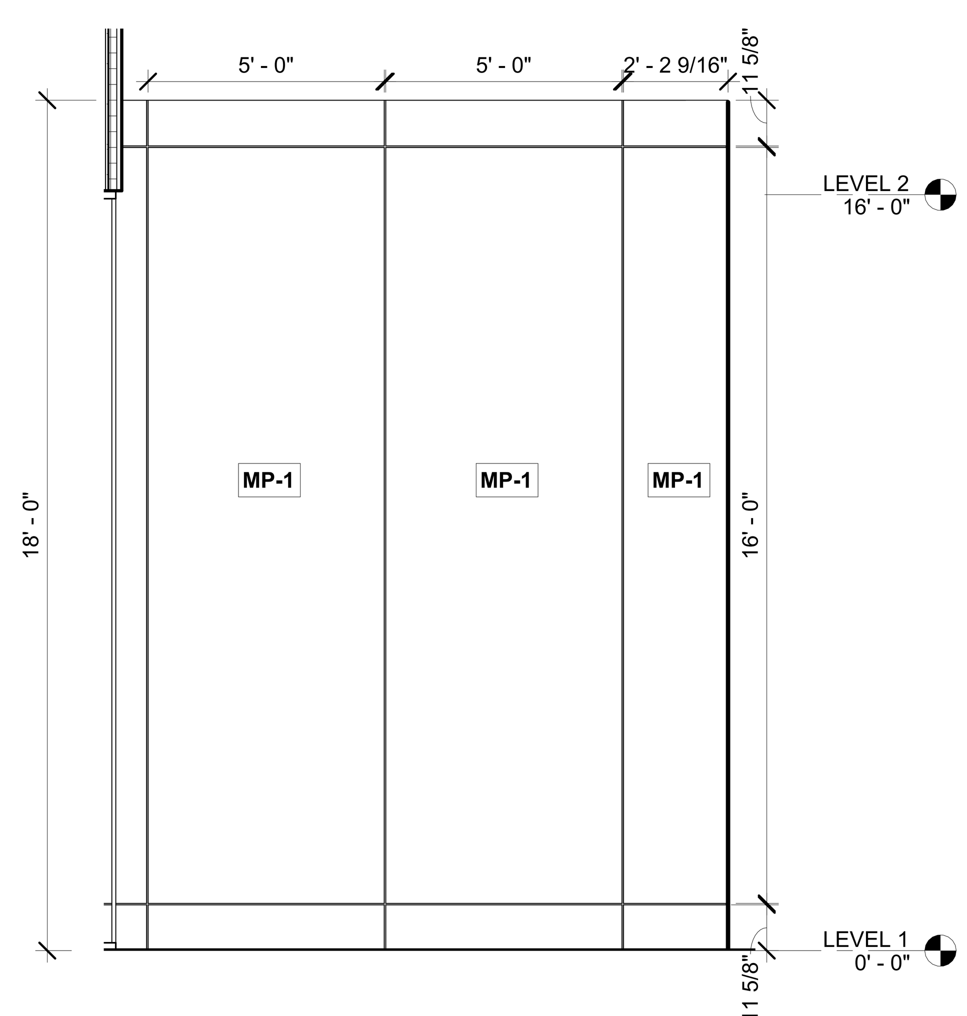

2 A216 ENLG EXTERIOR ELEVATION QR WALL WEST
SCALE : 3/8" = 1'-0"

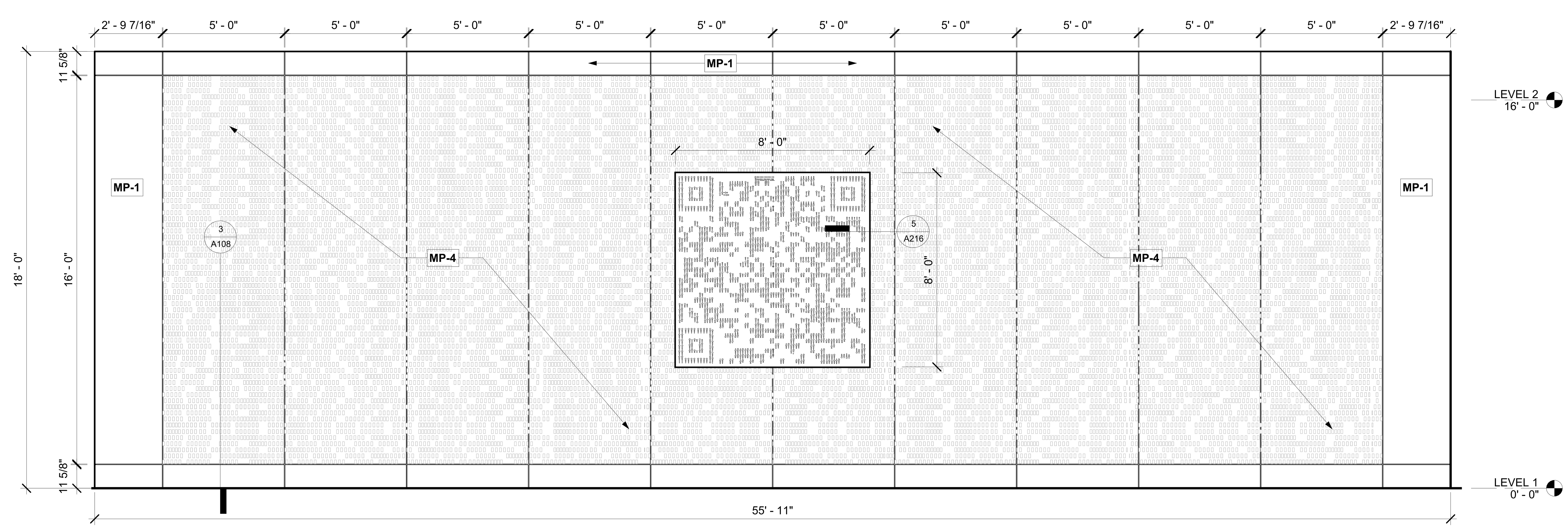

1 A216 ENLG EXTERIOR ELEVATION QR WALL SOUTH
SCALE : 3/8" = 1'-0"

FILE PATH: Autodesk Docs://FBC IT Building/FBIT_A23.rvt
PLOT DATE: 5/21/2024 4:56:44 PM

FSGROUP® ARCHITECTS
16575 Village Drive
Houston Texas 77040
713 344 1752 PH
fsdesignbuild.com

PROJECT NAME

THE STATE OF TEXAS FORT BEND COUNTY

INFORMATION TECHNOLGY BUILDING
1419 EUGENE HEIMANN CIRCLE
FORT BEND COUNTY , RICHMOND , TEXAS 77469

CONSULTANTS

PROFESSIONAL SEAL

REGISTERED ARCHITECT FAKHRUDDIN N. SABIR 22631 STATE OF TEXAS
5/15/2024

ISSUED FOR
ISSUED FOR PROPOSALS AND PERMIT

REVISIONS

No.	DESCRIPTION	DATE

KEY PLAN

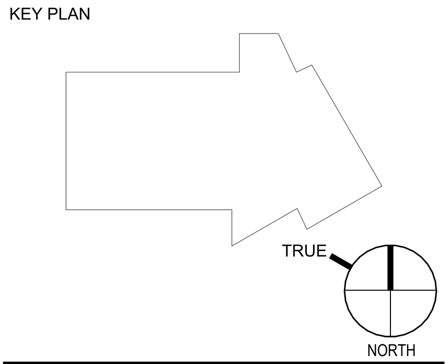

SHEET TITLE
EXT ELEVATIONS ENLG FEATURE WALL

SCALE: As indicated
DATE: 05/15/2024
PROJECT NUMBER: 2319
SHEET NUMBER
A216

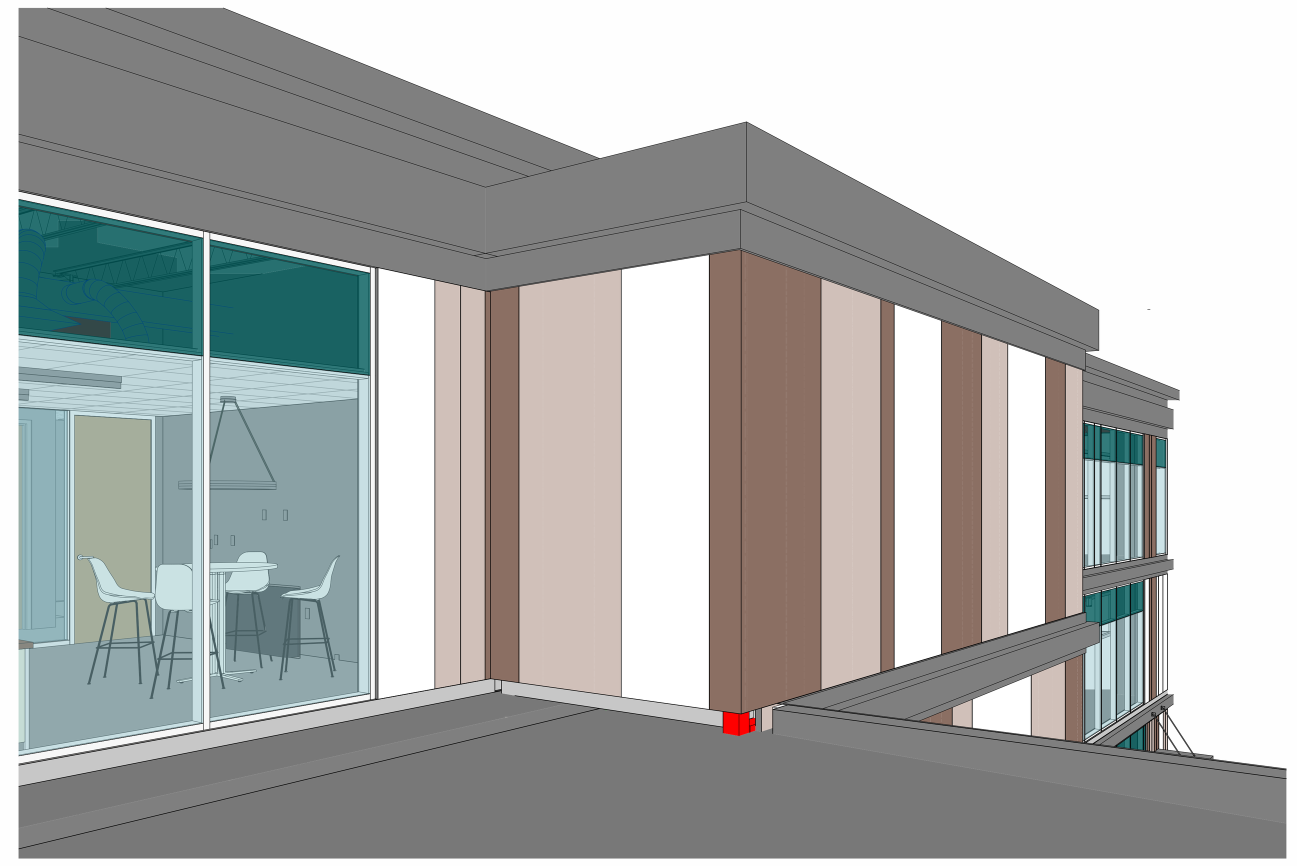

4
A217
STAIR 3 BALCONY PERSPECTIVE VIEW
SCALE :

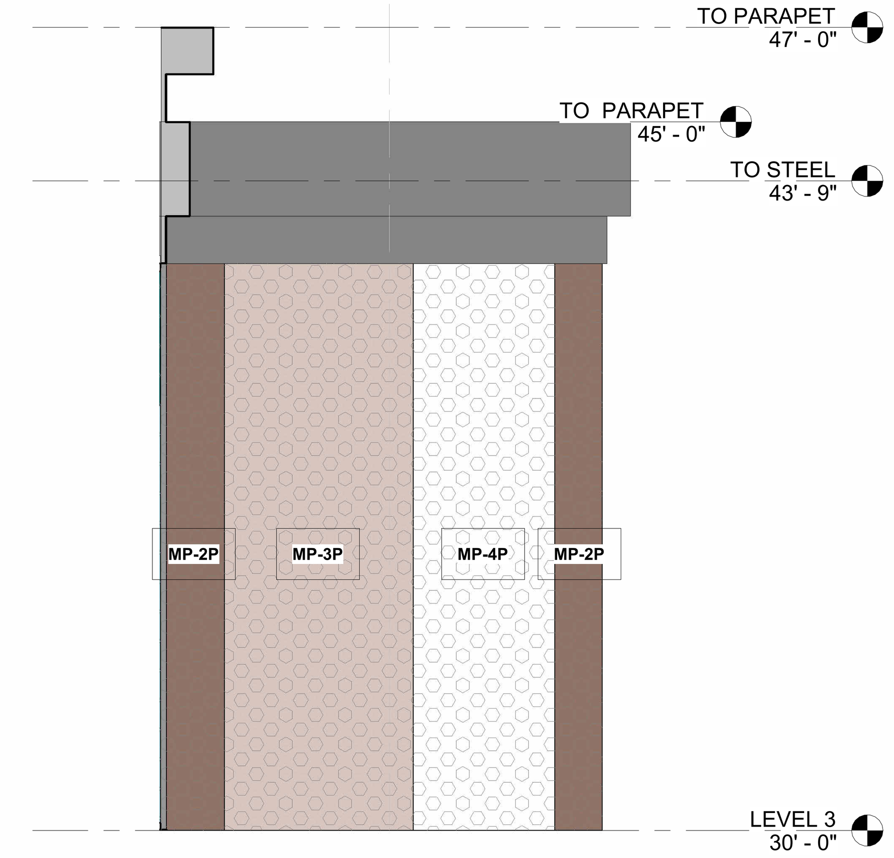

2
A217
ENLG EXTERIOR ELEVATION STAIR-3 EAST WALL
SCALE : 3/8" = 1'-0"

5
A217
STAIR 3 GROUND PERSPECTIVE VIEW
SCALE :

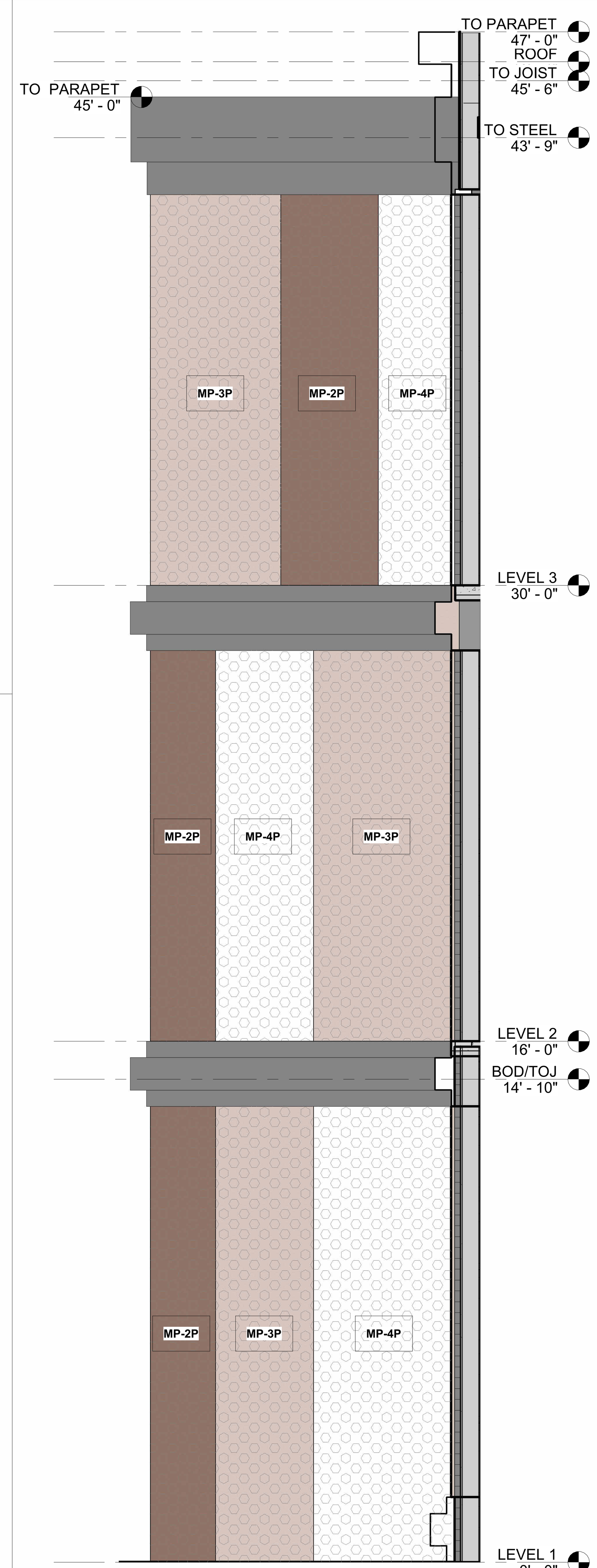

3
A217
ENLG EXT ELEVATION STAIR 3-WEST WALL
SCALE : 3/8" = 1'-0"

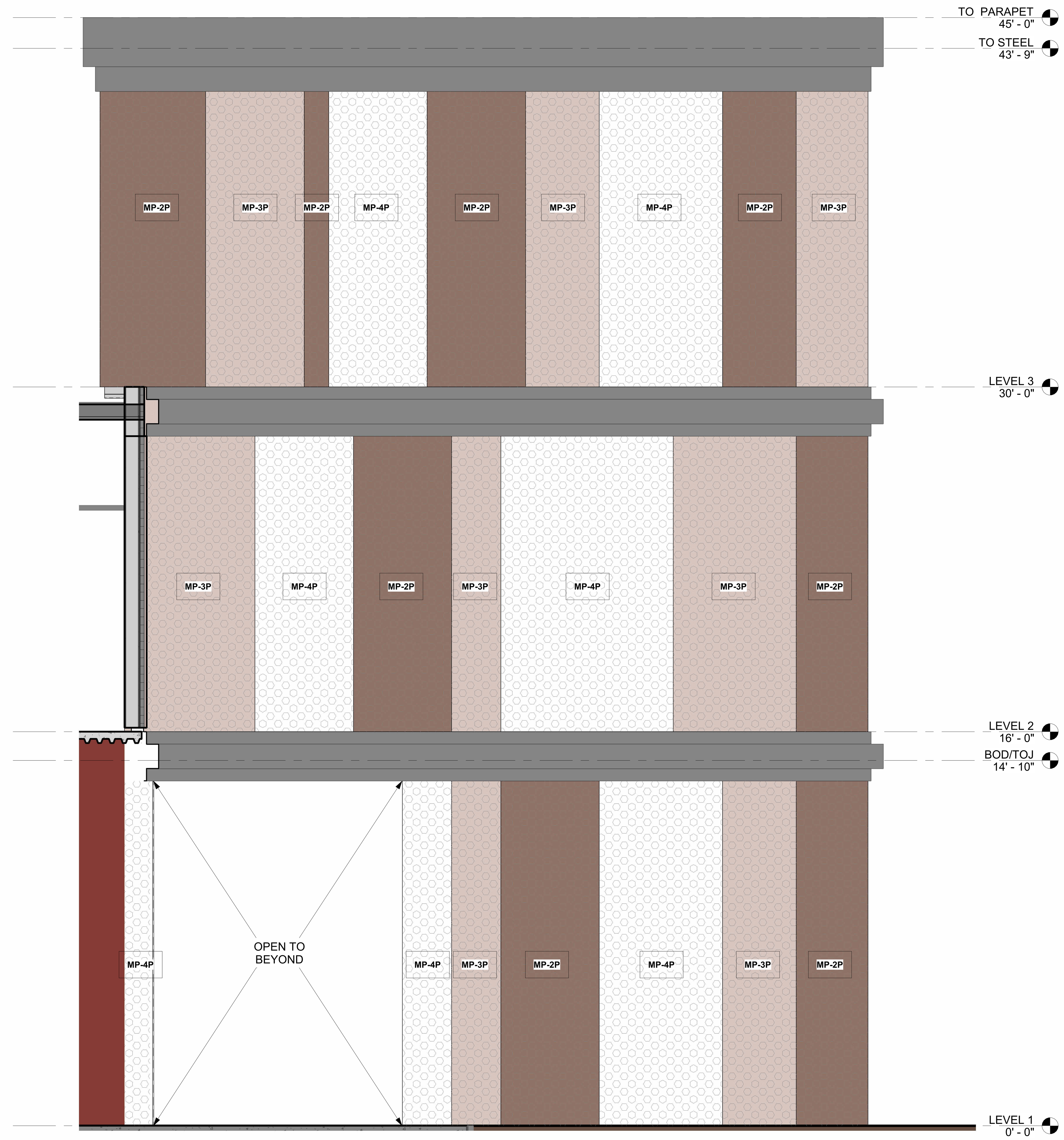

1
A217
ENLG EXTERIOR ELEVATION STAIR 3-NORTH WALL
SCALE : 3/8" = 1'-0"

PLOT DATE: 5/22/2024 5:16:43 PM
FILE PATH: Autodesk Docs://FBC IT Building/FBIT_A23.rvt

FSGROUP® ARCHITECTS
16575 Village Drive
Houston Texas 77040
713 344 1752 PH
fsdesignbuild.com

PROJECT NAME

THE STATE OF TEXAS
FORT BEND COUNTY

INFORMATION TECHNOLGY BUILDING
1419 EUGENE HEIMANN CIRCLE
FORT BEND COUNTY . RICHMOND . TEXAS 77469

CONSULTANTS

PROFESSIONAL SEAL

REGISTERED ARCHITECT
FAKHRUDDIN N. SABIR
22631
STATE OF TEXAS
5/15/2024

ISSUED FOR
ISSUED FOR PROPOSALS AND PERMIT

REVISIONS

No.	DESCRIPTION	DATE

KEY PLAN

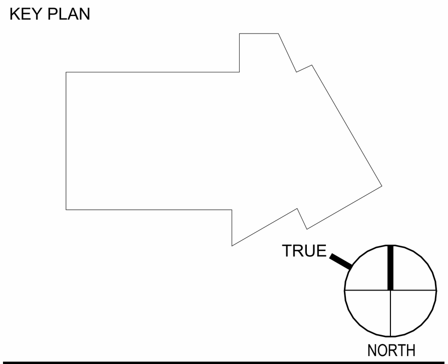

SHEET TITLE
EXTERIOR ELEVATIONS STAIR - 3 WALLS

SCALE
3/8" = 1'-0"

DATE
05/15/2024

PROJECT NUMBER
2319

SHEET NUMBER
A217

5 A300 BUILDING SECTION WEST-EAST v NORTH TRAINING ROOM

SCALE : 1/8" = 1'-0"

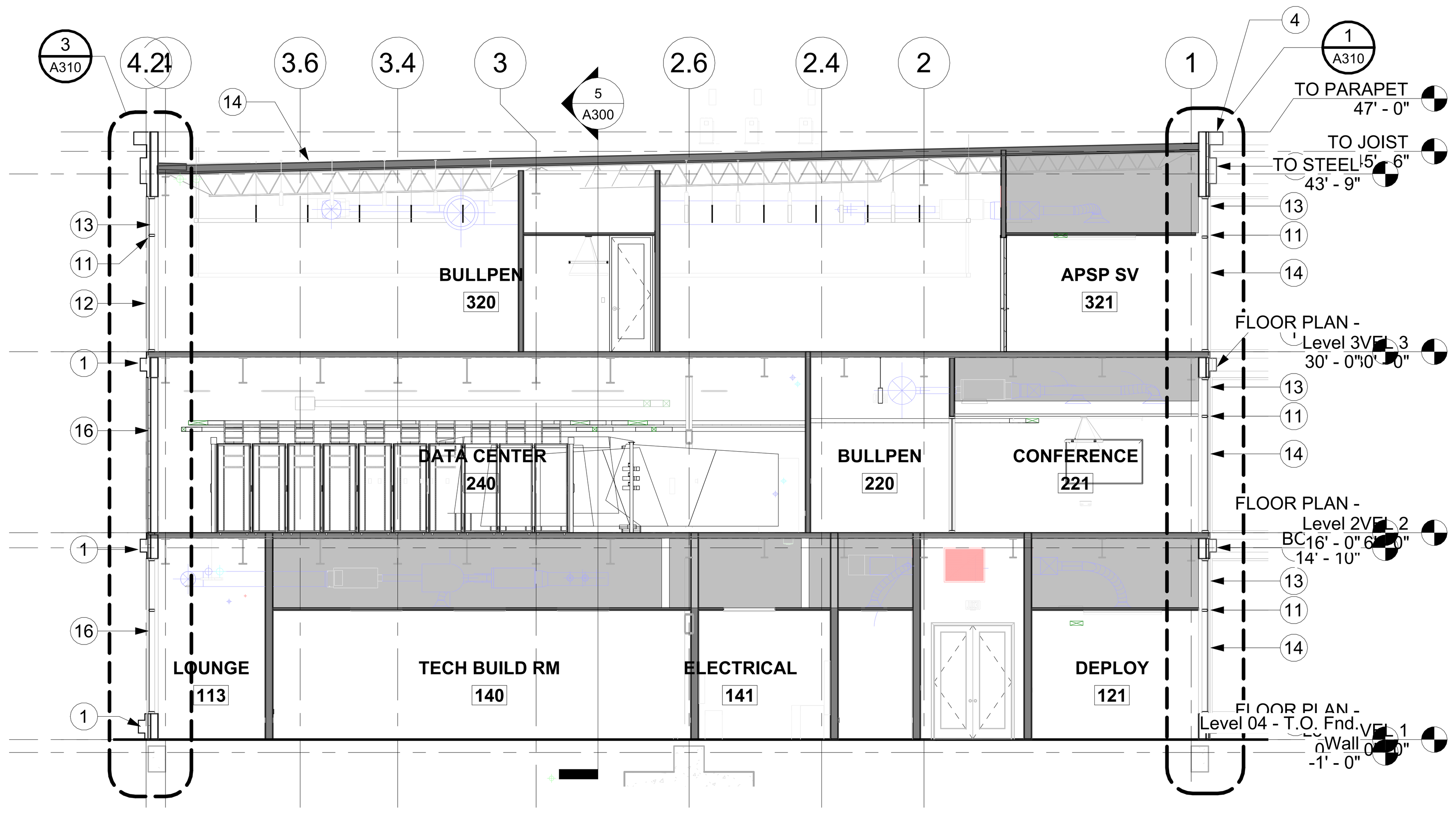

2 A300 BUILDING SECTION NORTH-SOUTH v EAST DATA CENTER

SCALE : 1/8" = 1'-0"

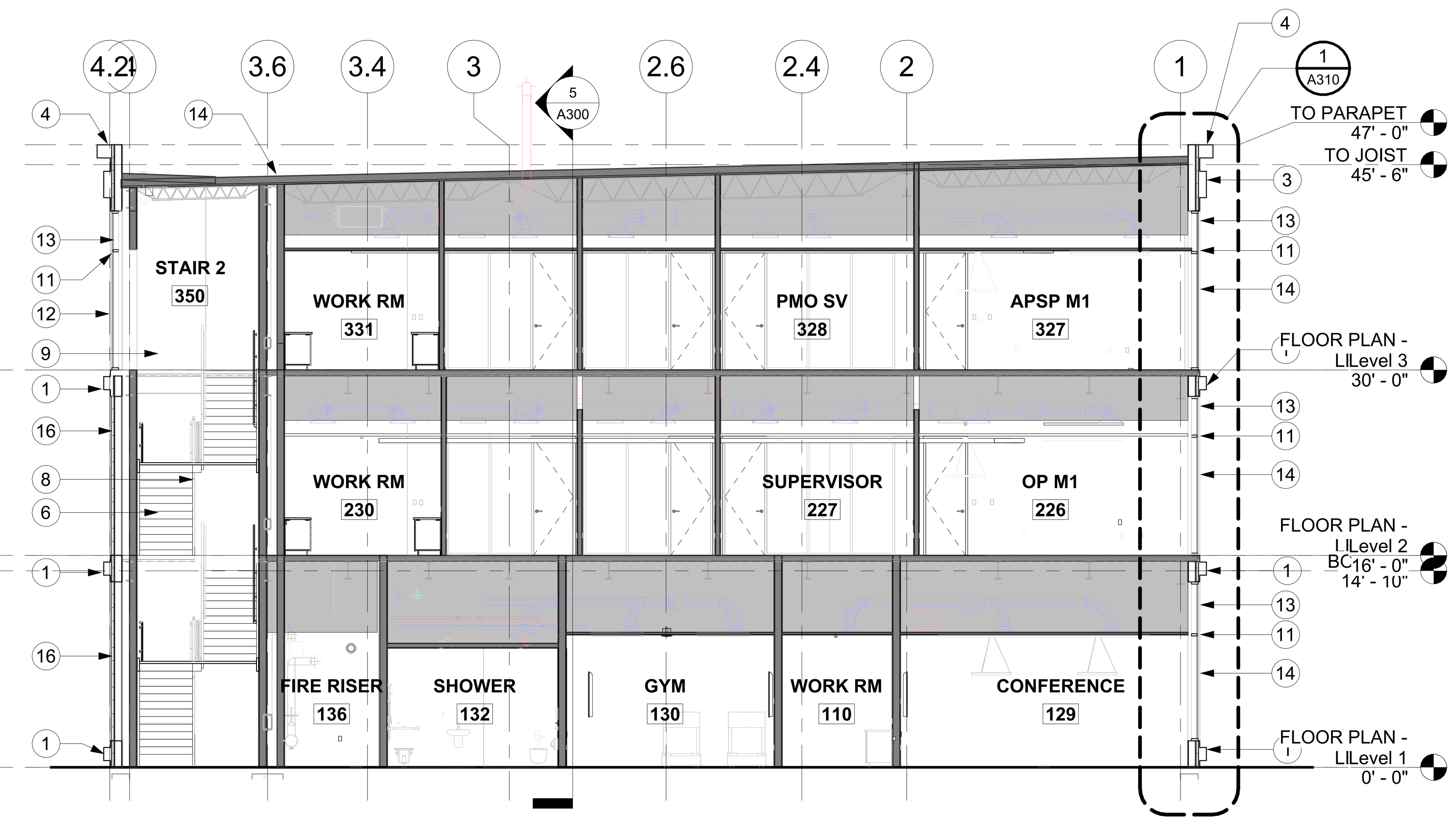

1 A300 BUILDING SECTION NORTH-SOUTH v EAST OFFICES

SCALE : 1/8" = 1'-0"

KEY NOTES

1 METAL PANEL BAND.
2 EYEBROW CANOPY.
3 METAL BAND AT PARAPET.
4 METAL PANEL COPING.
5 PERFORATED METAL PANEL.
6 CONCRETE FILLED METAL PAN STAIRS.
7 HDG RAILING.
8 PAINTED STEEL HANDRAIL.
9 PERFORATED STAINLESS STEEL GUARDRAIL INFILL PANEL.
10 GLASS GUARDRAIL SYSTEM.
11 ALUMINUM CURTAINWALL SYSTEM.
12 INSULATED VISION GLAZING.
13 INSULATED SPANDREL GLAZING.
14 TPO MEMBRANE ROOFING
15 ELEVATOR SHAFT WITH FIRE-RATED ENCLOSURE.
16 METAL PANEL WALL SYSTEM.
17 FEATURE METAL PANEL WALL.
18 THERMAL FIBERGLASS INSULATION.
19 MINERAL WOOL INSULATION.
20 5/8" GYPSUM BOARD SHEATHING.
21 5/8" GYPSUM BOARD.
22 FLUID APPLIED AIR AND WATER RESISTIVE BARRIER.
23 6" METAL STUDS.
24 CONCRETE SLAB ON METAL DECK. RE STRUCTURE.
25 STEEL COLUMN
26 STEEL BEAM
27 CONCRETE FOUNDATION AND SLAB
28 CEILING
29 STEEL ROOF JOIST
30 SUBFRAME TO SUPPORT METAL PANEL SYSTEM.
31 PRESSURE TREATED WOOD BLOCKING.
32 STUD TRACK.
33 EYEBROW CANOPY LIGHT.
34 ROOF COVER SHEATHING.
35 CONTINOUS HORIZONTAL WALL SUPPORT. RE : STRUCTURE.
36 CURTAINWALL SYSTEM
37 Z GIRTS
38 STEEL POST
39 PLYWOOD SHEATHING
40 BACKER ROD AND SEALANT
41 ALUMINUM FLASHING
42 FLASHING MEMBRANE
43 C.F.M.F. BOX BEAM HEADER
44 BENT PLATE AT SLAB EDGE
45 STEEL ANGLE
46 TAPERED INSULATION.
47 SPRAY FOAM INSULATION
48 METAL ROOF PANEL
49 ROOF INSULATION
50 TAPERED ROOF INSULATION
51 2" METAL STUDS
52 EDGE BEAD
53 4" DEEP PERFORATED METAL PANEL SYSTEM
54 TRANSLUCENT ACRYLIC PANEL 1/4" FROSTED WHITE
55 LED FIXTURE
56 2" RIGID INSULATION ON FLUID APPLIED AIR AND WATER RESISTIVE BARRIER ON 5/8" SHEATHING ON 6" COLD FORMED METAL FRAME @ 16" O.C. WITH BATT INSULATION
57 WATERPROOF MEMBRANE ON 3/4" P.T. PLYWOOD ON 'Z' GIRTS ON 2" RIGID INSULATION ON FLUID APPLIED AIR AND WATER RESISTIVE BARRIER ON 5/8" SHEATHING ON 6" COLD FORMED METAL FRAMING @ 16" O.C.
58 WOOD SLATS
59 ALUMINUM COMPOSITE PANEL
60 AIR AND WATER RESISTIVE BARRIER ON 5/8" GYPSUM SHEATHING
61 C.F.M.F. WALL SYSTEM

FSGROUP® ARCHITECTS
16575 Village Drive
Houston Texas 77040
713 344 1752 PH
fsdesignbuild.com

PROJECT NAME

INFORMATION TECHNOLGY BUILDING
1419 EUGENE HEIMANN CIRCLE
FORT BEND COUNTY . RICHMOND . TEXAS 77469

CONSULTANTS

PROFESSIONAL SEAL

REGISTERED ARCHITECT FAKHRUDDIN N. SABIR 22631 STATE OF TEXAS
5/15/2024

ISSUED FOR

ISSUED FOR PROPOSALS AND PERMIT

REVISIONS

No.	DESCRIPTION	DATE

KEY PLAN

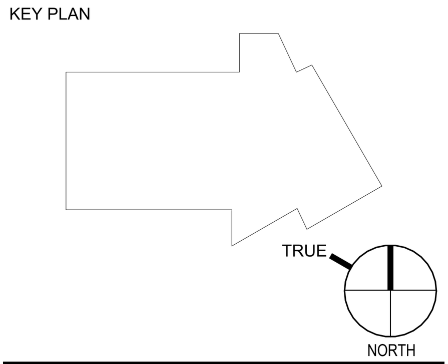

SHEET TITLE

BUILDING SECTIONS

SCALE 1/8" = 1'-0"

DATE 05/15/2024

PROJECT NUMBER 2319

SHEET NUMBER

A300

FILE PATH: Autodesk Docs://FBC IT Building/FBIT_A23.rvt

PLOT DATE: 5/21/2024 4:59:58 PM

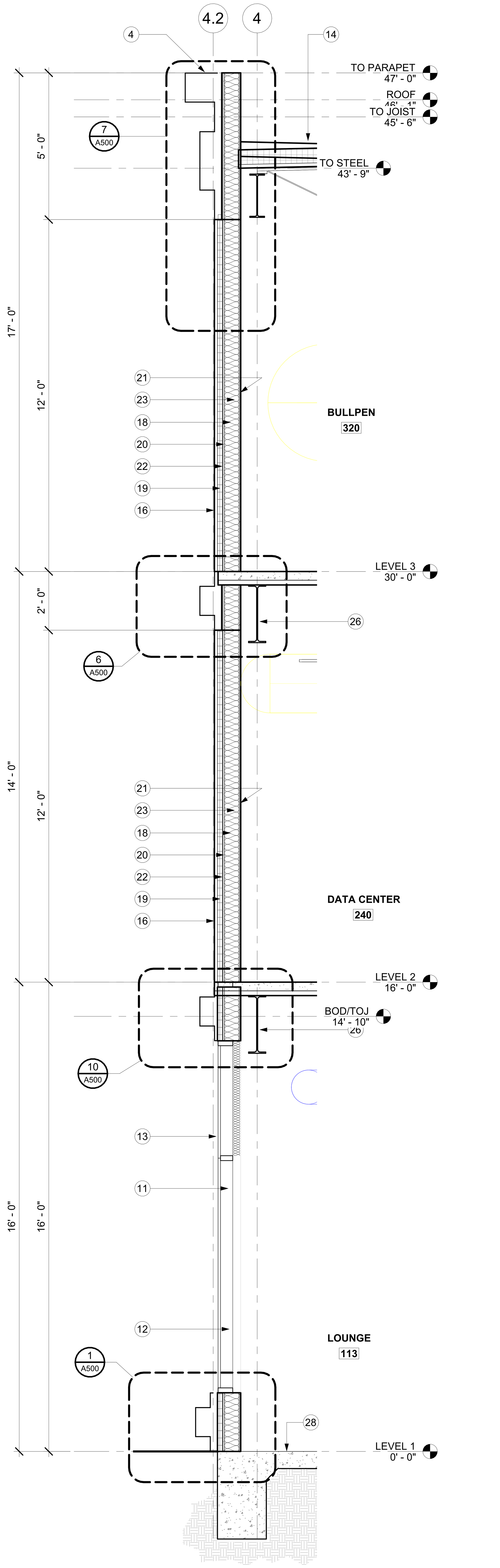

3 A310 WALL SECTION @ LOUNGE
SCALE : 1/2" = 1'-0"

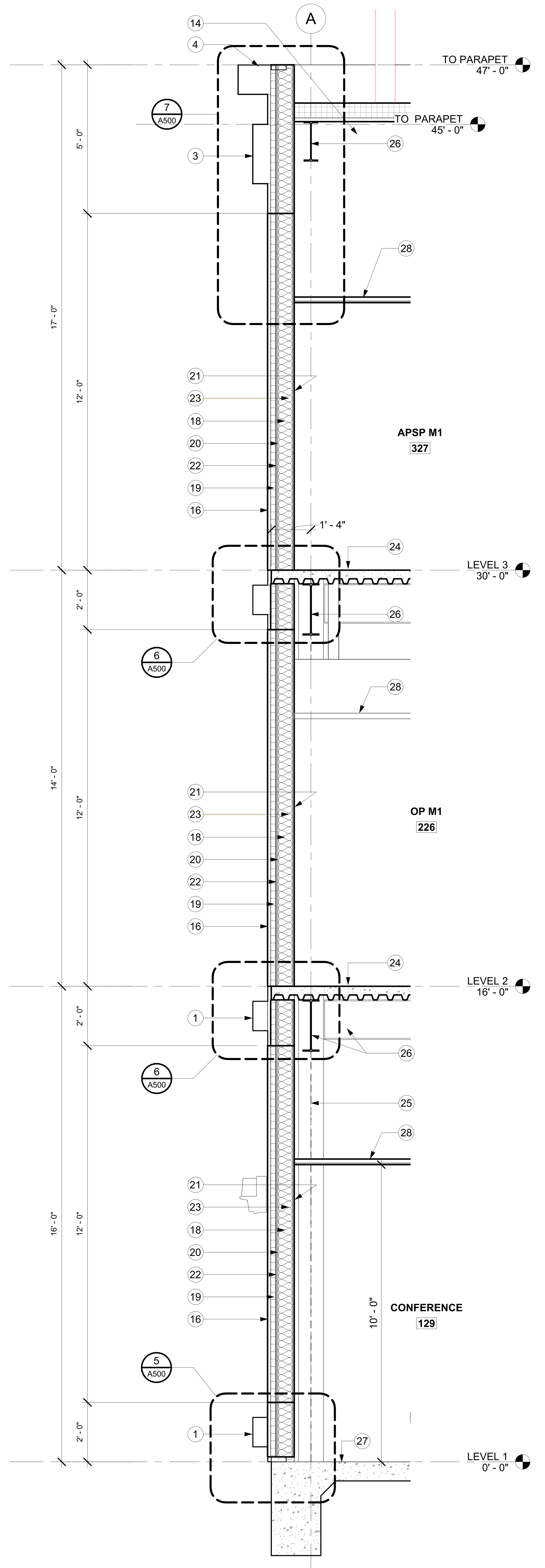

2 A310 WALL SECTION @ MTL PANEL - TYP
SCALE : 1/2" = 1'-0"

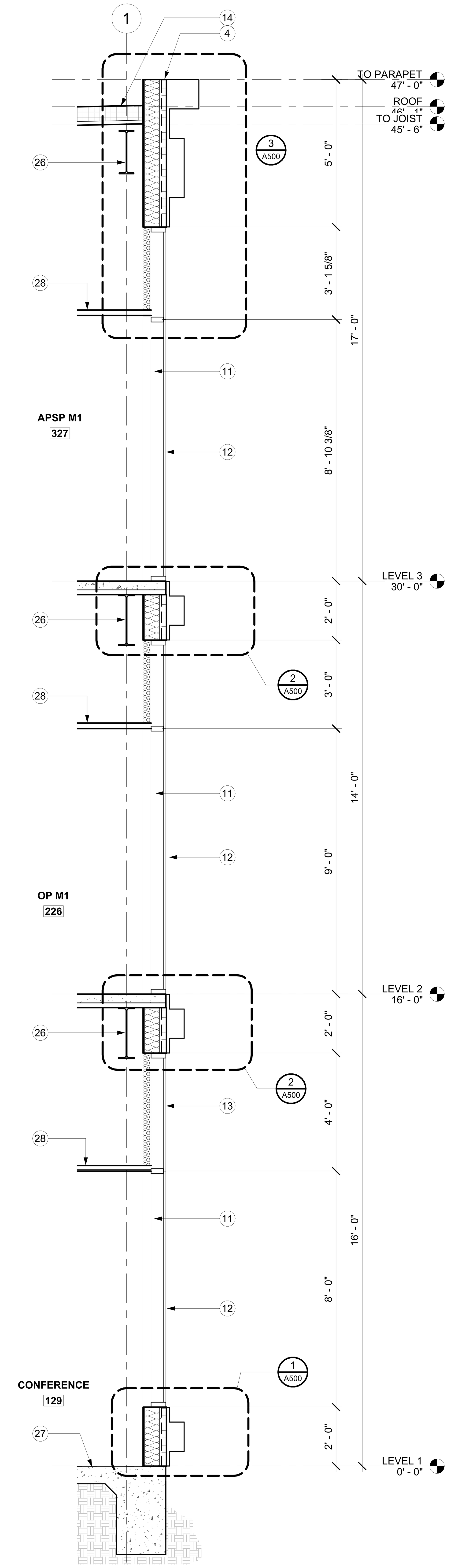

1 A310 WALL SECTION @ CONF. RM. 129
SCALE : 1/2" = 1'-0"

KEY NOTES

1. METAL PANEL BAND.
2. EYEBROW CANOPY.
3. METAL BAND AT PARAPET.
4. METAL PANEL COPING.
5. PERFORATED METAL PANEL.
6. CONCRETE FILLED METAL PAN STAIRS.
7. HDG RAILING.
8. PAINTED STEEL HANDRAIL.
9. PERFORATED STAINLESS STEEL GUARDRAIL INFILL PANEL.
10. GLASS GUARDRAIL SYSTEM.
11. ALUMINUM CURTAINWALL SYSTEM.
12. INSULATED VISION GLAZING.
13. INSULATED SPANDREL GLAZING.
14. TPO MEMBRANE ROOFING
15. ELEVATOR SHAFT WITH FIRE-RATED ENCLOSURE.
16. METAL PANEL WALL SYSTEM.
17. FEATURE METAL PANEL WALL.
18. THERMAL FIBERGLASS INSULATION.
19. MINERAL WOOL INSULATION.
20. 5/8" GYPSUM BOARD SHEATHING.
21. 5/8" GYPSUM BOARD.
22. FLUID APPLIED AIR AND WATER RESISTIVE BARRIER.
23. 6" METAL STUDS.
24. CONCRETE SLAB ON METAL DECK. RE STRUCTURE.
25. STEEL COLUMN
26. STEEL BEAM
27. CONCRETE FOUNDATION AND SLAB
28. CEILING
29. STEEL ROOF JOIST
30. SUBFRAME TO SUPPORT METAL PANEL SYSTEM.
31. PRESSURE TREATED WOOD BLOCKING.
32. STUD TRACK.
33. EYEBROW CANOPY LIGHT.
34. ROOF COVER SHEATHING.
35. CONTINOUS HORIZONTAL WALL SUPPORT. RE : STRUCTURE.
36. CURTAINWALL SYSTEM
37. Z GIRTS
38. STEEL POST
39. PLYWOOD SHEATHING
40. BACKER ROD AND SEALANT
41. ALUMINUM FLASHING
42. FLASHING MEMBRANE
43. C.F.M.F. BOX BEAM HEADER
44. BENT PLATE AT SLAB EDGE
45. STEEL ANGLE
46. TAPERED INSULATION.
47. SPRAY FOAM INSULATION
48. METAL ROOF PANEL
49. ROOF INSULATION
50. TAPERED ROOF INSULATION
51. 2" METAL STUDS
52. EDGE BEAD
53. 4" DEEP PERFORATED METAL PANEL SYSTEM
54. TRANSLUCENT ACRYLIC PANEL 1/4" FROSTED WHITE
55. LED FIXTURE
56. 2" RIGID INSULATION ON FLUID APPLIED AIR AND WATER RESISTIVE BARRIER ON 5/8" SHEATHING ON 6" COLD FORMED METAL FRAME @ 16" O.C. WITH BATT INSULATION
57. WATERPROOF MEMBRANE ON 3/4" P.T. PLYWOOD ON 'Z' GIRTS ON 2" RIGID INSULATION ON FLUID APPLIED AIR AND WATER RESISTIVE BARRIER ON 5/8" SHEATHING ON 6" COLD FORMED METAL FRAMING @ 16" O.C.
58. WOOD SLATS
59. ALUMINUM COMPOSITE PANEL
60. AIR AND WATER RESISTIVE BARRIER ON 5/8" GYPSUM SHEATHING
61. C.F.M.F. WALL SYSTEM

FSGROUP ARCHITECTS
16575 Village Drive
Houston Texas 77040
713 344 1752 PH
fsdesignbuild.com

PROJECT NAME

INFORMATION TECHNOLGY BUILDING
1419 EUGENE HEIMANN CIRCLE
FORT BEND COUNTY . RICHMOND . TEXAS 77469

CONSULTANTS

PROFESSIONAL SEAL

REGISTERED ARCHITECT FAKHRUDDIN N SABIR 22631 STATE OF TEXAS
5/15/2024

ISSUED FOR

ISSUED FOR PROPOSALS AND PERMIT

REVISIONS

No.	DESCRIPTION	DATE

KEY PLAN

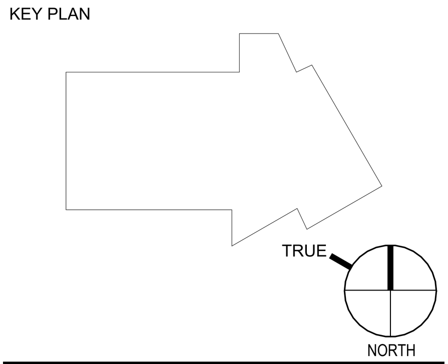

SHEET TITLE

WALL SECTIONS

SCALE: As indicated

DATE: 05/15/2024

PROJECT NUMBER: 2319

SHEET NUMBER

A310

FILE PATH: Autodesk Docs://FBC IT Building/FBIT_A23.rvt

PLOT DATE: 5/21/2024 5:00:43 PM

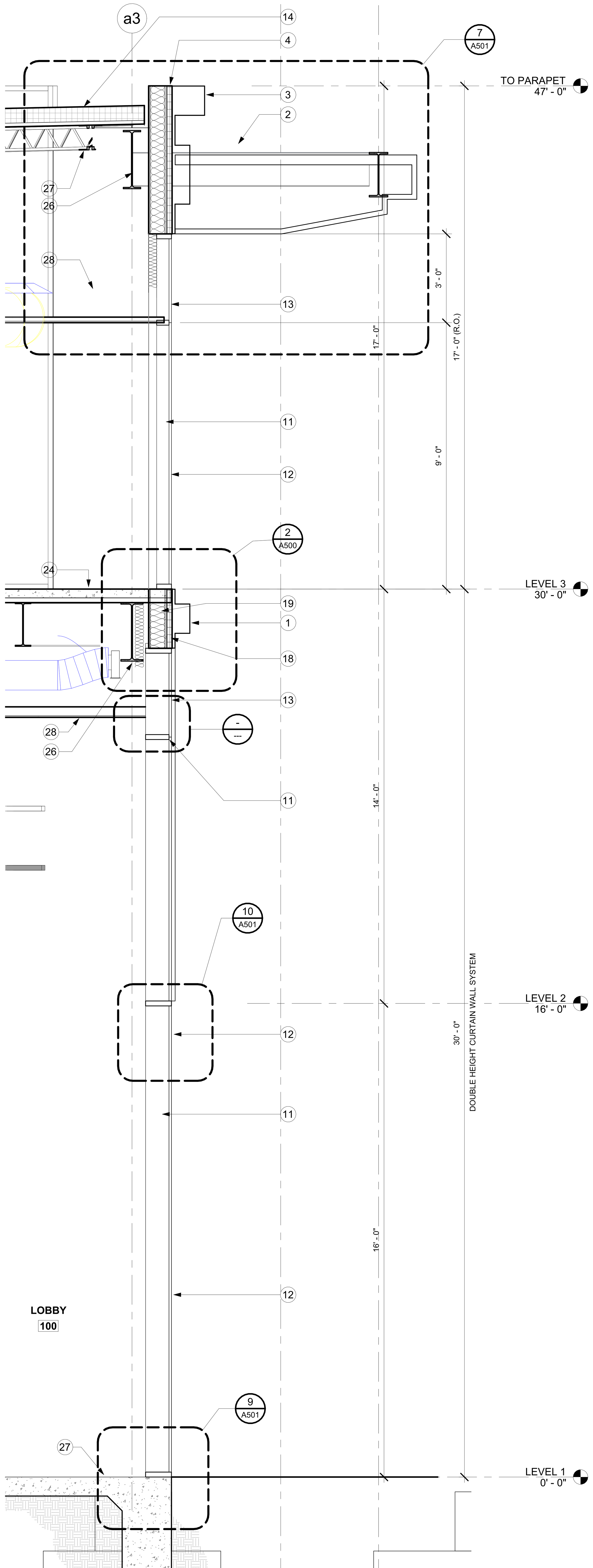

3
A311
WALL SECTION @ LOBBY
SCALE : 1/2" = 1'-0"

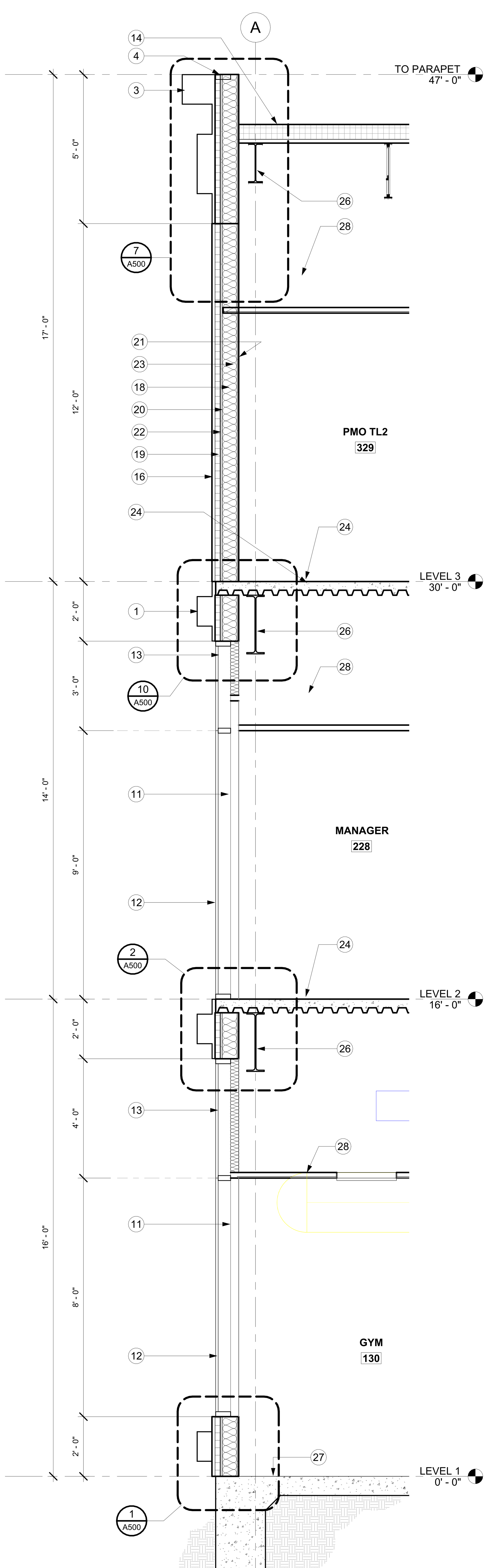

2
A311
WALL SECTION @ WEST
SCALE : 1/2" = 1'-0"

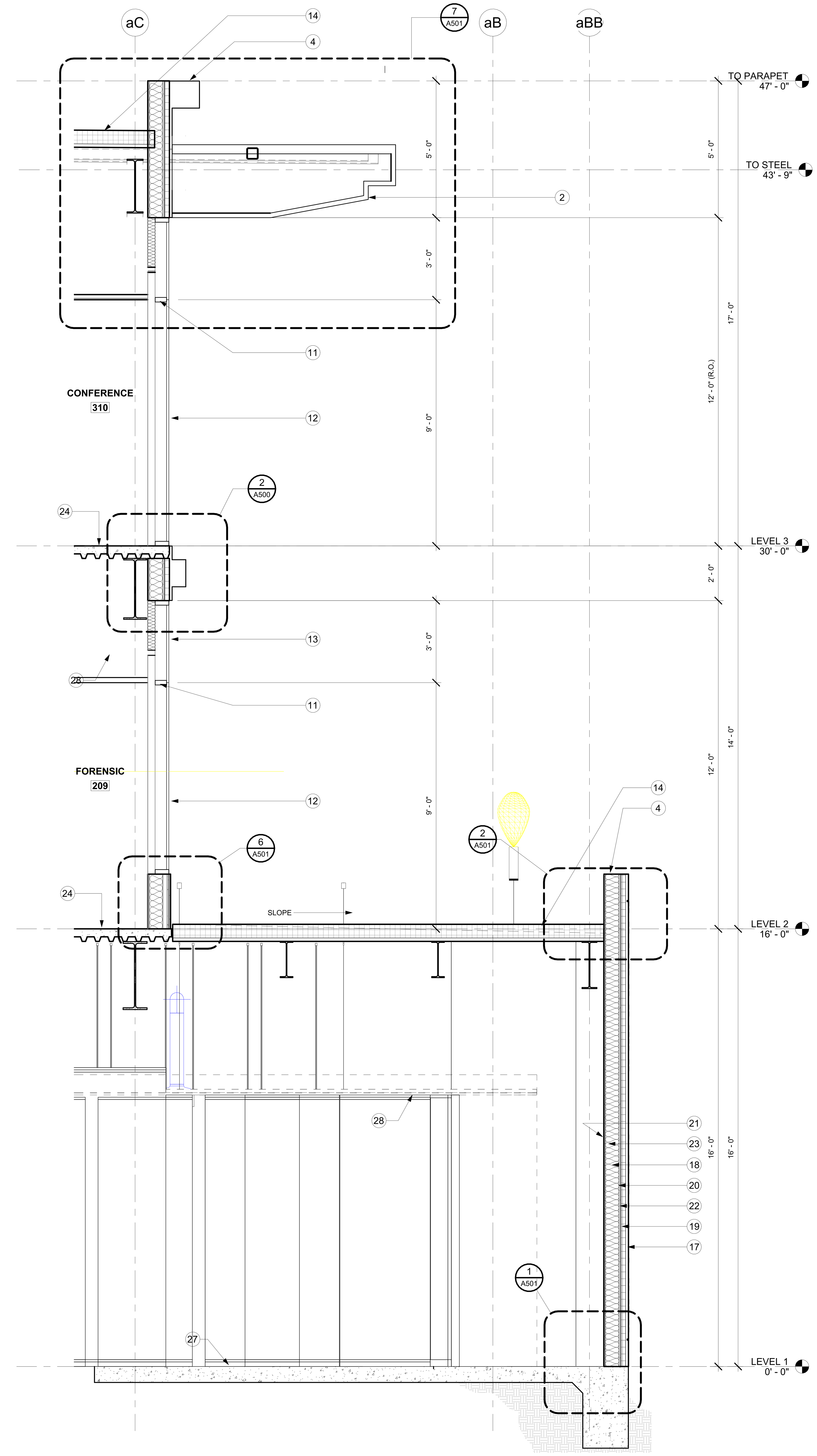

1
A311
WALL SECTION @ EAST
SCALE : 1/2" = 1'-0"

FSGROUP ARCHITECTS
16575 Village Drive
Houston Texas 77040
713 344 1752 PH
fsdesignbuild.com

PROJECT NAME

INFORMATION TECHNOLGY BUILDING
1419 EUGENE HEIMANN CIRCLE
FORT BEND COUNTY . RICHMOND . TEXAS 77469

CONSULTANTS

PROFESSIONAL SEAL

ISSUED FOR
ISSUED FOR PROPOSALS AND PERMIT

REVISIONS

No.	DESCRIPTION	DATE

KEY PLAN

SHEET TITLE
WALL SECTIONS

SCALE 1/2" = 1'-0"
DATE 05/15/2024
PROJECT NUMBER 2319
SHEET NUMBER
A311

PLOT DATE: 5/21/2024 5:01:09 PM
FILE PATH: Autodesk Docs://FBC IT Building/FBIT_A23.rvt

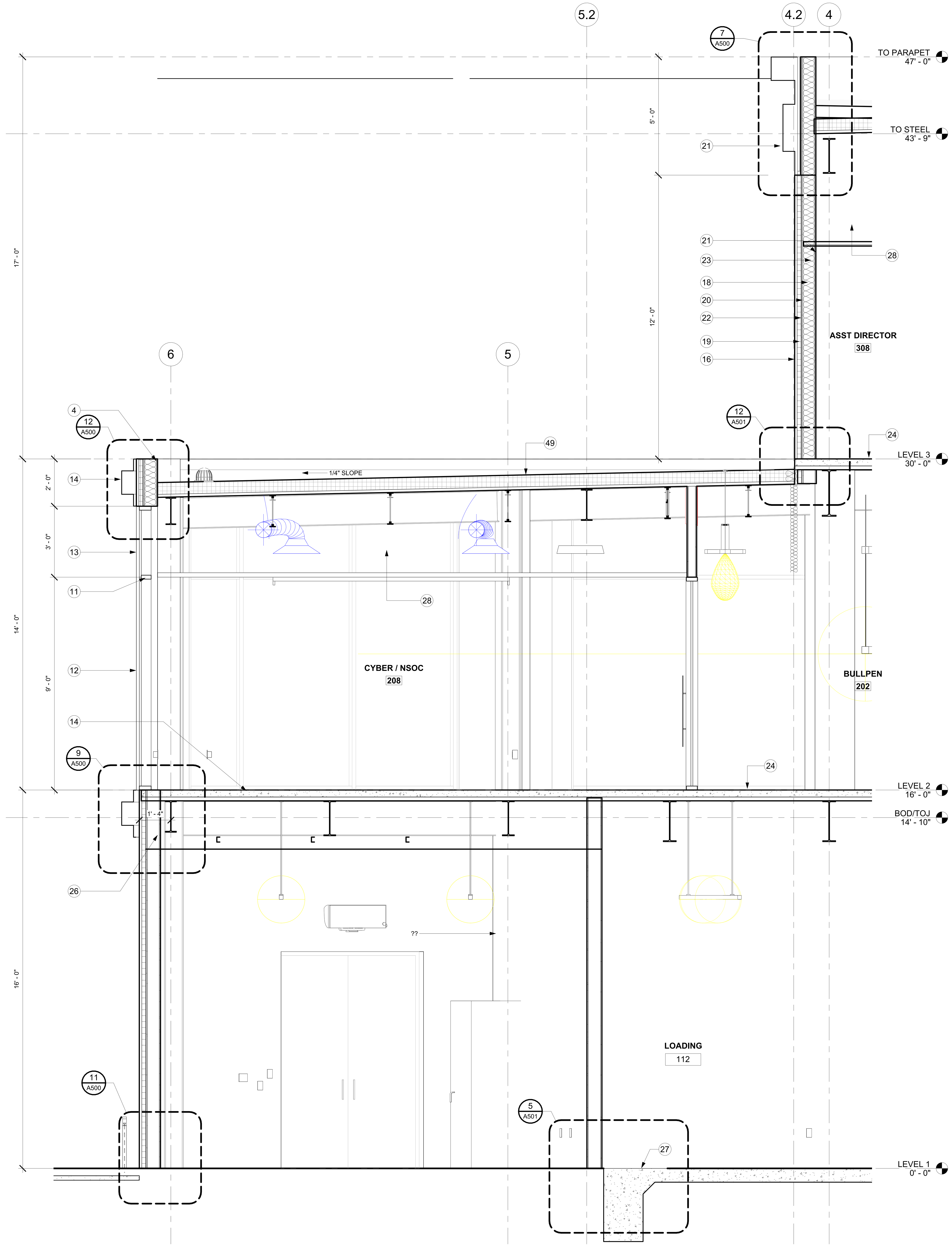

2
A312
WALL SECTION @ LOADING DOCK
SCALE : 1/2" = 1'-0"

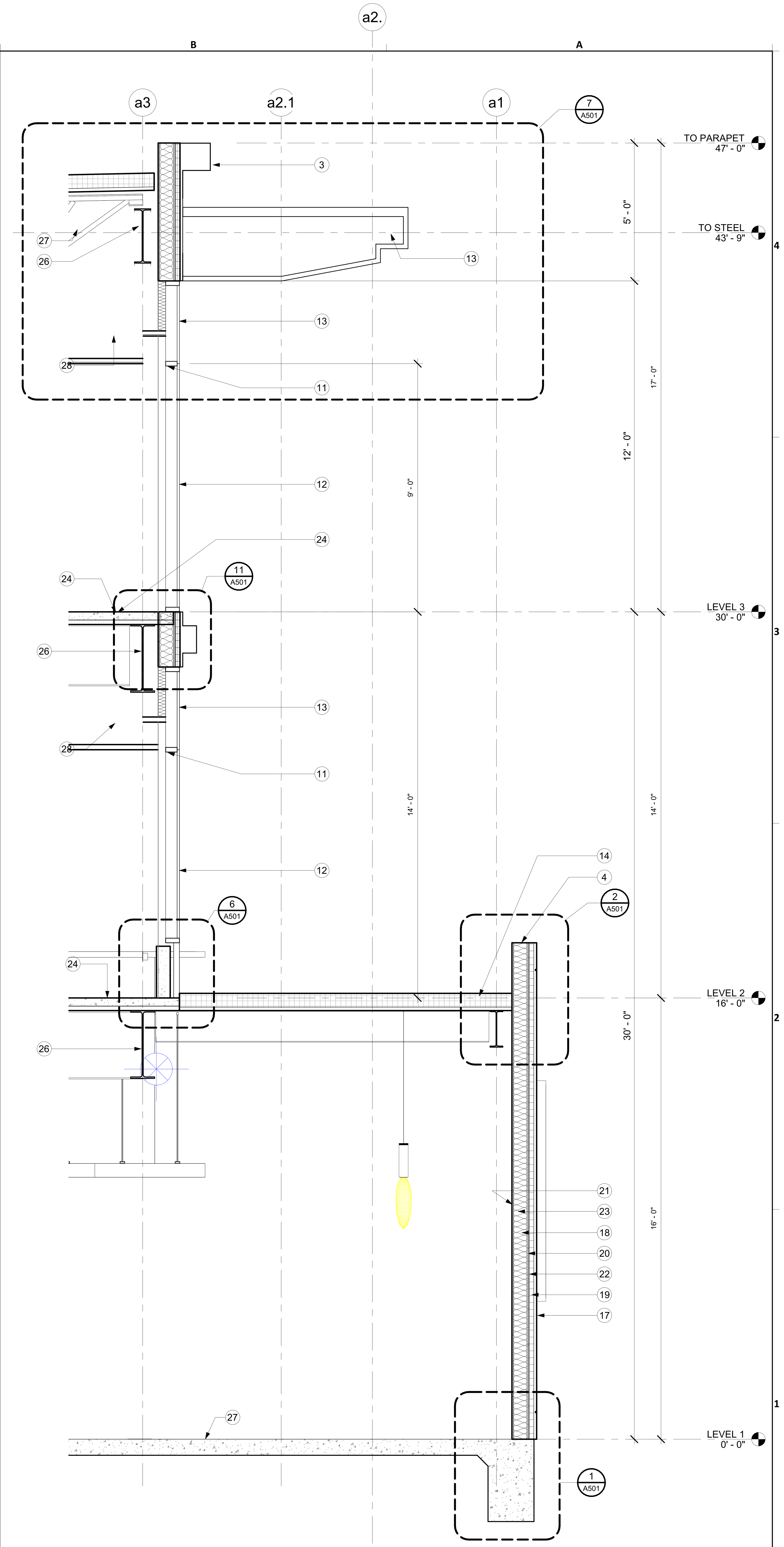

1
A312
WALL SECTION @ TRAINING ROOM VIEW EAST
SCALE : 1/2" = 1'-0"

FILE PATH: Autodesk Docs://FBC IT Building/FBIT_A23.rvt

PLOT DATE: 5/21/2024 5:01:31 PM

FSGROUP®
ARCHITECTS
16575 Village Drive
Houston Texas 77040
713 344 1752 PH
fsdesignbuild.com

PROJECT NAME

THE STATE OF TEXAS
FORT BEND COUNTY

INFORMATION TECHNOLGY BUILDING
1419 EUGENE HEIMANN CIRCLE
FORT BEND COUNTY . RICHMOND . TEXAS 77469

CONSULTANTS

PROFESSIONAL SEAL

REGISTERED ARCHITECT
FAKHRUDDIN N. SABIR
22631
STATE OF TEXAS
5/15/2024

ISSUED FOR
ISSUED FOR PROPOSALS AND PERMIT

REVISIONS

No.	DESCRIPTION	DATE

KEY PLAN

TRUE
NORTH

SHEET TITLE
WALL SECTIONS

SCALE: 1/2" = 1'-0"

DATE: 05/15/2024

PROJECT NUMBER: 2319

SHEET NUMBER
A312

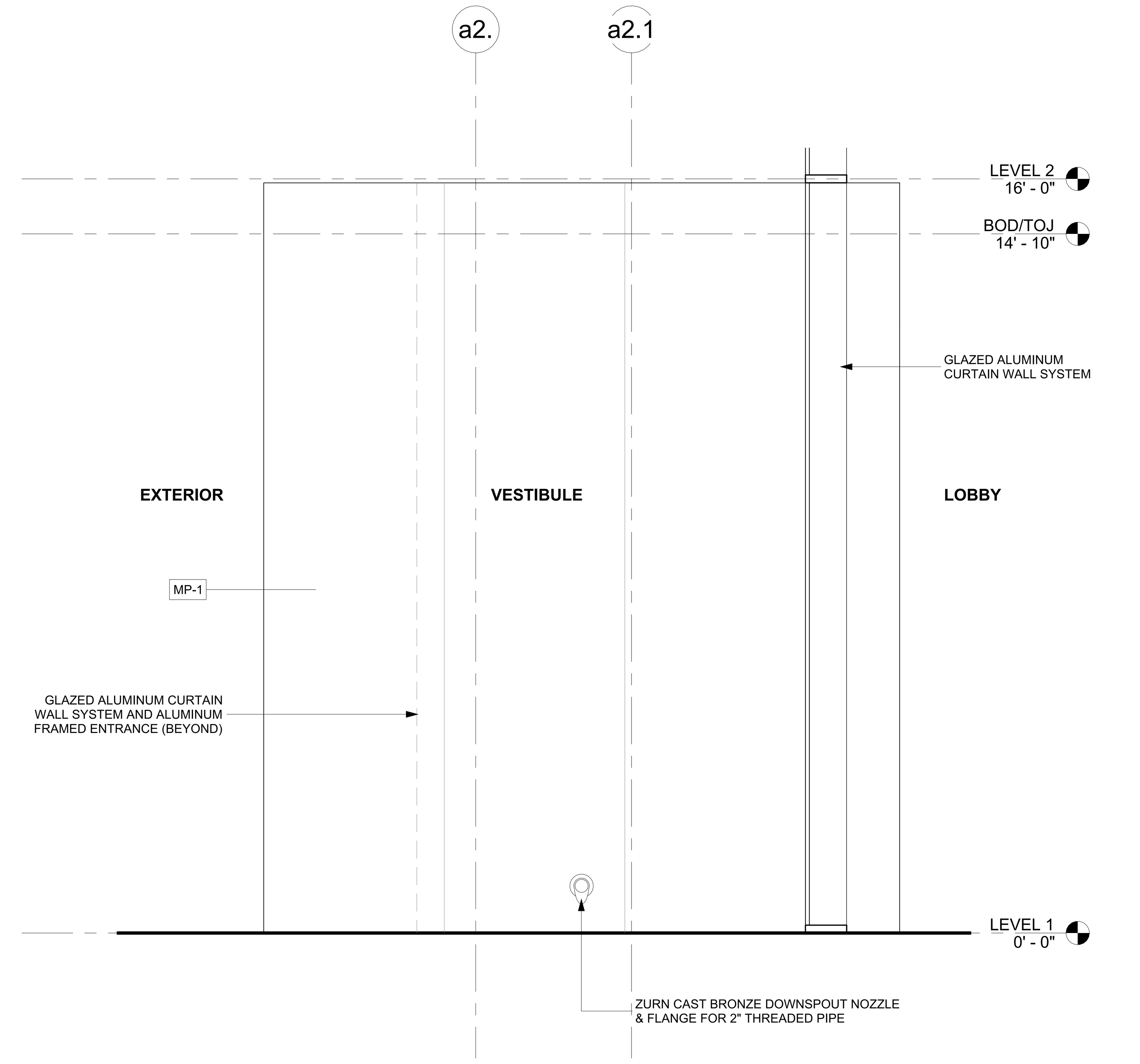

15
A400
EXTERIOR ELEVATION VIEW WEST
SCALE : 1/2" = 1'-0"

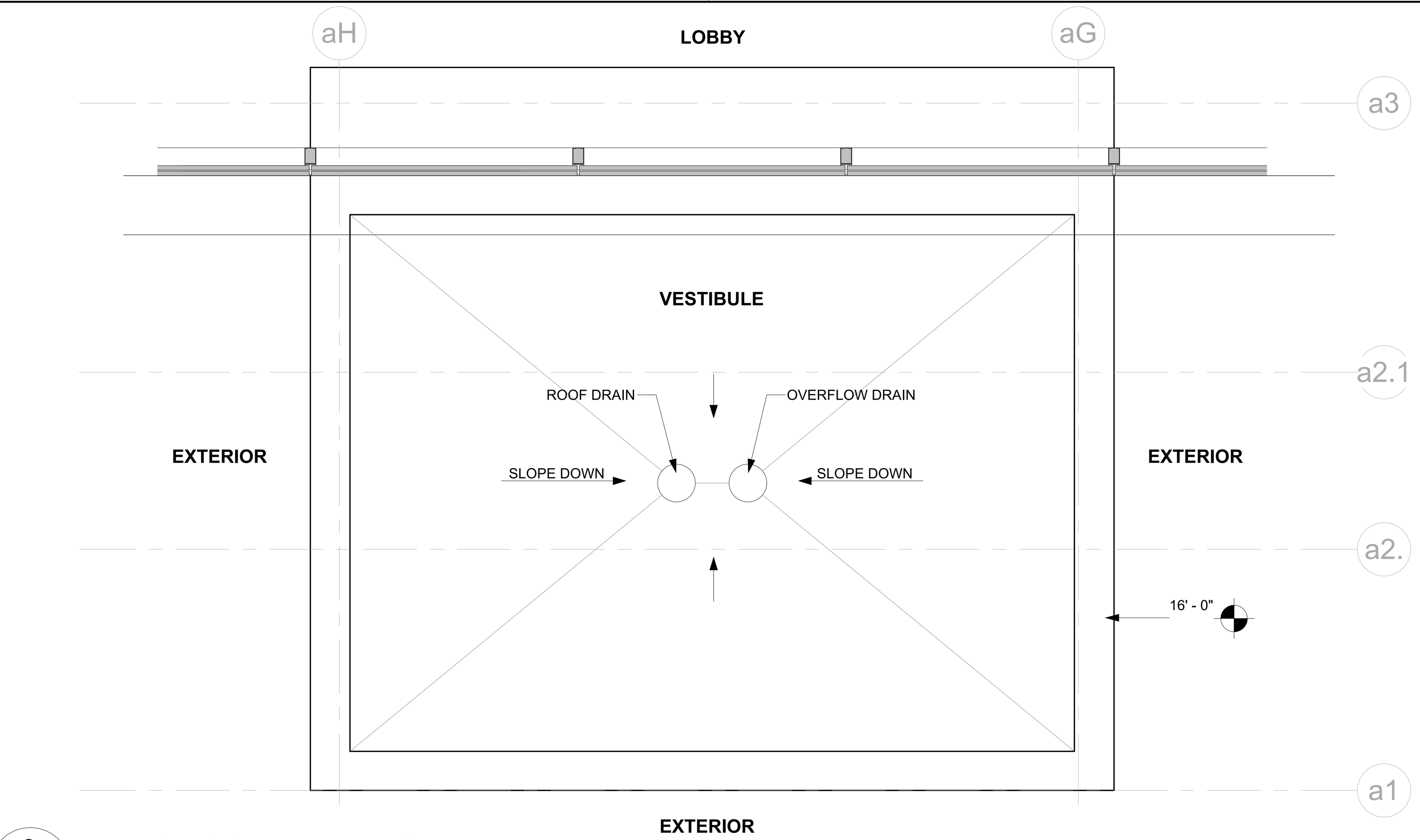

8
A400
ENLG ROOF PLAN: VESTIBULE
SCALE : 1/2" = 1'-0"

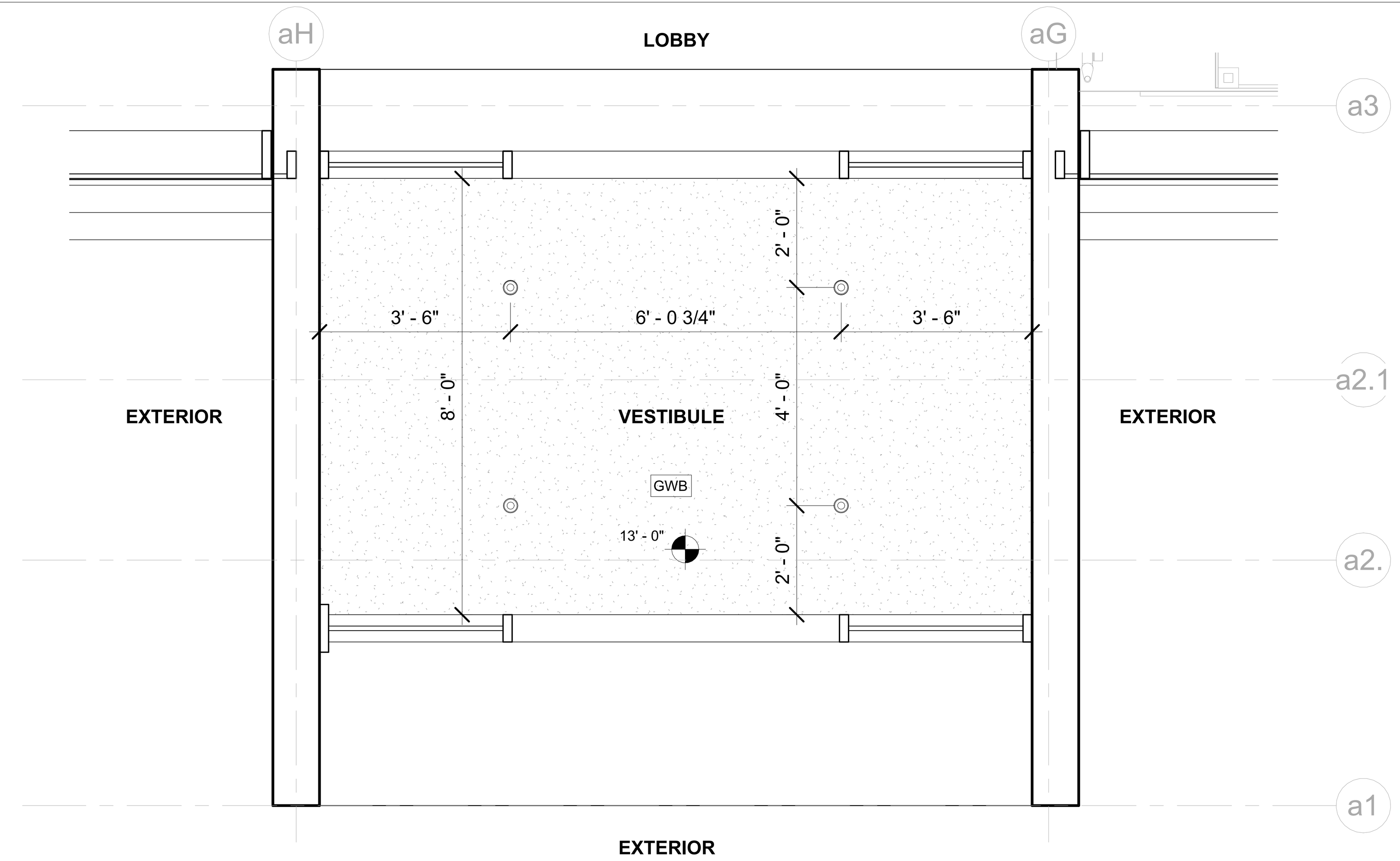

7
A400
ENLG RCP: VESTIBULE
SCALE : 1/2" = 1'-0"

13
A400
EXTERIOR ELEVATION VIEW NORTH
SCALE : 1/2" = 1'-0"

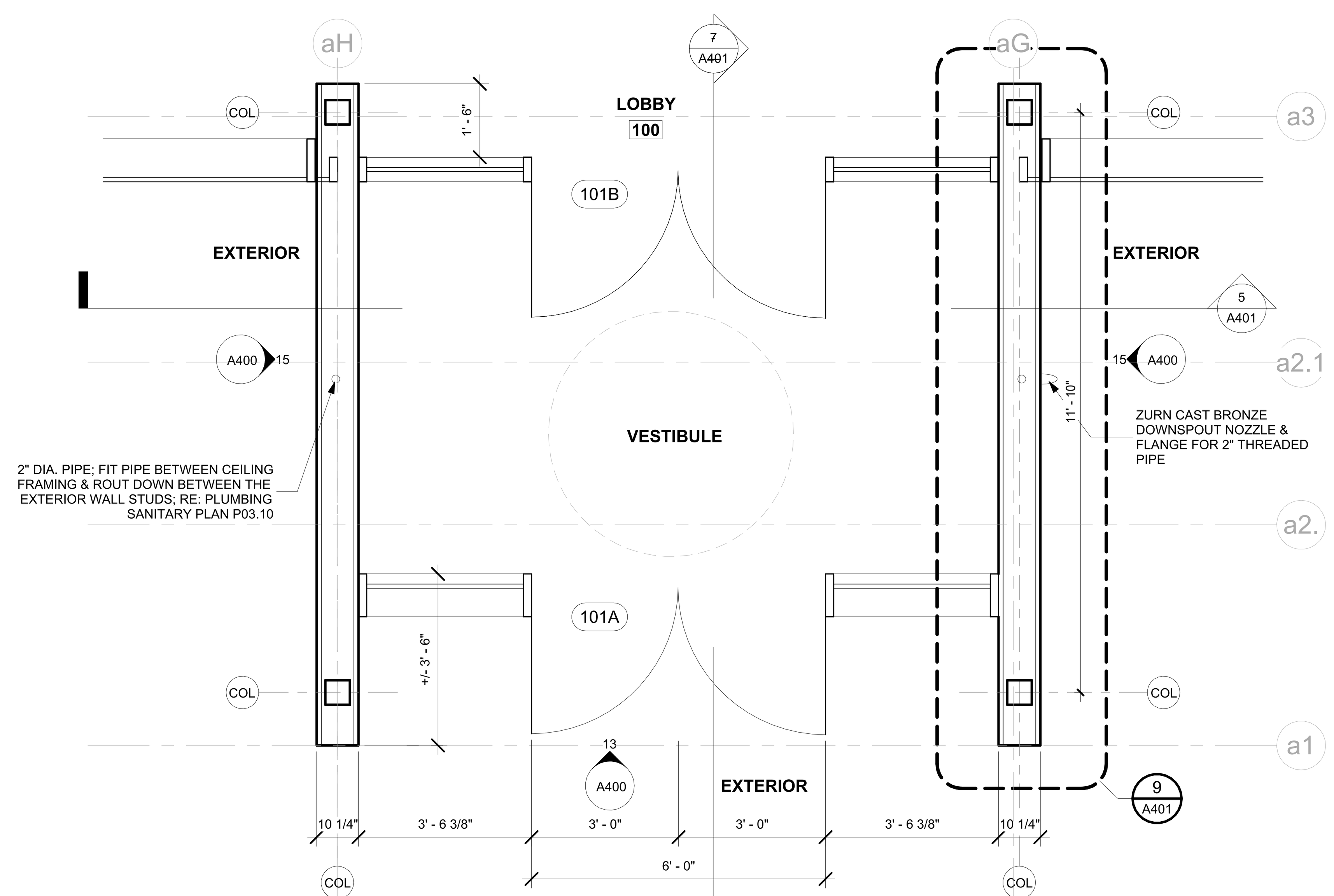

5
A400
ENLG PLAN: VESTIBULE
SCALE : 1/2" = 1'-0"

FILE PATH: Autodesk Docs://FBC IT Building/FBIT_A23.rvt

PLOT DATE: 5/21/2024 5:01:50 PM

FSGROUP ARCHITECTS
16575 Village Drive
Houston Texas 77040
713 344 1752 PH
fsdesignbuild.com

PROJECT NAME

THE STATE OF TEXAS
FORT BEND COUNTY

INFORMATION TECHNOLGY BUILDING
1419 EUGENE HEIMANN CIRCLE
FORT BEND COUNTY . RICHMOND . TEXAS 77469

CONSULTANTS

PROFESSIONAL SEAL

REGISTERED ARCHITECT
FAKHRUDDIN N. SABIR
22631
STATE OF TEXAS
5/15/2024

ISSUED FOR
ISSUED FOR PROPOSALS AND PERMIT

REVISIONS

No.	DESCRIPTION	DATE

KEY PLAN

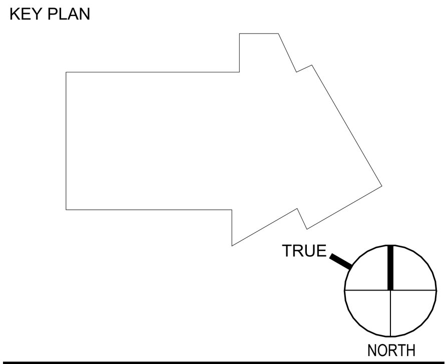

SHEET TITLE
VESTIBULE ENLARGED PLANS & ELEVATIONS

SCALE
1/2" = 1'-0"

DATE
05/15/2024

PROJECT NUMBER
2319

SHEET NUMBER
A400

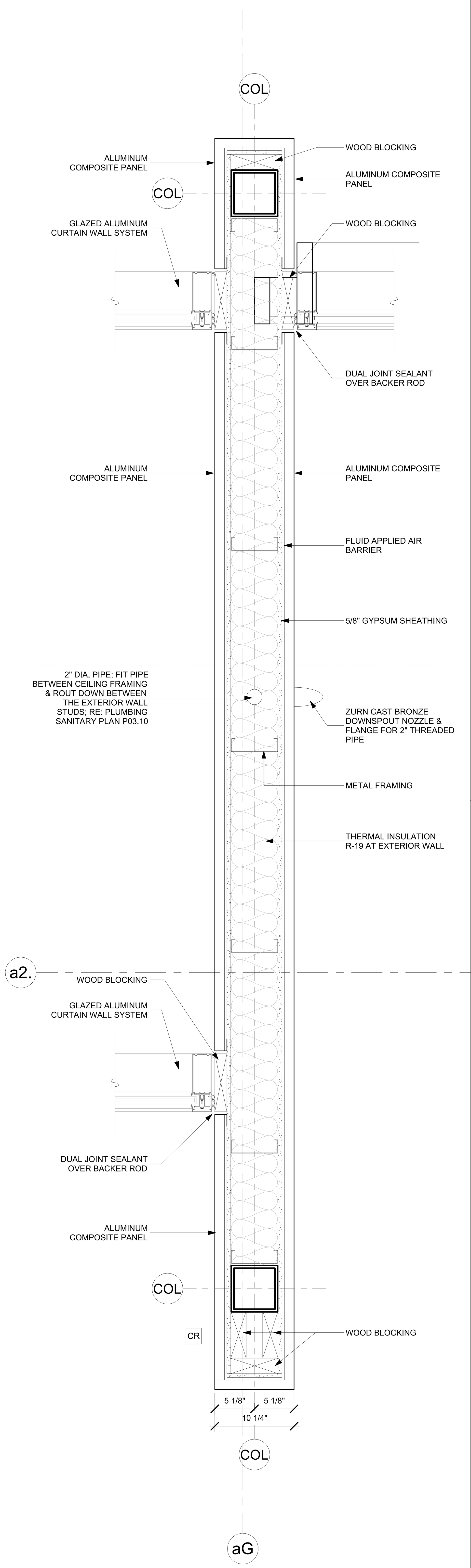

9
A401
VESTIBULE - PLAN DETAIL 1
SCALE : 1 1/2" = 1'-0"

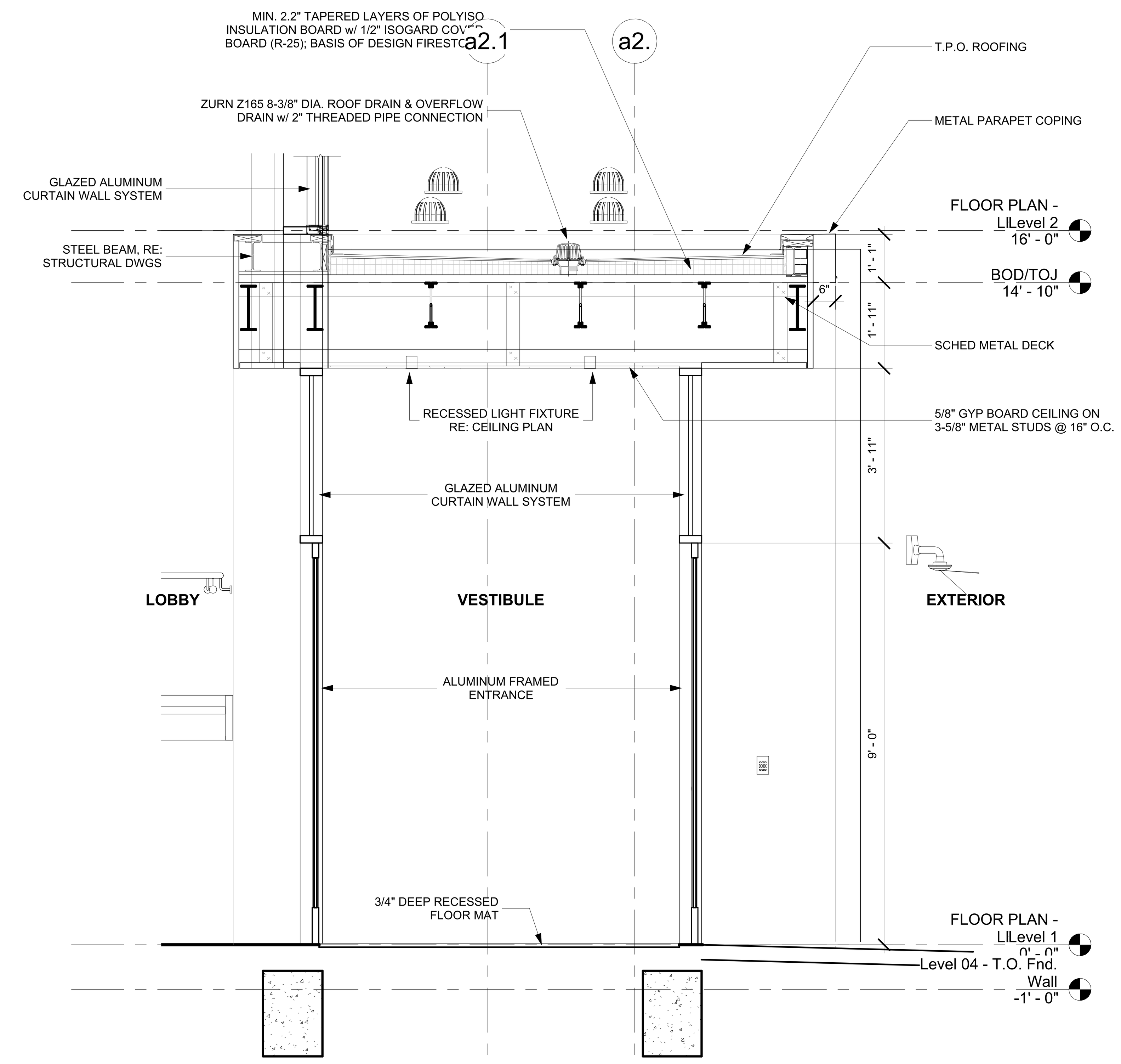

7
A401
SECTION NORTH-SOUTH VIEW EAST
SCALE : 1/2" = 1'-0"

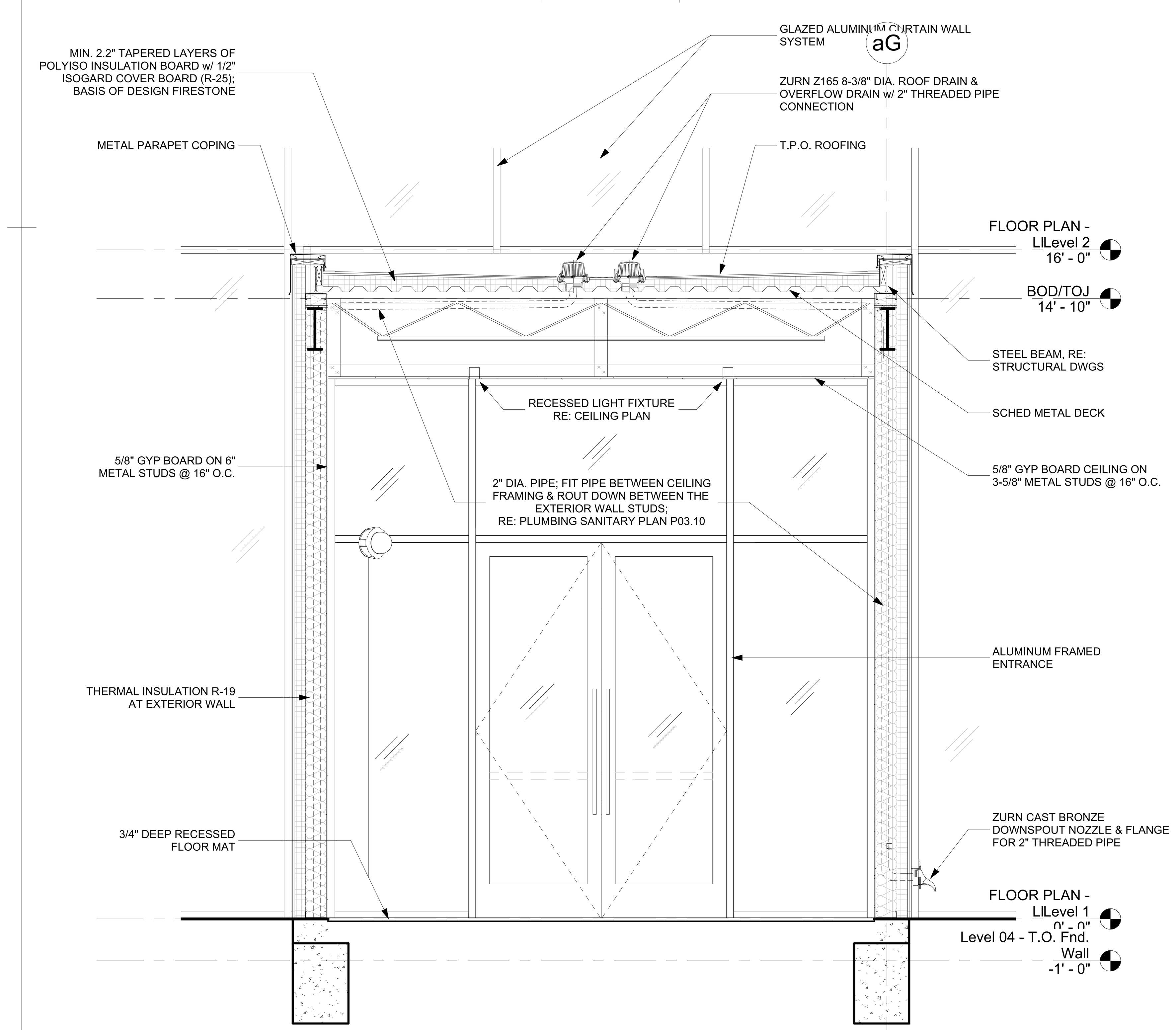

5
A401
SECTION EAST-WEST VIEW NORTH
SCALE : 1/2" = 1'-0"

FILE PATH: Autodesk Docs://FBC IT Building/FBIT_A23.rvt
PLOT DATE: 5/21/2024 5:02:19 PM

FSGROUP ARCHITECTS
16575 Village Drive
Houston Texas 77040
713 344 1752 PH
fsdesignbuild.com

PROJECT NAME

THE STATE OF TEXAS FORT BEND COUNTY

INFORMATION TECHNOLGY BUILDING
1419 EUGENE HEIMANN CIRCLE
FORT BEND COUNTY . RICHMOND . TEXAS 77469

CONSULTANTS

PROFESSIONAL SEAL

REGISTERED ARCHITECT FAKHRUDDIN N. SABIR 22631 STATE OF TEXAS
5/15/2024

ISSUED FOR
ISSUED FOR PROPOSALS AND PERMIT

REVISIONS

No.	DESCRIPTION	DATE

KEY PLAN

TRUE
NORTH

SHEET TITLE
VESTIBULE
SECTIONS & DETAILS

SCALE
As indicated

DATE
05/15/2024

PROJECT NUMBER
2319

SHEET NUMBER
A401

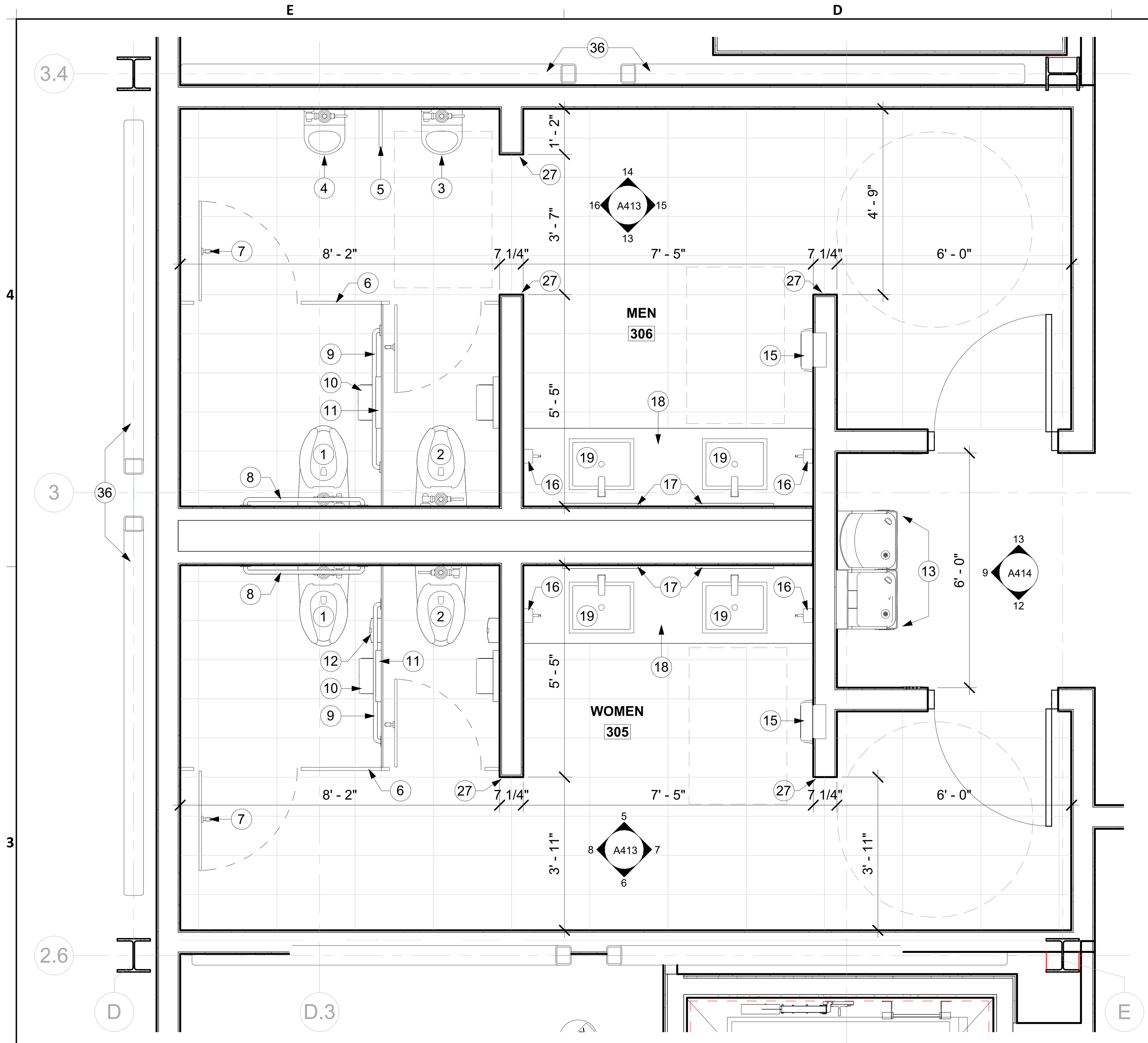

15 A410 ENLG PLAN: RESTROOMS 305 & 306
SCALE : 1/2" = 1'-0"

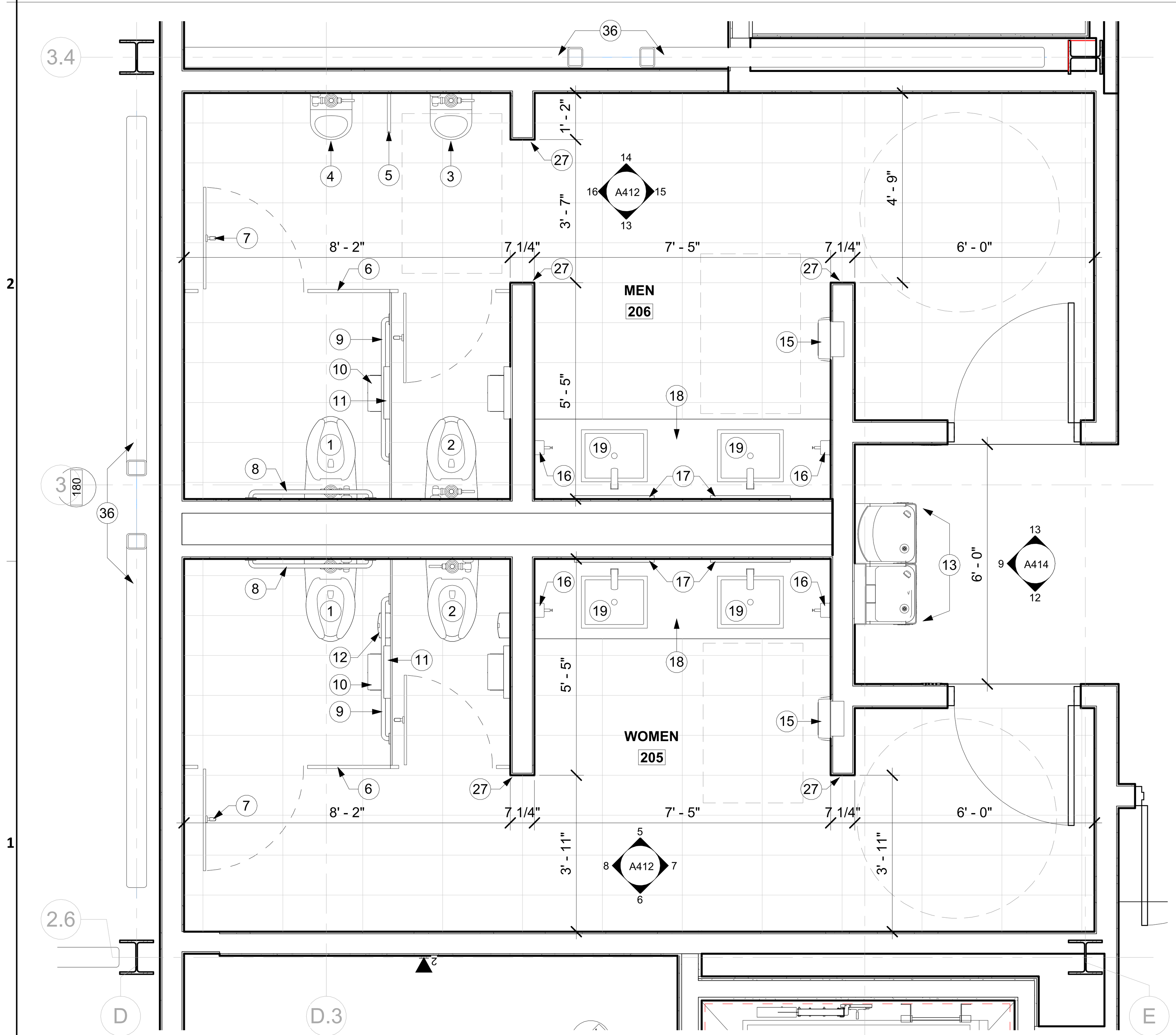

13 A410 ENLG PLAN: RESTROOMS 205 & 206
SCALE : 1/2" = 1'-0"

RESTROOM ACCESSORIES

MARK	DESCRIPTION	MODEL	MANUFACTURER	QUANTITY	COMMENTS
T-01	2-Roll Side-by-Side Toilet Paper Dispenser	56798	GP PRO Georgia-Pacific LLC	17	On Side wall
T-02	Seat Cover Dispenser	B-221	Bobrick	19	On Side wall
T-03	Grab Bar 36" Long Straight	B-5806x36	Bobrick	8	On Back wall
T-04	Grab Bar 42" Long Straight	B-5806x42	Bobrick	8	On Side wall
T-05	Surface-Mounted Hat and Coat Hook	B-6827	Bobrick	15	Door panel
T-06	Sanitary Napkin Disposal Contura Series	B-270	Bobrick	11	On Side wall
T-07	8" Stainless Steel Recessed Automated Touchless Dispenser	59466A	GP PRO Georgia-Pacific LLC	6	Semi-Recessed, Mounted
T-08	Dispenser, Soap, Wall Mounted	6562	Bradley Corporation	12	Wall Mounted
T-09	Glass Mirror 24" x 48"	B-290 2448	Bobrick	15	Wall Mounted
T-10	Toilet Partition, Floor Mounted	C1010	Bobrick - Evolve	15	Floor Mounted
T-11	Folding Shower Seat	B-5191	Bobrick	2	

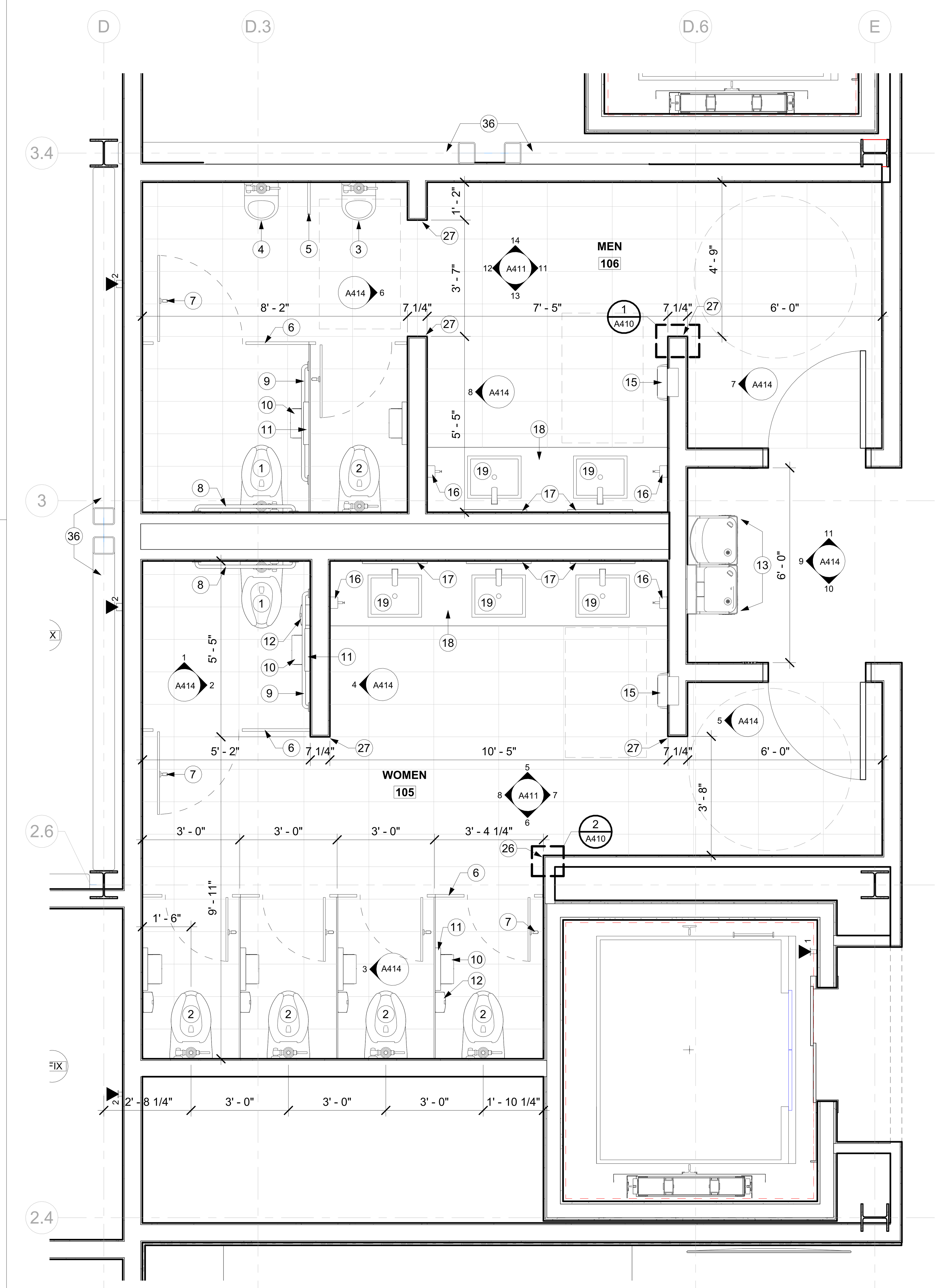

5 A410 ENLG PLAN: RESTROOMS 105 & 106
SCALE : 1/2" = 1'-0"

GENERAL NOTES: RESTROOMS & BREAK ROOMS

A. FINISH SCHEDULE & LEGEND REFER TO A900 & A901.

B. WALL PARTITION TYPES REFER TO A950.

C. RESTROOMS AT OFFICE BUILDING, PERIMETER WALLS (GYP & METAL STUD) TO GO TO UNDERSIDE OF DECK AND PROVIDE ACOUSTICAL BATT INSULATION.

D. COORDINATE INSTALLATION OF REQUIRED BLOCKING AND STABALIZING FOR FIXTURES.

E. THE STRUCTURAL STRENGTH OF GRAB BARS AT ACCESSIBLE WATER CLOSETS SHALL COMPLY WITH TEXAS ACCESSIBILTY STANDARDS 2012.

KEY NOTES: RESTROOMS & BREAK ROOMS

1 WALL MOUNTED TOILET ACCESSIBLE
2 WALL MOUNTED TOILET
3 WALL MOUNTED URINAL ACCESSIBLE
4 WALL MOUNTED URINAL
5 URINAL PARTITION T-10
6 PHENOLIC TOILET PARTITION T-10
7 CLOTHES HOOK T-05
8 36" GRAB BAR T-03
9 42" GRAB BAR T-04
10 TOILET PAPER DISPENSER T-01
11 SEAT COVER DISPENSER T-02
12 SANITARY NAPKIN DISPOSAL T-06
13 HI-LOW DRINKING FOUNTAIN WITH BOTTLE FILLER
14 PRIVACY GLASS
15 SEMI-RECESSED PAPER TOWEL DISPENSER T-07
16 SOAP DISPENSER T-08
17 MIRROR T-09
18 SOLID SURFACE COUNTERTOP
19 LAVATORY SINK UNDERMONT AT COUNTER
20 CANE APRON ACCESSORY
21 LINEAR SHOWER DRAIN
22 24" GRAB BAR
23 48" GRAB BAR
24 FOLDING SHOWER SEAT T-11
25 HANDHELD SHOWER SYSTEM
26 ALUMINUM CORNER GUARD FULL HEIGHT
27 ALUMINUM END CAP FULL HEIGHT
28 FURNITURE
29 BASE CABINET
30 UPPER CABINET
31 JANITOR'S SINK
32 REFRIGERATOR
33 GYPSUM BOARD FURR-DOWN HEADER
34 OFFICE EQUIPMENT
35 GYM EQUIPMENT
36 STRUCTURAL BRACE FRAME RE: STRUCTURAL
37 PIPE PROTECTION
38 PROTECTIVE COVER UNDER LAVATORY
39 HAND SINK & VANITY UNIT, WALL MOUNTED BASIS OF DESIGN: SINK 43003L01 AVENTO & VANITY A87600 AVENTO BY VILLEROY & BOCH
40 DRINKING FOUNTAIN FILTERED WATER FILLER AT SINK
41
42 DISHWASHER: FURNISH AND INSTALL GE GDT225SGLWW

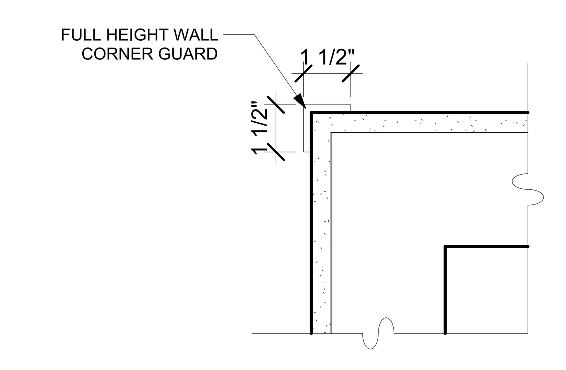

2 A410 CORNER GUARD
SCALE : 3" = 1'-0"

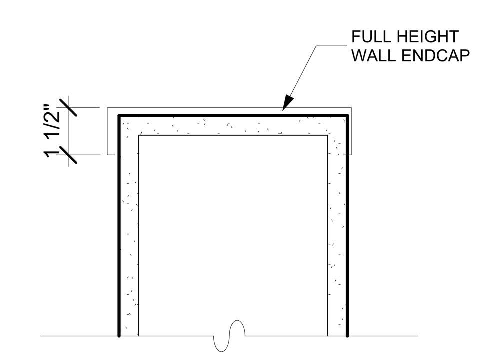

1 A410 ENDCAP GUARD
SCALE : 3" = 1'-0"

FSGROUP ARCHITECTS
16575 Village Drive
Houston Texas 77040
713 344 1752 PH
fsdesignbuild.com

PROJECT NAME

INFORMATION TECHNOLGY BUILDING
1419 EUGENE HEIMANN CIRCLE
FORT BEND COUNTY . RICHMOND . TEXAS 77469

CONSULTANTS

PROFESSIONAL SEAL

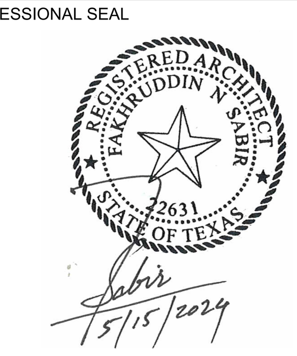

ISSUED FOR
ISSUED FOR PROPOSALS AND PERMIT

REVISIONS

No.	DESCRIPTION	DATE

KEY PLAN

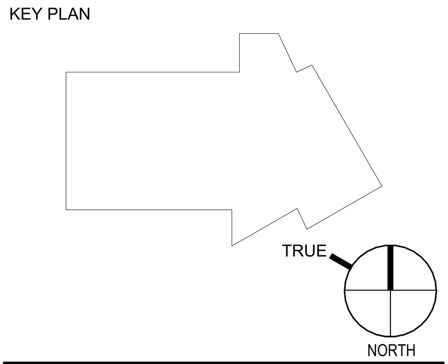

SHEET TITLE
ENLARGED PLAN RESTROOMS

SCALE As indicated
DATE 05/15/2024
PROJECT NUMBER 2319
SHEET NUMBER
A410

FILE PATH: Autodesk Docs://FBC IT Building/FBIT_A23.rvt
PLOT DATE: 5/21/2024 5:02:39 PM

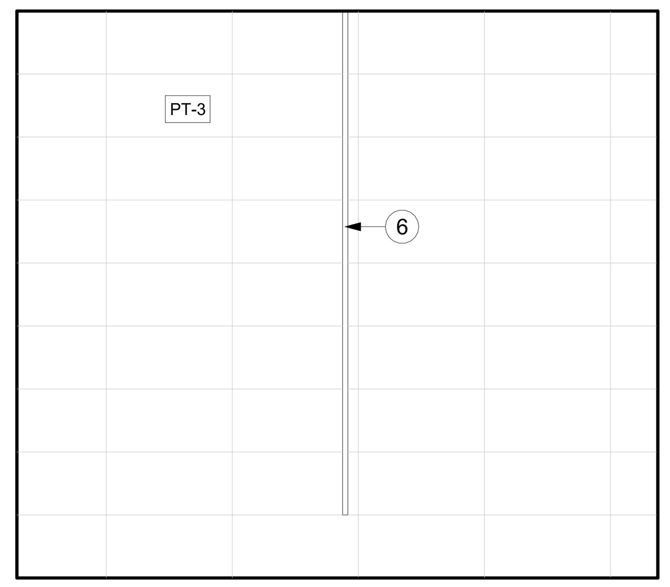

12 A411
ELEV: MEN RESTROOM 106 - WEST
SCALE : 1/2" = 1'-0"

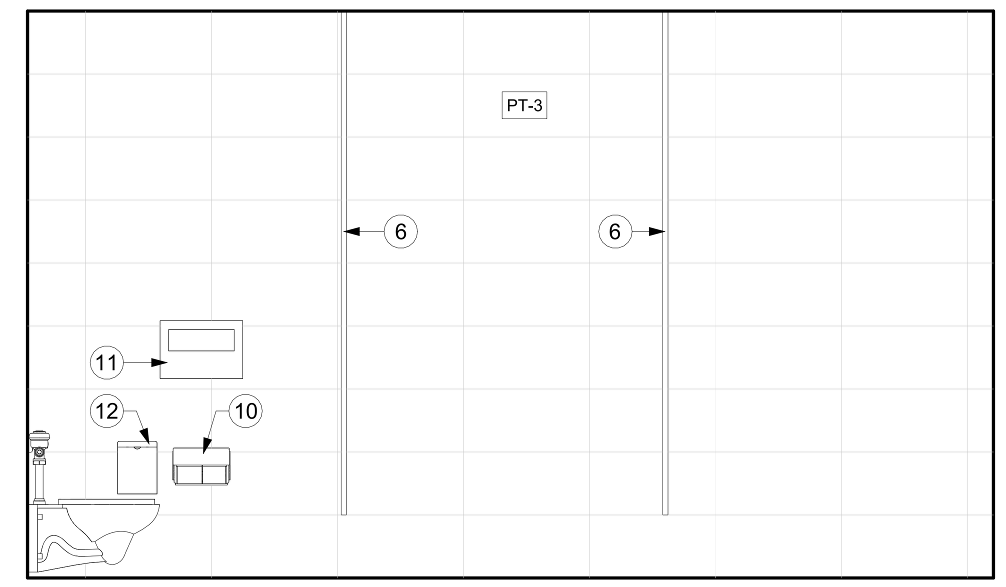

8 A411
ELEV: WOMEN RESTROOM 105 - WEST
SCALE : 1/2" = 1'-0"

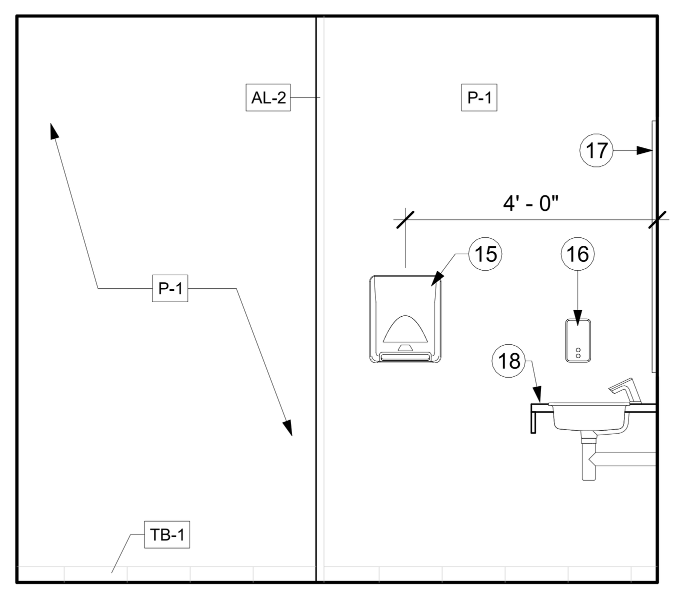

11 A411
ELEV: MEN RESTROOM 106 - EAST
SCALE : 1/2" = 1'-0"

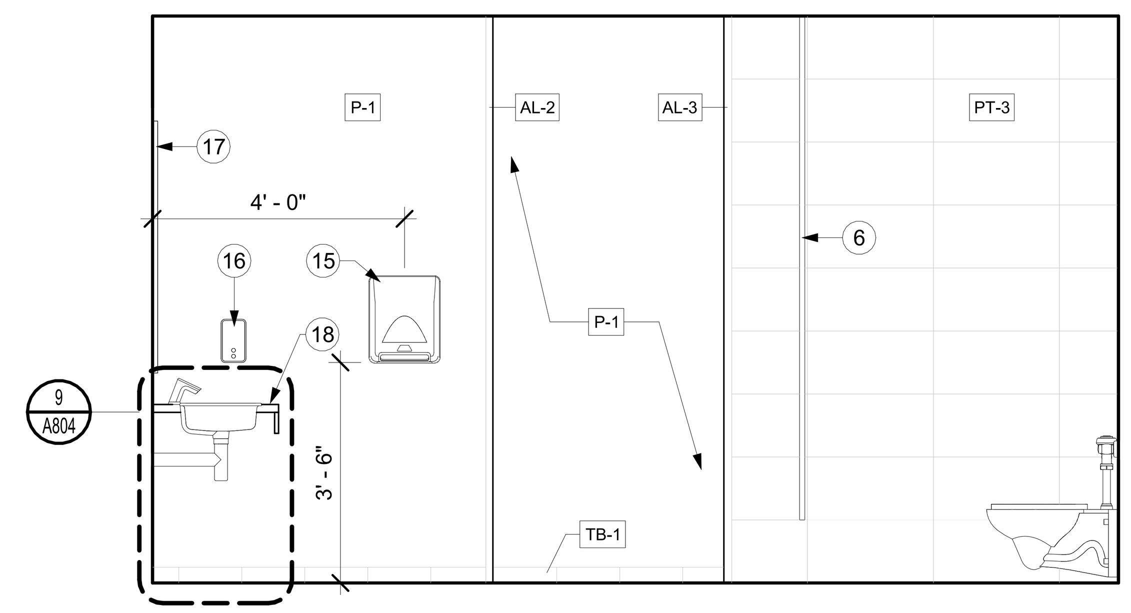

7 A411
ELEV: WOMEN RESTROOM 105 - EAST
SCALE : 1/2" = 1'-0"

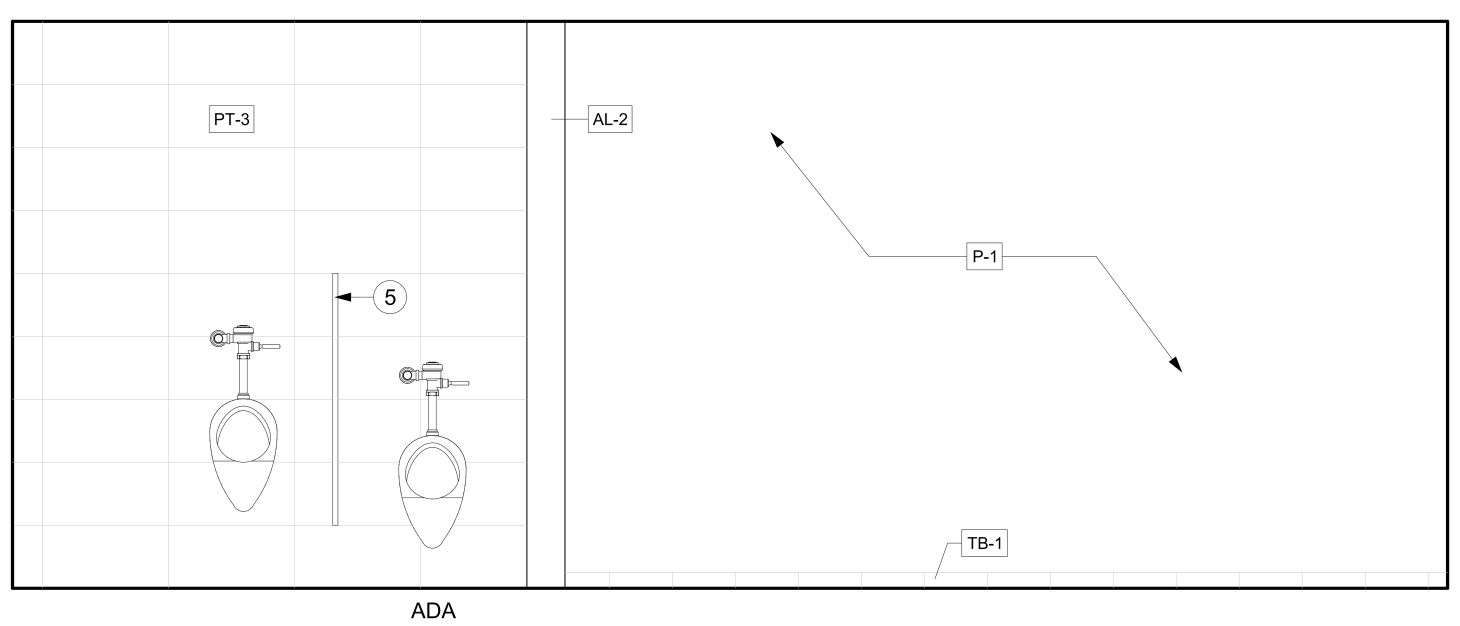

14 A411
ELEV: MEN RESTROOM 106 - NORTH
SCALE : 1/2" = 1'-0"

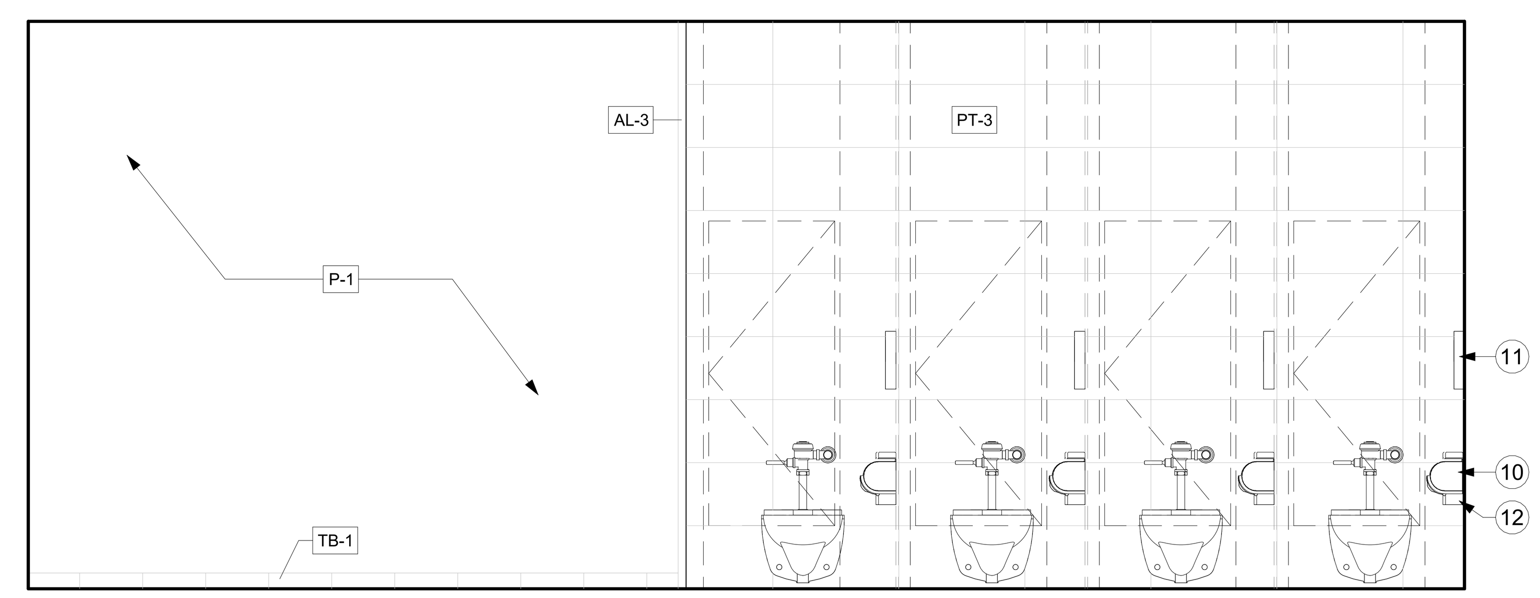

6 A411
ELEV: WOMEN RESTROOM 105 - SOUTH
SCALE : 1/2" = 1'-0"

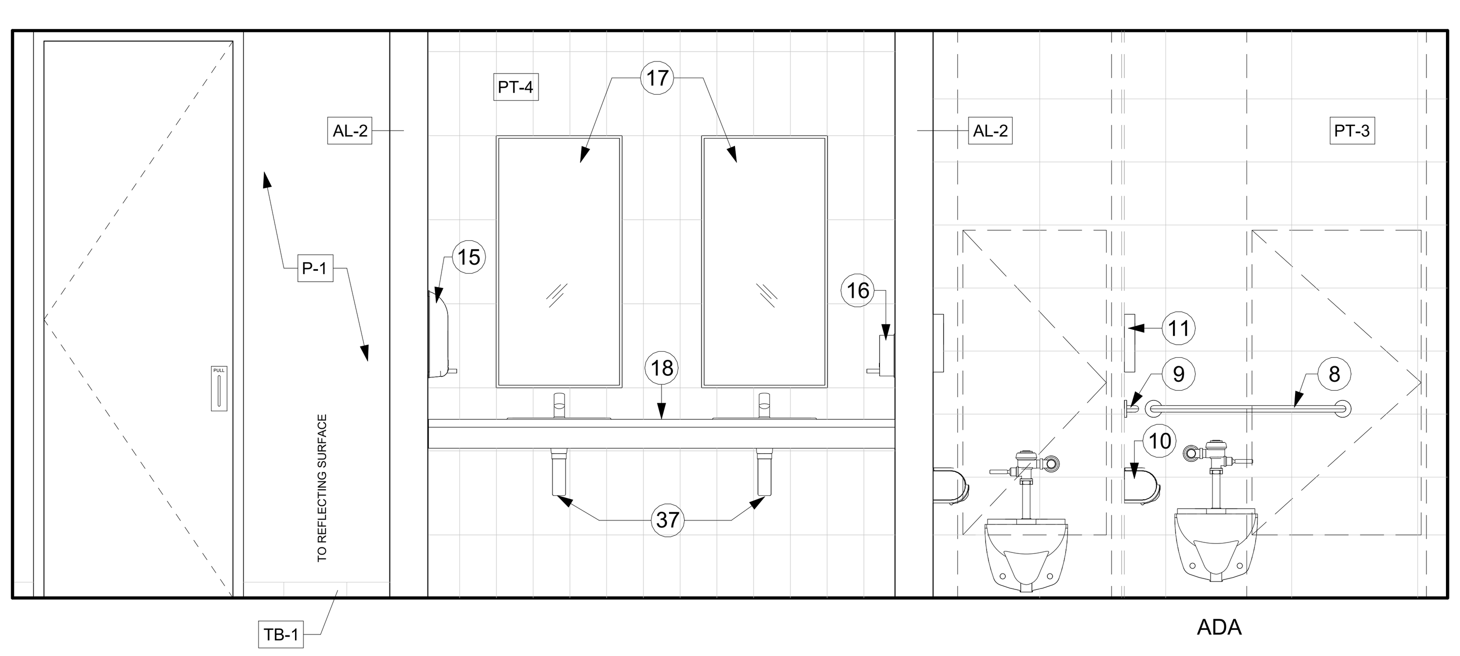

13 A411
ELEV: MEN RESTROOM 106 - SOUTH
SCALE : 1/2" = 1'-0"

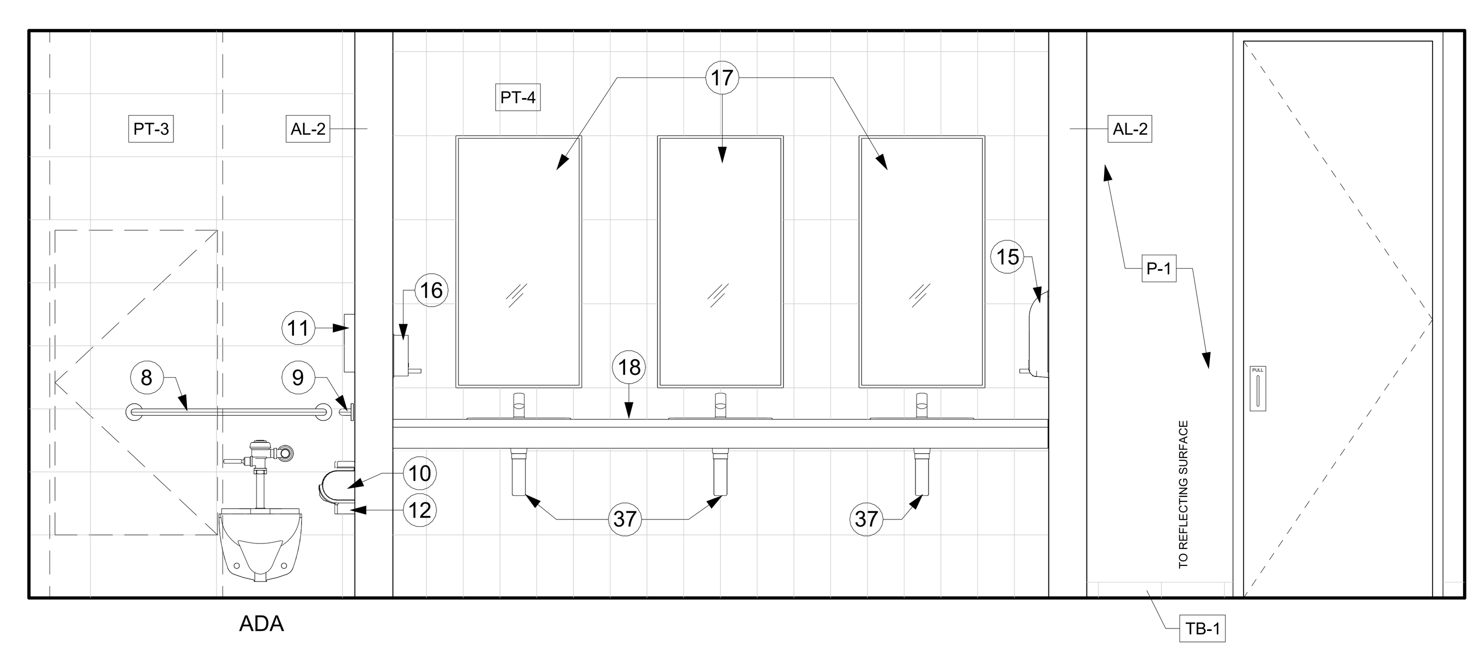

5 A411
ELEV: WOMEN RESTROOM 105 - NORTH
SCALE : 1/2" = 1'-0"

GENERAL NOTES: RESTROOMS & BREAK ROOMS

A. FINISH SCHEDULE & LEGEND REFER TO A900 & A901.

B. WALL PARTITION TYPES REFER TO A950.

C. RESTROOMS AT OFFICE BUILDING, PERIMETER WALLS (GYP & METAL STUD) TO GO TO UNDERSIDE OF DECK AND PROVIDE ACOUSTICAL BATT INSULATION.

D. COORDINATE INSTALLATION OF REQUIRED BLOCKING AND STABALIZING FOR FIXTURES.

E. THE STRUCTURAL STRENGTH OF GRAB BARS AT ACCESSIBLE WATER CLOSETS SHALL COMPLY WITH TEXAS ACCESSIBILTY STANDARDS 2012.

KEY NOTES: RESTROOMS & BREAK ROOMS 1

1 WALL MOUNTED TOILET ACCESSIBLE
2 WALL MOUNTED TOILET
3 WALL MOUNTED URINAL ACCESSIBLE
4 WALL MOUNTED URINAL
5 URINAL PARTITION T-10
6 PHENOLIC TOILET PARTITION T-10
7 CLOTHES HOOK T-05
8 36" GRAB BAR T-03
9 42" GRAB BAR T-04
10 TOILET PAPER DISPENSER T-01
11 SEAT COVER DISPENSER T-02
12 SANITARY NAPKIN DISPOSAL T-06
13 HI-LOW DRINKING FOUNTAIN WITH BOTTLE FILLER
14 PRIVACY GLASS
15 SEMI-RECESSED PAPER TOWEL DISPENSER T-07
16 SOAP DISPENSER T-08
17 MIRROR T-09
18 SOLID SURFACE COUNTERTOP
19 LAVATORY SINK UNDERMONT AT COUNTER
20 CANE APRON ACCESSORY
21 LINEAR SHOWER DRAIN
22 24" GRAB BAR
23 48" GRAB BAR
24 FOLDING SHOWER SEAT T-11
25 HANDHELD SHOWER SYSTEM
26 ALUMINUM CORNER GUARD FULL HEIGHT
27 ALUMINUM END CAP FULL HEIGHT
28 FURNITURE
29 BASE CABINET
30 UPPER CABINET
31 JANITOR'S SINK
32 REFRIGERATOR
33 GYPSUM BOARD FURR-DOWN HEADER
34 OFFICE EQUIPMENT
35 GYM EQUIPMENT
36 STRUCTURAL BRACE FRAME RE: STRUCTURAL
37 PIPE PROTECTION
38 PROTECTIVE COVER UNDER LAVATORY
39 HAND SINK & VANITY UNIT, WALL MOUNTED
BASIS OF DESIGN: SINK 43003L01 AVENTO & VANITY A87600 AVENTO
BY VILLEROY & BOCH
40 DRINKING FOUNTAIN FILTERED WATER FILLER AT SINK
41
42 DISHWASHER: FURNISH AND INSTALL GE GDT225SGLWW

FSGROUP®
ARCHITECTS
16575 Village Drive
Houston Texas 77040
713 344 1752 PH
fsdesignbuild.com

PROJECT NAME

THE STATE OF TEXAS
FORT BEND COUNTY

INFORMATION TECHNOLGY BUILDING
1419 EUGENE HEIMANN CIRCLE
FORT BEND COUNTY . RICHMOND . TEXAS 77469

CONSULTANTS

PROFESSIONAL SEAL

REGISTERED ARCHITECT
FAKHRUDDIN N. SABIR
22631
STATE OF TEXAS
5/15/2024

ISSUED FOR
ISSUED FOR PROPOSALS AND PERMIT

REVISIONS

No.	DESCRIPTION	DATE

KEY PLAN

TRUE NORTH

SHEET TITLE
ELEVATIONS RESTROOMS 105 & 106

SCALE
As indicated

DATE
05/15/2024

PROJECT NUMBER
2319

SHEET NUMBER
A411

FILE PATH: Autodesk Docs://FBC IT Building/FBIT_A23.rvt
PLOT DATE: 5/21/2024 5:03:14 PM

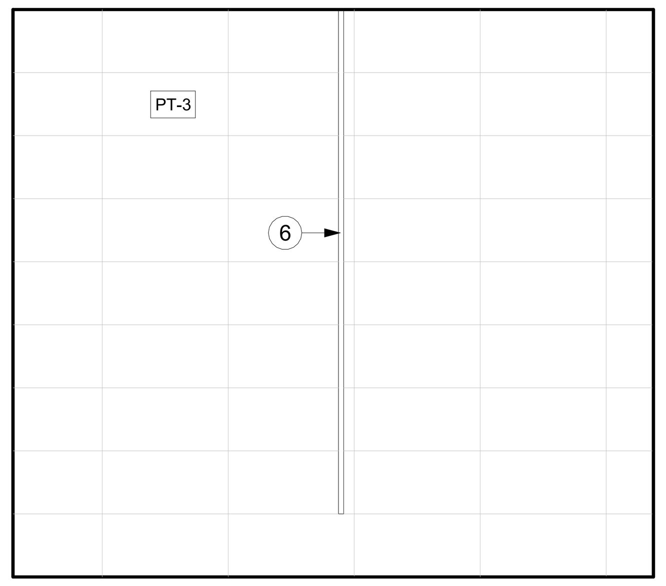

16 A412 ELEV: MEN RESTROOM 206 - WEST
SCALE : 1/2" = 1'-0"

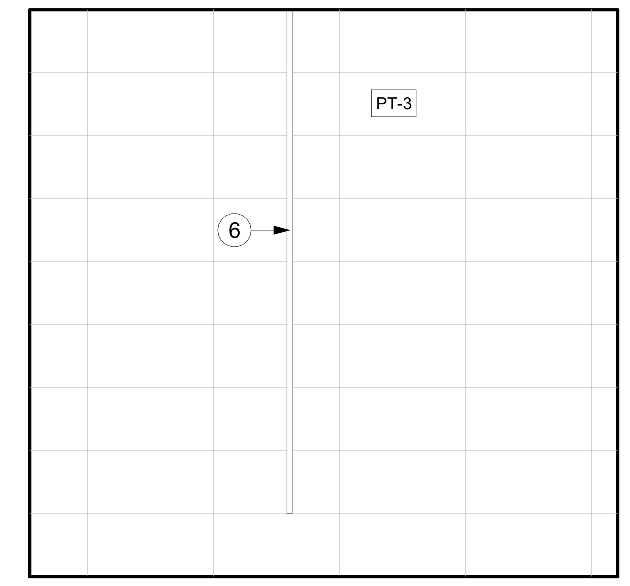

8 A412 ELEV: WOMEN RESTROOM 205 - WEST
SCALE : 1/2" = 1'-0"

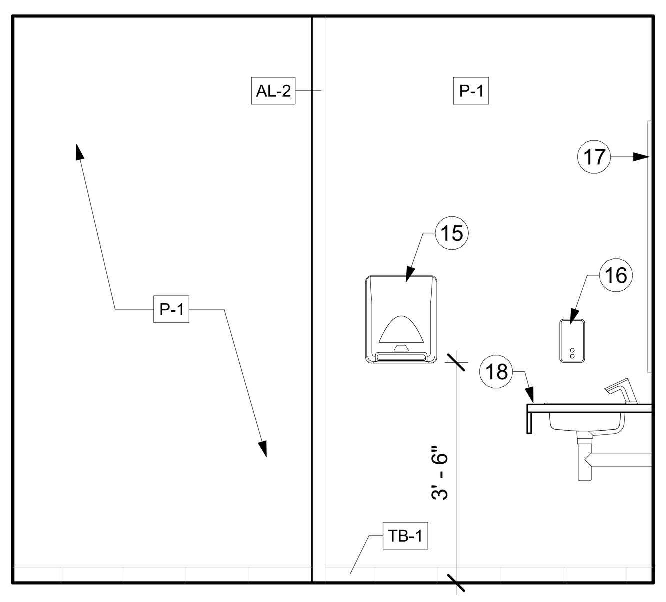

15 A412 ELEV: MEN RESTROOM 206 - EAST
SCALE : 1/2" = 1'-0"

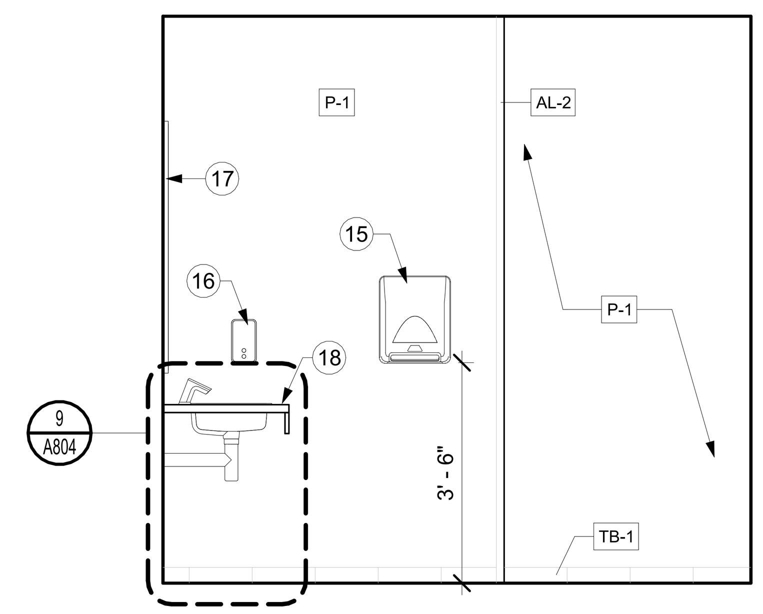

7 A412 ELEV: WOMEN RESTROOM 205 - EAST
SCALE : 1/2" = 1'-0"

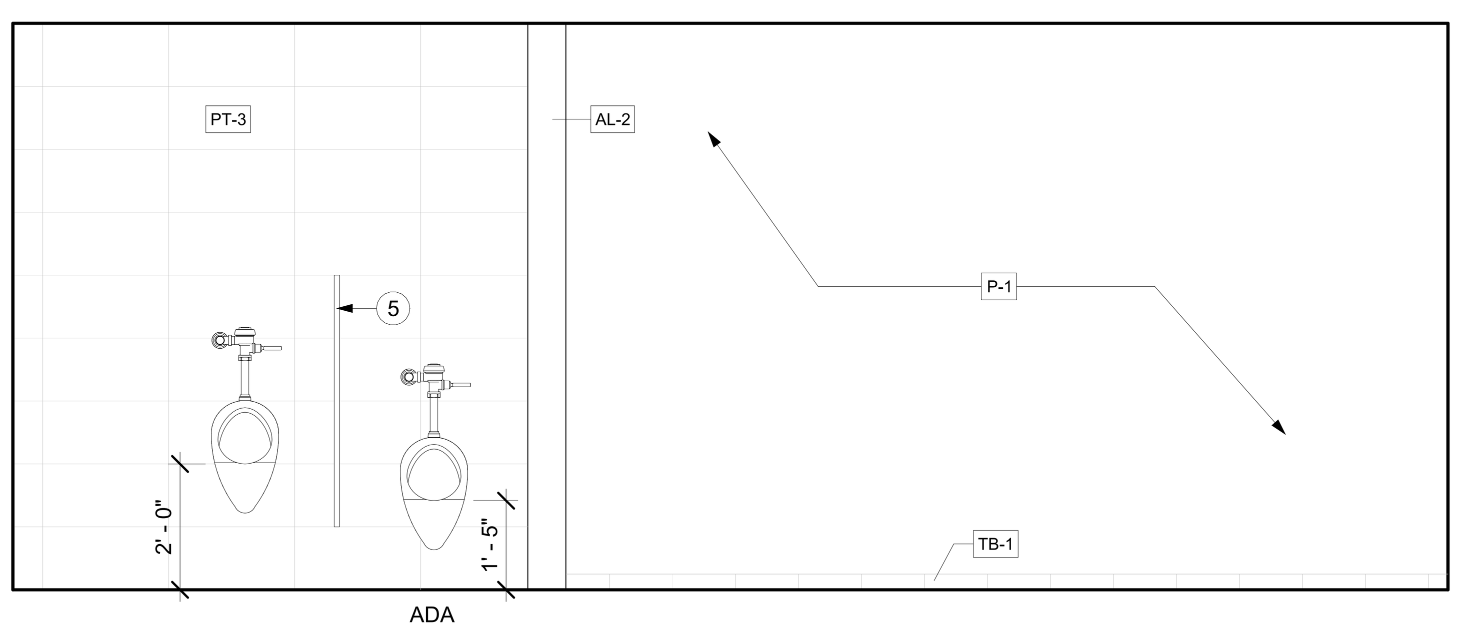

14 A412 ELEV: MEN RESTROOM 206 - NORTH
SCALE : 1/2" = 1'-0"

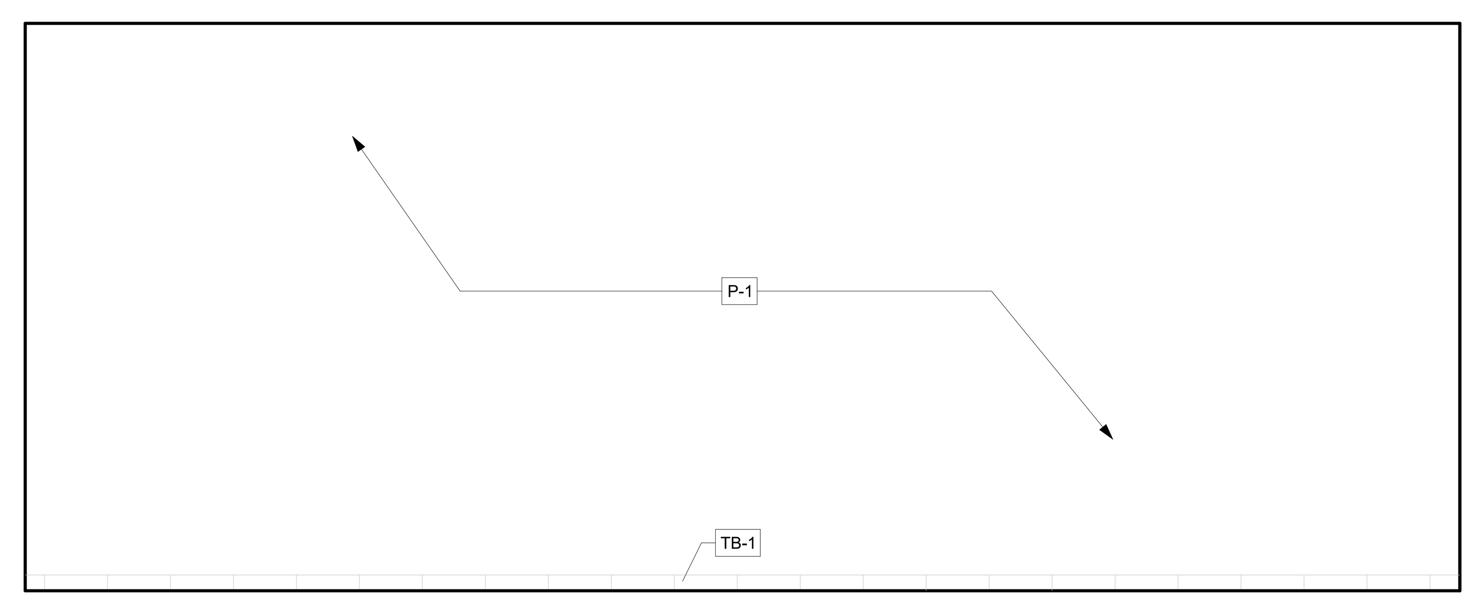

6 A412 ELEV: WOMEN RESTROOM 205 - SOUTH
SCALE : 1/2" = 1'-0"

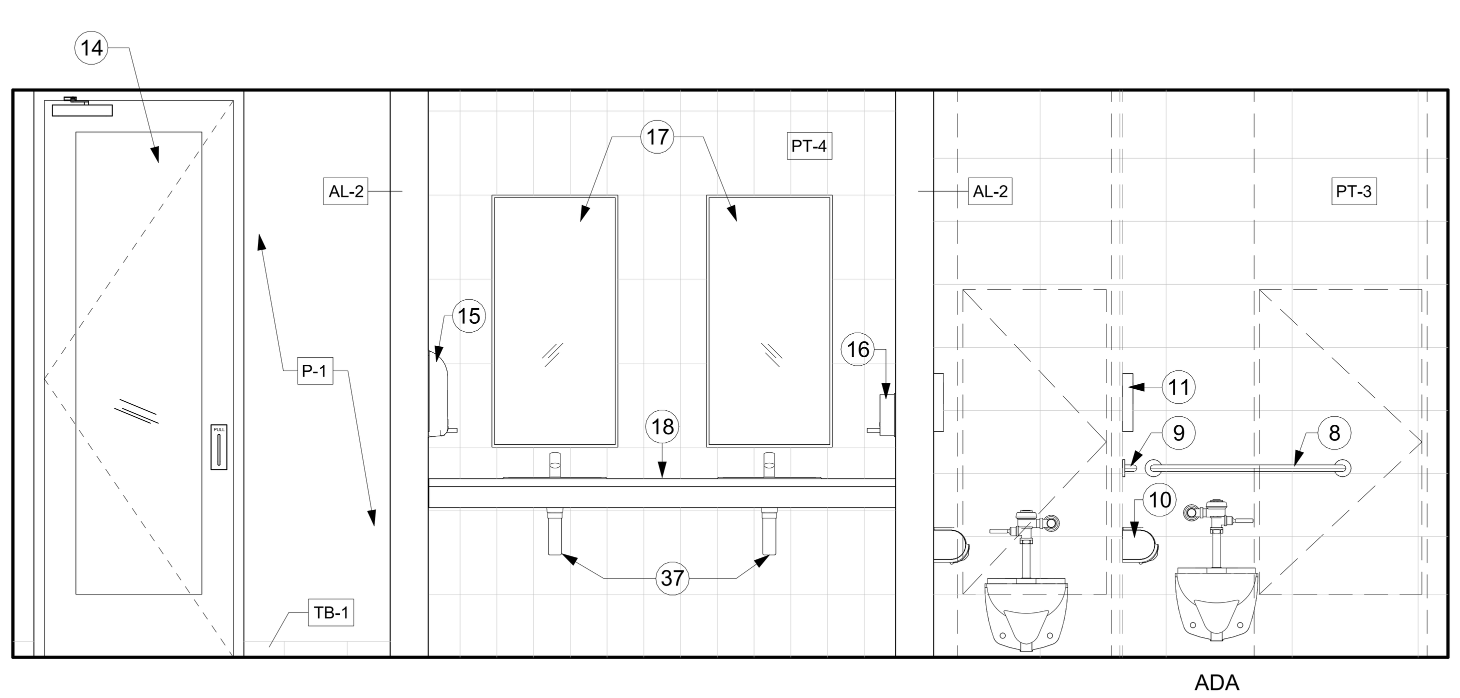

13 A412 ELEV: MEN RESTROOM 206 - SOUTH
SCALE : 1/2" = 1'-0"

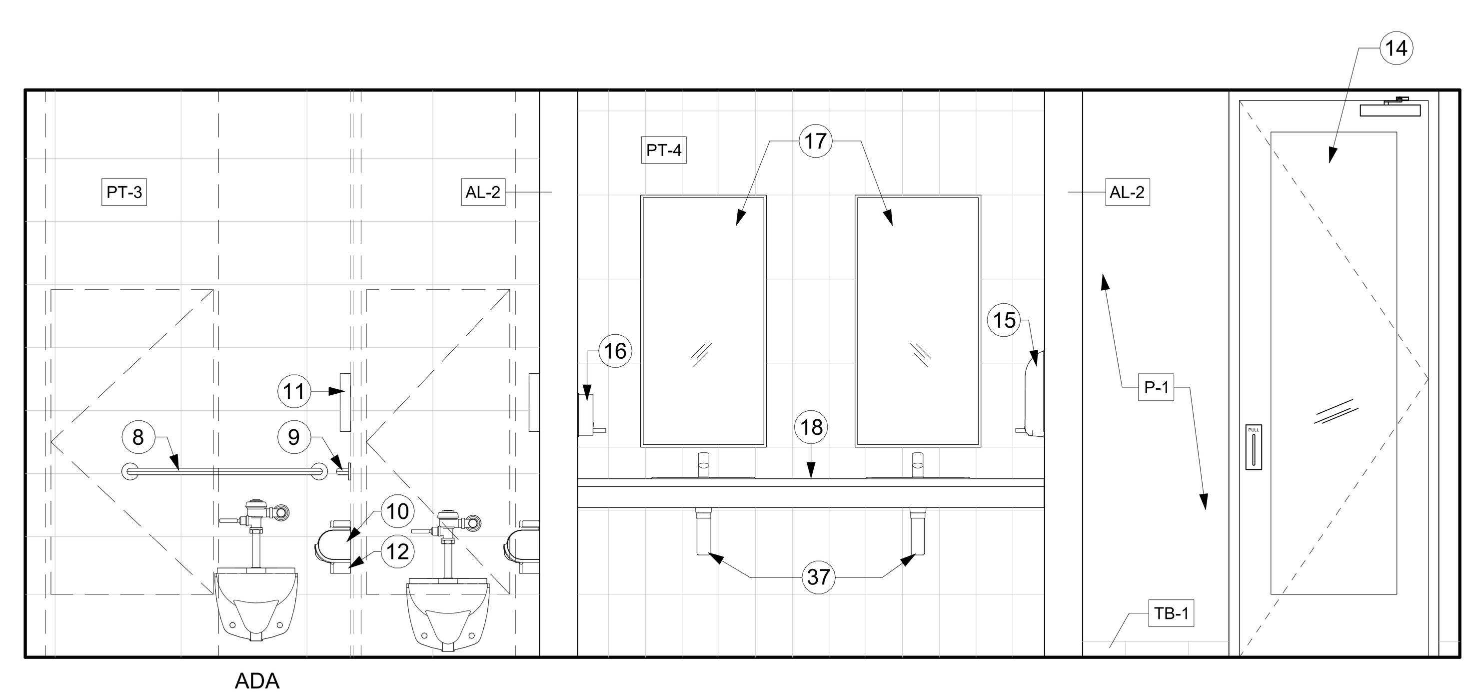

5 A412 ELEV: WOMEN RESTROOM 205 - NORTH
SCALE : 1/2" = 1'-0"

GENERAL NOTES: RESTROOMS & BREAK ROOMS

A. FINISH SCHEDULE & LEGEND REFER TO A900 & A901.
B. WALL PARTITION TYPES REFER TO A950.
C. RESTROOMS AT OFFICE BUILDING, PERIMETER WALLS (GYP & METAL STUD) TO GO TO UNDERSIDE OF DECK AND PROVIDE ACOUSTICAL BATT INSULATION.
D. COORDINATE INSTALLATION OF REQUIRED BLOCKING AND STABALIZING FOR FIXTURES.
E. THE STRUCTURAL STRENGTH OF GRAB BARS AT ACCESSIBLE WATER CLOSETS SHALL COMPLY WITH TEXAS ACCESSIBILTY STANDARDS 2012.

KEY NOTES: RESTROOMS & BREAK ROOMS

1 WALL MOUNTED TOILET ACCESSIBLE
2 WALL MOUNTED TOILET
3 WALL MOUNTED URINAL ACCESSIBLE
4 WALL MOUNTED URINAL
5 URINAL PARTITION T-10
6 PHENOLIC TOILET PARTITION T-10
7 CLOTHES HOOK T-05
8 36" GRAB BAR T-03
9 42" GRAB BAR T-04
10 TOILET PAPER DISPENSER T-01
11 SEAT COVER DISPENSER T-02
12 SANITARY NAPKIN DISPOSAL T-06
13 HI-LOW DRINKING FOUNTAIN WITH BOTTLE FILLER
14 PRIVACY GLASS
15 SEMI-RECESSED PAPER TOWEL DISPENSER T-07
16 SOAP DISPENSER T-08
17 MIRROR T-09
18 SOLID SURFACE COUNTERTOP
19 LAVATORY SINK UNDERMONT AT COUNTER
20 CANE APRON ACCESSORY
21 LINEAR SHOWER DRAIN
22 24" GRAB BAR
23 48" GRAB BAR
24 FOLDING SHOWER SEAT T-11
25 HANDHELD SHOWER SYSTEM
26 ALUMINUM CORNER GUARD FULL HEIGHT
27 ALUMINUM END CAP FULL HEIGHT
28 FURNITURE
29 BASE CABINET
30 UPPER CABINET
31 JANITOR'S SINK
32 REFRIGERATOR
33 GYPSUM BOARD FURR-DOWN HEADER
34 OFFICE EQUIPMENT
35 GYM EQUIPMENT
36 STRUCTURAL BRACE FRAME RE: STRUCTURAL
37 PIPE PROTECTION
38 PROTECTIVE COVER UNDER LAVATORY
39 HAND SINK & VANITY UNIT, WALL MOUNTED
BASIS OF DESIGN: SINK 43003L01 AVENTO & VANITY A87600 AVENTO BY VILLEROY & BOCH
40 DRINKING FOUNTAIN FILTERED WATER FILLER AT SINK
41
42 DISHWASHER: FURNISH AND INSTALL GE GDT225SGLWW

FSGROUP® ARCHITECTS
16575 Village Drive
Houston Texas 77040
713 344 1752 PH
fsdesignbuild.com

PROJECT NAME

THE STATE OF TEXAS FORT BEND COUNTY

INFORMATION TECHNOLGY BUILDING
1419 EUGENE HEIMANN CIRCLE
FORT BEND COUNTY . RICHMOND . TEXAS 77469

CONSULTANTS

PROFESSIONAL SEAL

REGISTERED ARCHITECT FAKHRUDDIN 'N' SABIR 22631 STATE OF TEXAS
5/15/2024

ISSUED FOR
ISSUED FOR PROPOSALS AND PERMIT

REVISIONS

No.	DESCRIPTION	DATE

KEY PLAN
TRUE NORTH

SHEET TITLE
ELEVATIONS RESTROOMS 205 & 206

SCALE: As indicated
DATE: 05/15/2024
PROJECT NUMBER: 2319
SHEET NUMBER: A412

FILE PATH: Autodesk Docs://FBC IT Building/FBIT_A23.rvt
PLOT DATE: 5/21/2024 5:03:35 PM

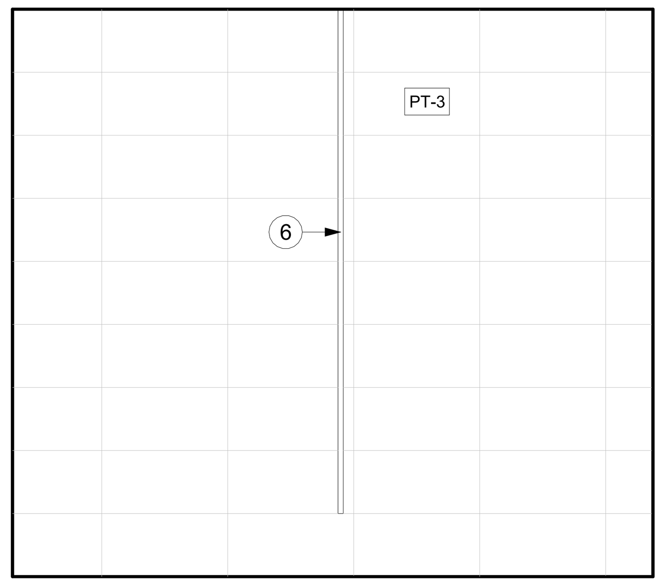

16 A413
ELEV: MEN RESTROOM 306 - WEST
SCALE : 1/2" = 1'-0"

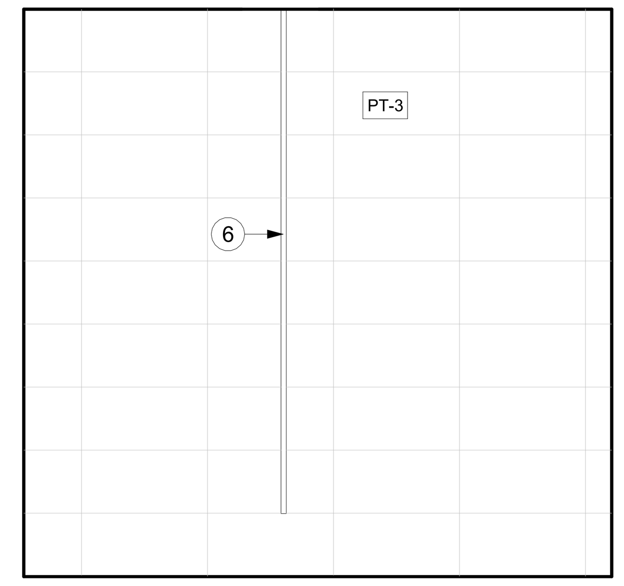

8 A413
ELEV: WOMEN RESTROOM 305 - WEST
SCALE : 1/2" = 1'-0"

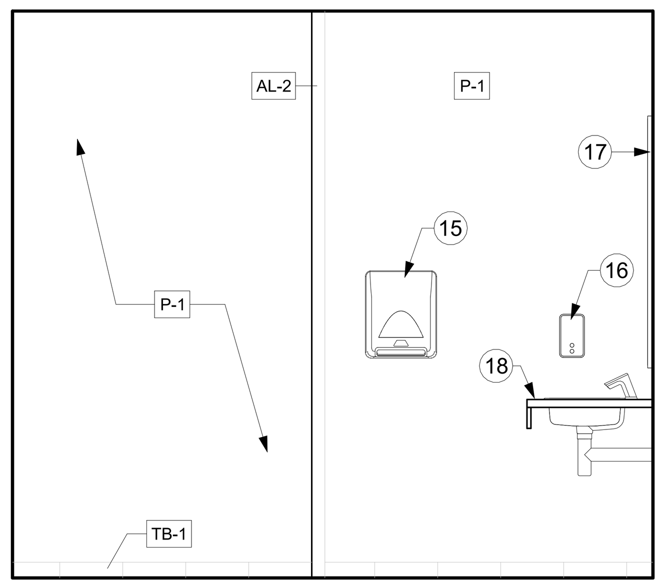

15 A413
ELEV: MEN RESTROOM 306 - EAST
SCALE : 1/2" = 1'-0"

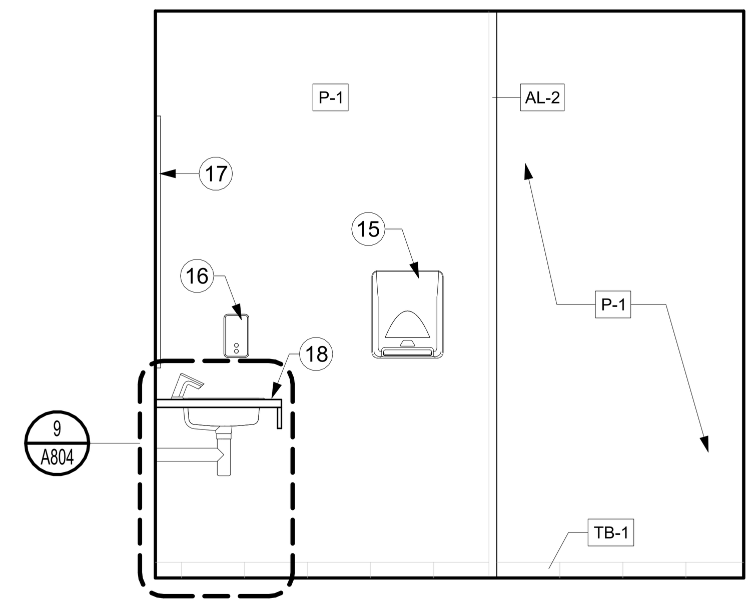

7 A413
ELEV: WOMEN RESTROOM 305 - EAST
SCALE : 1/2" = 1'-0"

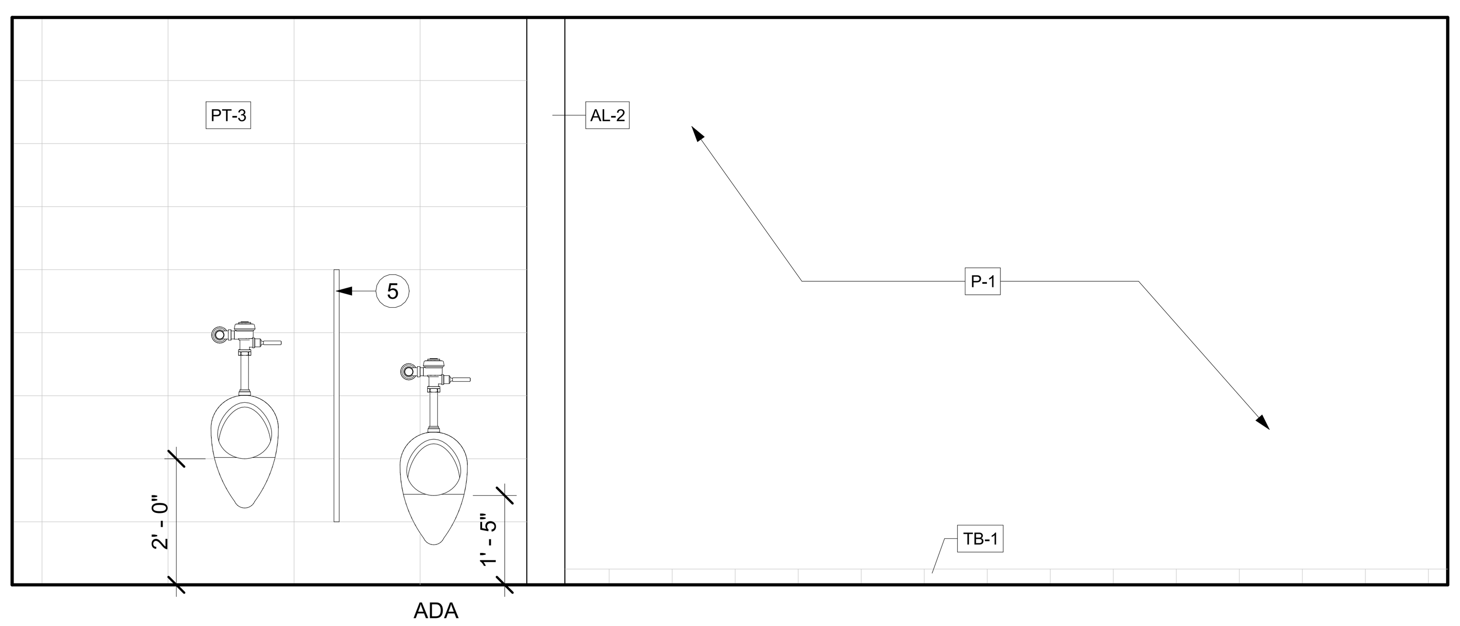

14 A413
ELEV: MEN RESTROOM 306 - NORTH
SCALE : 1/2" = 1'-0"

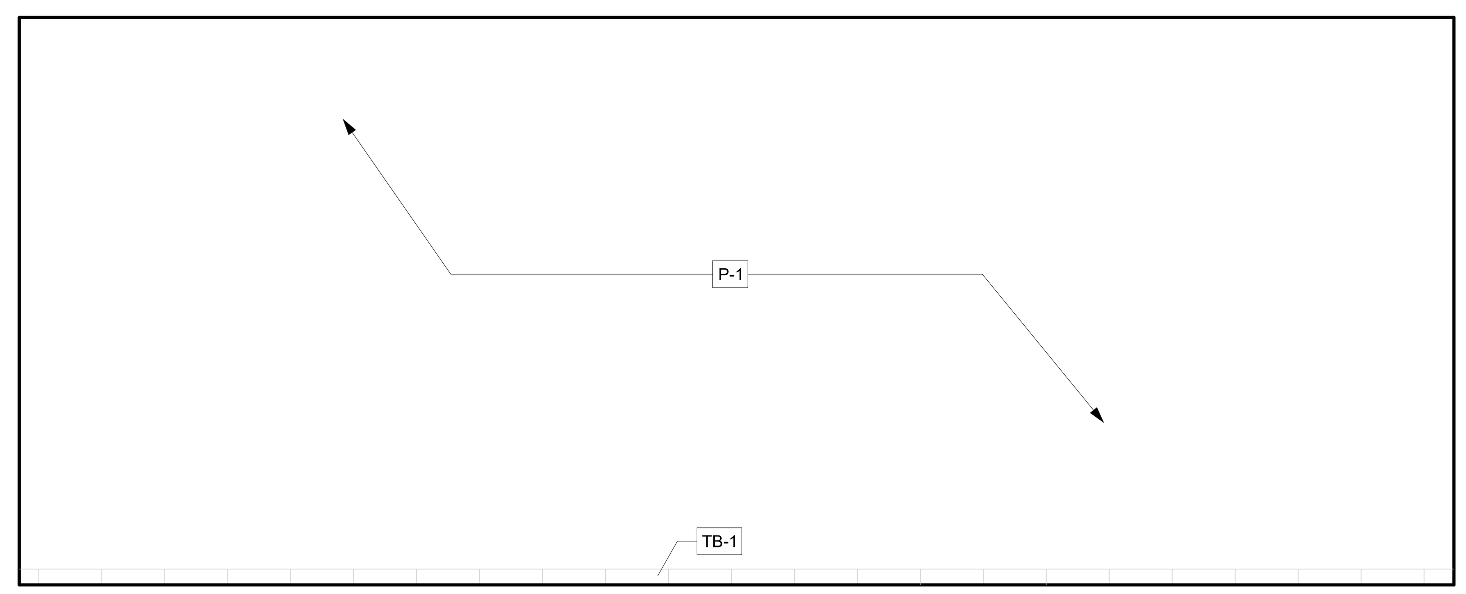

6 A413
ELEV: WOMEN RESTROOM 305 - SOUTH
SCALE : 1/2" = 1'-0"

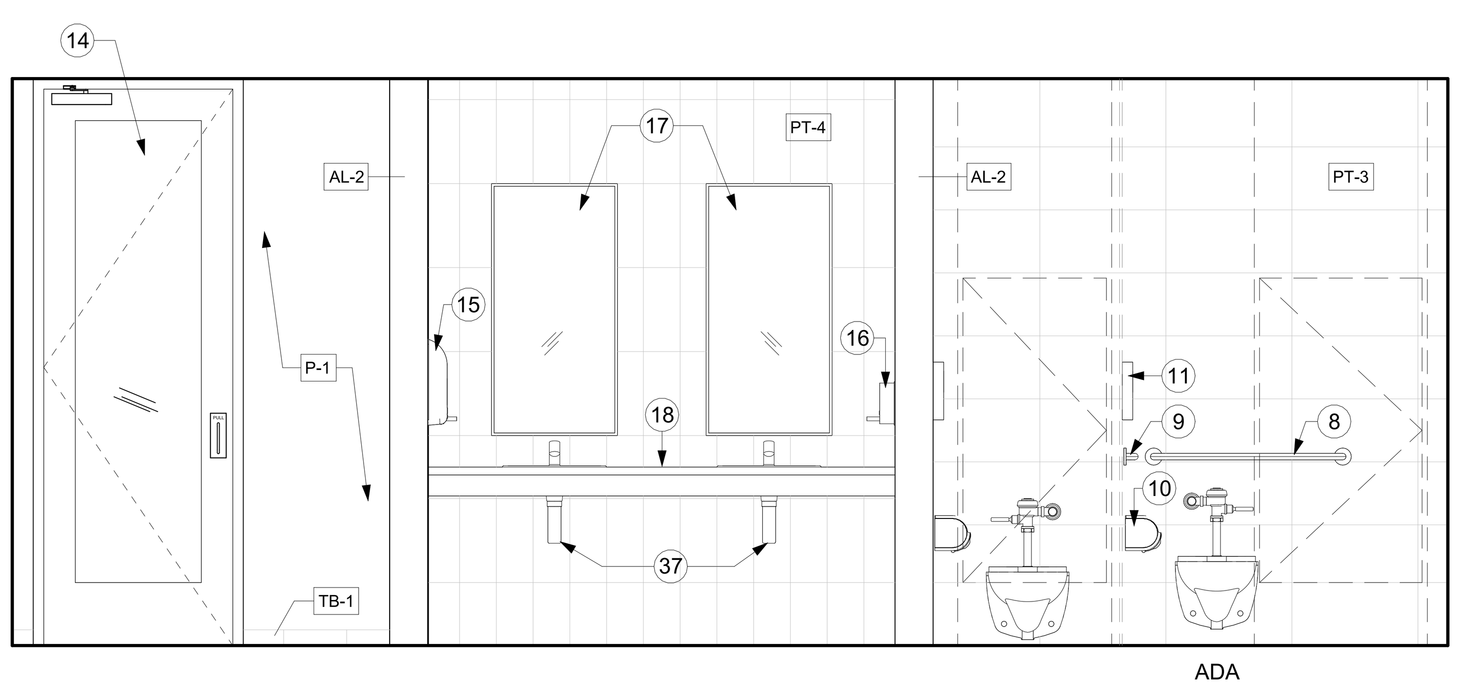

13 A413
ELEV: MEN RESTROOM 306 - SOUTH
SCALE : 1/2" = 1'-0"

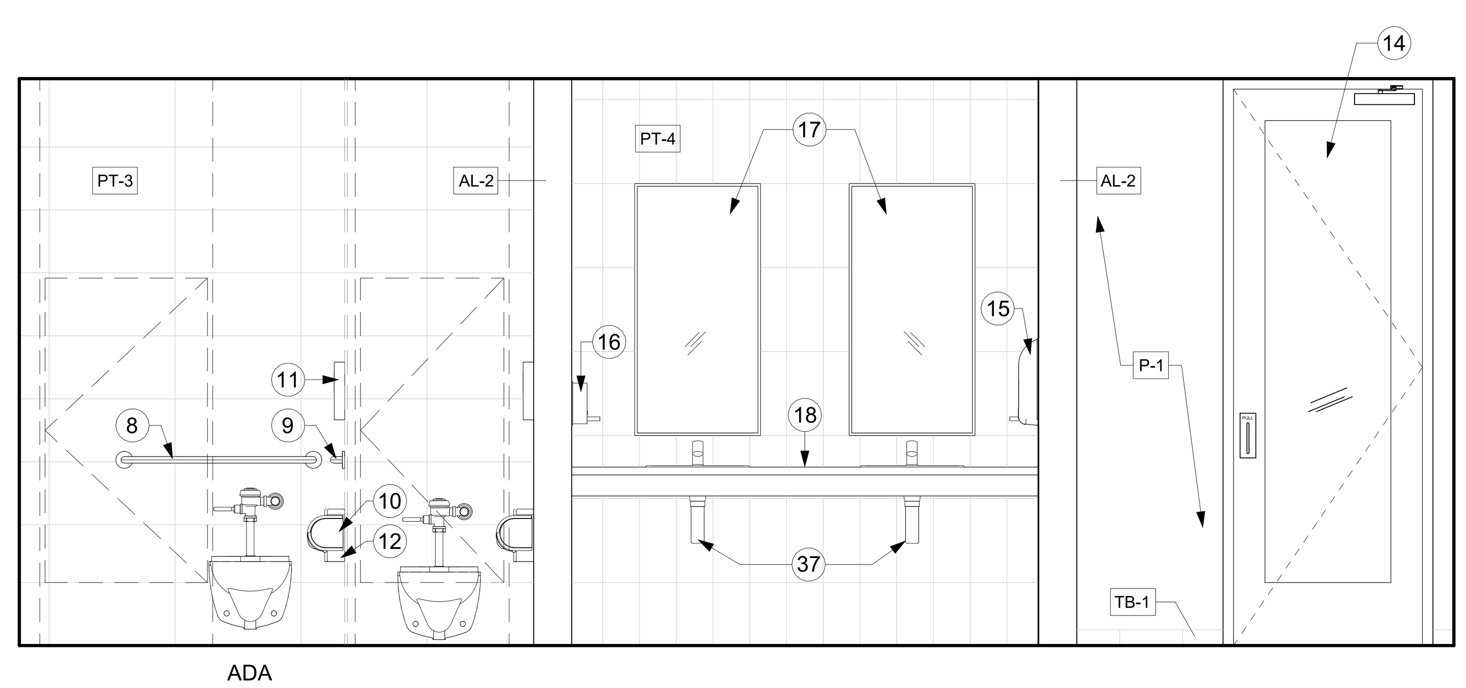

5 A413
ELEV: WOMEN RESTROOM 305 - NORTH
SCALE : 1/2" = 1'-0"

GENERAL NOTES: RESTROOMS & BREAK ROOMS

A. FINISH SCHEDULE & LEGEND REFER TO A900 & A901.

B. WALL PARTITION TYPES REFER TO A950.

C. RESTROOMS AT OFFICE BUILDING, PERIMETER WALLS (GYP & METAL STUD) TO GO TO UNDERSIDE OF DECK AND PROVIDE ACOUSTICAL BATT INSULATION.

D. COORDINATE INSTALLATION OF REQUIRED BLOCKING AND STABALIZING FOR FIXTURES.

E. THE STRUCTURAL STRENGTH OF GRAB BARS AT ACCESSIBLE WATER CLOSETS SHALL COMPLY WITH TEXAS ACCESSIBILTY STANDARDS 2012.

KEY NOTES: RESTROOMS & BREAK ROOMS

1 WALL MOUNTED TOILET ACCESSIBLE
2 WALL MOUNTED TOILET
3 WALL MOUNTED URINAL ACCESSIBLE
4 WALL MOUNTED URINAL
5 URINAL PARTITION T-10
6 PHENOLIC TOILET PARTITION T-10
7 CLOTHES HOOK T-05
8 36" GRAB BAR T-03
9 42" GRAB BAR T-04
10 TOILET PAPER DISPENSER T-01
11 SEAT COVER DISPENSER T-02
12 SANITARY NAPKIN DISPOSAL T-06
13 HI-LOW DRINKING FOUNTAIN WITH BOTTLE FILLER
14 PRIVACY GLASS
15 SEMI-RECESSED PAPER TOWEL DISPENSER T-07
16 SOAP DISPENSER T-08
17 MIRROR T-09
18 SOLID SURFACE COUNTERTOP
19 LAVATORY SINK UNDERMONT AT COUNTER
20 CANE APRON ACCESSORY
21 LINEAR SHOWER DRAIN
22 24" GRAB BAR
23 48" GRAB BAR
24 FOLDING SHOWER SEAT T-11
25 HANDHELD SHOWER SYSTEM
26 ALUMINUM CORNER GUARD FULL HEIGHT
27 ALUMINUM END CAP FULL HEIGHT
28 FURNITURE
29 BASE CABINET
30 UPPER CABINET
31 JANITOR'S SINK
32 REFRIGERATOR
33 GYPSUM BOARD FURR-DOWN HEADER
34 OFFICE EQUIPMENT
35 GYM EQUIPMENT
36 STRUCTURAL BRACE FRAME RE: STRUCTURAL
37 PIPE PROTECTION
38 PROTECTIVE COVER UNDER LAVATORY
39 HAND SINK & VANITY UNIT, WALL MOUNTED
BASIS OF DESIGN: SINK 43003L01 AVENTO & VANITY A87600 AVENTO
BY VILLEROY & BOCH
40 DRINKING FOUNTAIN FILTERED WATER FILLER AT SINK
41
42 DISHWASHER: FURNISH AND INSTALL GE GDT225SGLWW

FSGROUP®
ARCHITECTS
16575 Village Drive
Houston Texas 77040
713 344 1752 PH
fsdesignbuild.com

PROJECT NAME

THE STATE OF TEXAS
FORT BEND COUNTY

INFORMATION TECHNOLGY BUILDING
1419 EUGENE HEIMANN CIRCLE
FORT BEND COUNTY . RICHMOND . TEXAS 77469

CONSULTANTS

PROFESSIONAL SEAL

REGISTERED ARCHITECT
FAKHRUDDIN N. SABIR
22631
STATE OF TEXAS
5/15/2024

ISSUED FOR
ISSUED FOR PROPOSALS AND PERMIT

REVISIONS

No.	DESCRIPTION	DATE

KEY PLAN

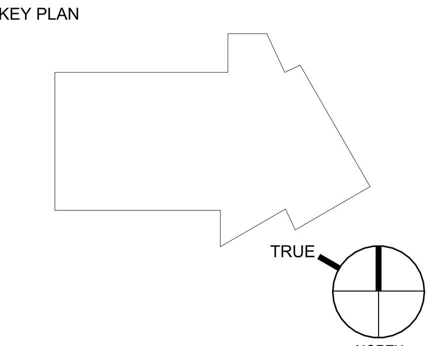

SHEET TITLE
ELEVATIONS RESTROOMS 305 & 306

SCALE: As indicated
DATE: 05/15/2024
PROJECT NUMBER: 2319
SHEET NUMBER: A413

PLOT DATE: 5/21/2024 5:03:53 PM
FILE PATH: Autodesk Docs://FBC IT Building/FBIT_A23.rvt

GENERAL NOTES: RESTROOMS & BREAK ROOMS

A. FINISH SCHEDULE & LEGEND REFER TO A900 & A901.

B. WALL PARTITION TYPES REFER TO A950.

C. RESTROOMS AT OFFICE BUILDING, PERIMETER WALLS (GYP & METAL STUD) TO GO TO UNDERSIDE OF DECK AND PROVIDE ACOUSTICAL BATT INSULATION.

D. COORDINATE INSTALLATION OF REQUIRED BLOCKING AND STABALIZING FOR FIXTURES.

E. THE STRUCTURAL STRENGTH OF GRAB BARS AT ACCESSIBLE WATER CLOSETS SHALL COMPLY WITH TEXAS ACCESSIBILTY STANDARDS 2012.

KEY NOTES: RESTROOMS & BREAK ROOMS

1 WALL MOUNTED TOILET ACCESSIBLE
2 WALL MOUNTED TOILET
3 WALL MOUNTED URINAL ACCESSIBLE
4 WALL MOUNTED URINAL
5 URINAL PARTITION T-10
6 PHENOLIC TOILET PARTITION T-10
7 CLOTHES HOOK T-05
8 36" GRAB BAR T-03
9 42" GRAB BAR T-04
10 TOILET PAPER DISPENSER T-01
11 SEAT COVER DISPENSER T-02
12 SANITARY NAPKIN DISPOSAL T-06
13 HI-LOW DRINKING FOUNTAIN WITH BOTTLE FILLER
14 PRIVACY GLASS
15 SEMI-RECESSED PAPER TOWEL DISPENSER T-07
16 SOAP DISPENSER T-08
17 MIRROR T-09
18 SOLID SURFACE COUNTERTOP
19 LAVATORY SINK UNDERMONT AT COUNTER
20 CANE APRON ACCESSORY
21 LINEAR SHOWER DRAIN
22 24" GRAB BAR
23 48" GRAB BAR
24 FOLDING SHOWER SEAT T-11
25 HANDHELD SHOWER SYSTEM
26 ALUMINUM CORNER GUARD FULL HEIGHT
27 ALUMINUM END CAP FULL HEIGHT
28 FURNITURE
29 BASE CABINET
30 UPPER CABINET
31 JANITOR'S SINK
32 REFRIGERATOR
33 GYPSUM BOARD FURR-DOWN HEADER
34 OFFICE EQUIPMENT
35 GYM EQUIPMENT
36 STRUCTURAL BRACE FRAME RE: STRUCTURAL
37 PIPE PROTECTION
38 PROTECTIVE COVER UNDER LAVATORY
39 HAND SINK & VANITY UNIT, WALL MOUNTED BASIS OF DESIGN: SINK 43003L01 AVENTO & VANITY A87600 AVENTO BY VILLEROY & BOCH
40 DRINKING FOUNTAIN FILTERED WATER FILLER AT SINK
41
42 DISHWASHER: FURNISH AND INSTALL GE GDT225SGLWW

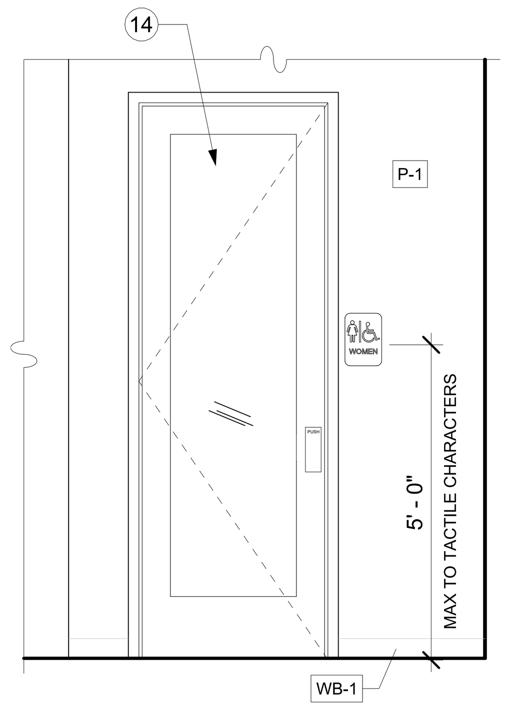

12 A414 ELEV: RR SIGN WOMEN 205/305
SCALE : 1/2" = 1'-0"

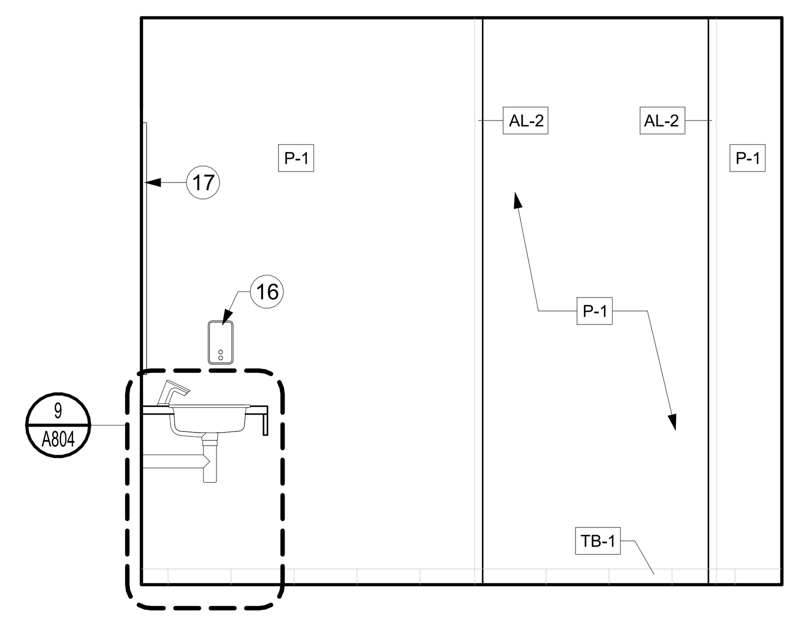

8 A414 ELEV: MEN RR 106 - WEST WING WALLS
SCALE : 1/2" = 1'-0"

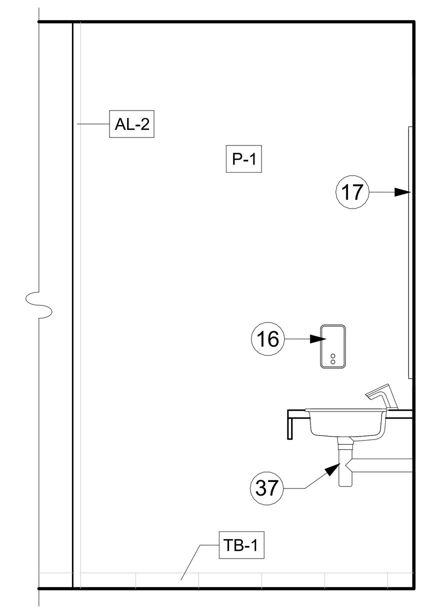

4 A414 WOMEN RR 105 - WEST WING WALL
SCALE : 1/2" = 1'-0"

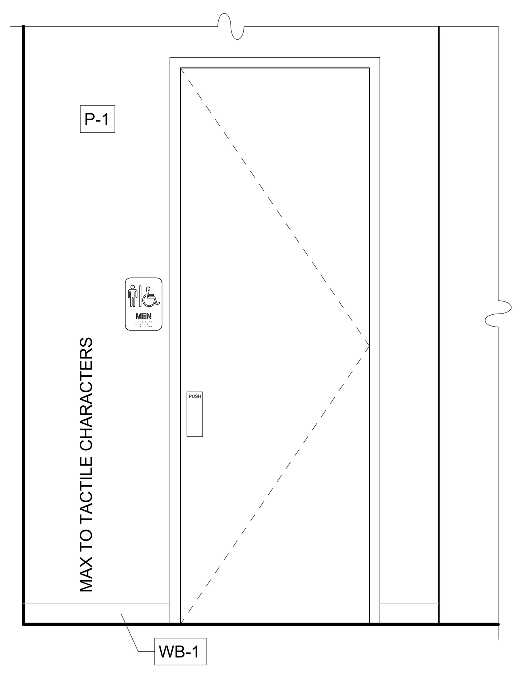

11 A414 ELEV: RR SIGN MEN 106
SCALE : 1/2" = 1'-0"

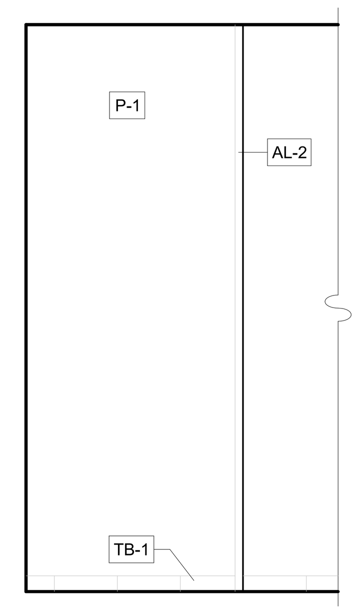

7 A414 MEN RR 106 - WEST WING WALL ENTRY
SCALE : 1/2" = 1'-0"

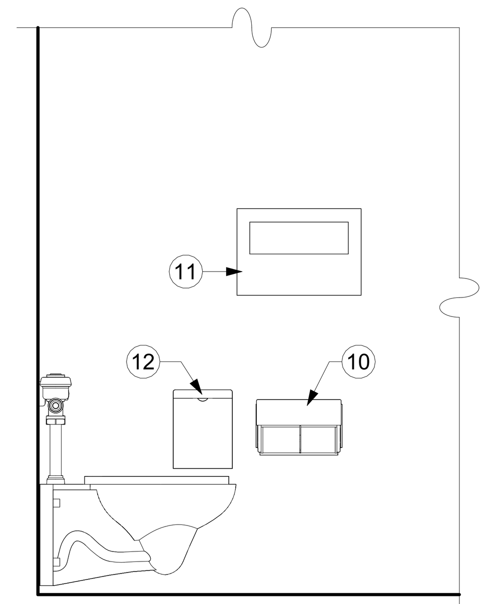

3 A414 MNTG LOCATIONS - SIDE
SCALE : 3/4" = 1'-0"

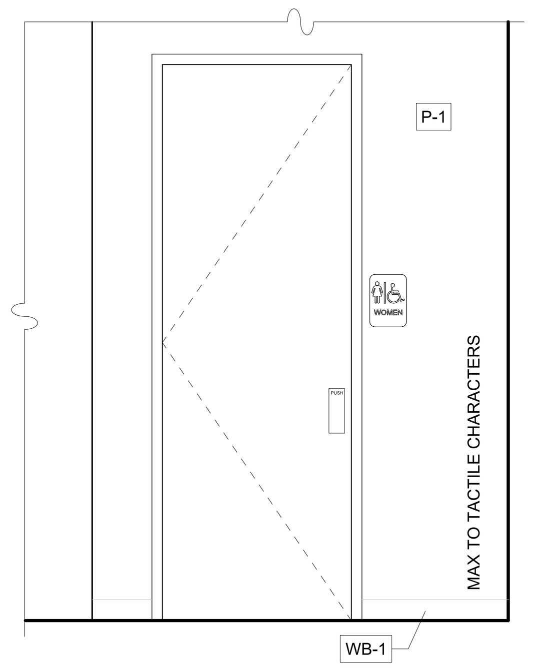

10 A414 ELEV: RR SIGN WOMEN 105
SCALE : 1/2" = 1'-0"

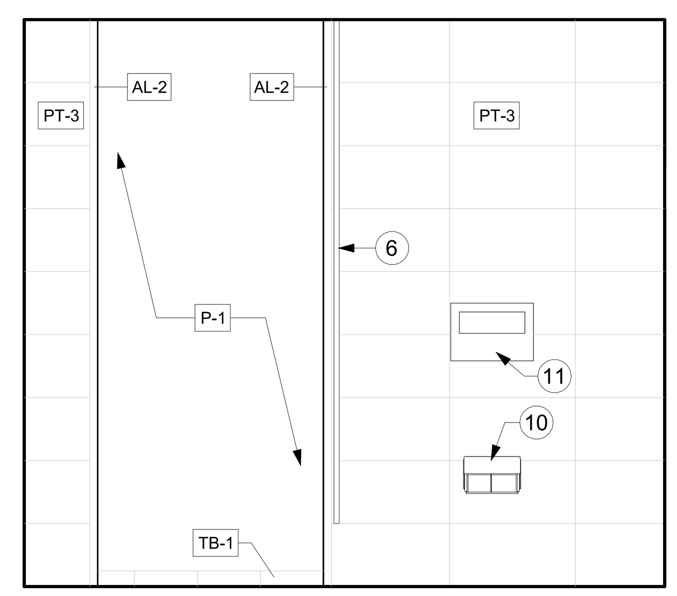

6 A414 ELEV: MEN RR 106 - EAST WING WALLS
SCALE : 1/2" = 1'-0"

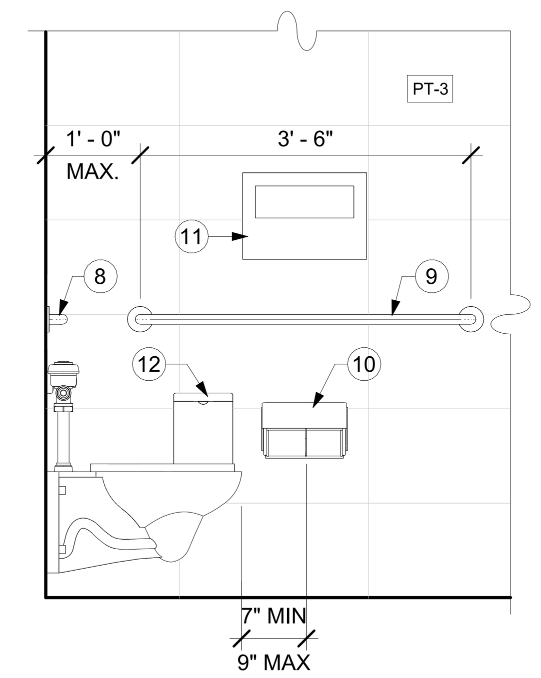

2 A414 MNTG LOCATIONS - SIDE WALL
SCALE : 3/4" = 1'-0"

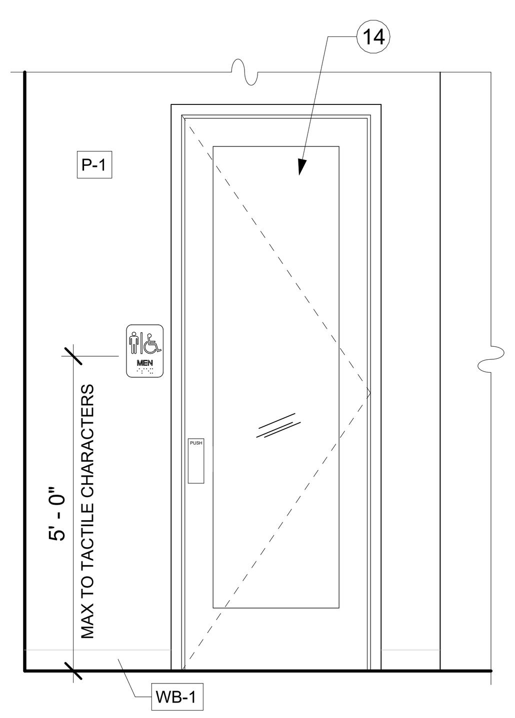

13 A414 ELEV: RR SIGN MEN 206/306
SCALE : 1/2" = 1'-0"

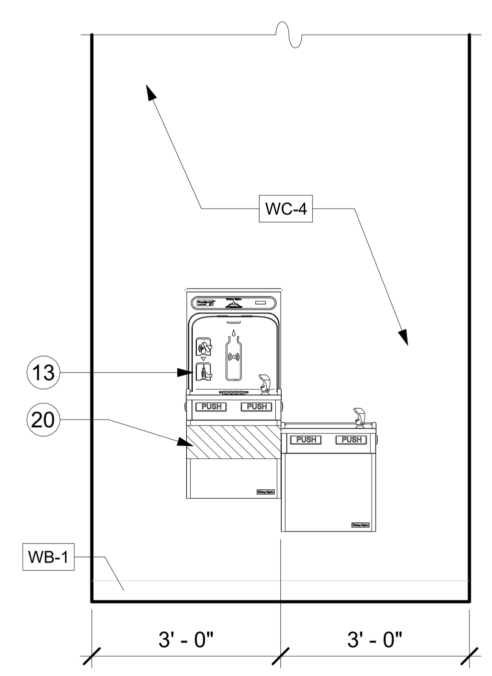

9 A414 DRINKING FOUNTAIN 105/106, 205/206, 305/306
SCALE : 1/2" = 1'-0"

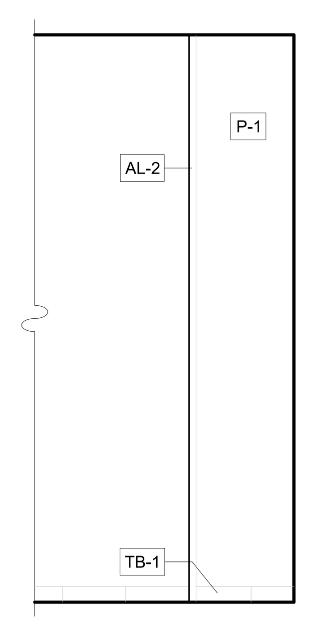

5 A414 WOMEN RR 105 - WEST WING WALL ENTRY
SCALE : 1/2" = 1'-0"

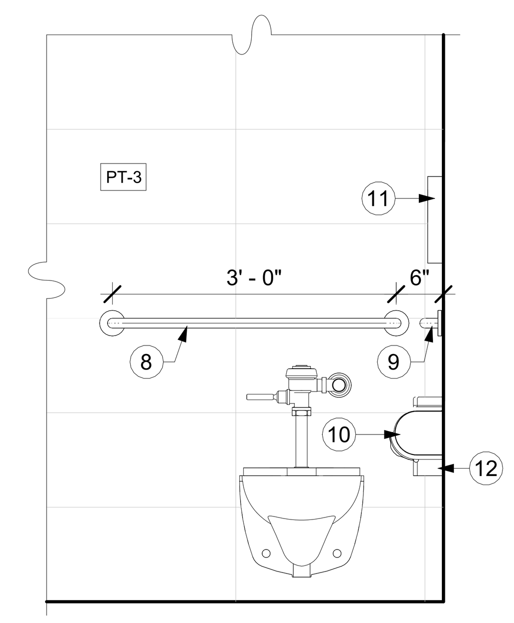

1 A414 MNTG LOCATIONS - BACK WALL
SCALE : 3/4" = 1'-0"

FSGROUP® ARCHITECTS
16575 Village Drive
Houston Texas 77040
713 344 1752 PH
fsdesignbuild.com

PROJECT NAME

THE STATE OF TEXAS FORT BEND COUNTY

INFORMATION TECHNOLGY BUILDING
1419 EUGENE HEIMANN CIRCLE
FORT BEND COUNTY . RICHMOND . TEXAS 77469

CONSULTANTS

PROFESSIONAL SEAL

REGISTERED ARCHITECT FAKHRUDDIN N. SABIR 22631 STATE OF TEXAS
5/15/2024

ISSUED FOR
ISSUED FOR PROPOSALS AND PERMIT

REVISIONS

No.	DESCRIPTION	DATE

KEY PLAN

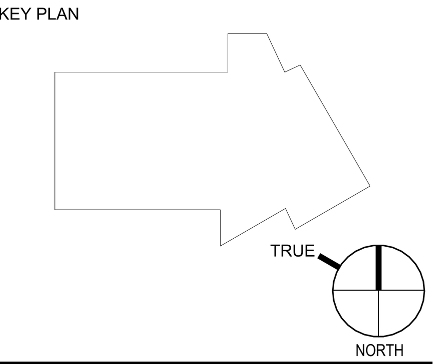

SHEET TITLE
ELEVATIONS RESTROOMS

SCALE As indicated
DATE 05/15/2024
PROJECT NUMBER 2319
SHEET NUMBER
A414

FILE PATH: Autodesk Docs://FBC IT Building/FBIT_A23.rvt
PLOT DATE: 5/21/2024 5:04:19 PM

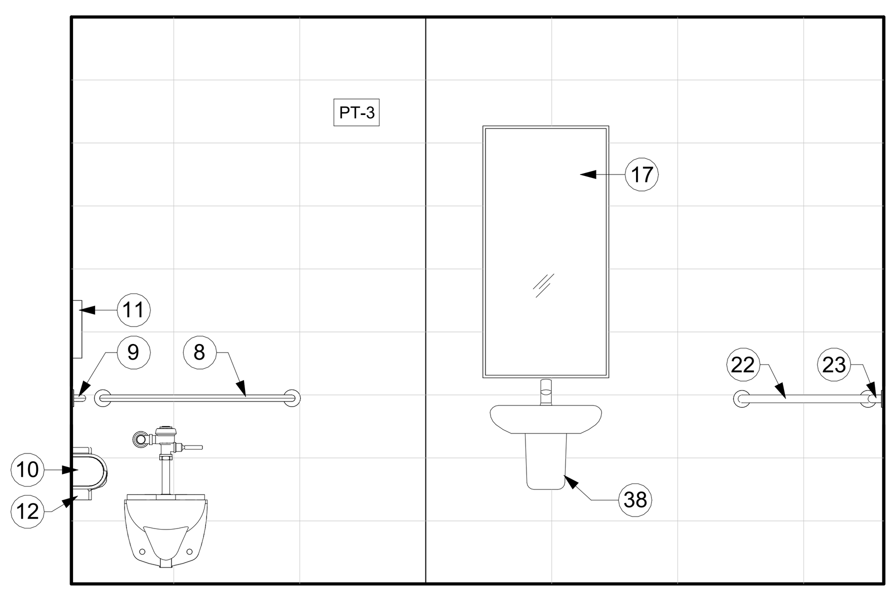

16 A415 ELEV: SHOWER 132 - WEST
SCALE : 1/2" = 1'-0"

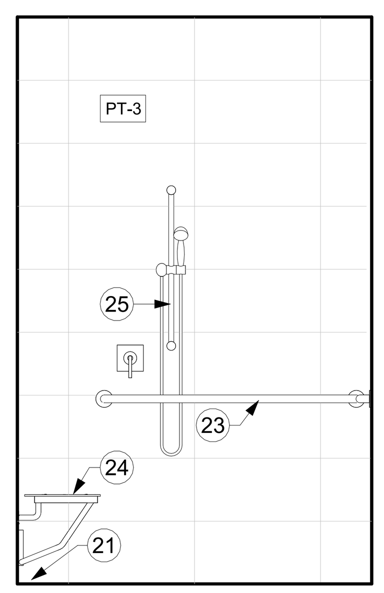

12 A415 ELEV: SHOWER 131 - WEST
SCALE : 1/2" = 1'-0"

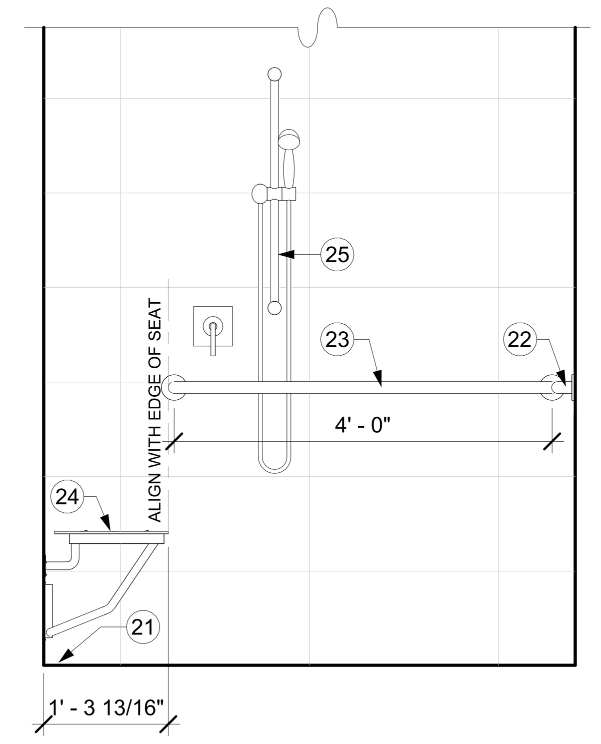

8 A415 SHOWER FIXTURE LOCATIONS - BACK WALL
SCALE : 3/4" = 1'-0"

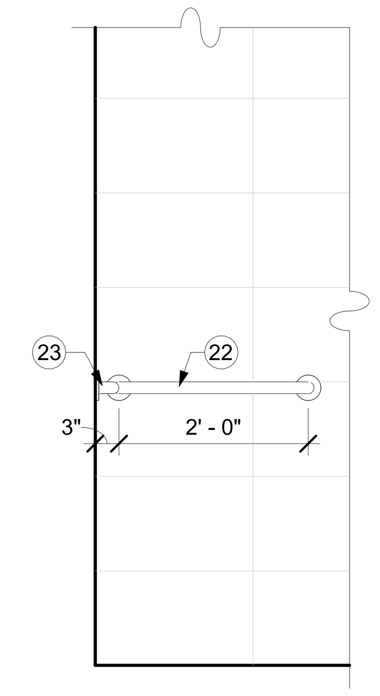

4 A415 SHOWER FIXTURE LOCATIONS - SIDE WALL
SCALE : 3/4" = 1'-0"

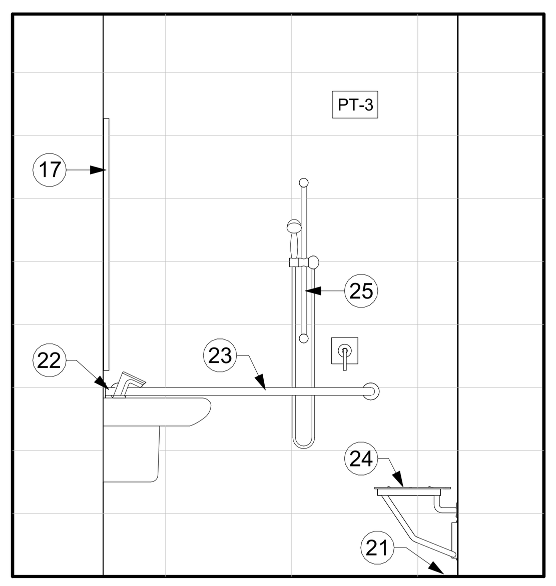

15 A415 ELEV: SHOWER 132 - NORTH
SCALE : 1/2" = 1'-0"

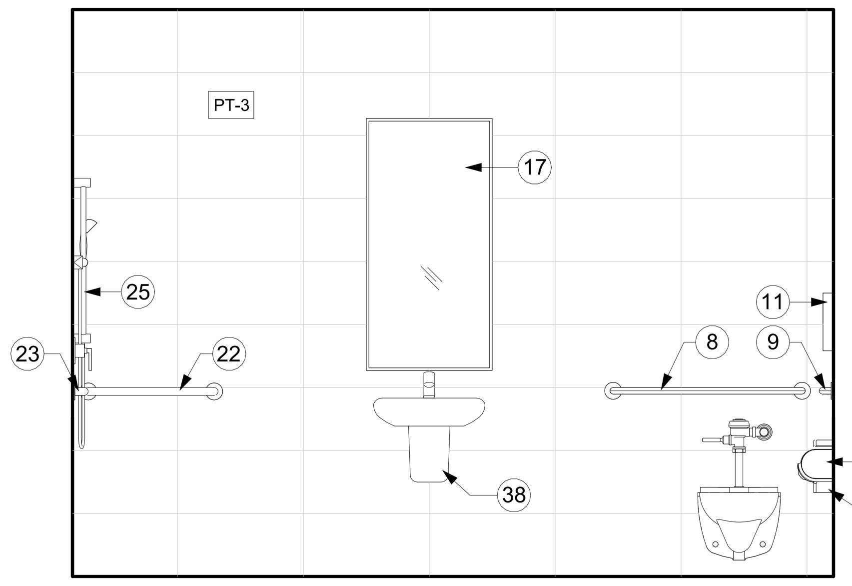

11 A415 ELEV: SHOWER 131 - NORTH
SCALE : 1/2" = 1'-0"

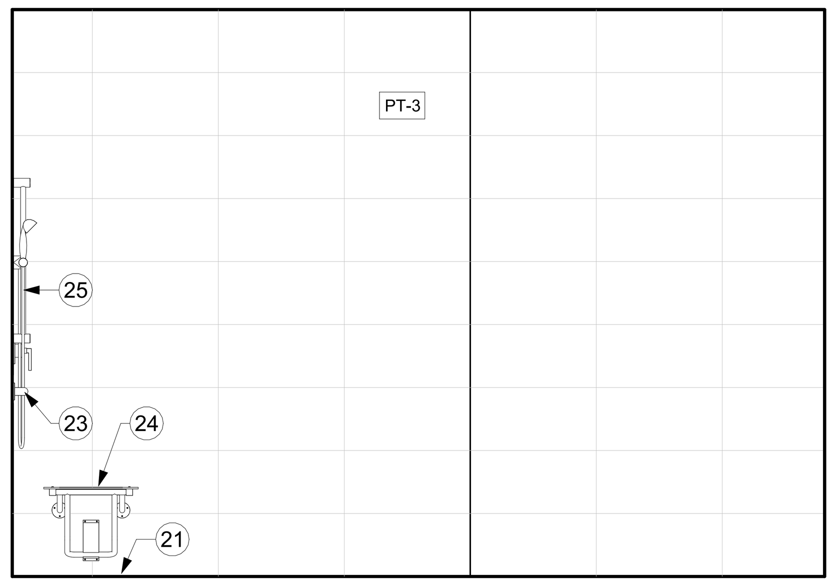

14 A415 ELEV: SHOWER 132 - EAST
SCALE : 1/2" = 1'-0"

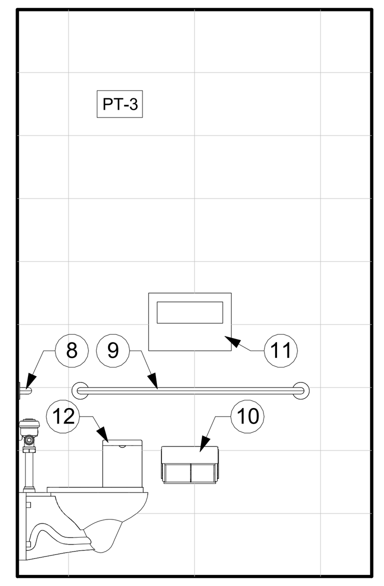

10 A415 ELEV: SHOWER 131 - EAST
SCALE : 1/2" = 1'-0"

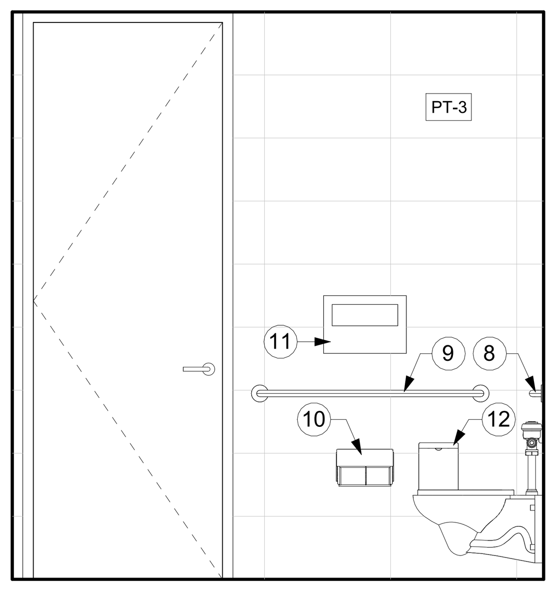

13 A415 ELEV: SHOWER 132 - SOUTH
SCALE : 1/2" = 1'-0"

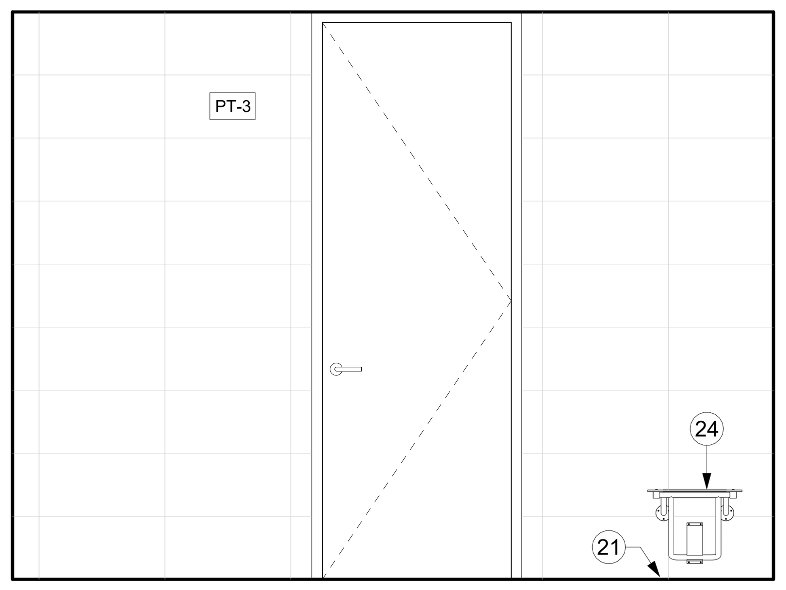

9 A415 ELEV: SHOWER 131 - SOUTH
SCALE : 1/2" = 1'-0"

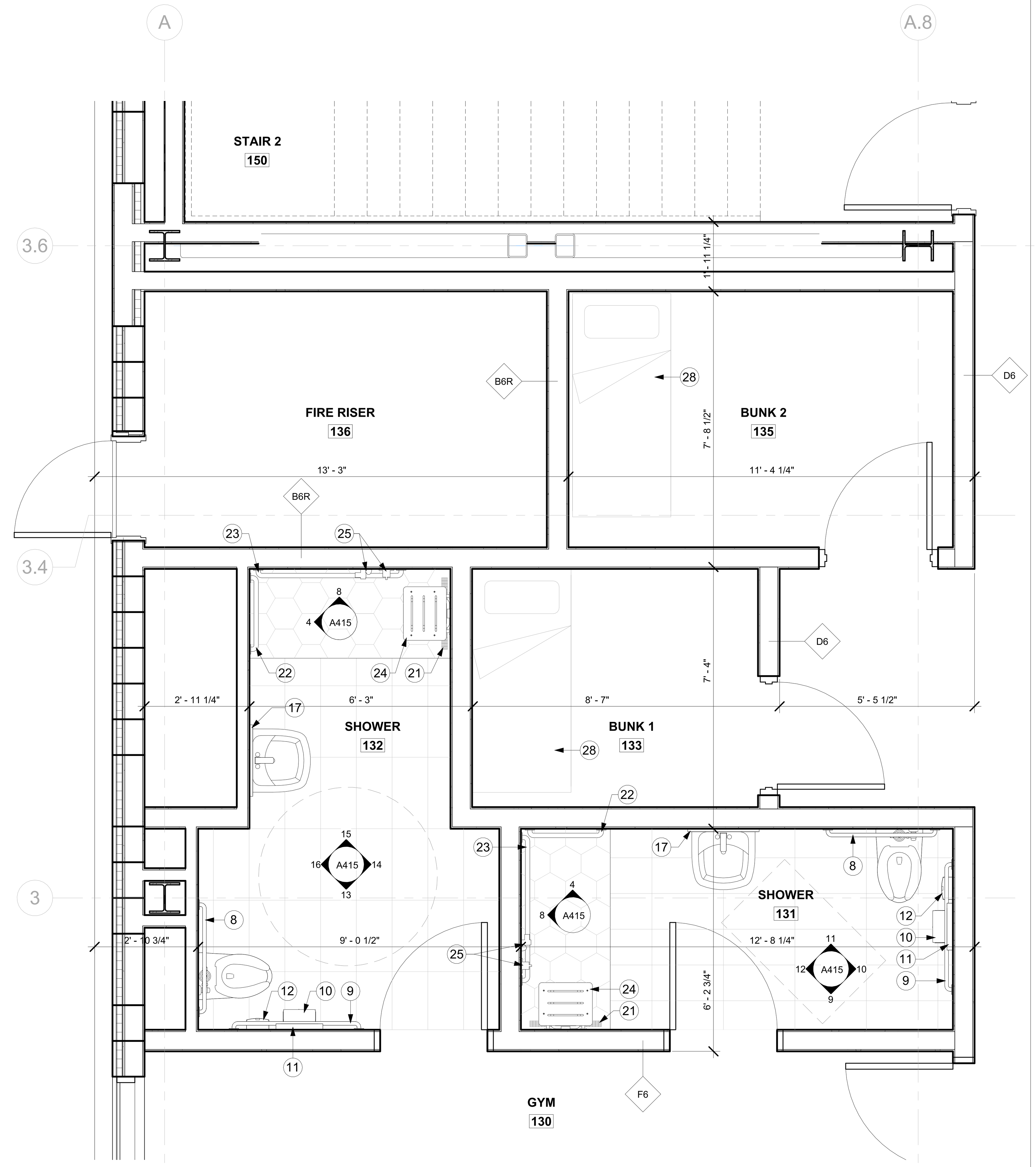

5 A415 ENLG PLAN: SHOWERS 131 & 132
SCALE : 1/2" = 1'-0"

GENERAL NOTES: RESTROOMS & BREAK ROOMS

A. FINISH SCHEDULE & LEGEND REFER TO A900 & A901.

B. WALL PARTITION TYPES REFER TO A950.

C. RESTROOMS AT OFFICE BUILDING, PERIMETER WALLS (GYP & METAL STUD) TO GO TO UNDERSIDE OF DECK AND PROVIDE ACOUSTICAL BATT INSULATION.

D. COORDINATE INSTALLATION OF REQUIRED BLOCKING AND STABALIZING FOR FIXTURES.

E. THE STRUCTURAL STRENGTH OF GRAB BARS AT ACCESSIBLE WATER CLOSETS SHALL COMPLY WITH TEXAS ACCESSIBILTY STANDARDS 2012.

KEY NOTES: RESTROOMS & BREAK ROOMS

1 WALL MOUNTED TOILET ACCESSIBLE
2 WALL MOUNTED TOILET
3 WALL MOUNTED URINAL ACCESSIBLE
4 WALL MOUNTED URINAL
5 URINAL PARTITION T-10
6 PHENOLIC TOILET PARTITION T-10
7 CLOTHES HOOK T-05
8 36" GRAB BAR T-03
9 42" GRAB BAR T-04
10 TOILET PAPER DISPENSER T-01
11 SEAT COVER DISPENSER T-02
12 SANITARY NAPKIN DISPOSAL T-06
13 HI-LOW DRINKING FOUNTAIN WITH BOTTLE FILLER
14 PRIVACY GLASS
15 SEMI-RECESSED PAPER TOWEL DISPENSER T-07
16 SOAP DISPENSER T-08
17 MIRROR T-09
18 SOLID SURFACE COUNTERTOP
19 LAVATORY SINK UNDERMONT AT COUNTER
20 CANE APRON ACCESSORY
21 LINEAR SHOWER DRAIN
22 24" GRAB BAR
23 48" GRAB BAR
24 FOLDING SHOWER SEAT T-11
25 HANDHELD SHOWER SYSTEM
26 ALUMINUM CORNER GUARD FULL HEIGHT
27 ALUMINUM END CAP FULL HEIGHT
28 FURNITURE
29 BASE CABINET
30 UPPER CABINET
31 JANITOR'S SINK
32 REFRIGERATOR
33 GYPSUM BOARD FURR-DOWN HEADER
34 OFFICE EQUIPMENT
35 GYM EQUIPMENT
36 STRUCTURAL BRACE FRAME RE: STRUCTURAL
37 PIPE PROTECTION
38 PROTECTIVE COVER UNDER LAVATORY
39 HAND SINK & VANITY UNIT, WALL MOUNTED BASIS OF DESIGN: SINK 43003L01 AVENTO & VANITY A87600 AVENTO BY VILLEROY & BOCH
40 DRINKING FOUNTAIN FILTERED WATER FILLER AT SINK
41
42 DISHWASHER: FURNISH AND INSTALL GE GDT225SGLWW

FSGROUP ARCHITECTS
16575 Village Drive
Houston Texas 77040
713 344 1752 PH
fsdesignbuild.com

PROJECT NAME

INFORMATION TECHNOLGY BUILDING
1419 EUGENE HEIMANN CIRCLE
FORT BEND COUNTY . RICHMOND . TEXAS 77469

CONSULTANTS

PROFESSIONAL SEAL

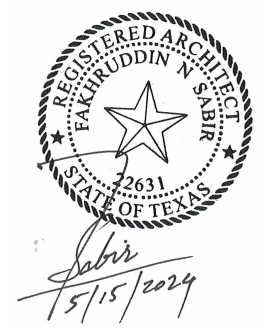

ISSUED FOR
ISSUED FOR PROPOSALS AND PERMIT

REVISIONS

No.	DESCRIPTION	DATE

KEY PLAN

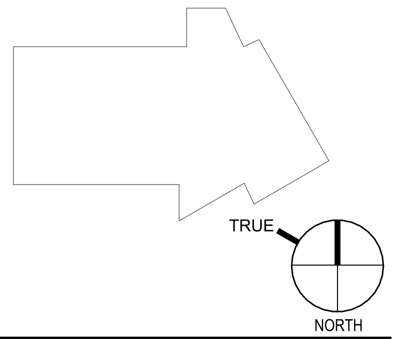

SHEET TITLE
ENLARGED PLAN
SHOWERS 131 & 132

SCALE As indicated
DATE 05/15/2024
PROJECT NUMBER 2319
SHEET NUMBER
A415

FILE PATH: Autodesk Docs://FBC IT Building/FBIT_A23.rvt
PLOT DATE: 5/21/2024 5:04:41 PM

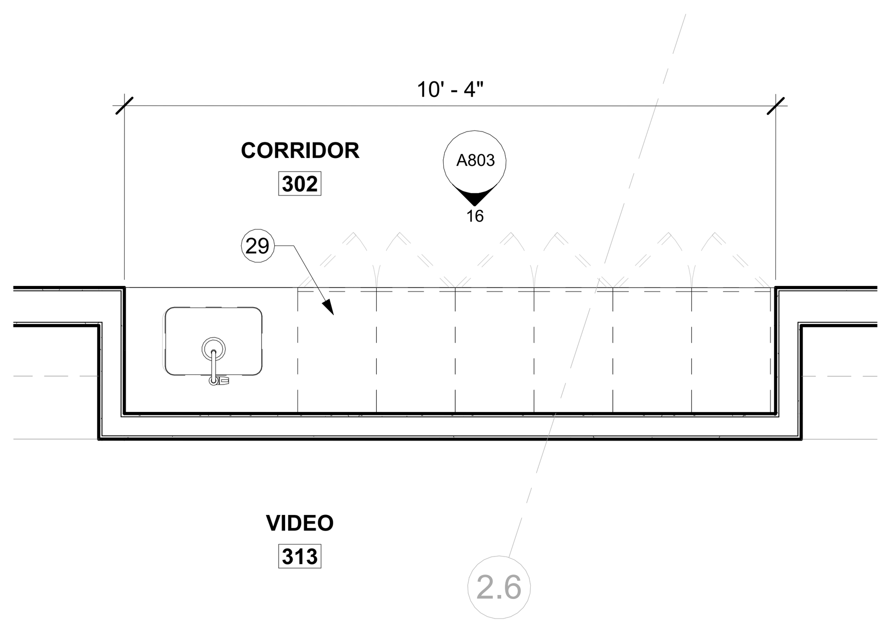

9
A416
ENLG PLAN: COFFEE BAR 302
SCALE : 1/2" = 1'-0"

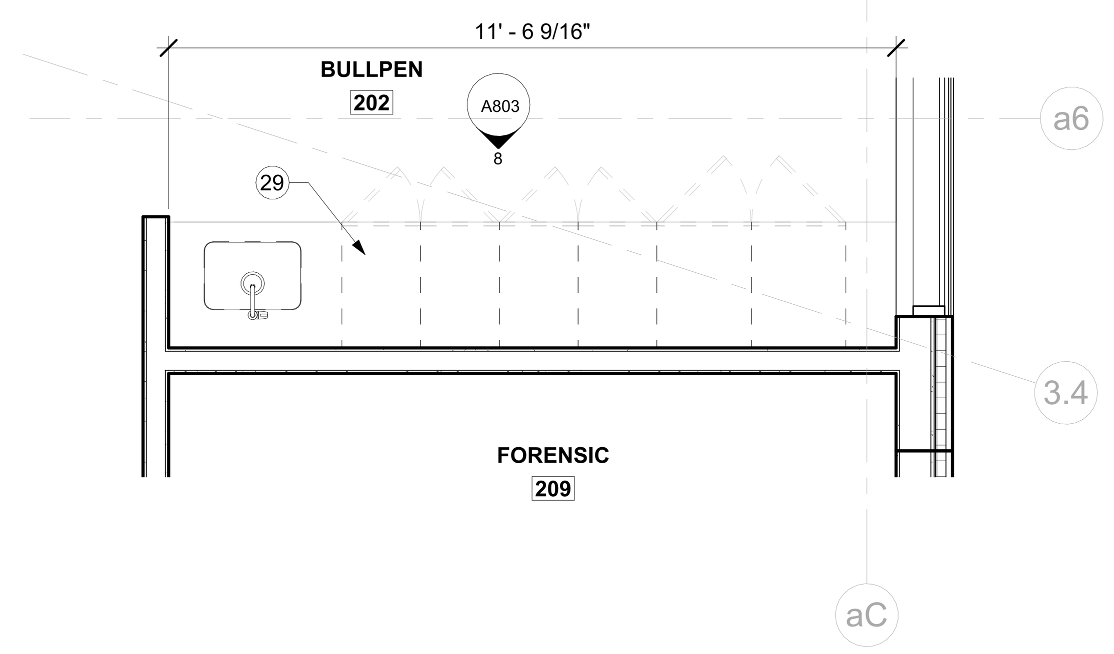

6
A416
ENLG PLAN: COFFEE BAR 202
SCALE : 1/2" = 1'-0"

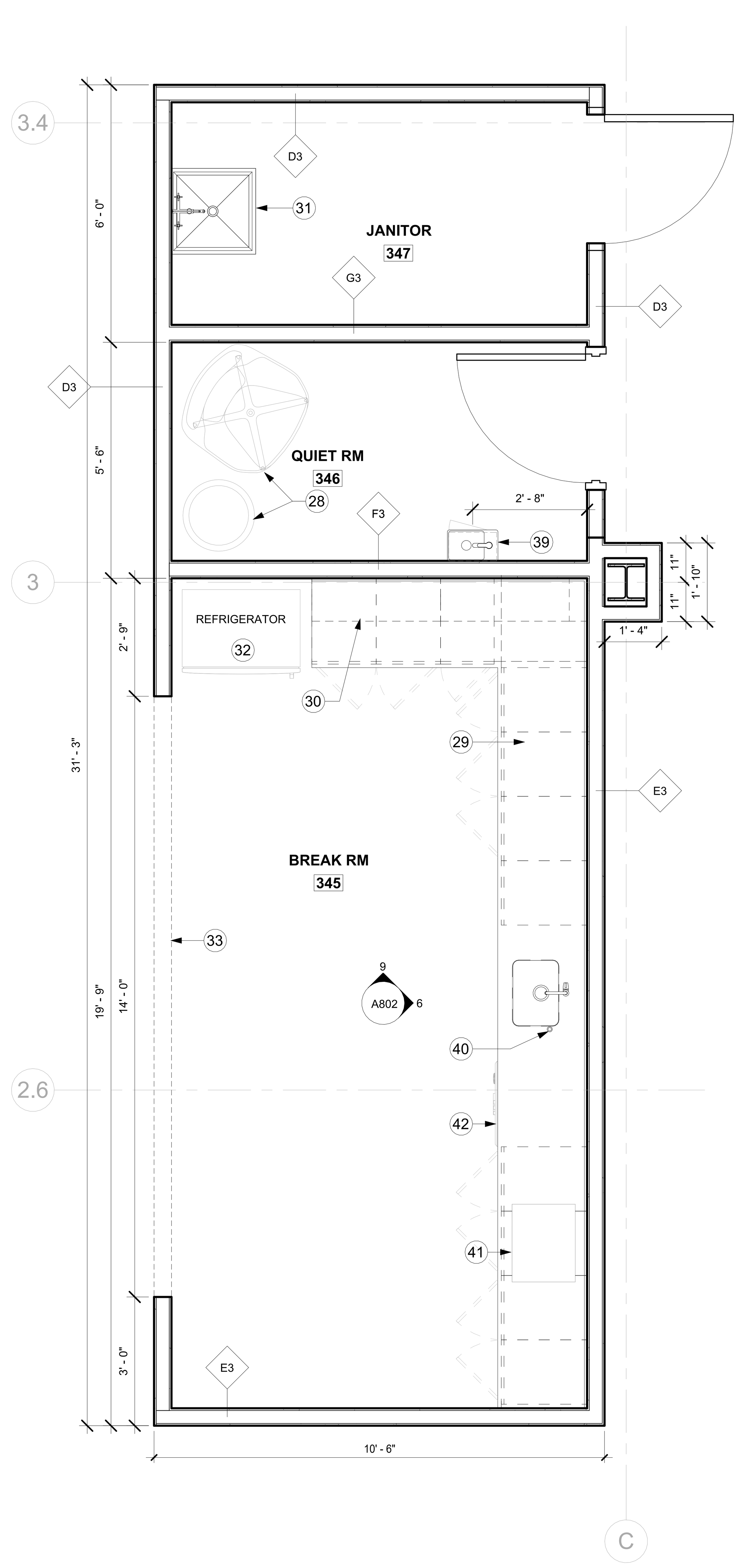

7
A416
ENLG PLAN: BREAK ROOM 345
SCALE : 1/2" = 1'-0"

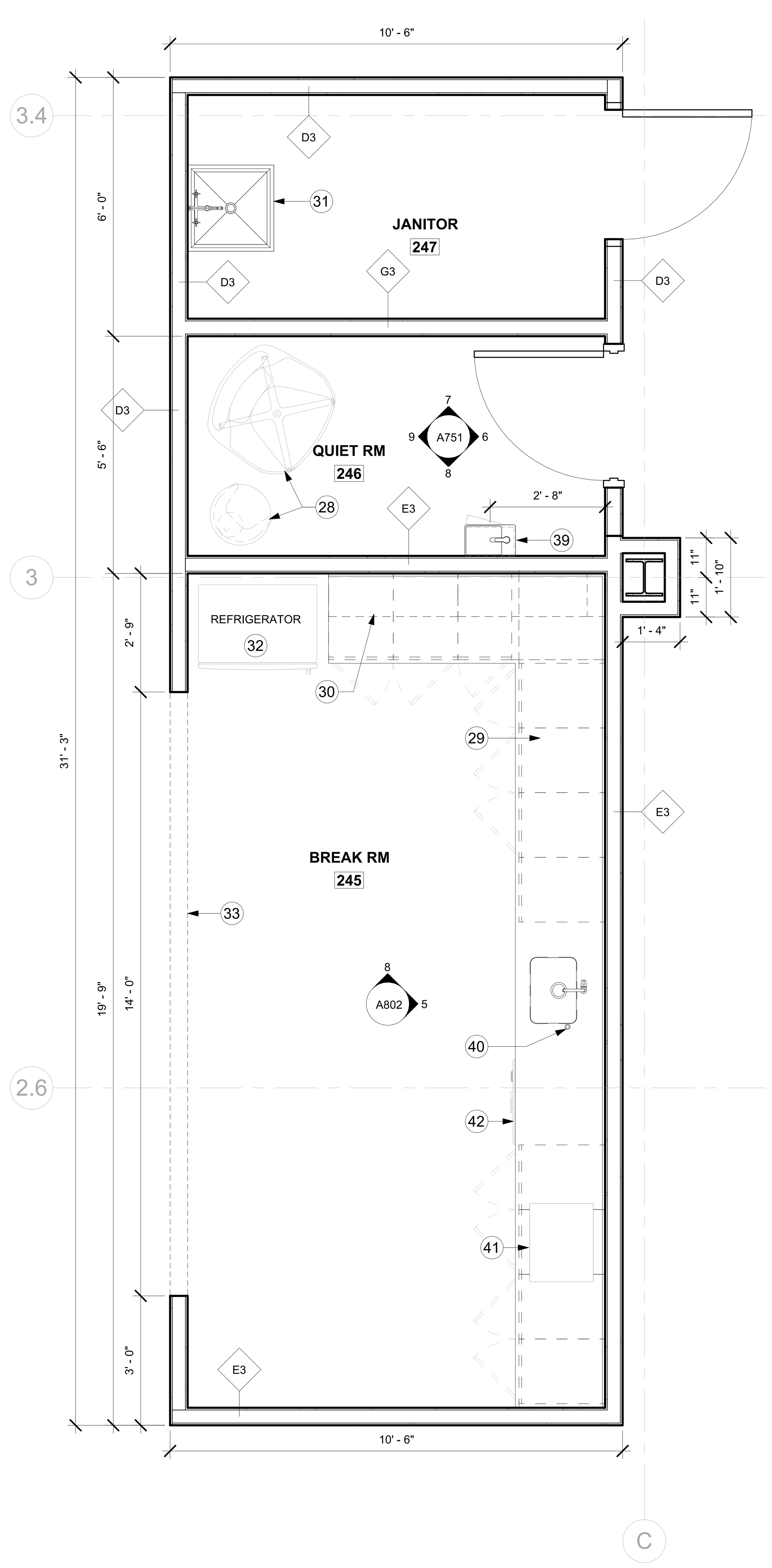

4
A416
ENLG PLAN: BREAK ROOM 245
SCALE : 1/2" = 1'-0"

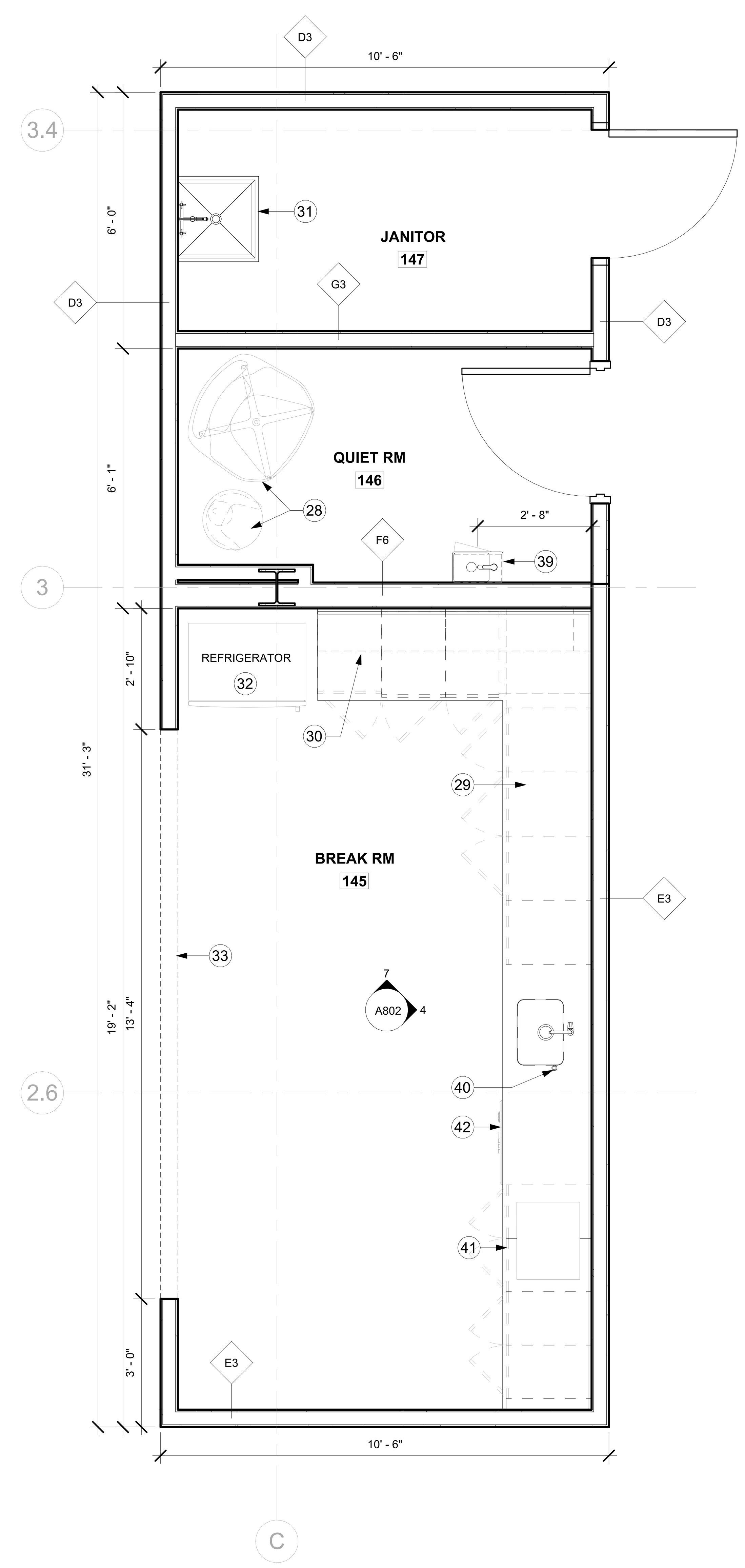

1
A416
ENLG PLAN: BREAK ROOM 145
SCALE : 1/2" = 1'-0"

GENERAL NOTES: RESTROOMS & BREAK ROOMS

A. FINISH SCHEDULE & LEGEND REFER TO A900 & A901.

B. WALL PARTITION TYPES REFER TO A950.

C. RESTROOMS AT OFFICE BUILDING, PERIMETER WALLS (GYP & METAL STUD) TO GO TO UNDERSIDE OF DECK AND PROVIDE ACOUSTICAL BATT INSULATION.

D. COORDINATE INSTALLATION OF REQUIRED BLOCKING AND STABALIZING FOR FIXTURES.

E. THE STRUCTURAL STRENGTH OF GRAB BARS AT ACCESSIBLE WATER CLOSETS SHALL COMPLY WITH TEXAS ACCESSIBILTY STANDARDS 2012.

F. FURNSIH & INSTALL KITCHEN APPLIANCES AT BREAK ROOMS AS NOTED.

KEY NOTES: RESTROOMS & BREAK ROOMS

1 WALL MOUNTED TOILET ACCESSIBLE
2 WALL MOUNTED TOILET
3 WALL MOUNTED URINAL ACCESSIBLE
4 WALL MOUNTED URINAL
5 URINAL PARTITION T-10
6 PHENOLIC TOILET PARTITION T-10
7 CLOTHES HOOK T-05
8 36" GRAB BAR T-03
9 42" GRAB BAR T-04
10 TOILET PAPER DISPENSER T-01
11 SEAT COVER DISPENSER T-02
12 SANITARY NAPKIN DISPOSAL T-06
13 HI-LOW DRINKING FOUNTAIN WITH BOTTLE FILLER
14 PRIVACY GLASS
15 SEMI-RECESSED PAPER TOWEL DISPENSER T-07
16 SOAP DISPENSER T-08
17 MIRROR T-09
18 SOLID SURFACE COUNTERTOP
19 LAVATORY SINK UNDERMONT AT COUNTER
20 CANE APRON ACCESSORY
21 LINEAR SHOWER DRAIN
22 24" GRAB BAR
23 48" GRAB BAR
24 FOLDING SHOWER SEAT T-11
25 HANDHELD SHOWER SYSTEM
26 ALUMINUM CORNER GUARD FULL HEIGHT
27 ALUMINUM END CAP FULL HEIGHT
28 FURNITURE
29 BASE CABINET
30 UPPER CABINET
31 JANITOR'S SINK
32 REFRIGERATOR: FURNISH & INSTALL GE 21.9 CF TOP FREEZER REFRIGERATOR WHITE GTS22KGNRWW.
33 GYPSUM BOARD FURR-DOWN HEADER
34 OFFICE EQUIPMENT
35 GYM EQUIPMENT
36 STRUCTURAL BRACE FRAME RE: STRUCTURAL
37 PIPE PROTECTION
38 PROTECTIVE COVER UNDER LAVATORY
39 HAND SINK & VANITY UNIT, WALL MOUNTED BASIS OF DESIGN: SINK 43003L01 AVENTO & VANITY A87600 AVENTO BY VILLEROY & BOCH
40 DRINKING FOUNTAIN FILTERED WATER FILLER AT SINK
41 MICROWAVE: FURNISH & INSTALL GE 1.4 CF COUNTER TOP MICROWAVE OVEN WHITE JES1460DSWW.
42 DISHWASHER: FURNISH AND INSTALL GE GDT225SGLWW

FSGROUP® ARCHITECTS
16575 Village Drive
Houston Texas 77040
713 344 1752 PH
fsdesignbuild.com

PROJECT NAME

THE STATE OF TEXAS · FORT BEND COUNTY

INFORMATION TECHNOLGY BUILDING
1419 EUGENE HEIMANN CIRCLE
FORT BEND COUNTY . RICHMOND . TEXAS 77469

CONSULTANTS

PROFESSIONAL SEAL

REGISTERED ARCHITECT · FAKHRUDDIN 'N' SABIR · 22631 · STATE OF TEXAS
5/15/2024

ISSUED FOR
ISSUED FOR PROPOSALS AND PERMIT

REVISIONS

No.	DESCRIPTION	DATE

KEY PLAN

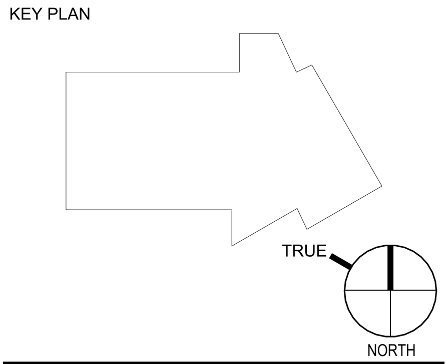

SHEET TITLE
ENLARGED PLAN BREAK ROOMS & COFFEE BARS

SCALE: As indicated
DATE: 05/15/2024
PROJECT NUMBER: 2319
SHEET NUMBER: **A416**

FILE PATH: Autodesk Docs://FBC IT Building/FBIT_A23.rvt
PLOT DATE: 5/22/2024 5:03:41 PM

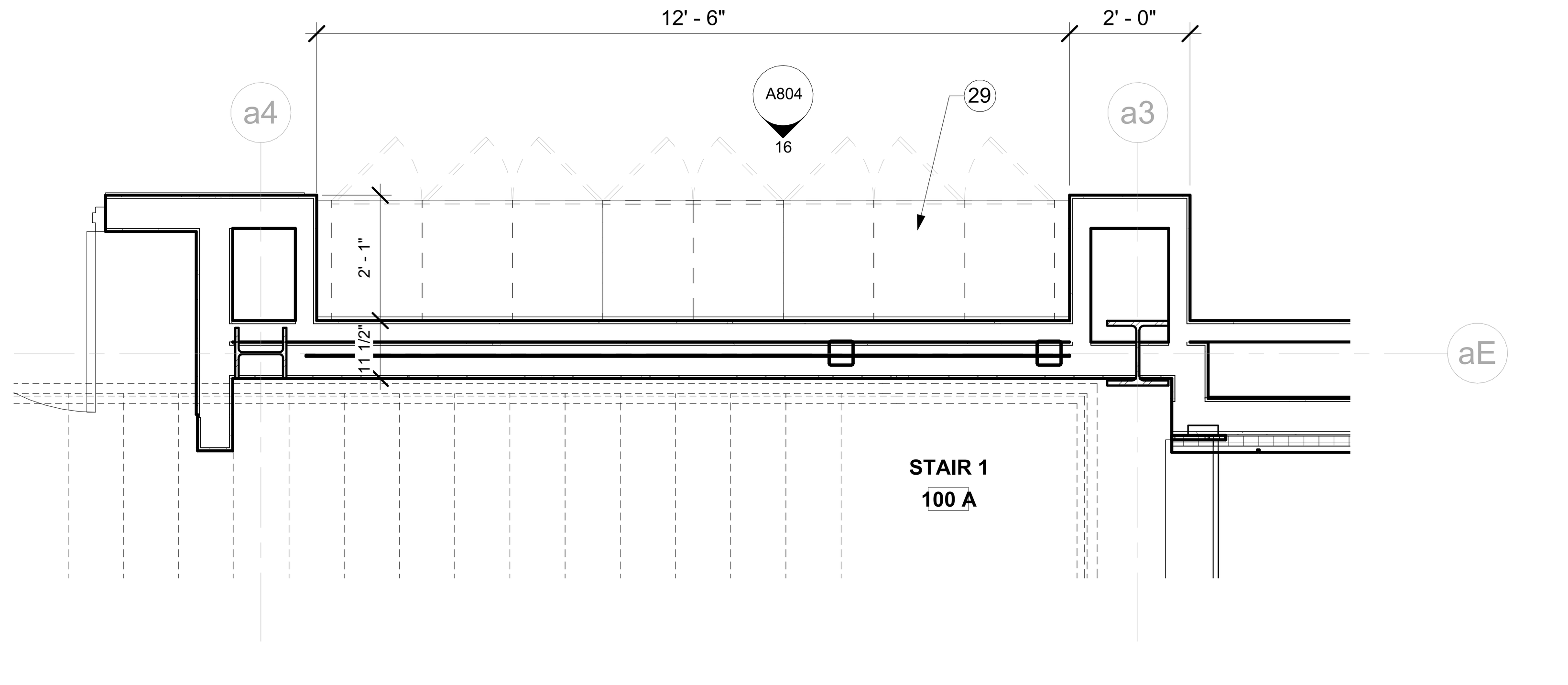

16 A417 ENLG PLAN: TRAINING ROOM 102
SCALE : 1/2" = 1'-0"

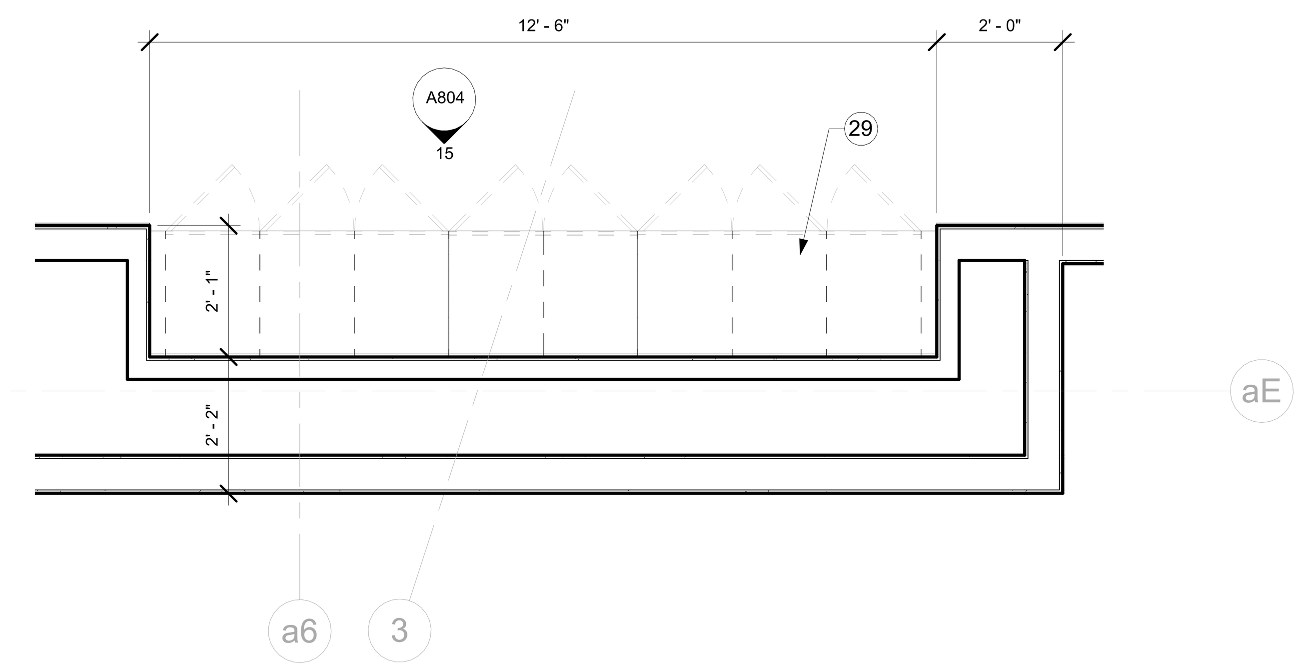

15 A417 ENLG PLAN: TRAINING ROOM 102
SCALE : 1/2" = 1'-0"

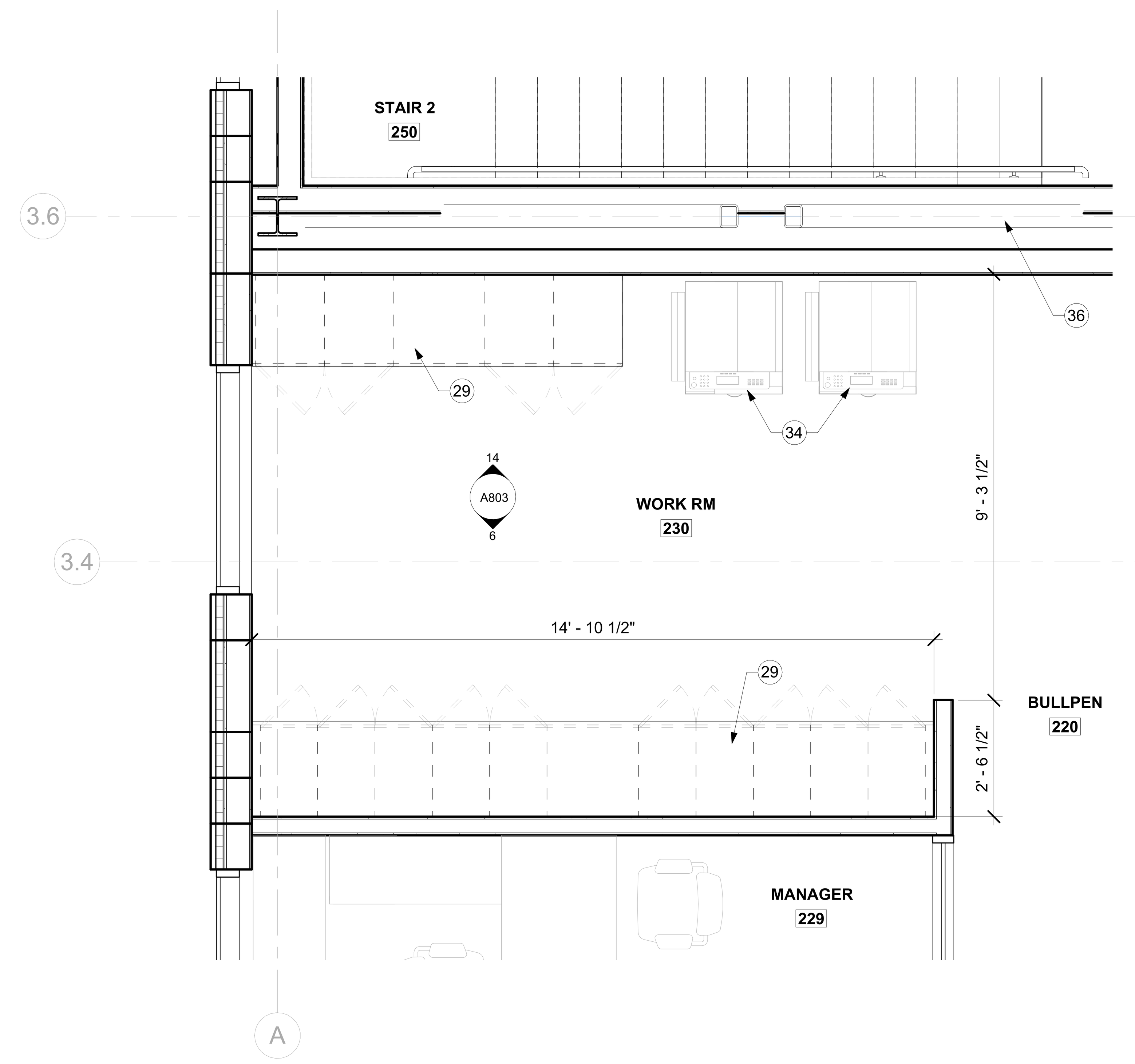

7 A417 ENLG PLAN: WORK ROOM 230
SCALE : 1/2" = 1'-0"

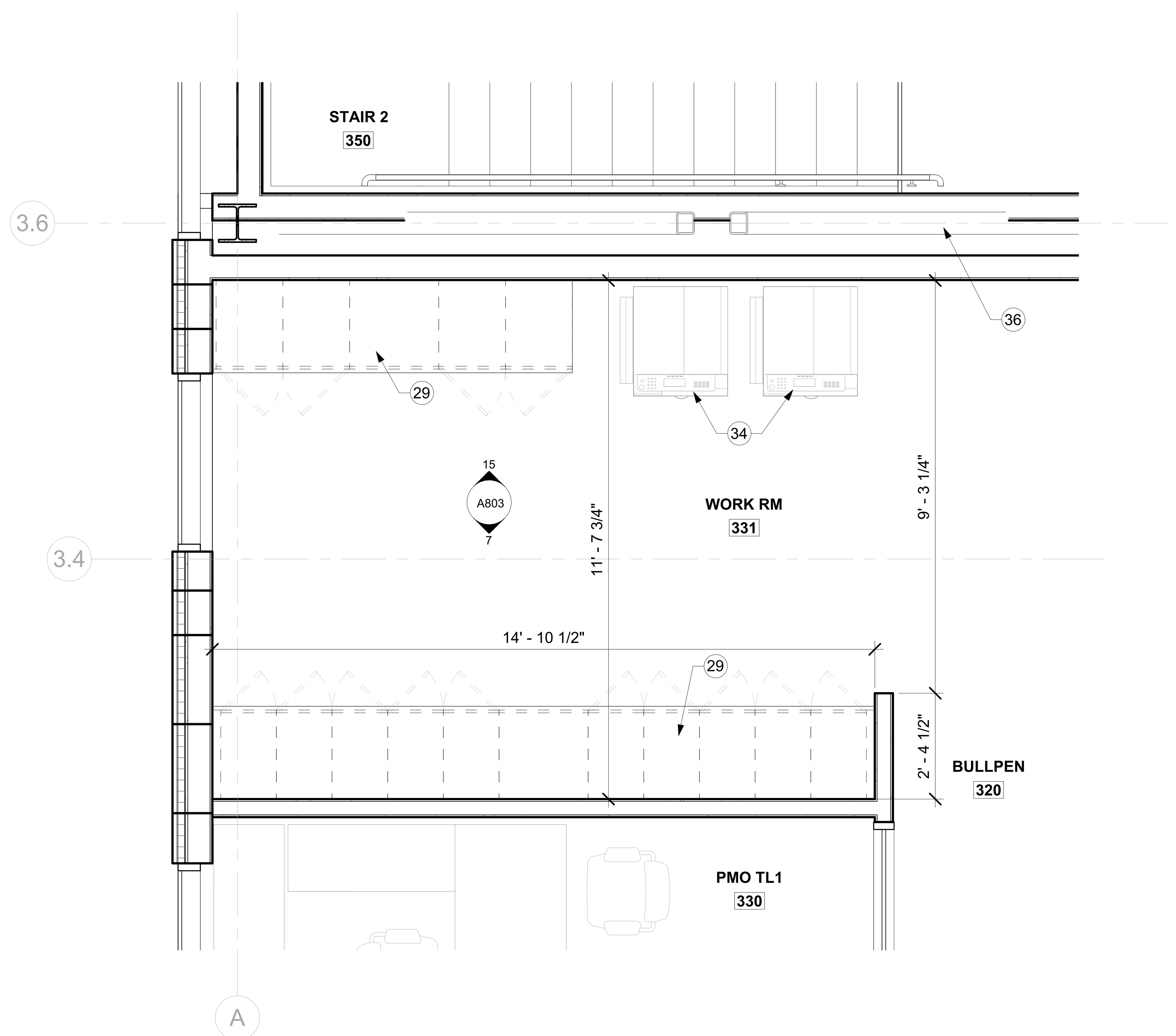

13 A417 ENLG PLAN: WORK ROOM 331
SCALE : 1/2" = 1'-0"

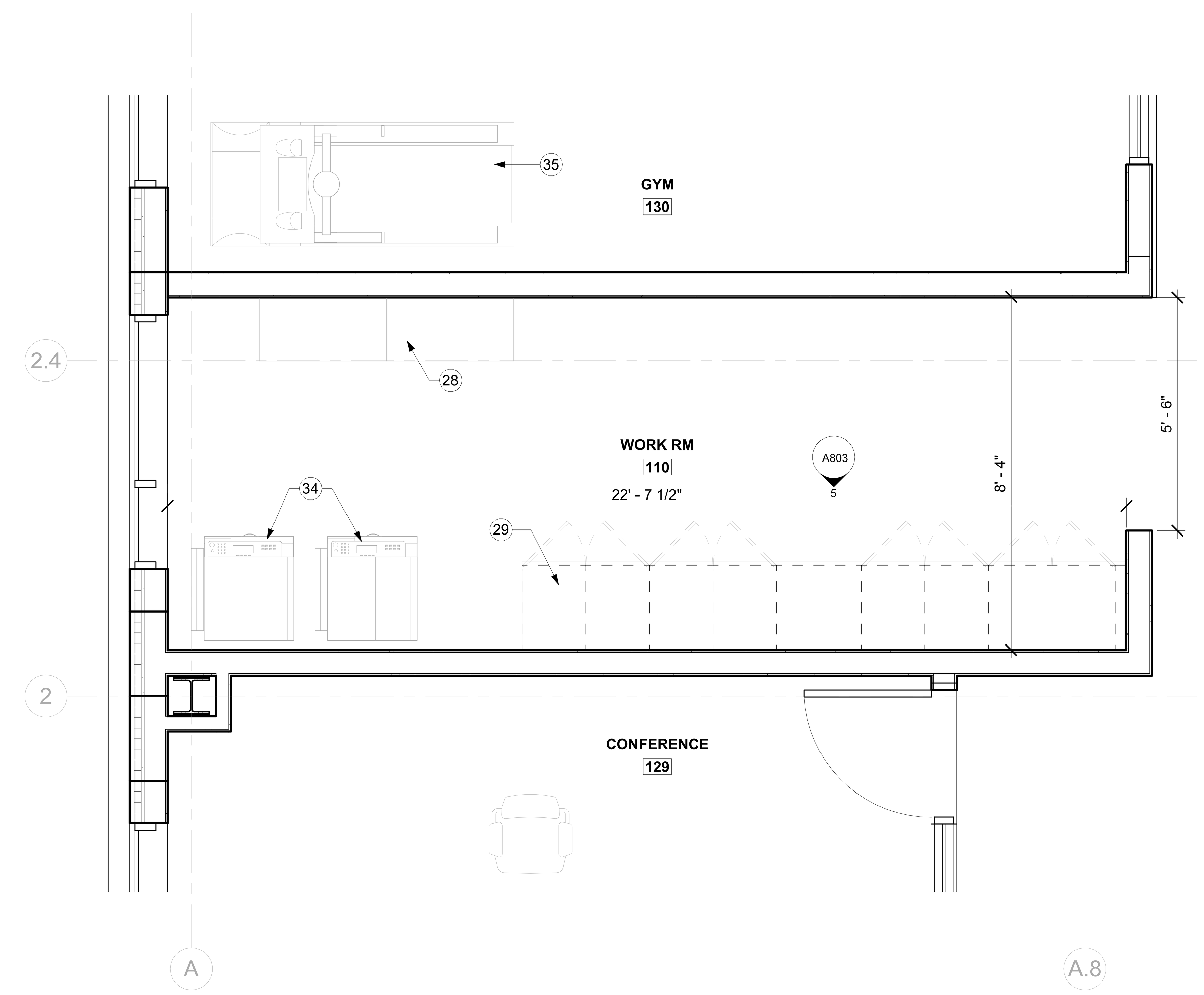

5 A417 ENLG PLAN: WORK ROOM 110
SCALE : 1/2" = 1'-0"

GENERAL NOTES: RESTROOMS & BREAK ROOMS

A. FINISH SCHEDULE & LEGEND REFER TO A900 & A901.

B. WALL PARTITION TYPES REFER TO A950.

C. RESTROOMS AT OFFICE BUILDING, PERIMETER WALLS (GYP & METAL STUD) TO GO TO UNDERSIDE OF DECK AND PROVIDE ACOUSTICAL BATT INSULATION.

D. COORDINATE INSTALLATION OF REQUIRED BLOCKING AND STABALIZING FOR FIXTURES.

E. THE STRUCTURAL STRENGTH OF GRAB BARS AT ACCESSIBLE WATER CLOSETS SHALL COMPLY WITH TEXAS ACCESSIBILTY STANDARDS 2012.

KEY NOTES: RESTROOMS & BREAK ROOMS (1)

1 WALL MOUNTED TOILET ACCESSIBLE
2 WALL MOUNTED TOILET
3 WALL MOUNTED URINAL ACCESSIBLE
4 WALL MOUNTED URINAL
5 URINAL PARTITION T-10
6 PHENOLIC TOILET PARTITION T-10
7 CLOTHES HOOK T-05
8 36" GRAB BAR T-03
9 42" GRAB BAR T-04
10 TOILET PAPER DISPENSER T-01
11 SEAT COVER DISPENSER T-02
12 SANITARY NAPKIN DISPOSAL T-06
13 HI-LOW DRINKING FOUNTAIN WITH BOTTLE FILLER
14 PRIVACY GLASS
15 SEMI-RECESSED PAPER TOWEL DISPENSER T-07
16 SOAP DISPENSER T-08
17 MIRROR T-09
18 SOLID SURFACE COUNTERTOP
19 LAVATORY SINK UNDERMONT AT COUNTER
20 CANE APRON ACCESSORY
21 LINEAR SHOWER DRAIN
22 24" GRAB BAR
23 48" GRAB BAR
24 FOLDING SHOWER SEAT T-11
25 HANDHELD SHOWER SYSTEM
26 ALUMINUM CORNER GUARD FULL HEIGHT
27 ALUMINUM END CAP FULL HEIGHT
28 FURNITURE
29 BASE CABINET
30 UPPER CABINET
31 JANITOR'S SINK
32 REFRIGERATOR
33 GYPSUM BOARD FURR-DOWN HEADER
34 OFFICE EQUIPMENT
35 GYM EQUIPMENT
36 STRUCTURAL BRACE FRAME RE: STRUCTURAL
37 PIPE PROTECTION
38 PROTECTIVE COVER UNDER LAVATORY
39 HAND SINK & VANITY UNIT, WALL MOUNTED
BASIS OF DESIGN: SINK 43003L01 AVENTO & VANITY A87600 AVENTO
BY VILLEROY & BOCH
40 DRINKING FOUNTAIN FILTERED WATER FILLER AT SINK
41
42 DISHWASHER: FURNISH AND INSTALL GE GDT225SGLWW

FSGROUP® ARCHITECTS
16575 Village Drive
Houston Texas 77040
713 344 1752 PH
fsdesignbuild.com

PROJECT NAME

THE STATE OF TEXAS
FORT BEND COUNTY

INFORMATION TECHNOLGY BUILDING
1419 EUGENE HEIMANN CIRCLE
FORT BEND COUNTY . RICHMOND . TEXAS 77469

CONSULTANTS

PROFESSIONAL SEAL

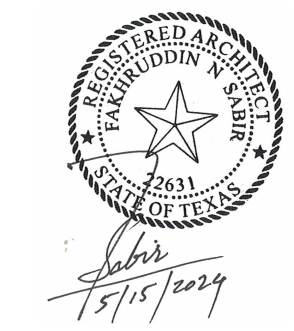

ISSUED FOR
ISSUED FOR PROPOSALS AND PERMIT

REVISIONS

No.	DESCRIPTION	DATE

KEY PLAN

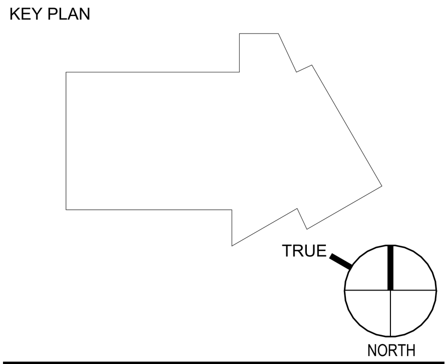

SHEET TITLE
ENLARGED PLAN
WORK ROOMS &
TRAINING ROOM

SCALE: As indicated
DATE: 05/15/2024
PROJECT NUMBER: 2319
SHEET NUMBER: A417

FILE PATH: Autodesk Docs://FBC IT Building/FBIT_A23.rvt
PLOT DATE: 5/21/2024 5:05:04 PM

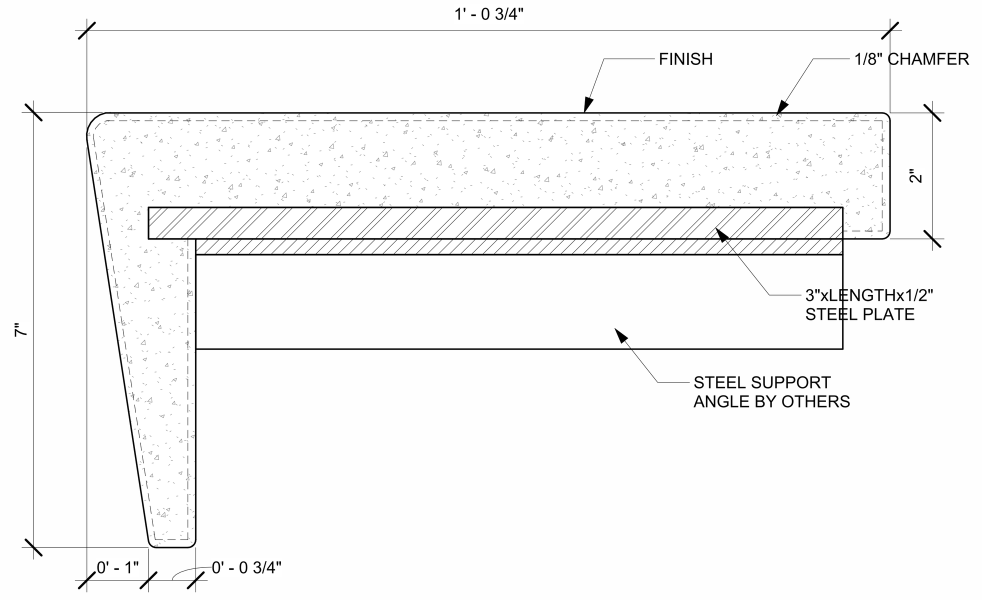

16 A430 PRECAST TERRAZZO TREAD PANEL DETAILS

SCALE : 6" = 1'-0"

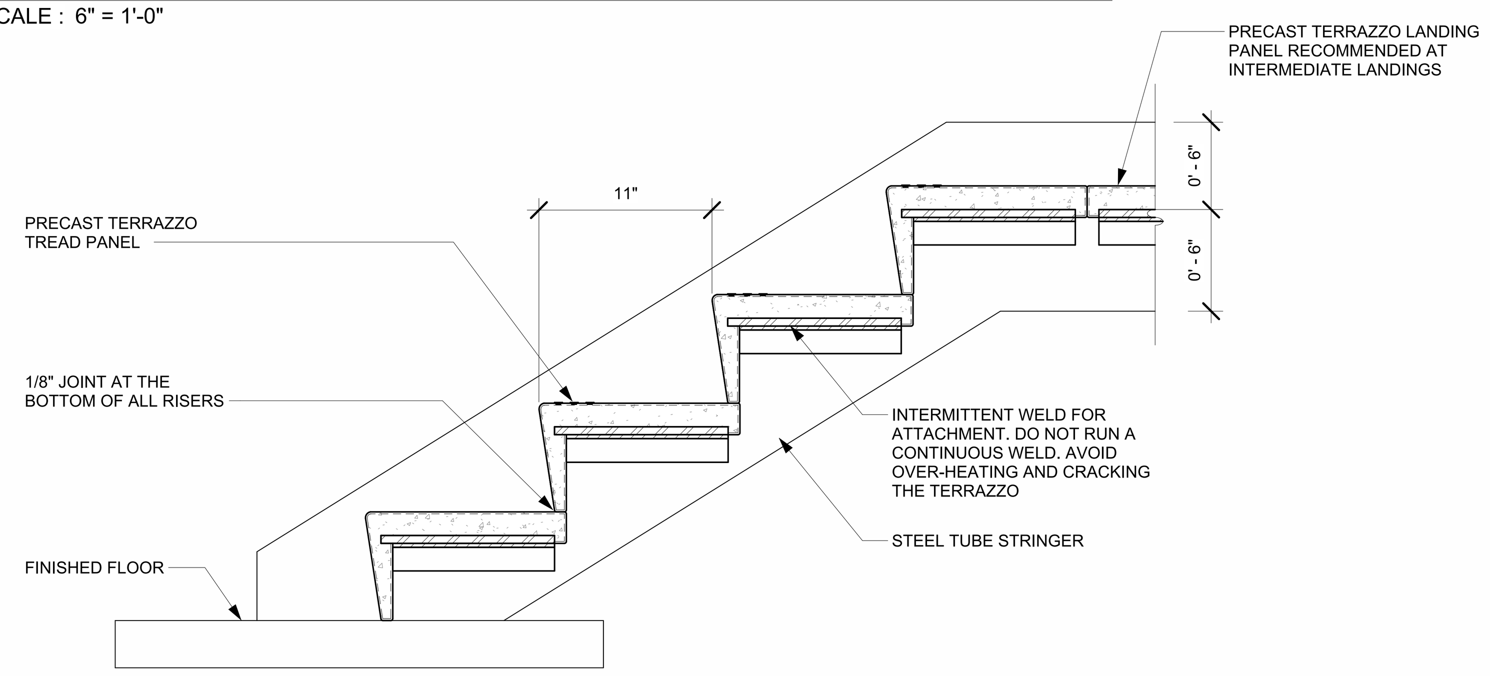

15 A430 PARTIAL SECTION OF STAIR 1 FOR TERRAZZO DETAILS

SCALE : 1 1/2" = 1'-0"

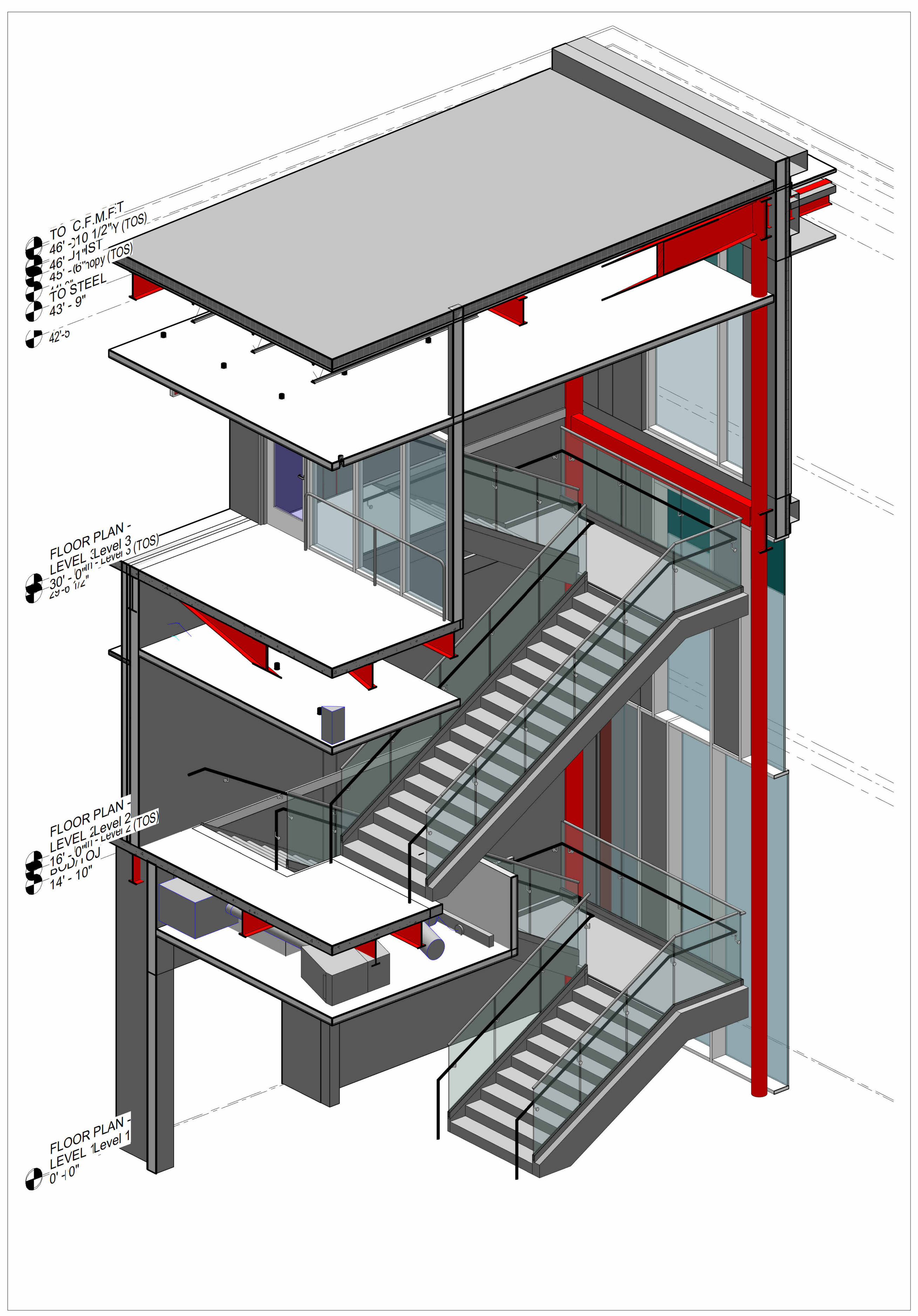

13 A430 STAIR 1 - 3D VIEW

SCALE :

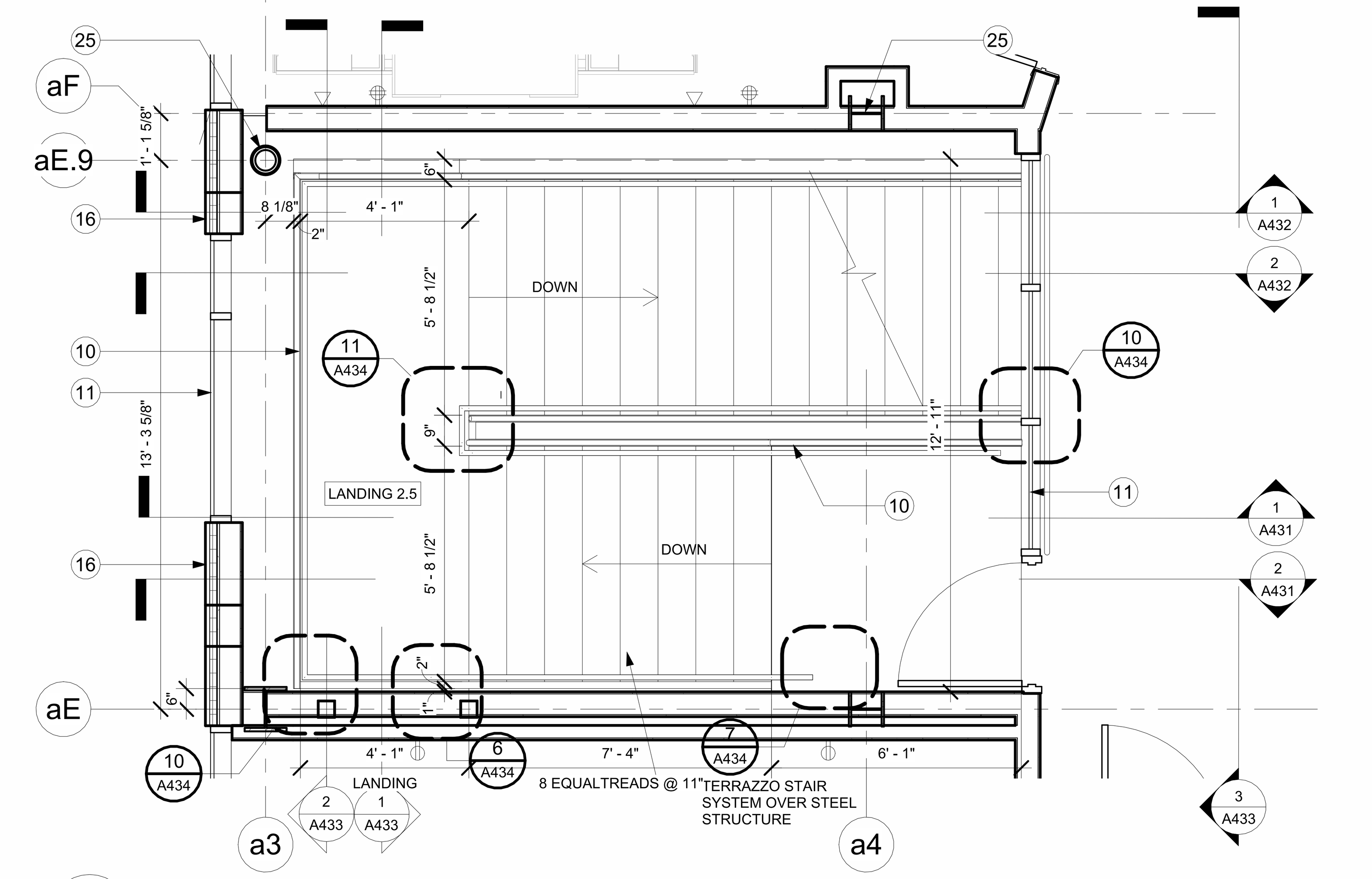

8 A430 ENLG PLAN: STAIR 1 - LEVEL 3

SCALE : 3/8" = 1'-0"

INTERIOR STAIR WITH GLASS GUARDRAIL

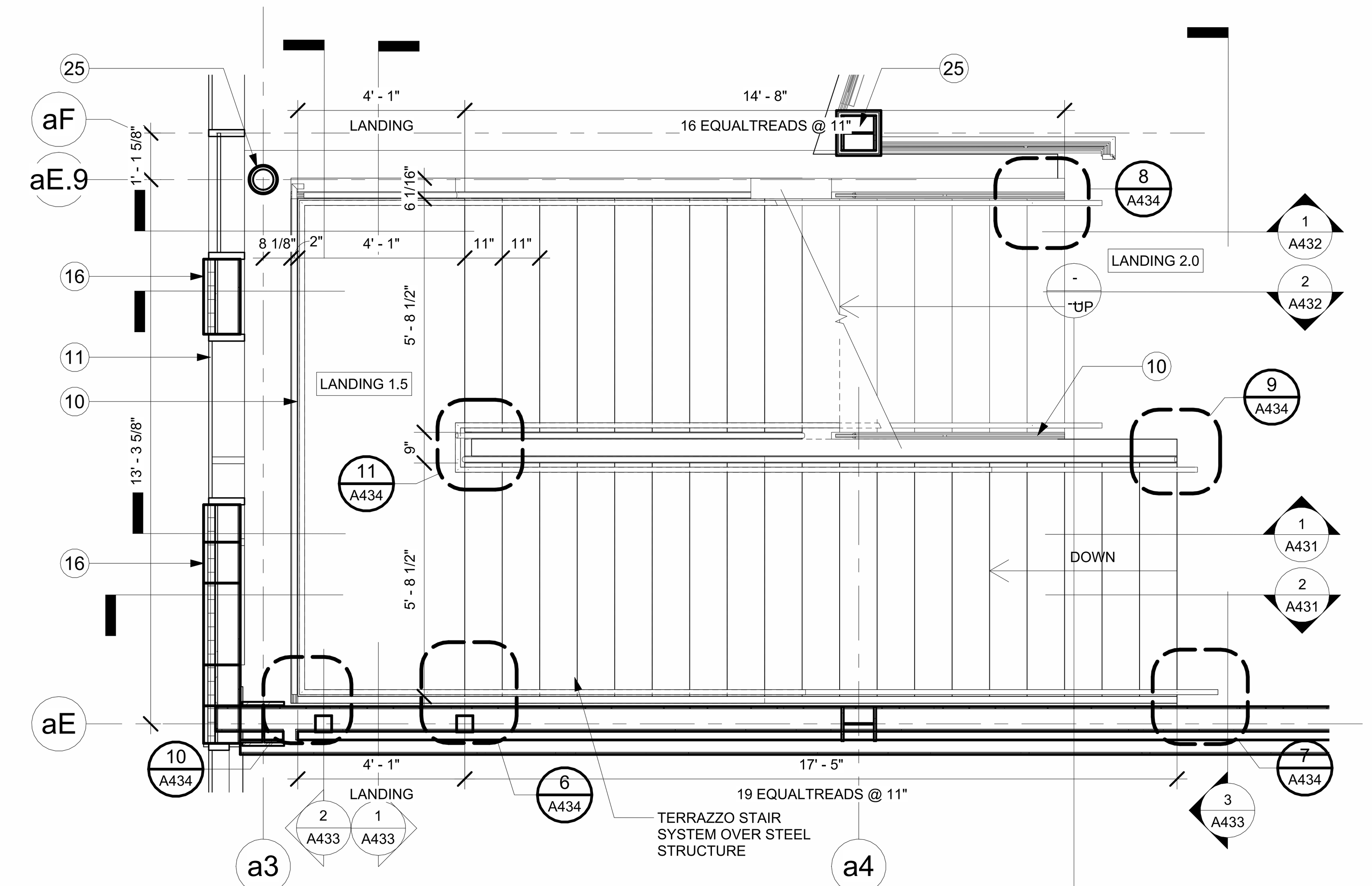

7 A430 ENLG PLAN: STAIR 1 - LEVEL 2

SCALE : 3/8" = 1'-0"

INTERIOR STAIR WITH GLASS GUARDRAIL

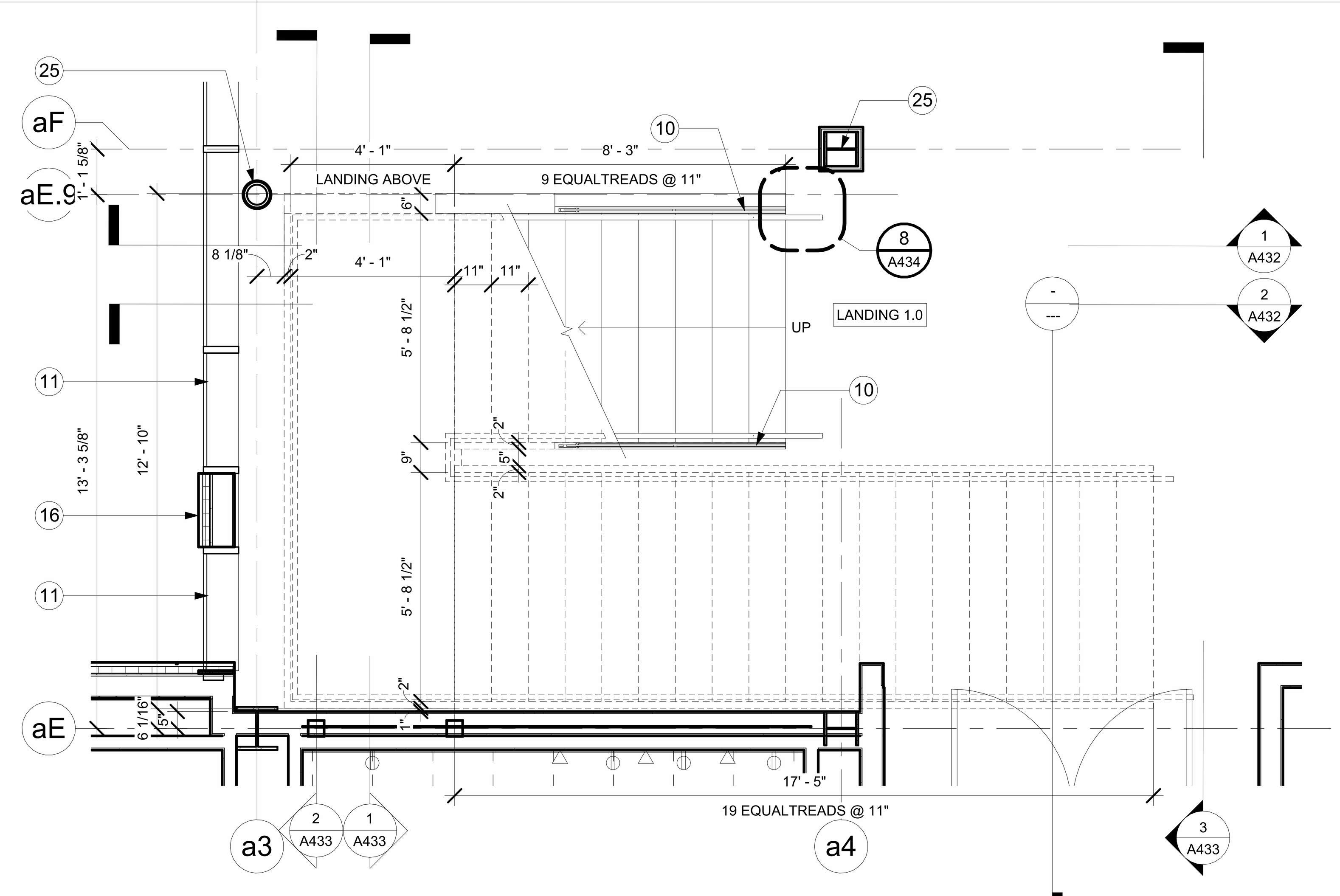

6 A430 ENLG PLAN: STAIR 1 - LEVEL 1

SCALE : 3/8" = 1'-0"

INTERIOR STAIR WITH GLASS GUARDRAIL

GENERAL NOTES: STAIRS

A STRUCTURAL SYSTEM FOR STAIR SUPPORT SHALL BE INCLUDED AS A DEFERRED SUBMITTAL DESIGNED BY STEEL FABRICATOR, AND SEALED BY A TEXAS STRUCTURAL ENGINEER.

KEY NOTES

1 METAL PANEL BAND.
2 EYEBROW CANOPY.
3 METAL BAND AT PARAPET.
4 METAL PANEL COPING.
5 PERFORATED METAL PANEL.
6 CONCRETE FILLED METAL PAN STAIRS.
7 HDG RAILING.
8 PAINTED STEEL HANDRAIL.
9 PERFORATED STAINLESS STEEL GUARDRAIL INFILL PANEL.
10 GLASS GUARDRAIL SYSTEM.
11 ALUMINUM CURTAINWALL SYSTEM.
12 INSULATED VISION GLAZING.
13 INSULATED SPANDREL GLAZING.
14 TPO MEMBRANE ROOFING, WRAPS AROUND UPPER BAND.
15 ELEVATOR SHAFT WITH FIRE-RATED ENCLOSURE.
16 METAL PANEL WALL SYSTEM.
17 FEATURE METAL PANEL WALL.
18 THERMAL FIBERGLASS INSULATION.
19 MINERAL WOOL INSULATION.
20 5/8" GYPSUM BOARD SHEATHING.
21 5/8" GYPSUM BOARD.
22 FLUID APPLIED AIR AND WATER RESISTIVE BARRIER.
23 6" METAL STUDS.
24 CONCRETE SLAB ON METAL DECK. RE STRUCTURE.
25 COLUMN . REF STRUCTURE.
26 BEAM. REF STRUCTURE.
27 CONCRETE FOUNDATION SLAB. RE STRUCTURE.
28 CEILING.
29 JOIST. RE STRUCTURE.
30 SUBFRAME TO SUPPORT METAL PANEL SYSTEM.
31 PRESEAURE TREATED WOOD BLOCKING.
32 STUD TRACK.
33 EYEBROW CANOPY LIGHT.
34 ROOF COVER SHEATHING.
35 CONTINOUS HORIZONTAL WALL SUPPORT. RE : STRUCTURE.
36 EMBED PLATE. RE : STRUCTURE.
37 Z GIRTS.
38 STEEL POST. RE: STRUCTURE.
39 PLYWOOD SHEATHING

FSGROUP® ARCHITECTS
16575 Village Drive
Houston Texas 77040
713 344 1752 PH
fsdesignbuild.com

PROJECT NAME

INFORMATION TECHNOLGY BUILDING
1419 EUGENE HEIMANN CIRCLE
FORT BEND COUNTY . RICHMOND . TEXAS 77469

CONSULTANTS

PROFESSIONAL SEAL

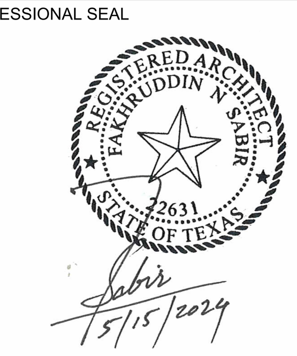

ISSUED FOR

ISSUED FOR PROPOSALS AND PERMIT

REVISIONS

No.	DESCRIPTION	DATE

KEY PLAN

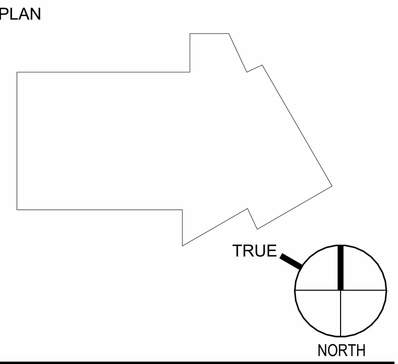

SHEET TITLE

VERTICAL CIRCULATION STAIR 1 ENLG PLANS

SCALE: As indicated

DATE: 05/15/2024

PROJECT NUMBER: 2319

SHEET NUMBER: A430

FILE PATH: Autodesk Docs://FBC IT Building/FBIT_A23.rvt
PLOT DATE: 5/21/2024 5:05:36 PM

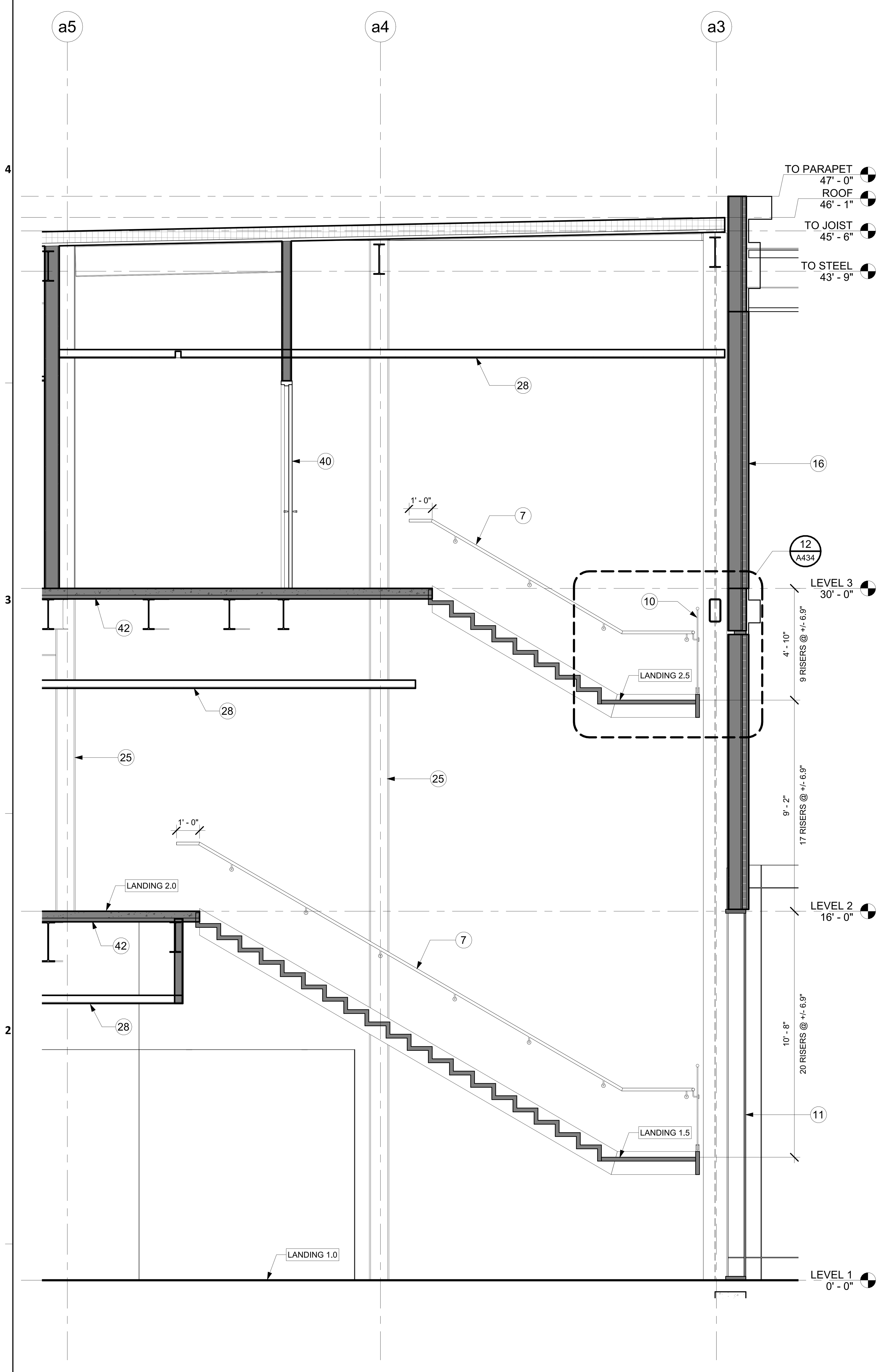

2
A431
SECTION - STAIR 1 VIEW EAST
SCALE : 3/8" = 1'-0"

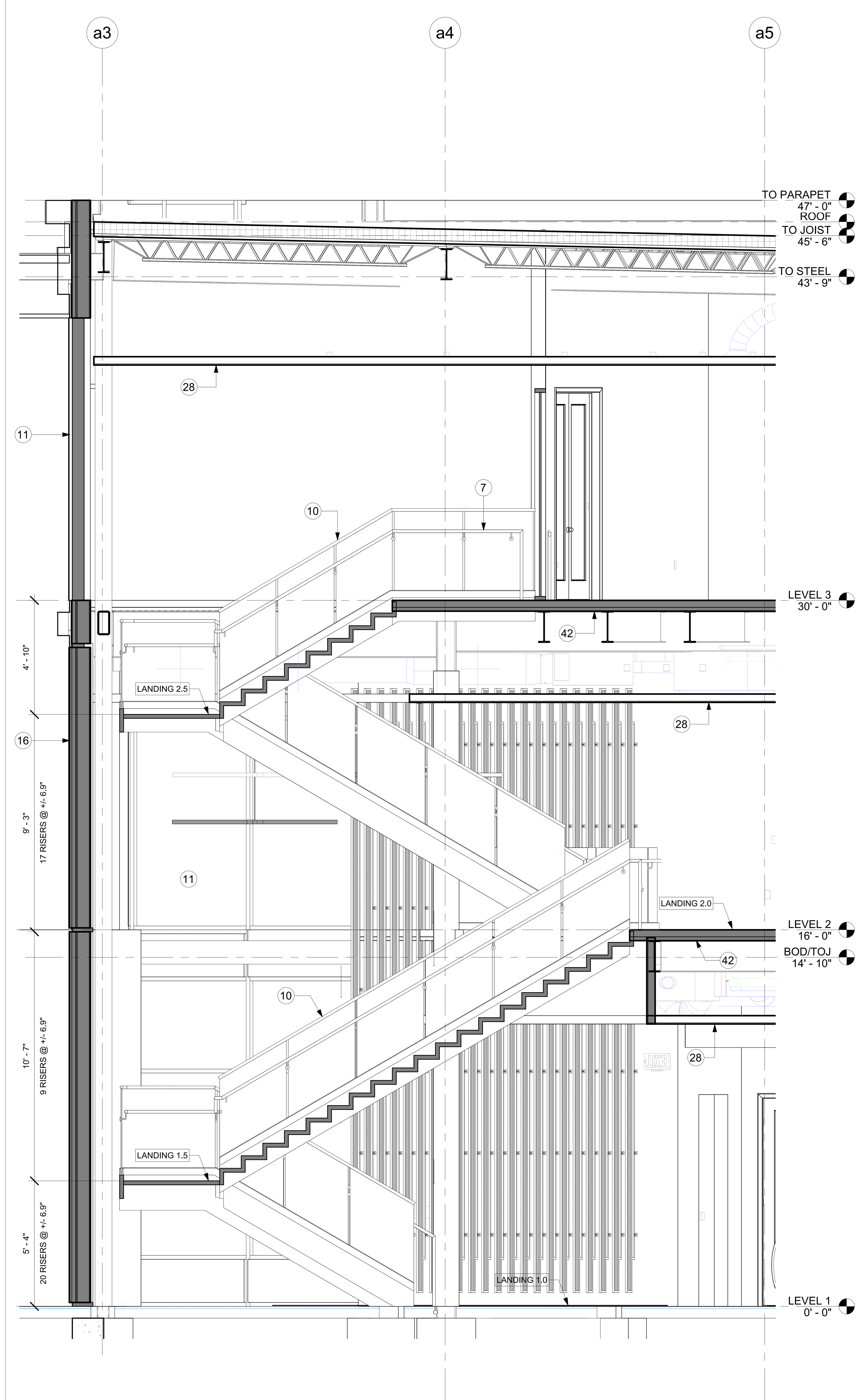

1
A431
SECTION: STAIR 1 VIEW WEST
SCALE : 3/8" = 1'-0"

GENERAL NOTES: STAIRS

A STRUCTURAL SYSTEM FOR STAIR SUPPORT SHALL BE INCLUDED AS A DEFERRED SUBMITTAL DESIGNED BY STEEL FABRICATOR, AND SEALED BY A TEXAS STRUCTURAL ENGINEER.

STAIRS : KEY NOTES

1 METAL PANEL BAND.
2 EYEBROW CANOPY.
3 METAL BAND AT PARAPET.
4 METAL PANEL COPING.
5 PERFORATED METAL PANEL.
6 CONCRETE FILLED METAL PAN STAIRS.
7 STAINLESS STEEL HANDRAIL.
8 PREFINISHED ALUMINUM HANDRAIL.
9 PERFORATED STAINLESS STEEL GUARDRAIL INFILL PANEL.
10 GLASS GUARDRAIL SYSTEM.
11 ALUMINUM CURTAINWALL SYSTEM.
12 INSULATED VISION GLAZING.
13 INSULATED SPANDREL GLAZING.
14 TPO MEMBRANE ROOFING, WRAPS AROUND UPPER BAND.
15 ELEVATOR SHAFT WITH FIRE-RATED ENCLOSURE.
16 METAL PANEL WALL SYSTEM.
17 FEATURE METAL PANEL WALL.
18 THERMAL FIBERGLASS INSULATION.
19 MINERAL WOOL INSULATION.
20 5/8" GYPSUM BOARD SHEATHING.
21 5/8" GYPSUM BOARD.
22 FLUID APPLIED AIR AND WATER RESISTIVE BARRIER.
23 6" METAL STUDS.
24 CONCRETE SLAB ON METAL DECK. RE STRUCTURE.
25 COLUMN . REF STRUCTURE.
26 BEAM. REF STRUCTURE.
27 CONCRETE FOUNDATION SLAB. RE STRUCTURE.
28 CEILING.
29 JOIST. RE STRUCTURE.
30 SUBFRAME TO SUPPORT METAL PANEL SYSTEM.
31 PRESSURE TREATED WOOD BLOCKING.
32 STUD TRACK.
33 EYEBROW CANOPY LIGHT.
34 ROOF COVER SHEATHING.
35 CONTINOUS HORIZONTAL WALL SUPPORT. RE : STRUCTURE.
36 EMBED PLATE. RE : STRUCTURE.
37 Z GIRTS.
38 STEEL POST. RE: STRUCTURE.
39 PLYWOOD SHEATHING
40 1-HOUR FIRE RATED GLAZING SYSTEM AT LEVEL 3 LANDING
41 1-HOUR FIRE RATED PARTITION
42 1-HOUR FIRE PROTECTION AT FLOOR-CEILING ASSEMBLY

FSGROUP® ARCHITECTS
16575 Village Drive
Houston Texas 77040
713 344 1752 PH
fsdesignbuild.com

PROJECT NAME

THE STATE OF TEXAS · FORT BEND COUNTY

INFORMATION TECHNOLGY BUILDING
1419 EUGENE HEIMANN CIRCLE
FORT BEND COUNTY . RICHMOND . TEXAS 77469

CONSULTANTS

PROFESSIONAL SEAL

REGISTERED ARCHITECT FAKHRUDDIN 'N' SABIR 22631 STATE OF TEXAS
5/15/2024

ISSUED FOR
ISSUED FOR PROPOSALS AND PERMIT

REVISIONS

No.	DESCRIPTION	DATE

KEY PLAN

TRUE NORTH

SHEET TITLE
VERTICAL CIRCULATION STAIR 1 SECTIONS

SCALE As indicated
DATE 05/15/2024
PROJECT NUMBER 2319
SHEET NUMBER
A431

FILE PATH: Autodesk Docs://FBC IT Building/FBIT_A23.rvt
PLOT DATE: 5/22/2024 5:25:53 PM

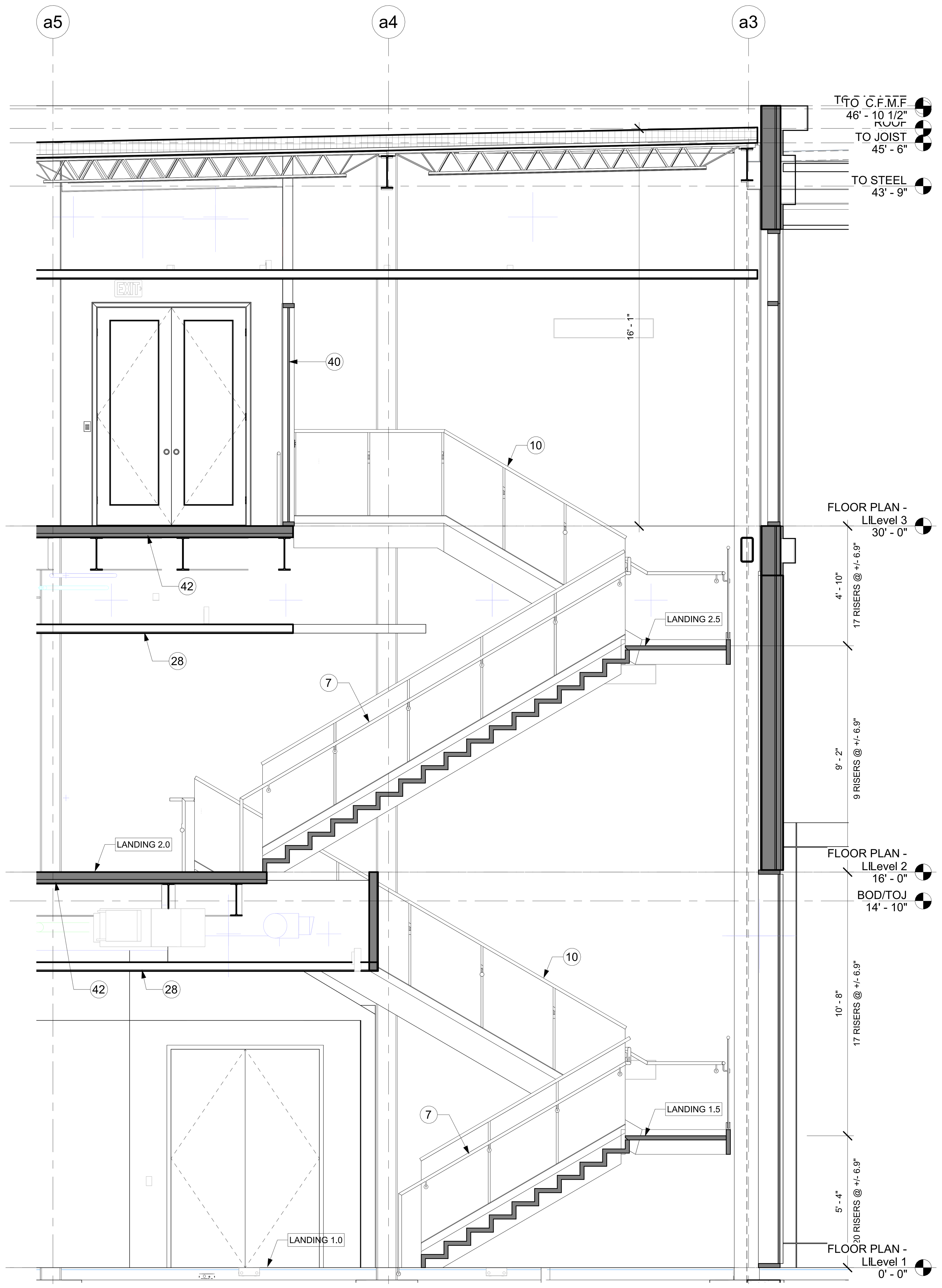

2
A432
STAIR 1 - SECTION LOOKING TO WALL
SCALE : 3/8" = 1'-0"

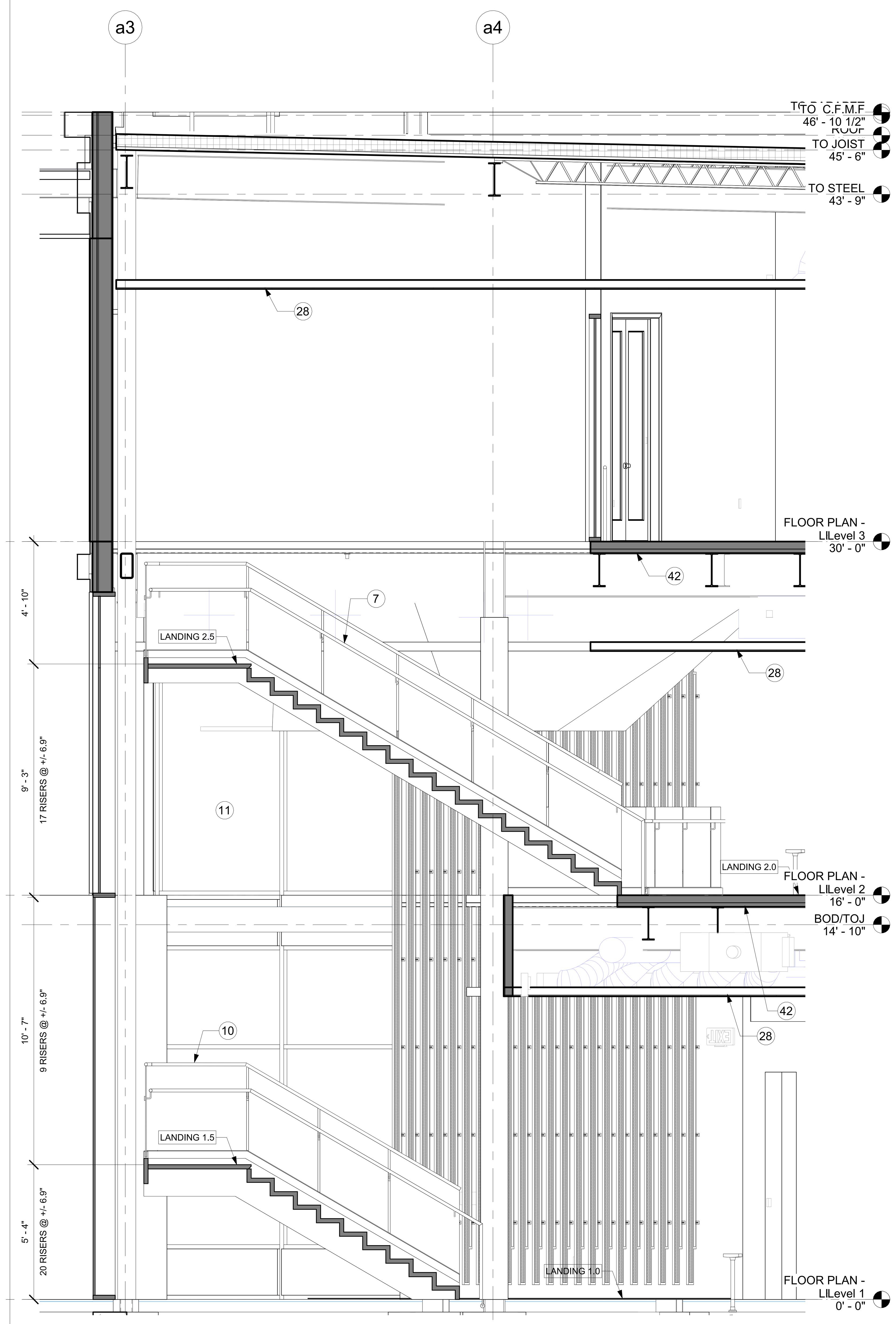

1
A432
STAIR 1 - SECTION LOOKING TO LOBBY
SCALE : 3/8" = 1'-0"

GENERAL NOTES: STAIRS

A STRUCTURAL SYSTEM FOR STAIR SUPPORT SHALL BE INCLUDED AS A DEFERRED SUBMITTAL DESIGNED BY STEEL FABRICATOR, AND SEALED BY A TEXAS STRUCTURAL ENGINEER.

STAIRS : KEY NOTES

1 METAL PANEL BAND.
2 EYEBROW CANOPY.
3 METAL BAND AT PARAPET.
4 METAL PANEL COPING.
5 PERFORATED METAL PANEL.
6 CONCRETE FILLED METAL PAN STAIRS.
7 STAINLESS STEEL HANDRAIL.
8 PREFINISHED ALUMINUM HANDRAIL.
9 PERFORATED STAINLESS STEEL GUARDRAIL INFILL PANEL.
10 GLASS GUARDRAIL SYSTEM.
11 ALUMINUM CURTAINWALL SYSTEM.
12 INSULATED VISION GLAZING.
13 INSULATED SPANDREL GLAZING.
14 TPO MEMBRANE ROOFING, WRAPS AROUND UPPER BAND.
15 ELEVATOR SHAFT WITH FIRE-RATED ENCLOSURE.
16 METAL PANEL WALL SYSTEM.
17 FEATURE METAL PANEL WALL.
18 THERMAL FIBERGLASS INSULATION.
19 MINERAL WOOL INSULATION.
20 5/8" GYPSUM BOARD SHEATHING.
21 5/8" GYPSUM BOARD.
22 FLUID APPLIED AIR AND WATER RESISTIVE BARRIER.
23 6" METAL STUDS.
24 CONCRETE SLAB ON METAL DECK. RE STRUCTURE.
25 COLUMN . REF STRUCTURE.
26 BEAM. REF STRUCTURE.
27 CONCRETE FOUNDATION SLAB. RE STRUCTURE.
28 CEILING.
29 JOIST. RE STRUCTURE.
30 SUBFRAME TO SUPPORT METAL PANEL SYSTEM.
31 PRESSURE TREATED WOOD BLOCKING.
32 STUD TRACK.
33 EYEBROW CANOPY LIGHT.
34 ROOF COVER SHEATHING.
35 CONTINOUS HORIZONTAL WALL SUPPORT. RE : STRUCTURE.
36 EMBED PLATE. RE : STRUCTURE.
37 Z GIRTS.
38 STEEL POST. RE: STRUCTURE.
39 PLYWOOD SHEATHING
40 1-HOUR FIRE RATED GLAZING SYSTEM AT LEVEL 3 LANDING
41 1-HOUR FIRE RATED PARTITION
42 1-HOUR FIRE PROTECTION AT FLOOR-CEILING ASSEMBLY

FSGROUP® ARCHITECTS
16575 Village Drive
Houston Texas 77040
713 344 1752 PH
fsdesignbuild.com

PROJECT NAME

INFORMATION TECHNOLGY BUILDING
1419 EUGENE HEIMANN CIRCLE
FORT BEND COUNTY . RICHMOND . TEXAS 77469

CONSULTANTS

PROFESSIONAL SEAL

REGISTERED ARCHITECT FAKHRUDDIN N. SABIR 22631 STATE OF TEXAS
5/15/2024

ISSUED FOR
ISSUED FOR PROPOSALS AND PERMIT

REVISIONS

No.	DESCRIPTION	DATE

KEY PLAN

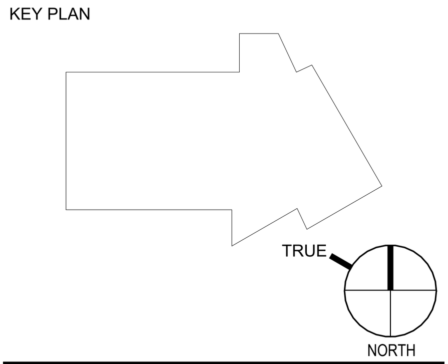

SHEET TITLE
VERTICAL CIRCULATION STAIR 1 SECTIONS

SCALE As indicated
DATE 05/15/2024
PROJECT NUMBER 2319
SHEET NUMBER
A432

FILE PATH: Autodesk Docs://FBC IT Building/FBIT_A23.rvt
PLOT DATE: 5/22/2024 5:28:05 PM

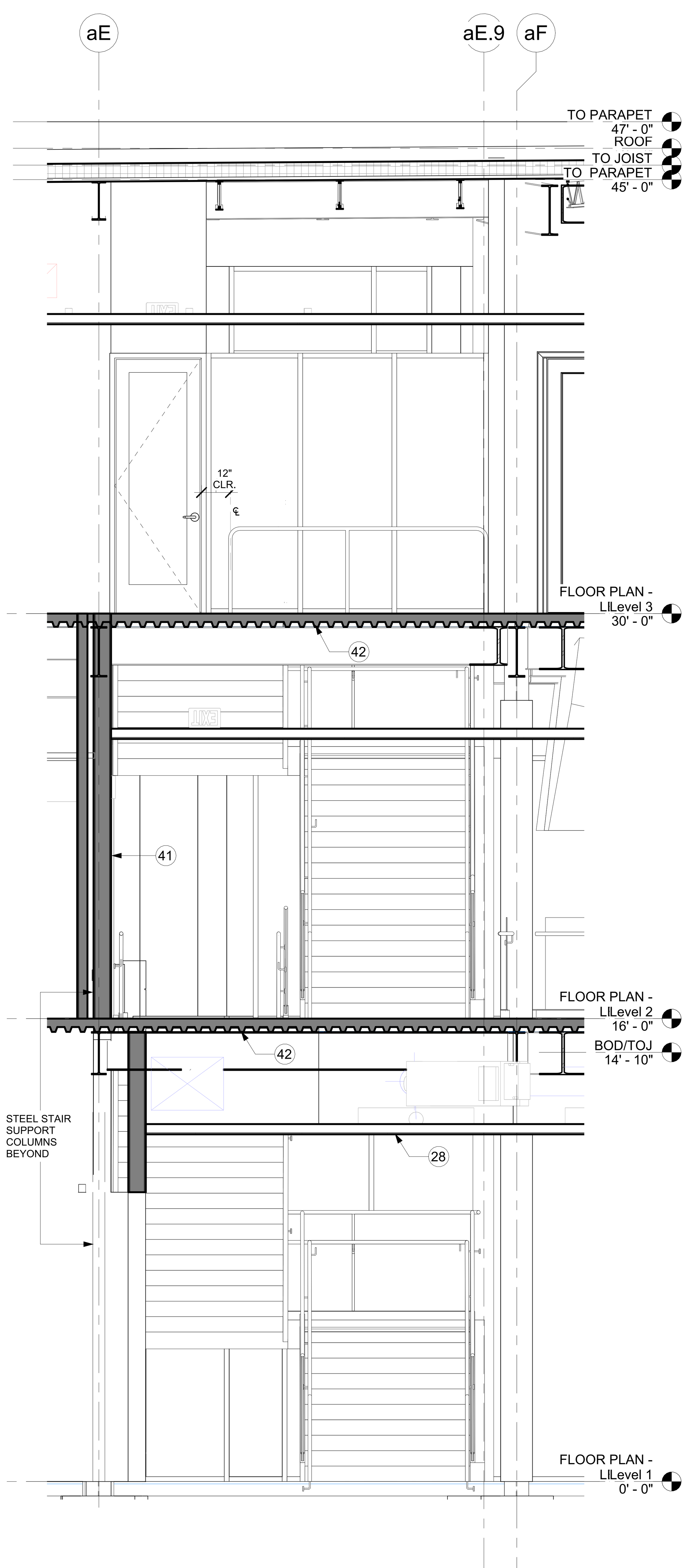

3
A433
STAIR 1 - SECTION 3
SCALE : 3/8" = 1'-0"

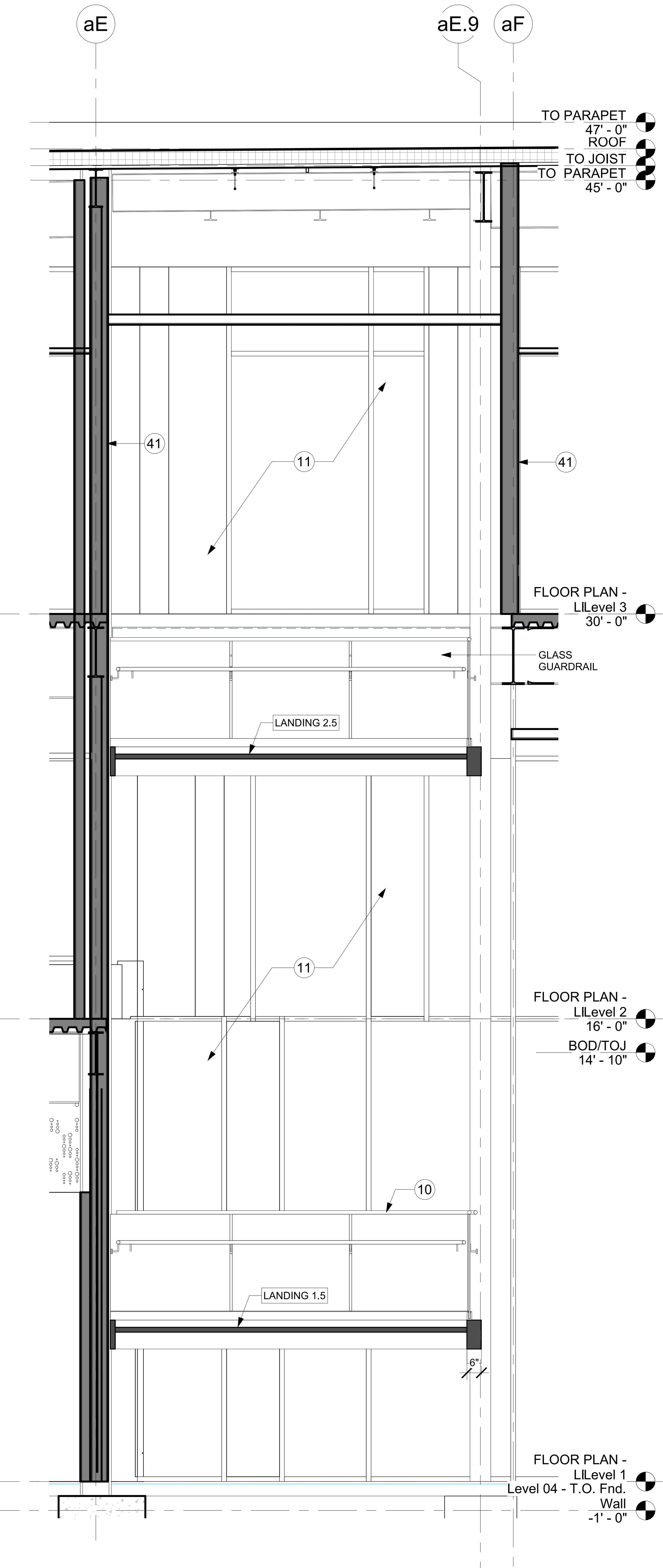

2
A433
STAIR 1 - SECTION 2
SCALE : 3/8" = 1'-0"

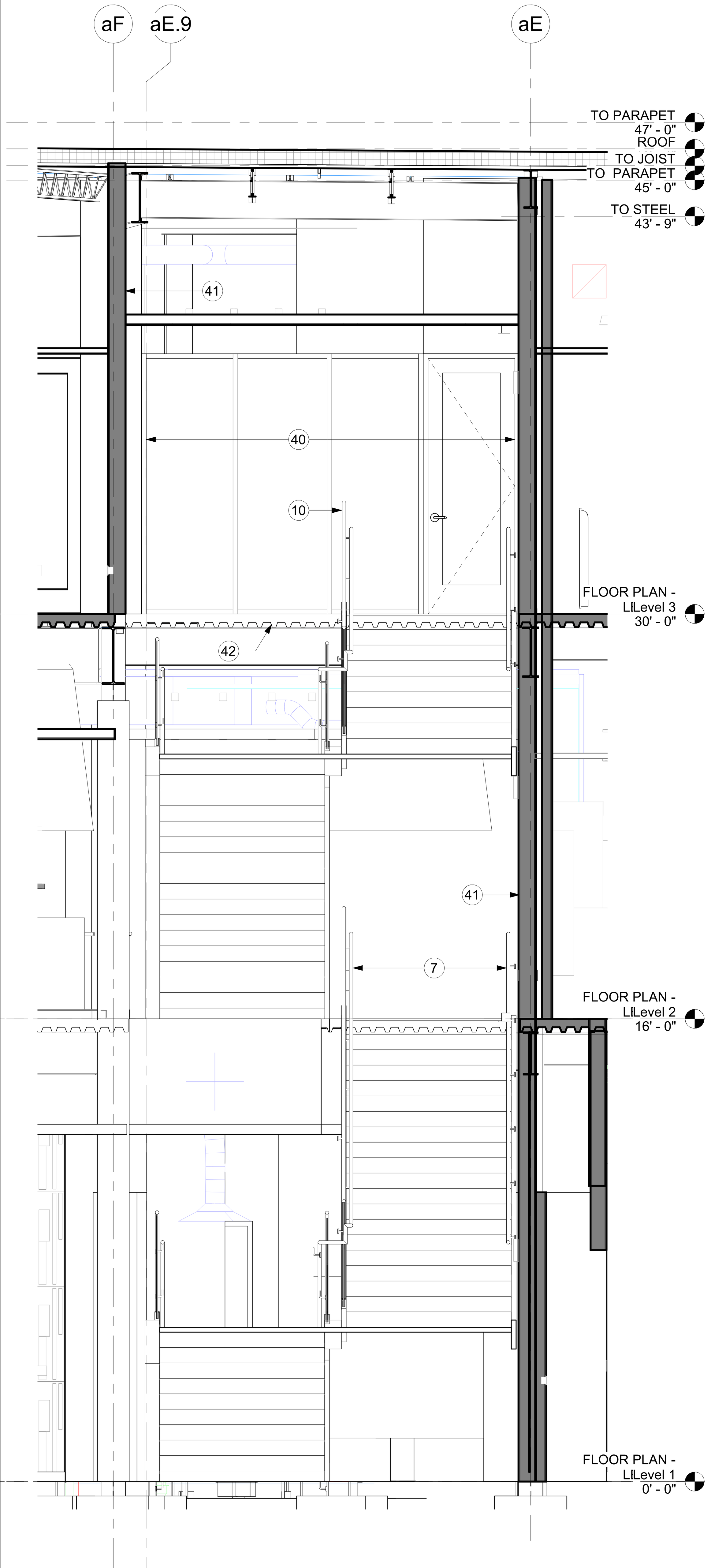

1
A433
STAIR 1 - SECTION 1
SCALE : 3/8" = 1'-0"

GENERAL NOTES: STAIRS

A STRUCTURAL SYSTEM FOR STAIR SUPPORT SHALL BE INCLUDED AS A DEFERRED SUBMITTAL DESIGNED BY STEEL FABRICATOR, AND SEALED BY A TEXAS STRUCTURAL ENGINEER.

STAIRS : KEY NOTES

1 METAL PANEL BAND.
2 EYEBROW CANOPY.
3 METAL BAND AT PARAPET.
4 METAL PANEL COPING.
5 PERFORATED METAL PANEL.
6 CONCRETE FILLED METAL PAN STAIRS.
7 STAINLESS STEEL HANDRAIL.
8 PREFINISHED ALUMINUM HANDRAIL.
9 PERFORATED STAINLESS STEEL GUARDRAIL INFILL PANEL.
10 GLASS GUARDRAIL SYSTEM.
11 ALUMINUM CURTAINWALL SYSTEM.
12 INSULATED VISION GLAZING.
13 INSULATED SPANDREL GLAZING.
14 TPO MEMBRANE ROOFING, WRAPS AROUND UPPER BAND.
15 ELEVATOR SHAFT WITH FIRE-RATED ENCLOSURE.
16 METAL PANEL WALL SYSTEM.
17 FEATURE METAL PANEL WALL.
18 THERMAL FIBERGLASS INSULATION.
19 MINERAL WOOL INSULATION.
20 5/8" GYPSUM BOARD SHEATHING.
21 5/8" GYPSUM BOARD.
22 FLUID APPLIED AIR AND WATER RESISTIVE BARRIER.
23 6" METAL STUDS.
24 CONCRETE SLAB ON METAL DECK. RE STRUCTURE.
25 COLUMN . REF STRUCTURE.
26 BEAM. REF STRUCTURE.
27 CONCRETE FOUNDATION SLAB. RE STRUCTURE.
28 CEILING.
29 JOIST. RE STRUCTURE.
30 SUBFRAME TO SUPPORT METAL PANEL SYSTEM.
31 PRESSURE TREATED WOOD BLOCKING.
32 STUD TRACK.
33 EYEBROW CANOPY LIGHT.
34 ROOF COVER SHEATHING.
35 CONTINOUS HORIZONTAL WALL SUPPORT. RE : STRUCTURE.
36 EMBED PLATE. RE : STRUCTURE.
37 Z GIRTS.
38 STEEL POST. RE: STRUCTURE.
39 PLYWOOD SHEATHING
40 1-HOUR FIRE RATED GLAZING SYSTEM AT LEVEL 3 LANDING
41 1-HOUR FIRE RATED PARTITION
42 1-HOUR FIRE PROTECTION AT FLOOR-CEILING ASSEMBLY

FSGROUP ARCHITECTS
16575 Village Drive
Houston Texas 77040
713 344 1752 PH
fsdesignbuild.com

PROJECT NAME

INFORMATION TECHNOLGY BUILDING
1419 EUGENE HEIMANN CIRCLE
FORT BEND COUNTY . RICHMOND . TEXAS 77469

CONSULTANTS

PROFESSIONAL SEAL

ISSUED FOR
ISSUED FOR PROPOSALS AND PERMIT

REVISIONS

No.	DESCRIPTION	DATE

KEY PLAN

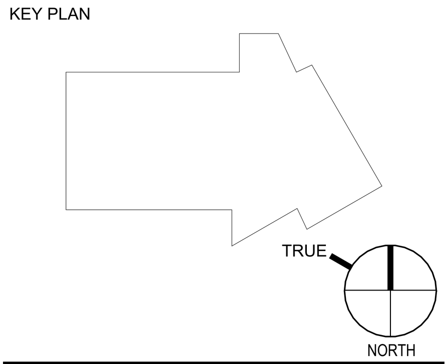

SHEET TITLE
VERTICAL CIRCULATION STAIR 1 SECTIONS

SCALE As indicated
DATE 05/15/2024
PROJECT NUMBER 2319
SHEET NUMBER
A433

FILE PATH: Autodesk Docs://FBC IT Building/FBIT_A23.rvt
PLOT DATE: 5/22/2024 5:29:56 PM

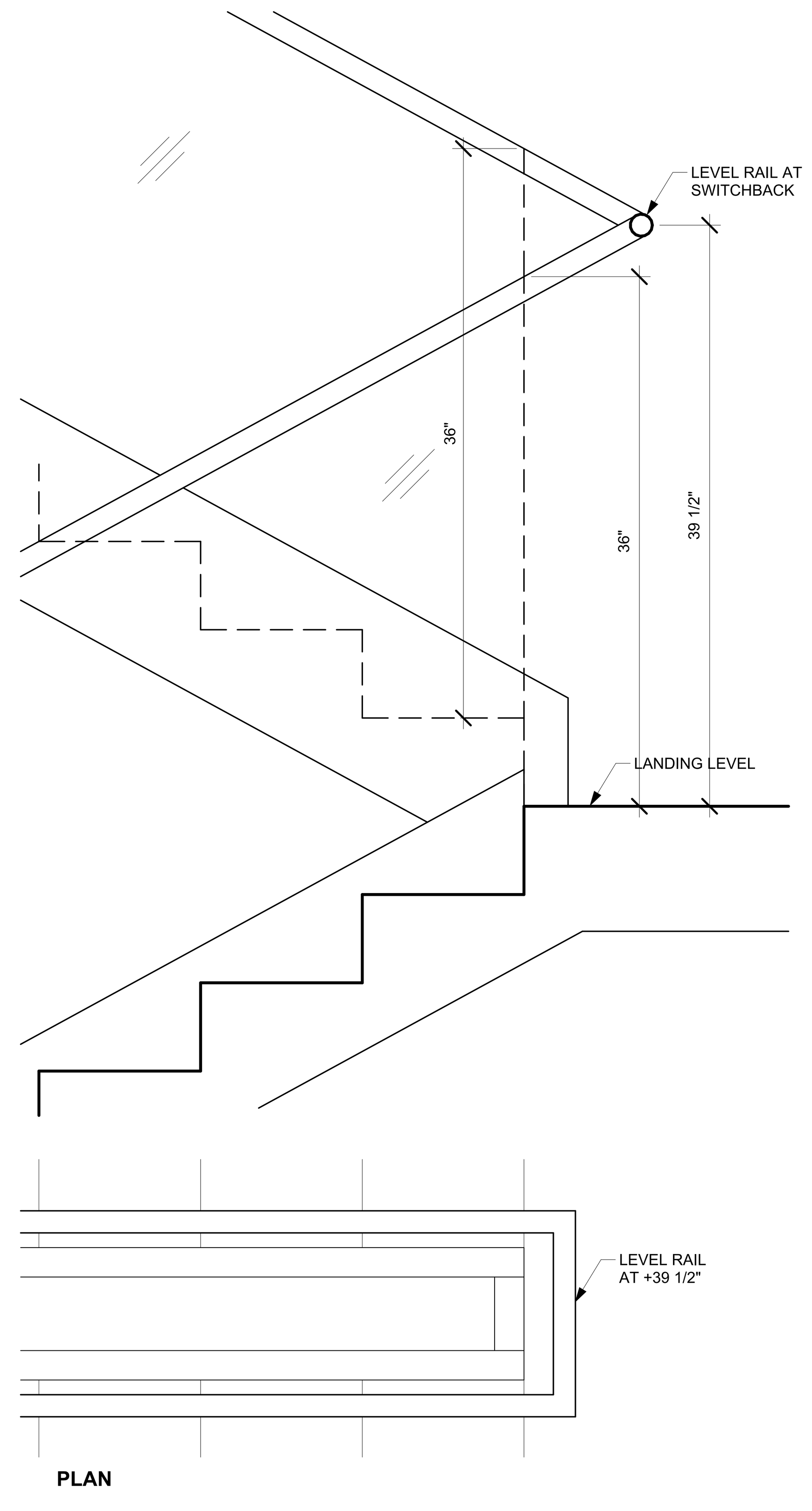

11 A434 LIGHTED HANDRAIL WRAP AT SWITCHBACK
SCALE : 1 1/2" = 1'-0"

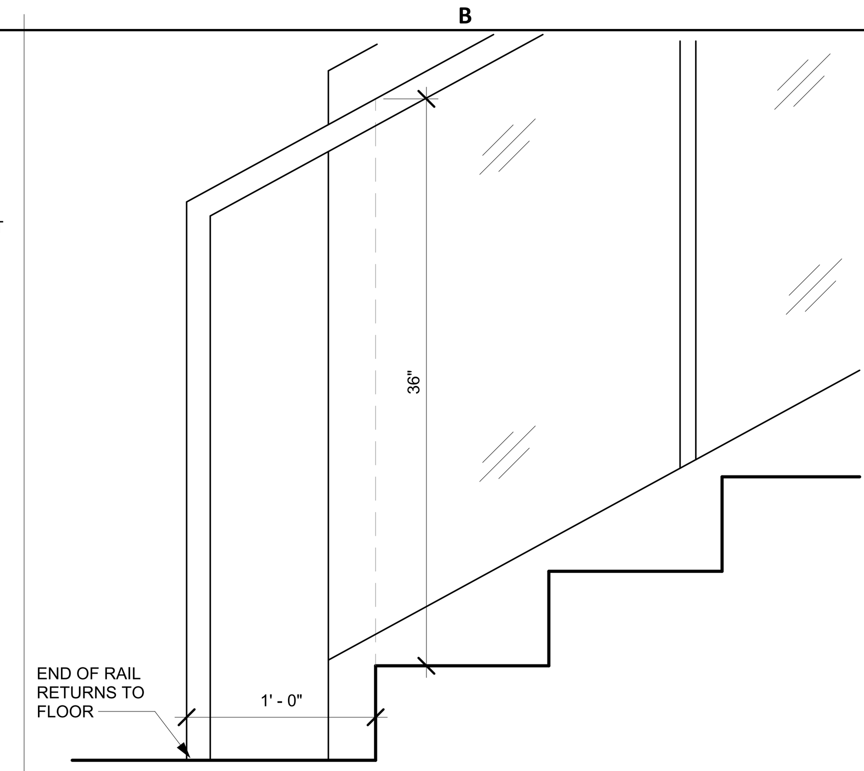

8 A434 LIGHTED HANDRAIL BOTTOM OF STAIRS GLASS GUARDRAIL
SCALE : 1 1/2" = 1'-0"

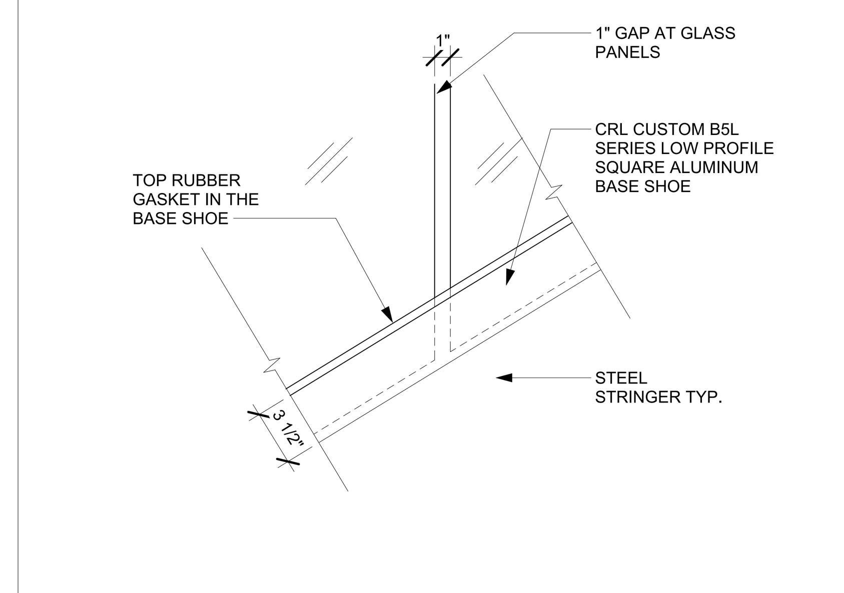

4 A434 STAIR 1 - GUARDRAIL BASE
SCALE : 1 1/2" = 1'-0"

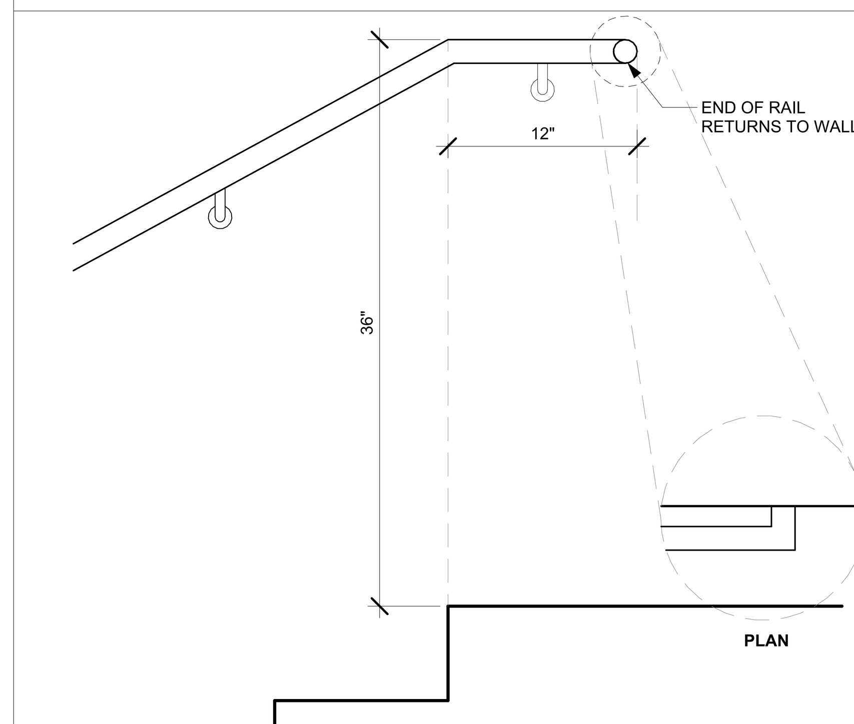

7 A434 LIGHTED HANDRAIL TOP OF STAIRS AGAINST WALL
SCALE : 1 1/2" = 1'-0"

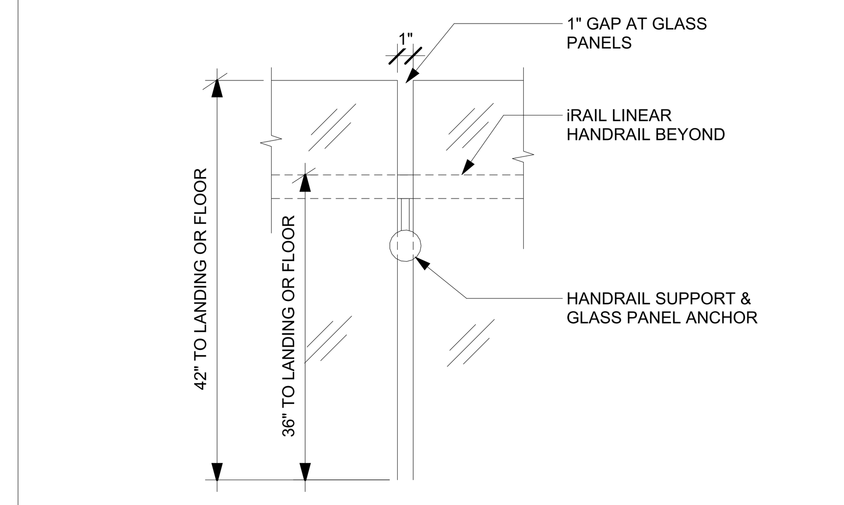

3 A434 STAIR 1 - HANDRAIL SUPPORT
SCALE : 1 1/2" = 1'-0"

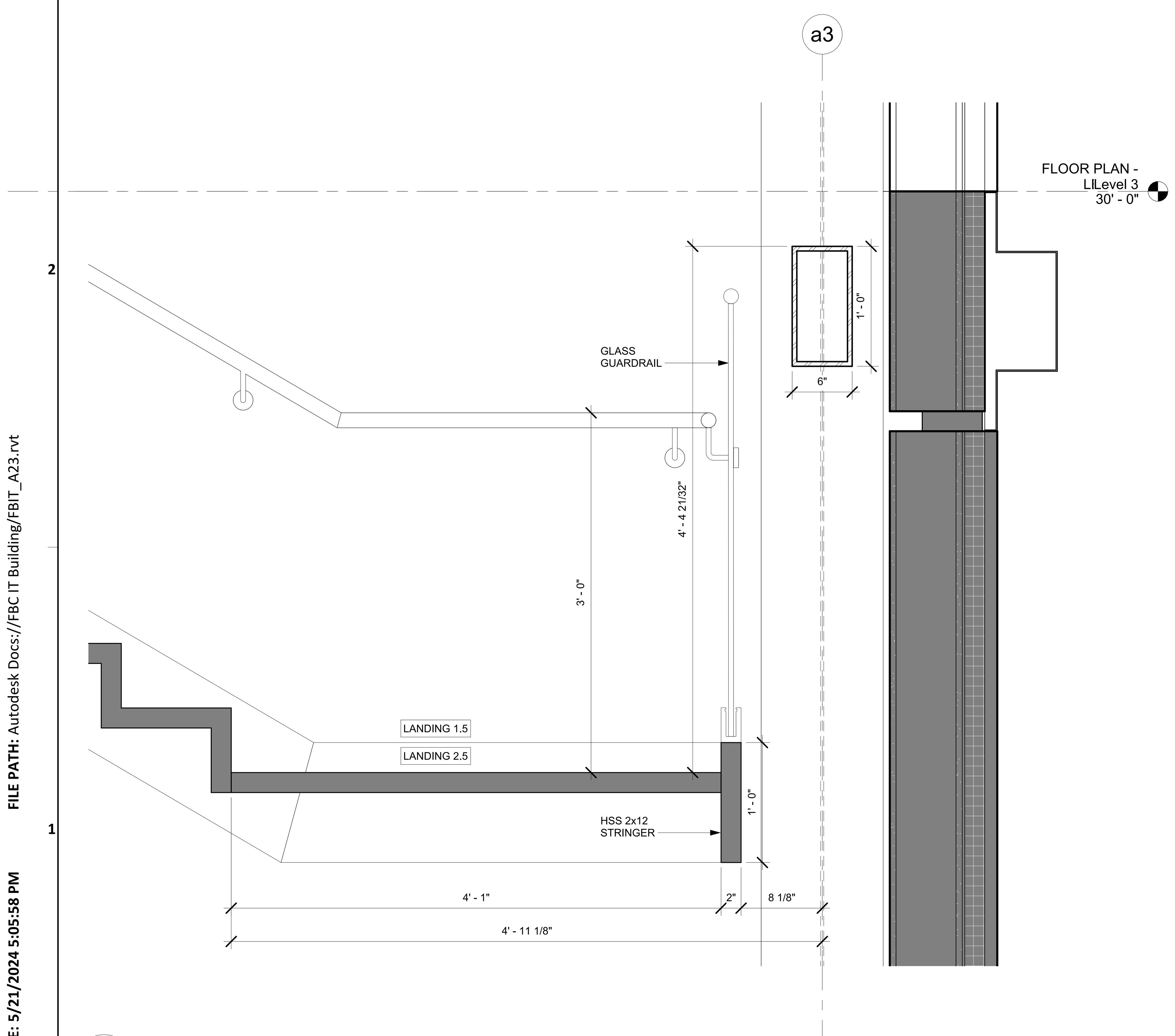

12 A434 STAIR 1 - SECTION AT LANDINGS 1.5 AND 2.5
SCALE : 1 1/2" = 1'-0"

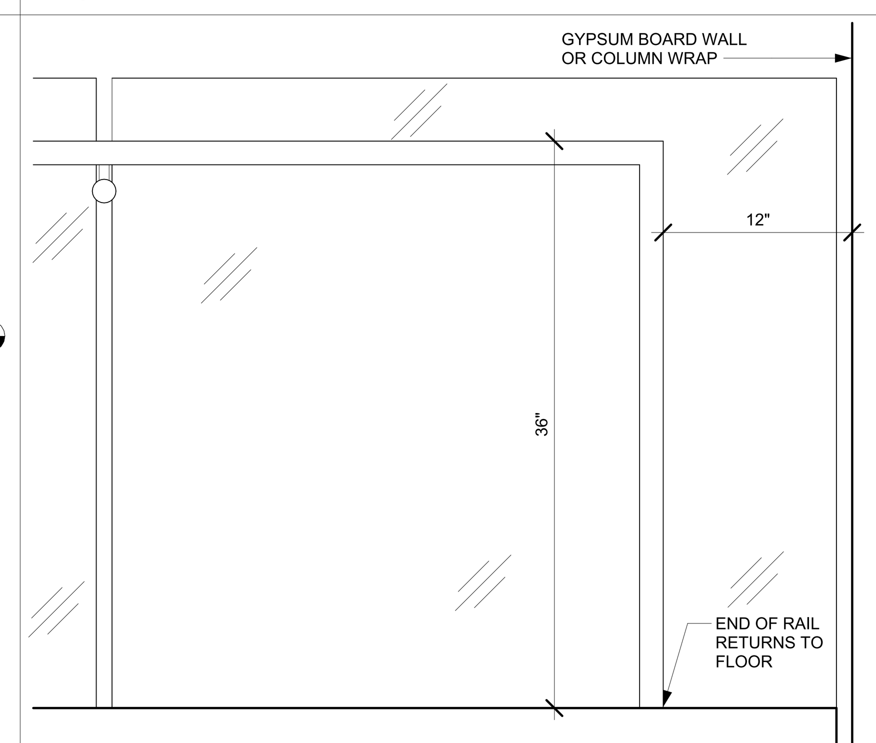

10 A434 LIGHTED HANDRAIL NEAR WALL GLASS GUARDRAIL
SCALE : 1 1/2" = 1'-0"

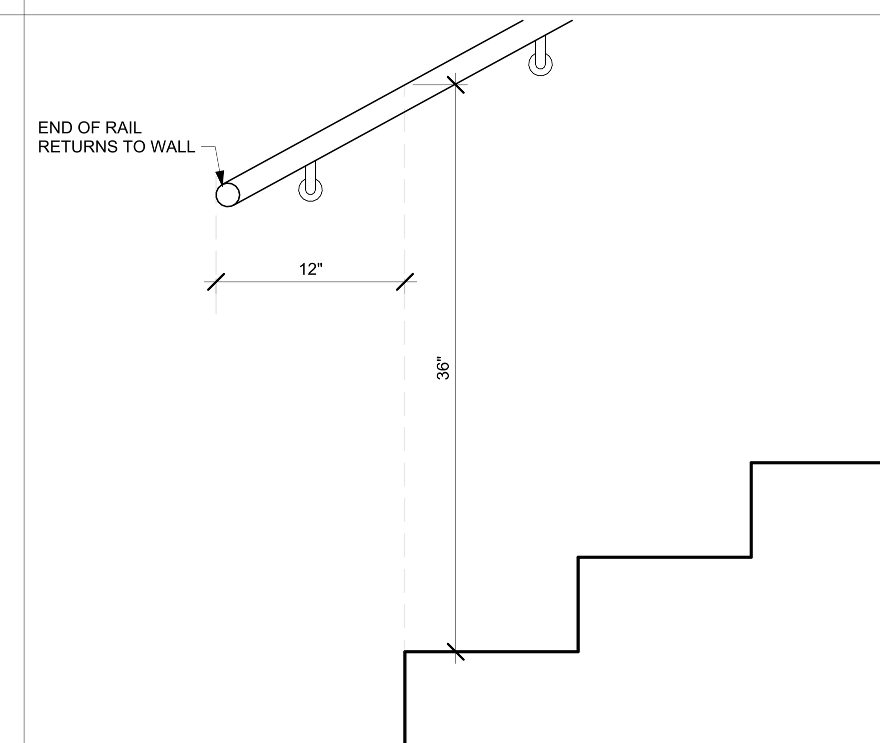

6 A434 LIGHTED HANDRAIL BOTTOM OF STAIRS AGAINST WALL
SCALE : 1 1/2" = 1'-0"

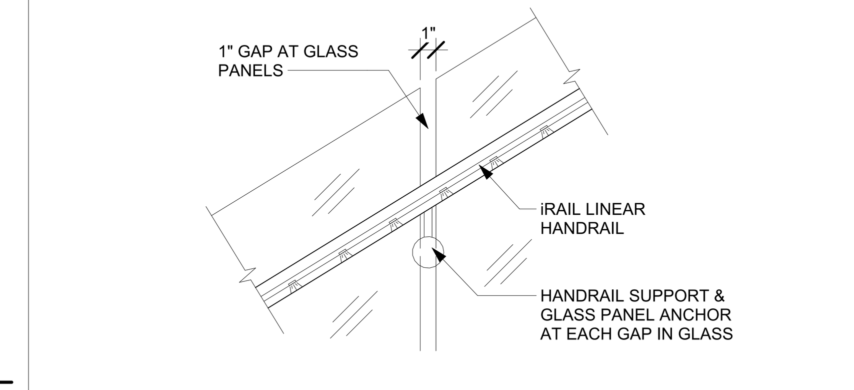

2 A434 STAIR 1 - HANDRAIL SUPPORT
SCALE : 1 1/2" = 1'-0"

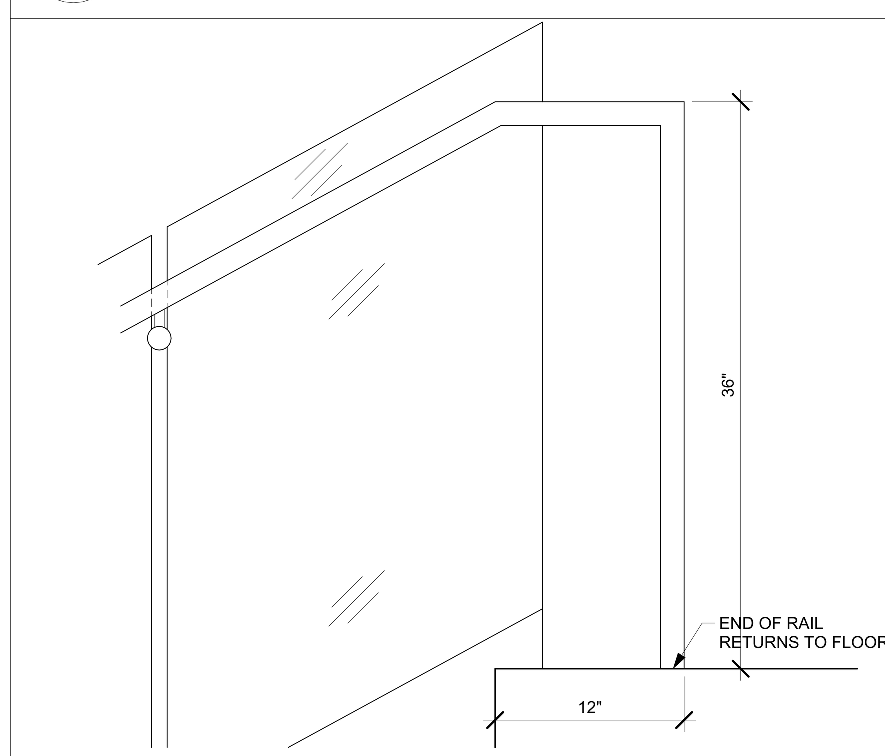

9 A434 LIGHTED HANDRAIL TOP OF STAIRS GLASS GUARDRAIL
SCALE : 1 1/2" = 1'-0"

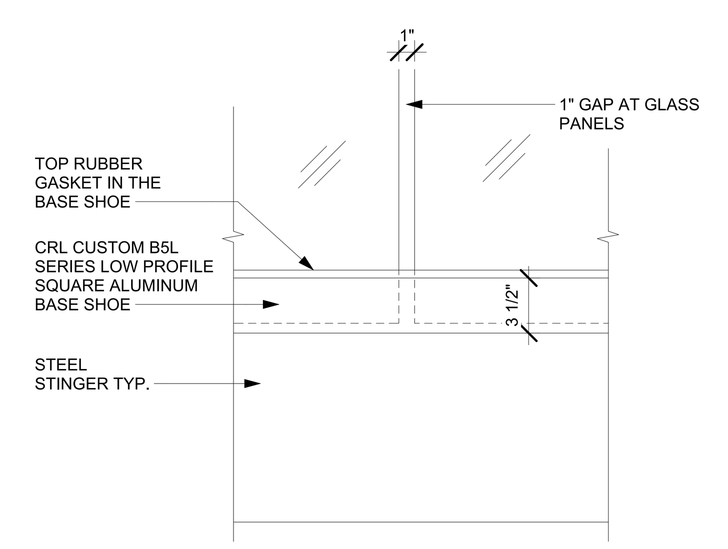

5 A434 GUARDRAIL GLASS SUPPORT
SCALE : 1 1/2" = 1'-0"

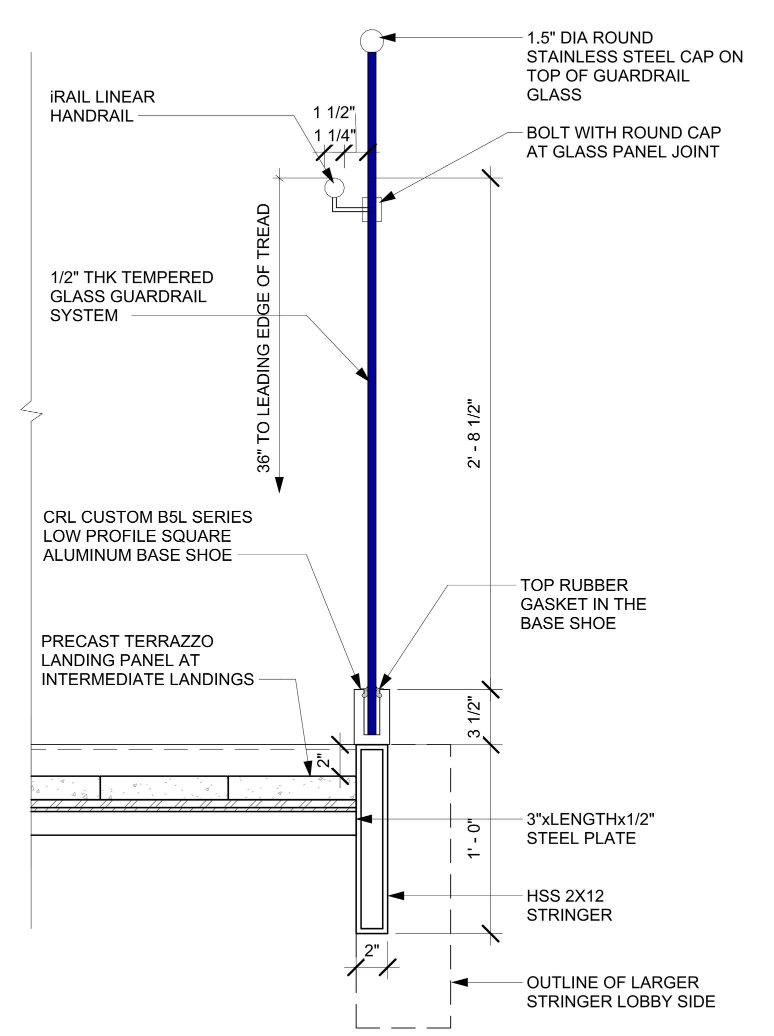

1 A434 STAIR 1- GUARDRAIL EDGE OF DECK
SCALE : 1 1/2" = 1'-0"

FILE PATH: Autodesk Docs://FBC IT Building/FBIT_A23.rvt

PLOT DATE: 5/21/2024 5:05:58 PM

FSGROUP® ARCHITECTS

16575 Village Drive
Houston Texas 77040
713 344 1752 PH
fsdesignbuild.com

PROJECT NAME

THE STATE OF TEXAS FORT BEND COUNTY

INFORMATION TECHNOLGY BUILDING
1419 EUGENE HEIMANN CIRCLE
FORT BEND COUNTY , RICHMOND , TEXAS 77469

CONSULTANTS

PROFESSIONAL SEAL

REGISTERED ARCHITECT FAKHRUDDIN N. SABIR 22631 STATE OF TEXAS
5/15/2024

ISSUED FOR

ISSUED FOR PROPOSALS AND PERMIT

REVISIONS

No.	DESCRIPTION	DATE

KEY PLAN

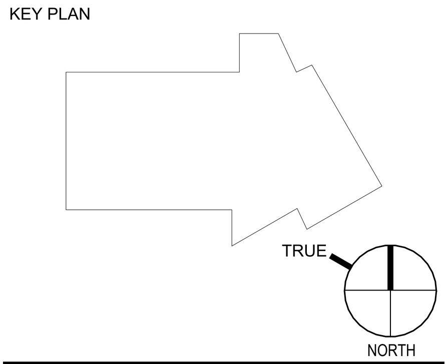

SHEET TITLE

VERTICAL CIRCULATION STAIR 1 DETAILS

SCALE 1 1/2" = 1'-0"

DATE 05/15/2024

PROJECT NUMBER 2319

SHEET NUMBER

A434

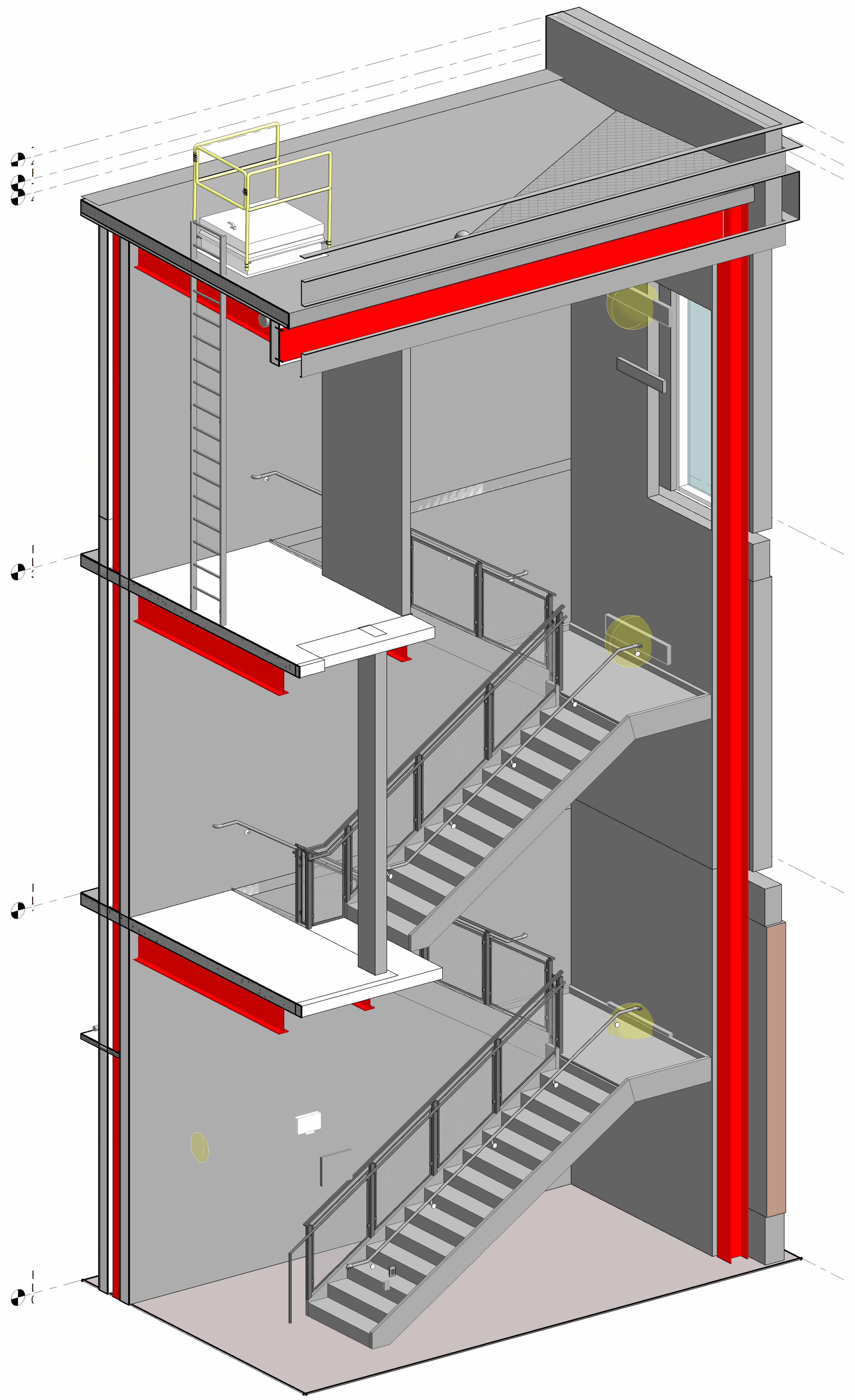

17 A440 STAIR 2 - 3D VIEW
SCALE :

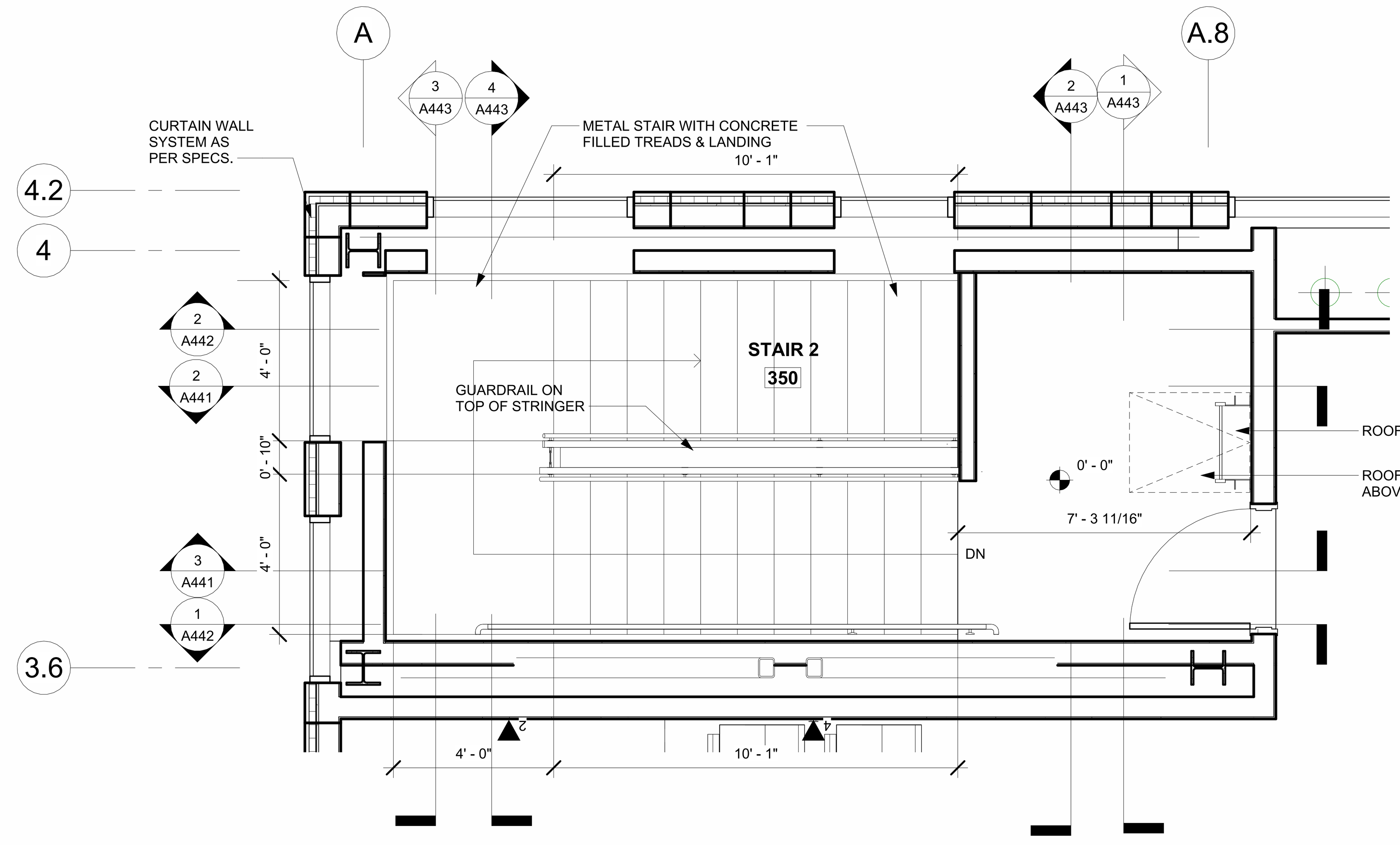

11 A440 ENLG PLAN: STAIR 2 - LEVEL 3
SCALE : 3/8" = 1'-0"

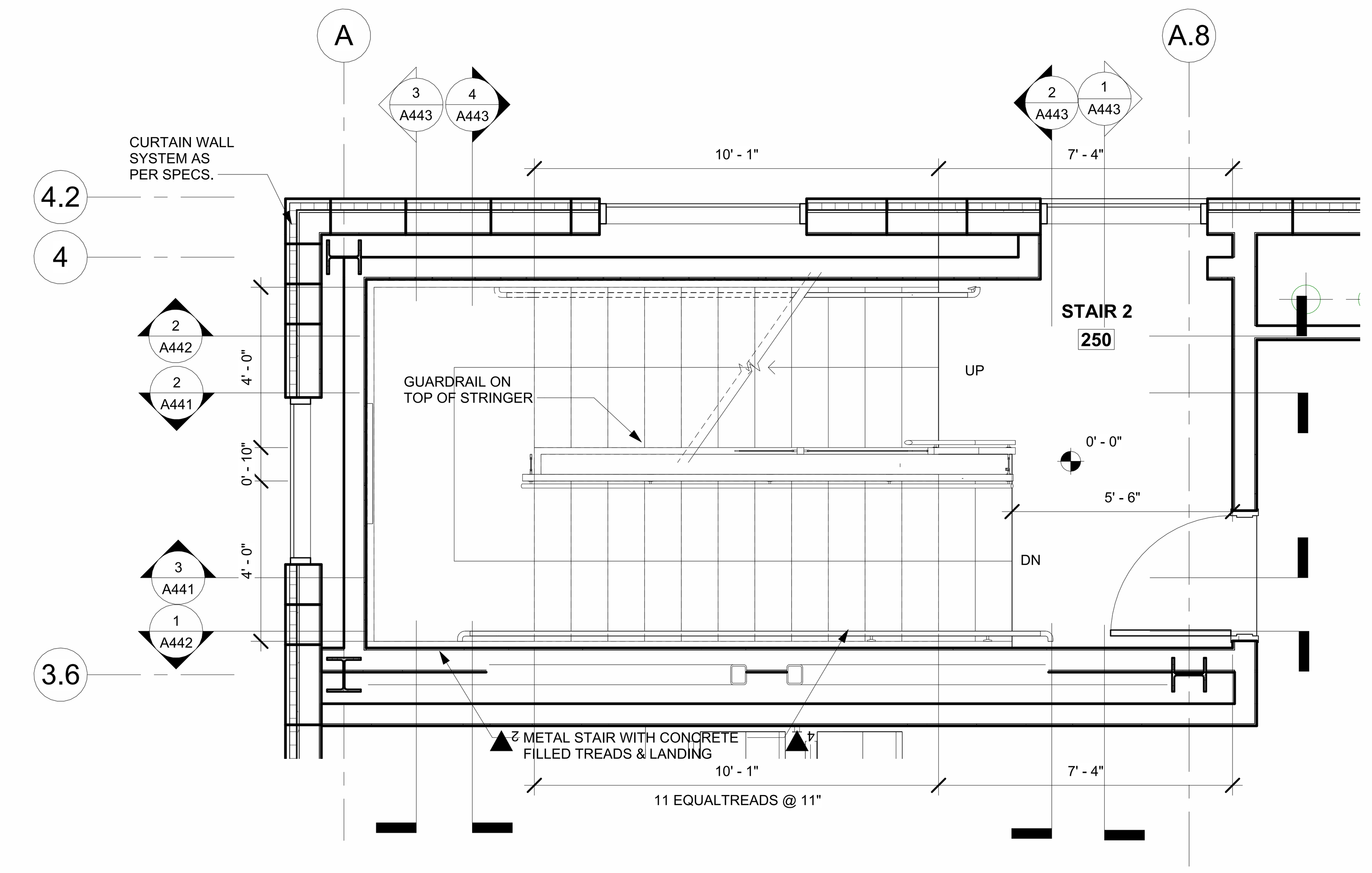

10 A440 ENLG PLAN: STAIR 2 - LEVEL 2
SCALE : 3/8" = 1'-0"

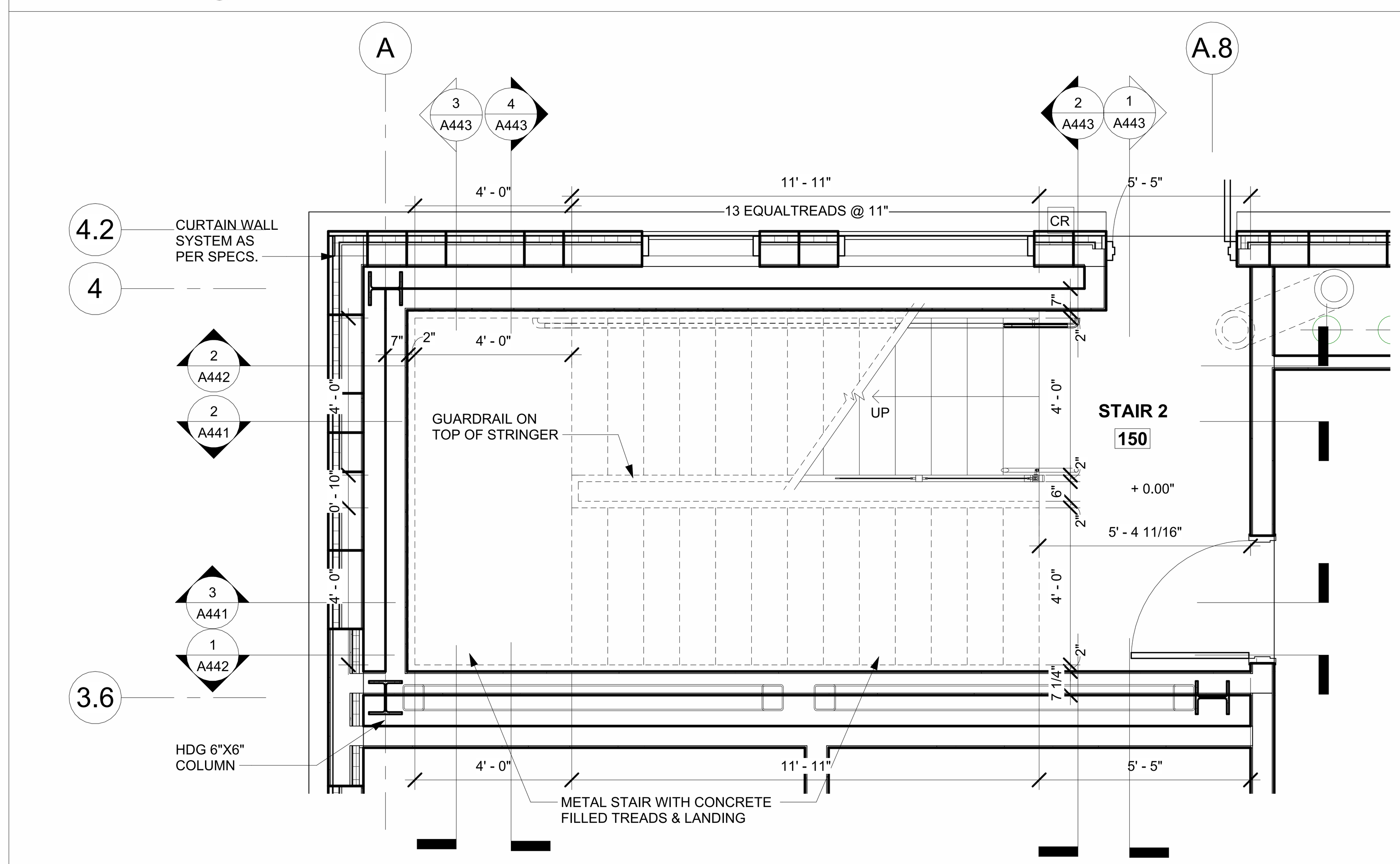

9 A440 ENLG PLAN: STAIR 2 - LEVEL 1
SCALE : 3/8" = 1'-0"

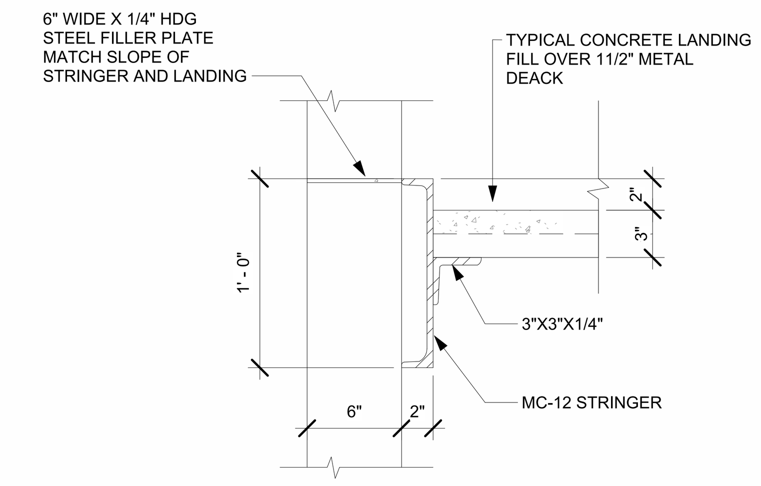

4 A440 STAIR 2- EDGE OF LANDING
SCALE : 1 1/2" = 1'-0"

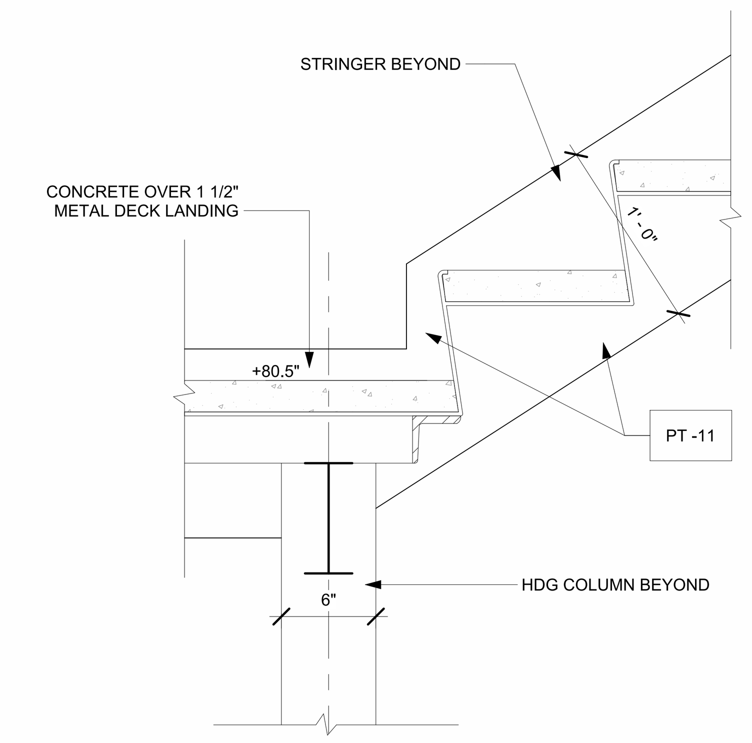

3 A440 STAIR 2- STEPS DOWN TO LANDING
SCALE : 1 1/2" = 1'-0"

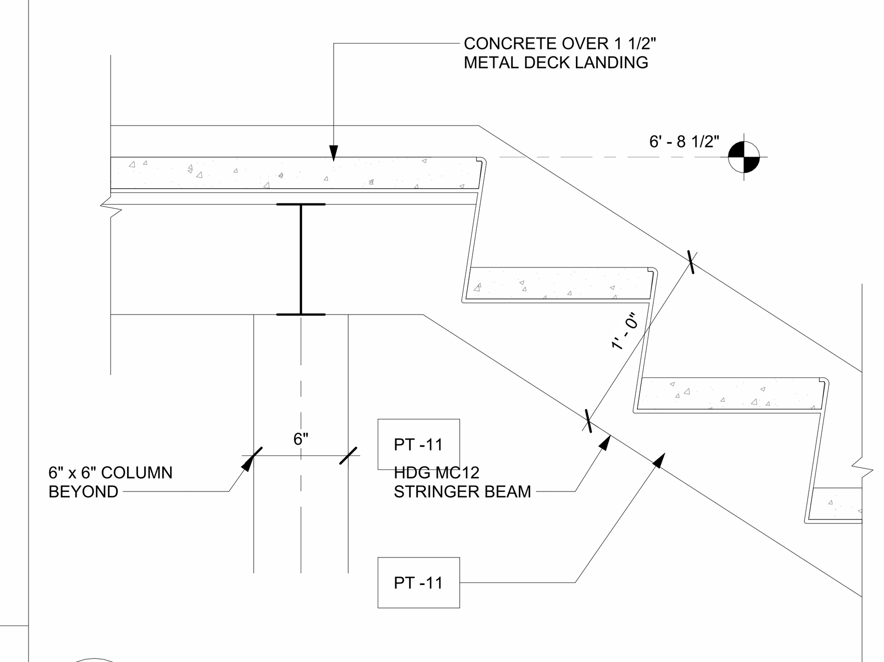

2 A440 STAIR 2- STEPS UP TO LANDING
SCALE : 1 1/2" = 1'-0"

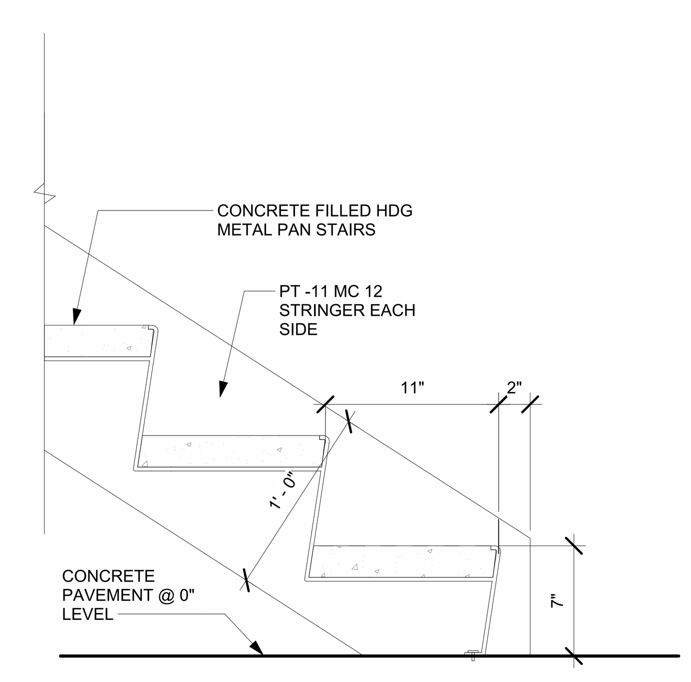

1 A440 STAIR 2- BOTTOM OF STAIRS
SCALE : 1 1/2" = 1'-0"

FILE PATH: Autodesk Docs://FBC IT Building/FBIT_A23.rvt
PLOT DATE: 5/21/2024 5:07:20 PM

FSGROUP ARCHITECTS
16575 Village Drive
Houston Texas 77040
713 344 1752 PH
fsdesignbuild.com

PROJECT NAME

THE STATE OF TEXAS FORT BEND COUNTY

INFORMATION TECHNOLGY BUILDING
1419 EUGENE HEIMANN CIRCLE
FORT BEND COUNTY , RICHMOND , TEXAS 77469

CONSULTANTS

PROFESSIONAL SEAL

REGISTERED ARCHITECT FAKHRUDDIN N SABIR 22631 STATE OF TEXAS
5/15/2024

ISSUED FOR
ISSUED FOR PROPOSALS AND PERMIT

REVISIONS

No.	DESCRIPTION	DATE

KEY PLAN

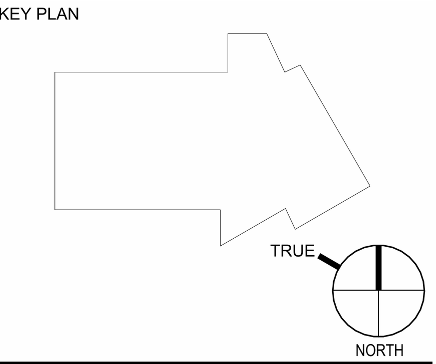

SHEET TITLE
VERTICAL CIRCULATION STAIR 2 ENLG PLANS

SCALE As indicated
DATE 05/15/2024
PROJECT NUMBER 2319

SHEET NUMBER
A440

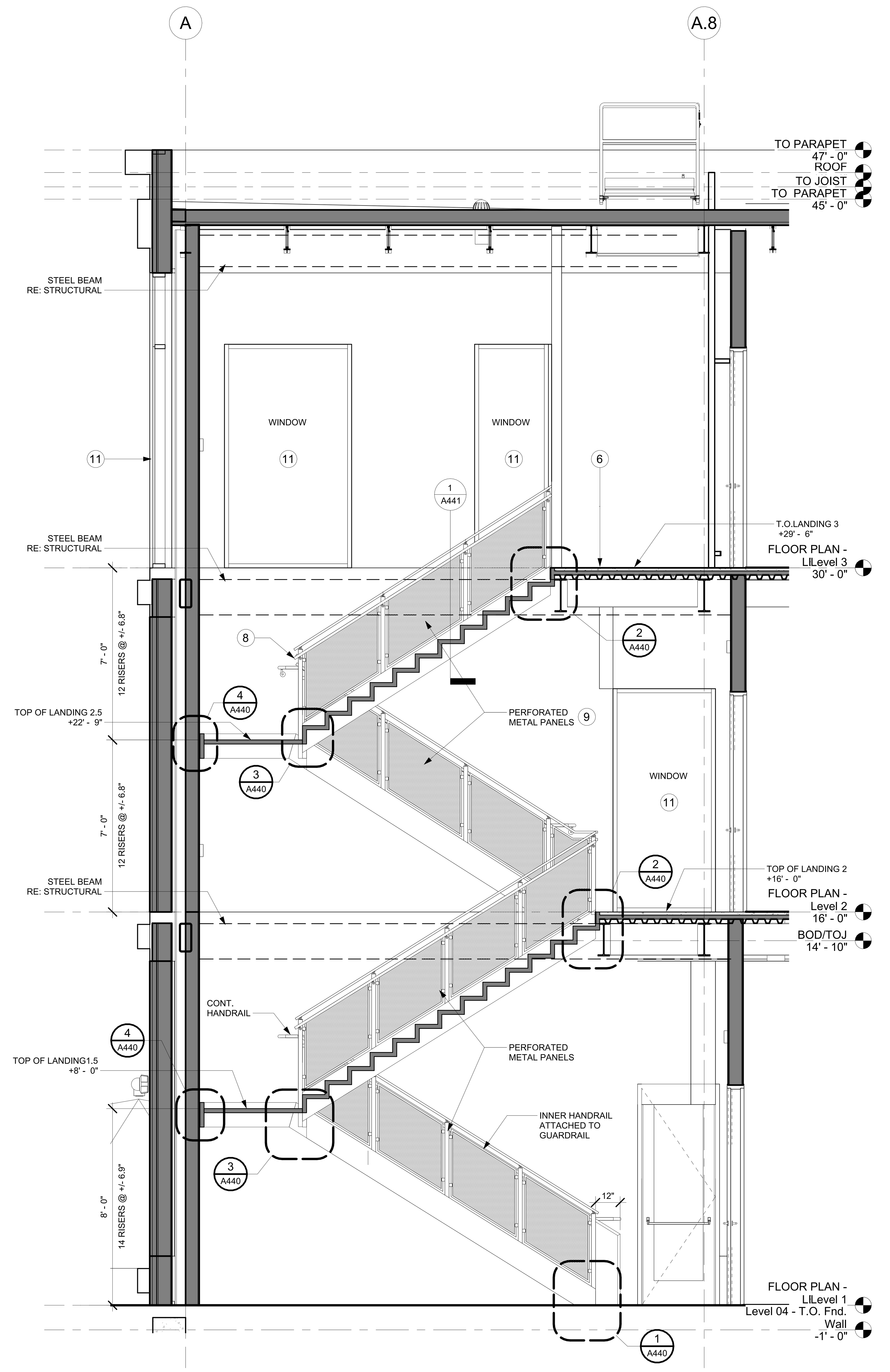

3 A441 STAIR 2 - SECTION 2
SCALE : 3/8" = 1'-0"

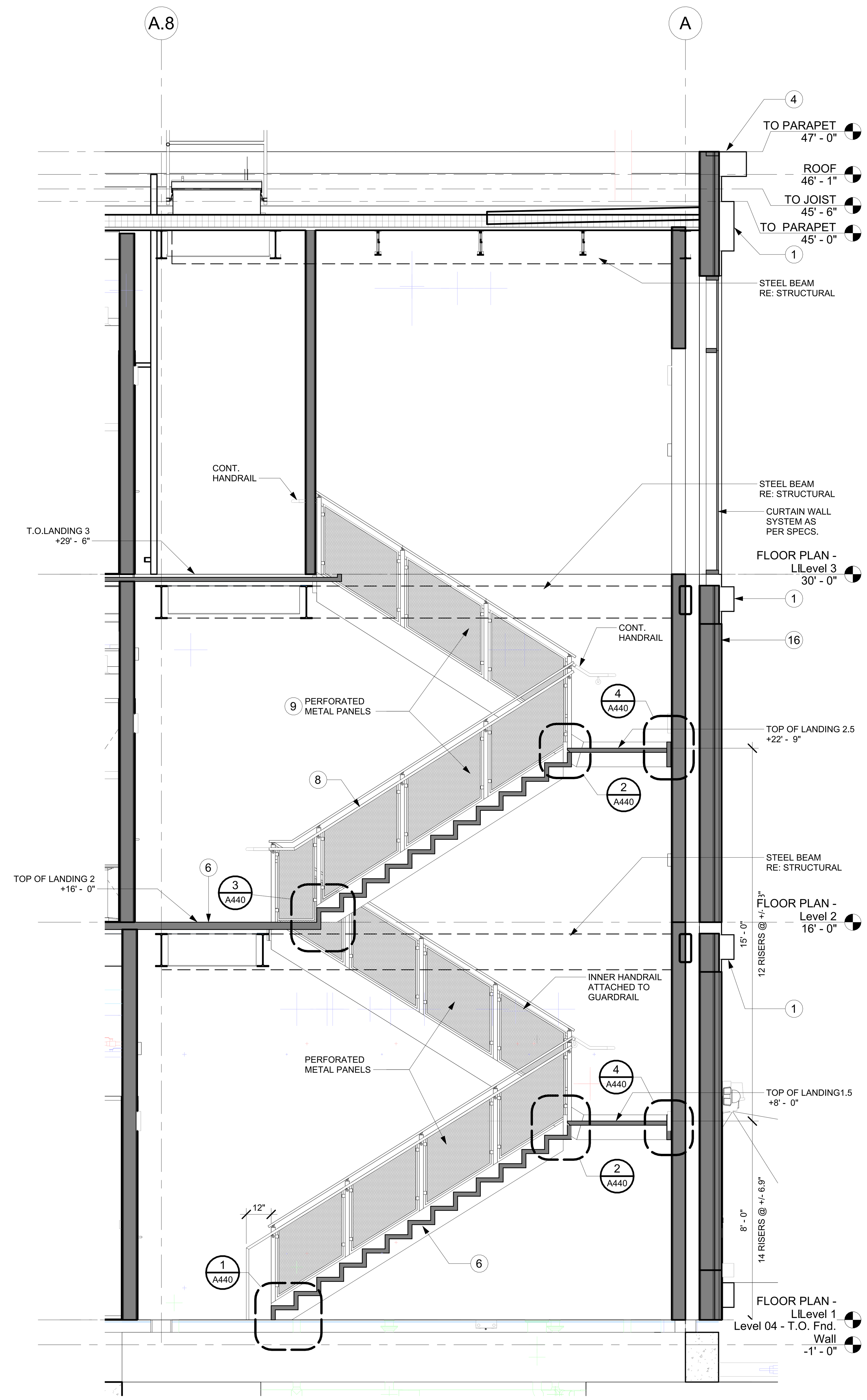

2 A441 STAIR 2 - SECTION 1
SCALE : 3/8" = 1'-0"

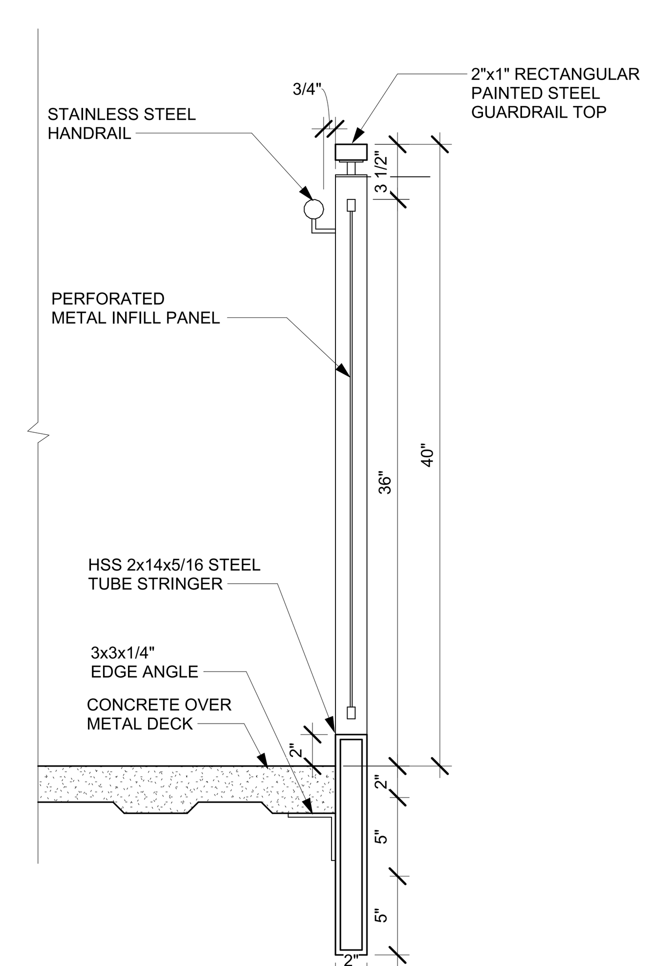

1 A441 STAIR 2 - GUARDRAIL EDGE OF DECK
SCALE : 1 1/2" = 1'-0"

GENERAL NOTES: STAIRS

A STRUCTURAL SYSTEM FOR STAIR SUPPORT SHALL BE INCLUDED AS A DEFERRED SUBMITTAL DESIGNED BY STEEL FABRICATOR, AND SEALED BY A TEXAS STRUCTURAL ENGINEER.

STAIRS : KEY NOTES

1 METAL PANEL BAND.
2 EYEBROW CANOPY.
3 METAL BAND AT PARAPET.
4 METAL PANEL COPING.
5 PERFORATED METAL PANEL.
6 CONCRETE FILLED METAL PAN STAIRS.
7 STAINLESS STEEL HANDRAIL.
8 PREFINISHED ALUMINUM HANDRAIL.
9 PERFORATED STAINLESS STEEL GUARDRAIL INFILL PANEL.
10 GLASS GUARDRAIL SYSTEM.
11 ALUMINUM CURTAINWALL SYSTEM.
12 INSULATED VISION GLAZING.
13 INSULATED SPANDREL GLAZING.
14 TPO MEMBRANE ROOFING, WRAPS AROUND UPPER BAND.
15 ELEVATOR SHAFT WITH FIRE-RATED ENCLOSURE.
16 METAL PANEL WALL SYSTEM.
17 FEATURE METAL PANEL WALL.
18 THERMAL FIBERGLASS INSULATION.
19 MINERAL WOOL INSULATION.
20 5/8" GYPSUM BOARD SHEATHING.
21 5/8" GYPSUM BOARD.
22 FLUID APPLIED AIR AND WATER RESISTIVE BARRIER.
23 6" METAL STUDS.
24 CONCRETE SLAB ON METAL DECK. RE STRUCTURE.
25 COLUMN . REF STRUCTURE.
26 BEAM. REF STRUCTURE.
27 CONCRETE FOUNDATION SLAB. RE STRUCTURE.
28 CEILING.
29 JOIST. RE STRUCTURE.
30 SUBFRAME TO SUPPORT METAL PANEL SYSTEM.
31 PRESSURE TREATED WOOD BLOCKING.
32 STUD TRACK.
33 EYEBROW CANOPY LIGHT.
34 ROOF COVER SHEATHING.
35 CONTINOUS HORIZONTAL WALL SUPPORT. RE : STRUCTURE.
36 EMBED PLATE. RE : STRUCTURE.
37 Z GIRTS.
38 STEEL POST. RE: STRUCTURE.
39 PLYWOOD SHEATHING
40 1-HOUR FIRE RATED GLAZING SYSTEM AT LEVEL 3 LANDING
41 1-HOUR FIRE RATED PARTITION
42 1-HOUR FIRE PROTECTION AT FLOOR-CEILING ASSEMBLY

FSGROUP®
ARCHITECTS
16575 Village Drive
Houston Texas 77040
713 344 1752 PH
fsdesignbuild.com

PROJECT NAME

INFORMATION TECHNOLGY BUILDING
1419 EUGENE HEIMANN CIRCLE
FORT BEND COUNTY . RICHMOND . TEXAS 77469

CONSULTANTS

PROFESSIONAL SEAL

5/15/2024

ISSUED FOR
ISSUED FOR PROPOSALS AND PERMIT

REVISIONS

No.	DESCRIPTION	DATE

KEY PLAN

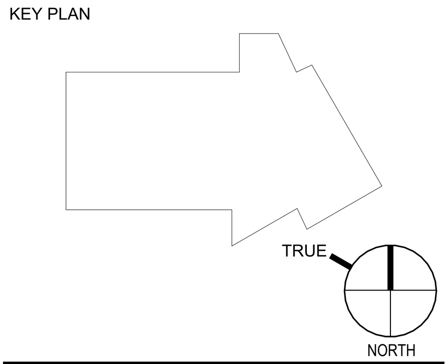

SHEET TITLE
VERTICAL CIRCULATION STAIR 2 SECTIONS

SCALE As indicated
DATE 05/15/2024
PROJECT NUMBER 2319
SHEET NUMBER
A441

FILE PATH: Autodesk Docs://FBC IT Building/FBIT_A23.rvt
PLOT DATE: 5/22/2024 4:31:26 PM

GENERAL NOTES: STAIRS

A STRUCTURAL SYSTEM FOR STAIR SUPPORT SHALL BE INCLUDED AS A DEFERRED SUBMITTAL DESIGNED BY STEEL FABRICATOR, AND SEALED BY A TEXAS STRUCTURAL ENGINEER.

STAIRS : KEY NOTES

1 METAL PANEL BAND.
2 EYEBROW CANOPY.
3 METAL BAND AT PARAPET.
4 METAL PANEL COPING.
5 PERFORATED METAL PANEL.
6 CONCRETE FILLED METAL PAN STAIRS.
7 STAINLESS STEEL HANDRAIL.
8 PREFINISHED ALUMINUM HANDRAIL.
9 PERFORATED STAINLESS STEEL GUARDRAIL INFILL PANEL.
10 GLASS GUARDRAIL SYSTEM.
11 ALUMINUM CURTAINWALL SYSTEM.
12 INSULATED VISION GLAZING.
13 INSULATED SPANDREL GLAZING.
14 TPO MEMBRANE ROOFING, WRAPS AROUND UPPER BAND.
15 ELEVATOR SHAFT WITH FIRE-RATED ENCLOSURE.
16 METAL PANEL WALL SYSTEM.
17 FEATURE METAL PANEL WALL.
18 THERMAL FIBERGLASS INSULATION.
19 MINERAL WOOL INSULATION.
20 5/8" GYPSUM BOARD SHEATHING.
21 5/8" GYPSUM BOARD.
22 FLUID APPLIED AIR AND WATER RESISTIVE BARRIER.
23 6" METAL STUDS.
24 CONCRETE SLAB ON METAL DECK. RE STRUCTURE.
25 COLUMN . REF STRUCTURE.
26 BEAM. REF STRUCTURE.
27 CONCRETE FOUNDATION SLAB. RE STRUCTURE.
28 CEILING.
29 JOIST. RE STRUCTURE.
30 SUBFRAME TO SUPPORT METAL PANEL SYSTEM.
31 PRESSURE TREATED WOOD BLOCKING.
32 STUD TRACK.
33 EYEBROW CANOPY LIGHT.
34 ROOF COVER SHEATHING.
35 CONTINOUS HORIZONTAL WALL SUPPORT. RE : STRUCTURE.
36 EMBED PLATE. RE : STRUCTURE.
37 Z GIRTS.
38 STEEL POST. RE: STRUCTURE.
39 PLYWOOD SHEATHING
40 1-HOUR FIRE RATED GLAZING SYSTEM AT LEVEL 3 LANDING
41 1-HOUR FIRE RATED PARTITION
42 1-HOUR FIRE PROTECTION AT FLOOR-CEILING ASSEMBLY

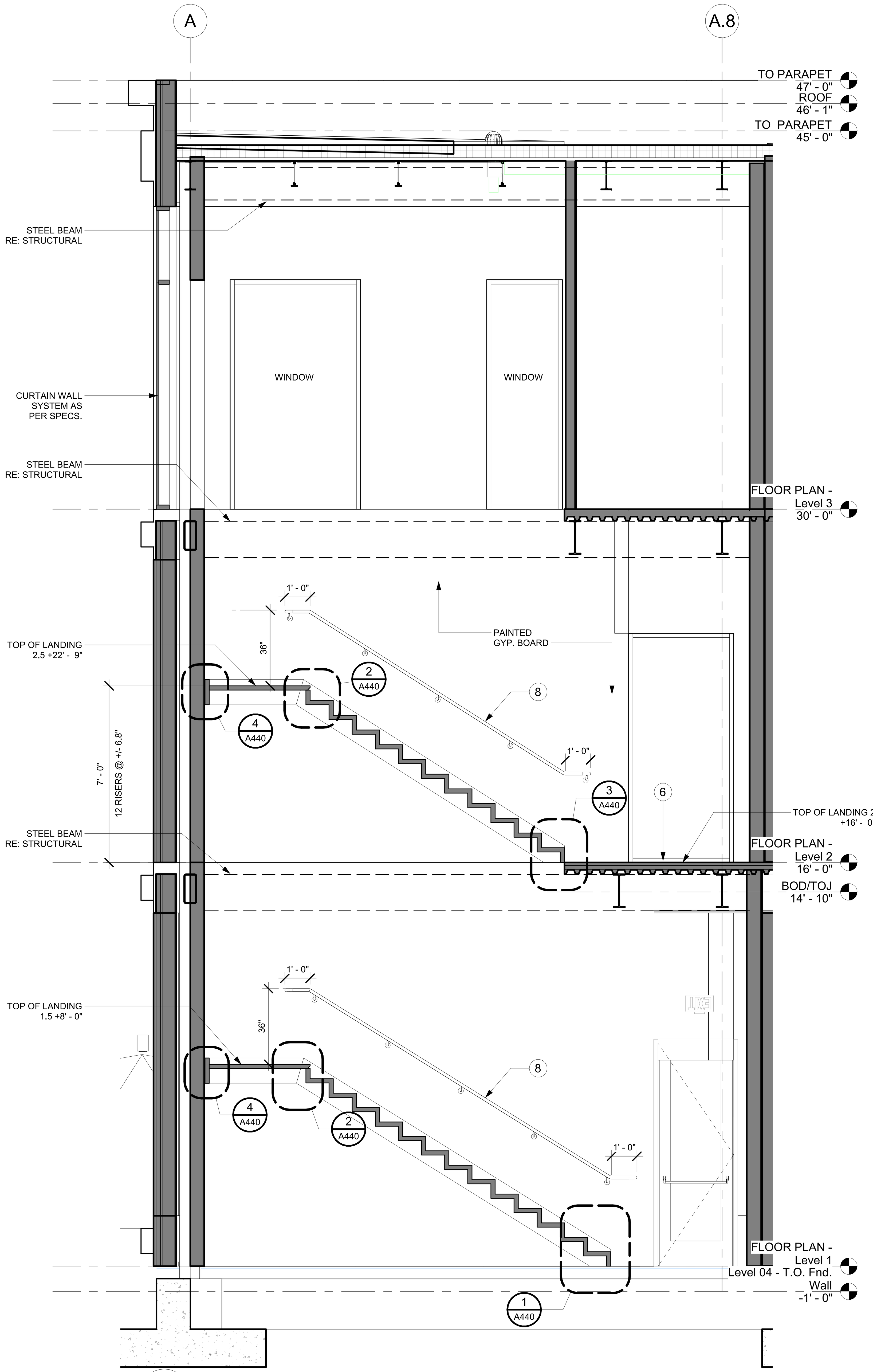

2 A442 STAIR 2 - SECTION 4
SCALE : 3/8" = 1'-0"

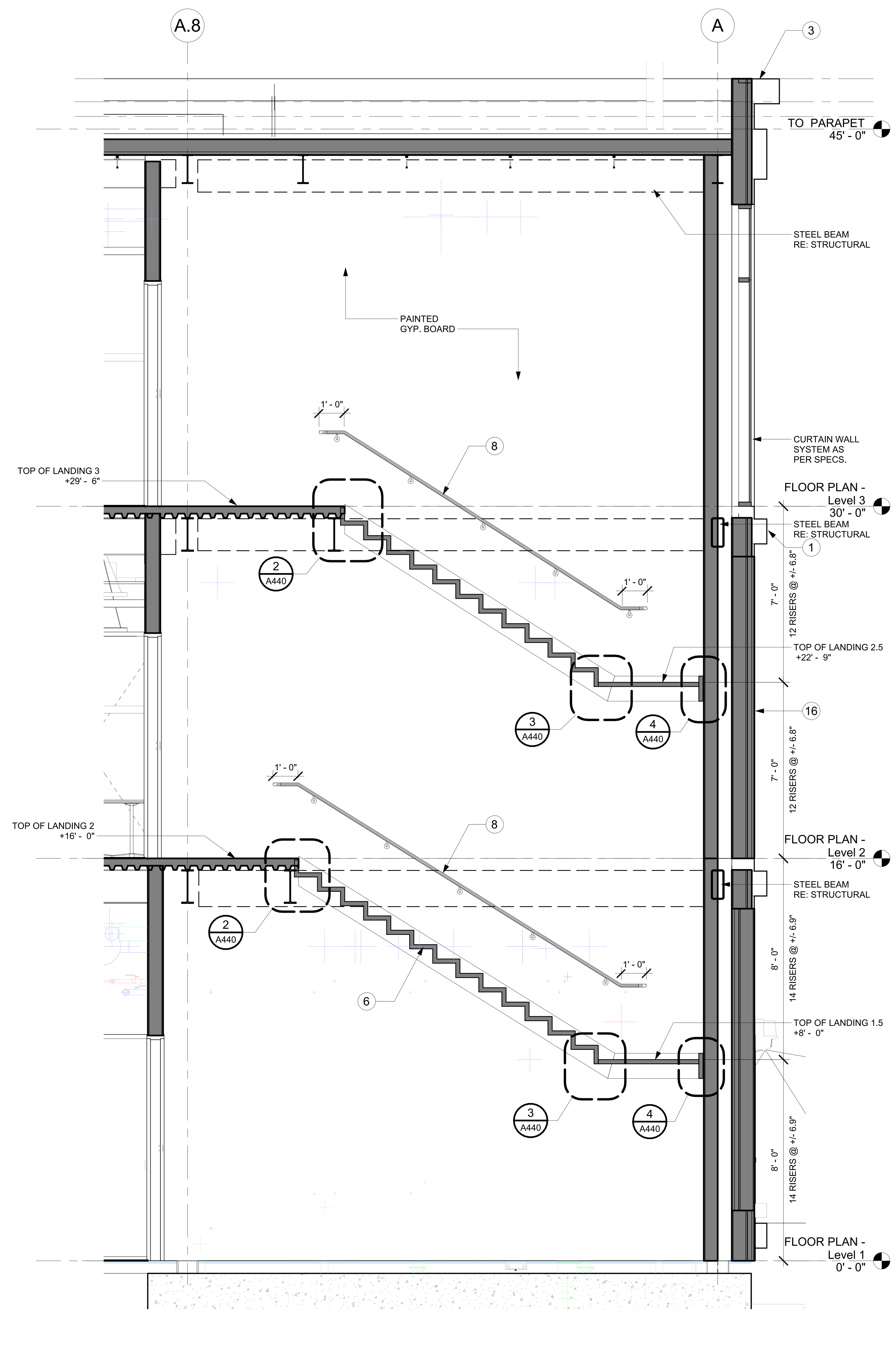

1 A442 STAIR 2 - SECTION 3
SCALE : 3/8" = 1'-0"

FILE PATH: Autodesk Docs://FBC IT Building/FBIT_A23.rvt

PLOT DATE: 5/22/2024 4:39:41 PM

FSGROUP ARCHITECTS
16575 Village Drive
Houston Texas 77040
713 344 1752 PH
fsdesignbuild.com

PROJECT NAME

INFORMATION TECHNOLGY BUILDING
1419 EUGENE HEIMANN CIRCLE
FORT BEND COUNTY . RICHMOND . TEXAS 77469

CONSULTANTS

PROFESSIONAL SEAL

ISSUED FOR

ISSUED FOR PROPOSALS AND PERMIT

REVISIONS

No.	DESCRIPTION	DATE

KEY PLAN

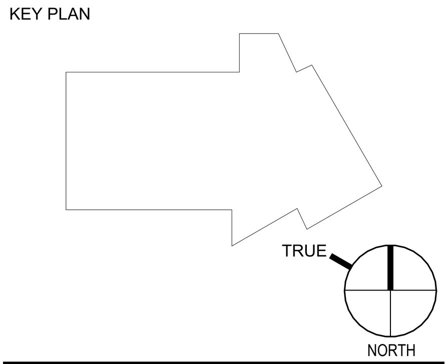

SHEET TITLE

VERTICAL CIRCULATION STAIR 2 SECTIONS

SCALE: As indicated

DATE: 05/15/2024

PROJECT NUMBER: 2319

SHEET NUMBER

A442

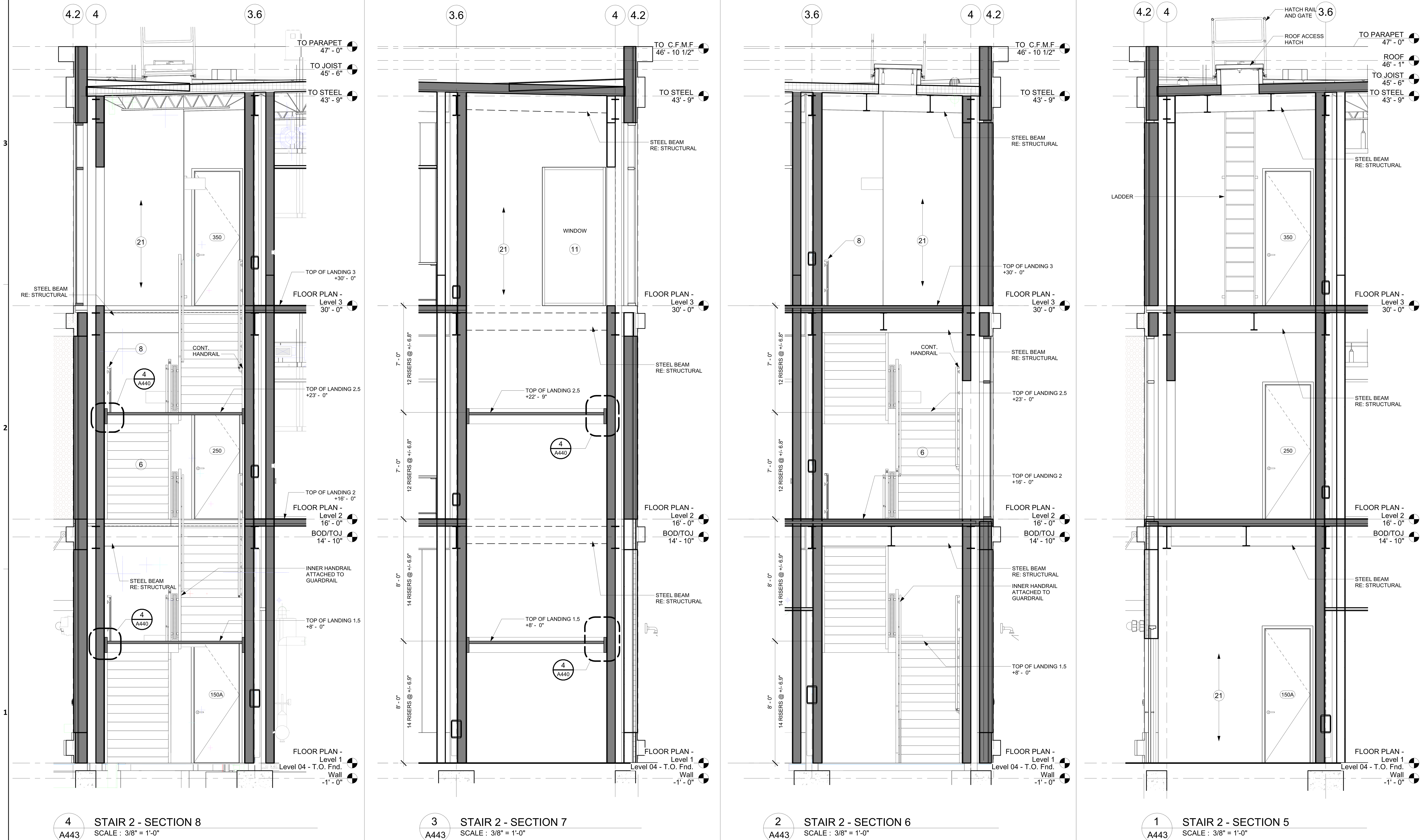

FILE PATH: Autodesk Docs://FBC IT Building/FBIT_A23.rvt

PLOT DATE: 5/22/2024 4:42:58 PM

FSGROUP® ARCHITECTS
16575 Village Drive
Houston Texas 77040
713 344 1752 PH
fsdesignbuild.com

PROJECT NAME

INFORMATION TECHNOLGY BUILDING
1419 EUGENE HEIMANN CIRCLE
FORT BEND COUNTY . RICHMOND . TEXAS 77469

CONSULTANTS

PROFESSIONAL SEAL

ISSUED FOR

ISSUED FOR PROPOSALS AND PERMIT

REVISIONS

No.	DESCRIPTION	DATE

KEY PLAN

SHEET TITLE

VERTICAL CIRCULATION STAIR 2 SECTIONS

SCALE	3/8" = 1'-0"
DATE	05/15/2024
PROJECT NUMBER	2319

SHEET NUMBER

A443

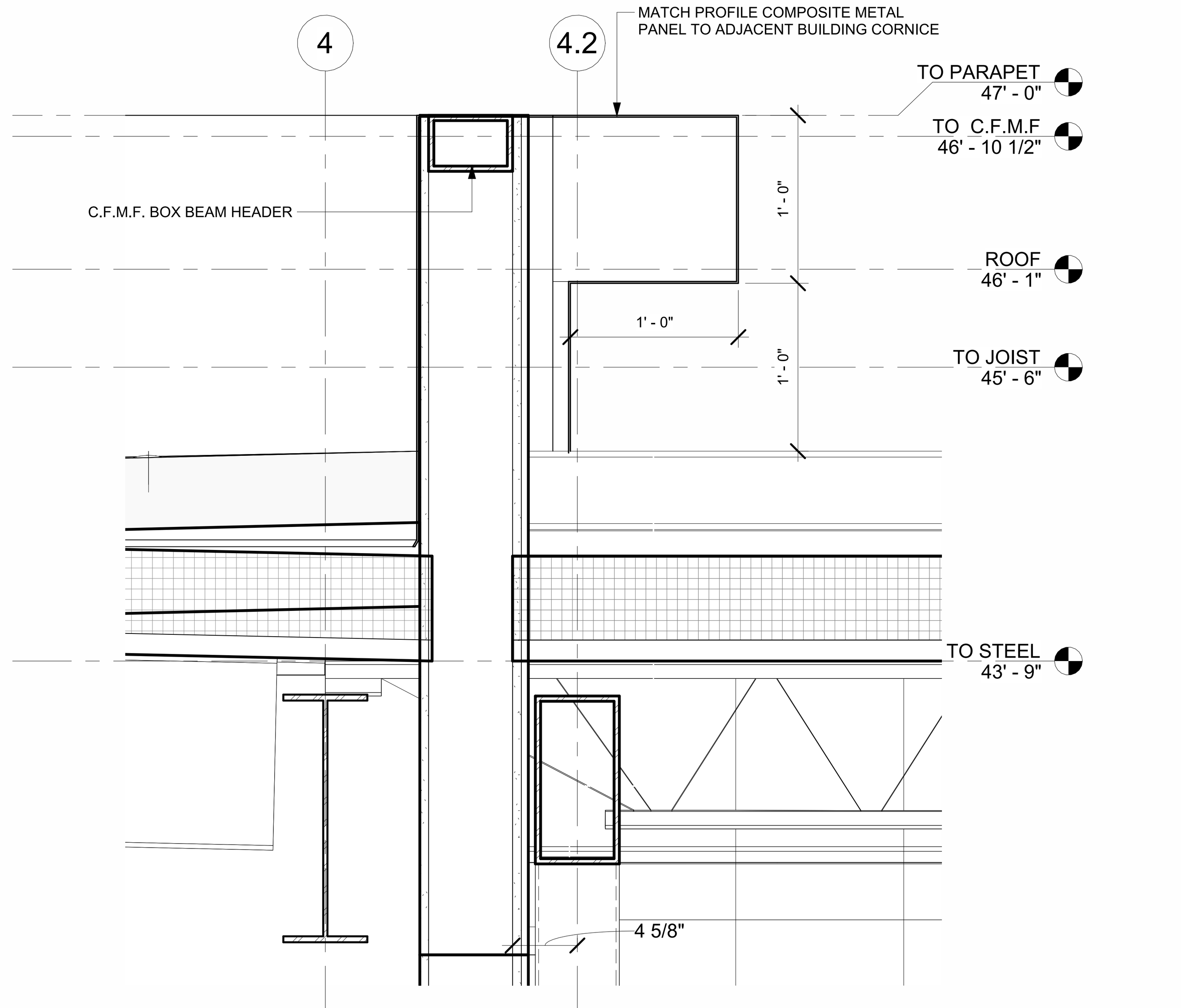

20 A450 STAIR 3 - TRANSITION AT MAIN ROOF
SCALE : 1 1/2" = 1'-0"

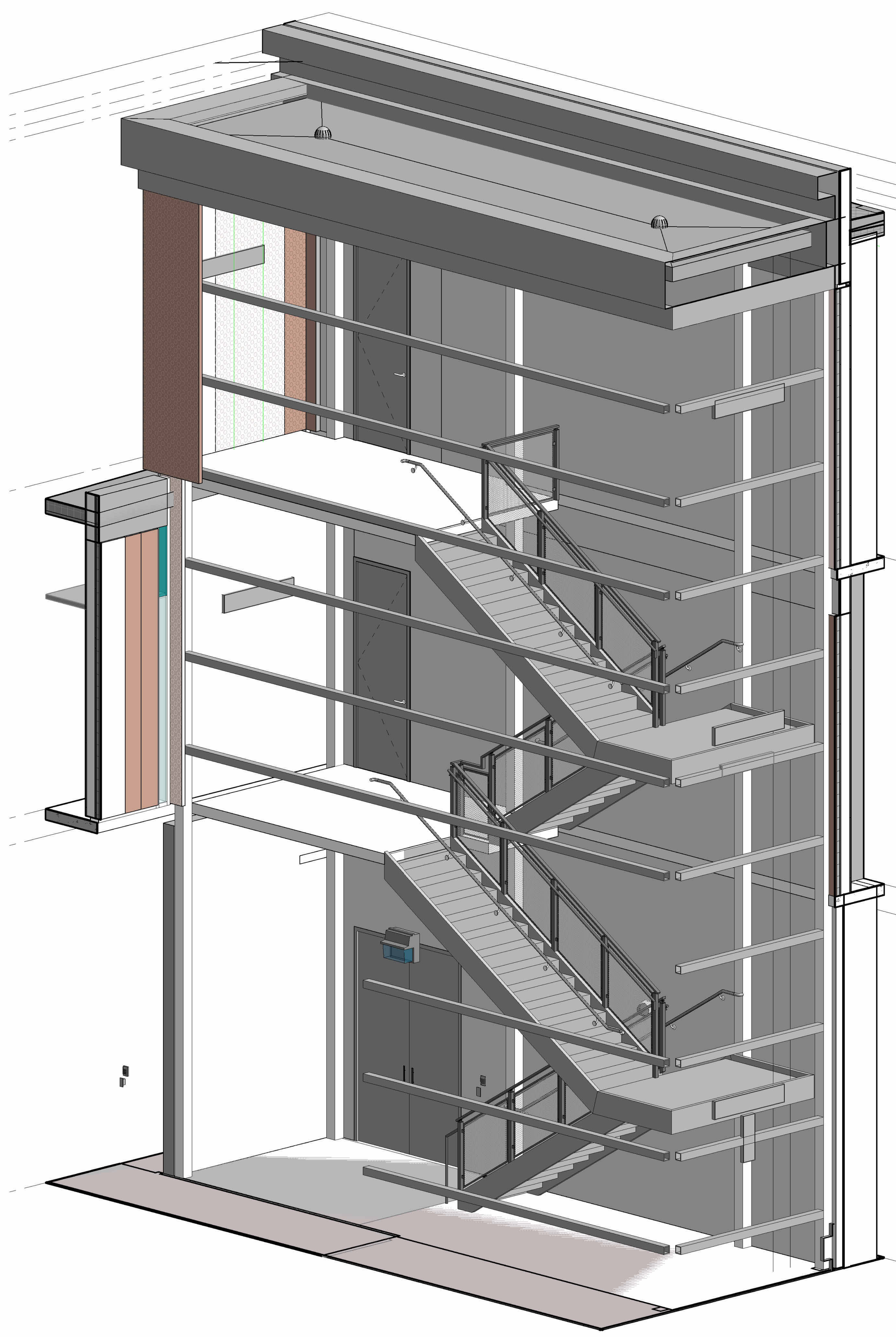

17 A450 STAIR 3 - 3D VIEW
SCALE :

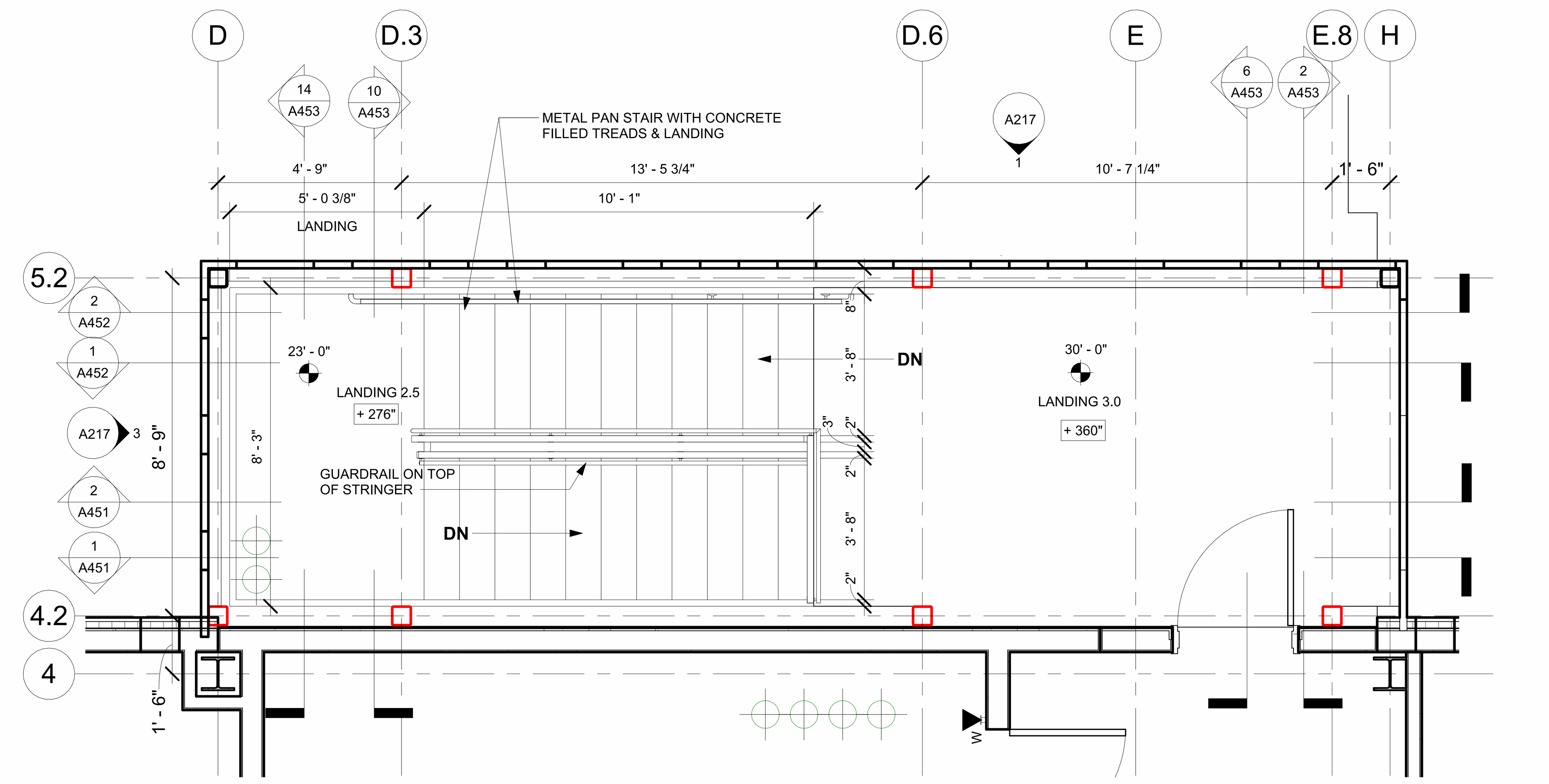

11 A450 ENLG PLAN: STAIR 3 - LEVEL 3
SCALE : 3/8" = 1'-0"

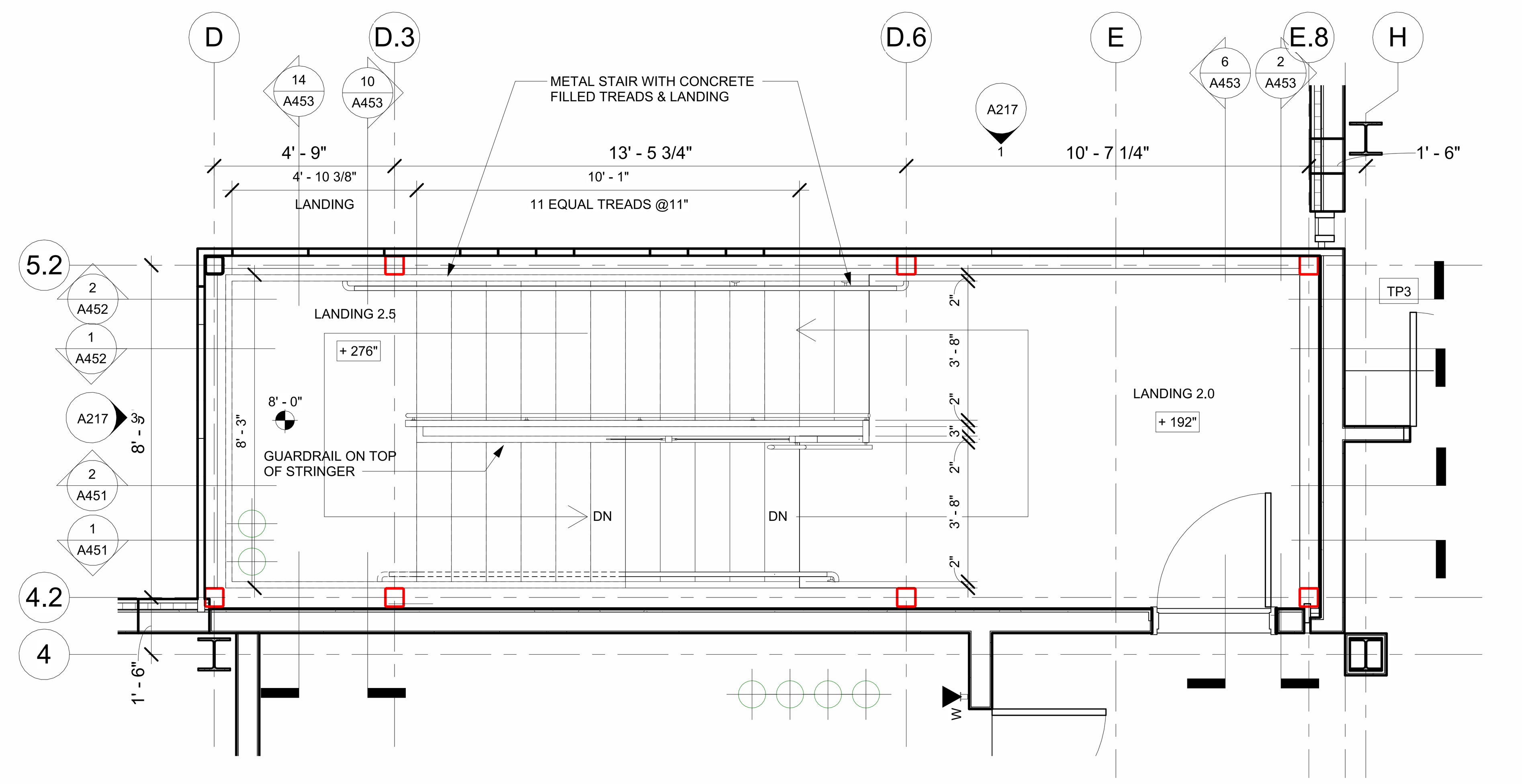

10 A450 ENLG PLAN: STAIR 3 - LEVEL 2
SCALE : 3/8" = 1'-0"

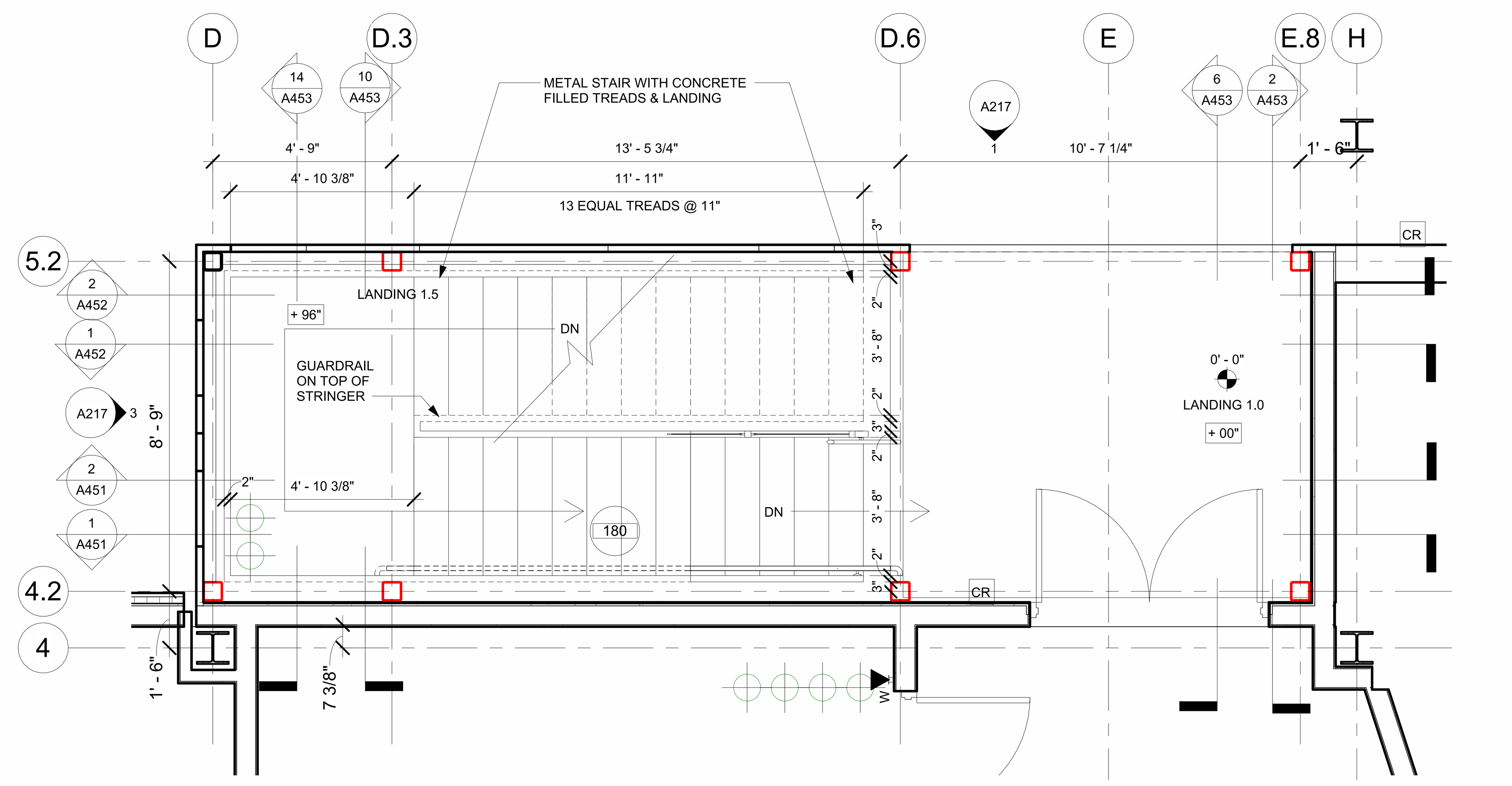

9 A450 ENLG PLAN: STAIR 3 - LEVEL 1
SCALE : 3/8" = 1'-0"

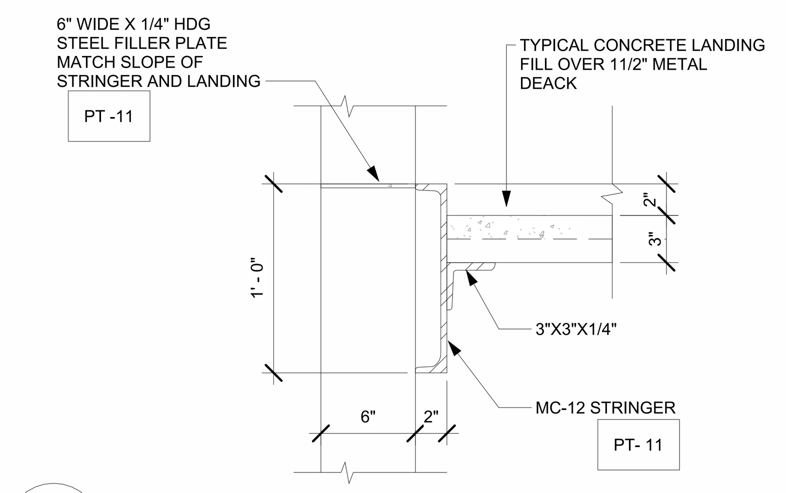

4 A450 STAIR 2 - EDGE OF LANDING
SCALE : 1 1/2" = 1'-0"

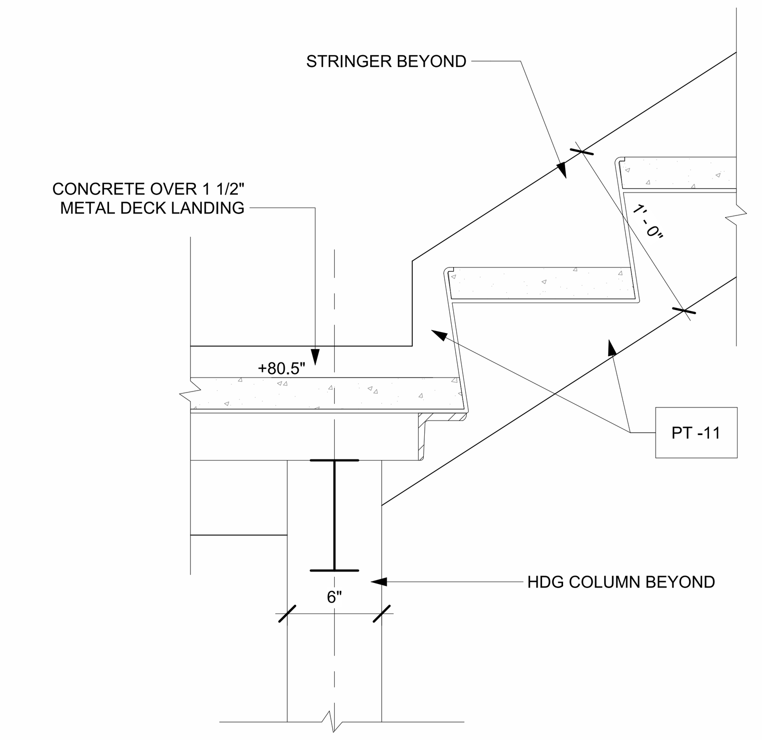

3 A450 STAIR 2 - STEPS DOWN TO LANDING
SCALE : 1 1/2" = 1'-0"

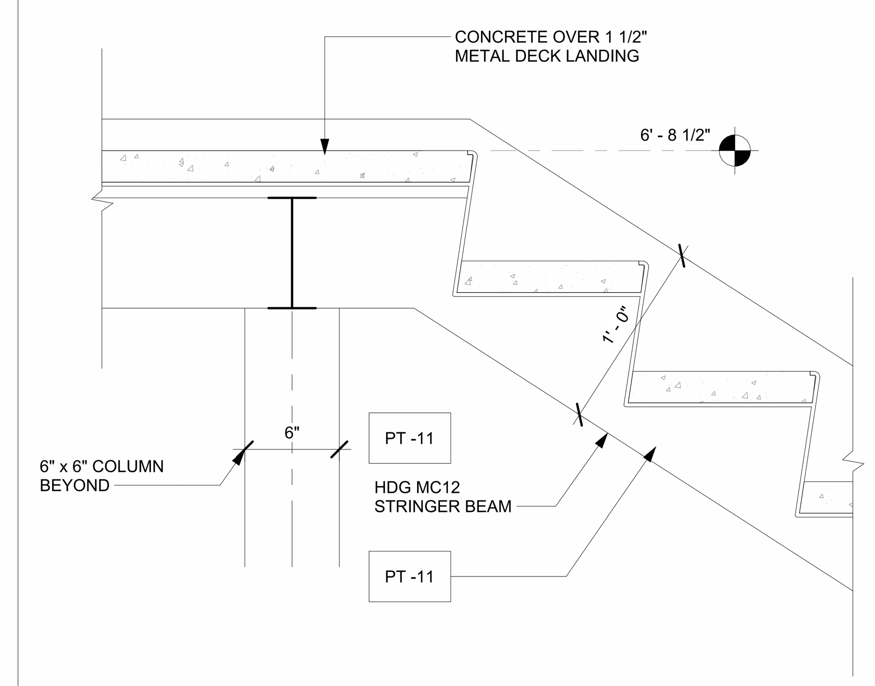

2 A450 STAIR 2 - STEPS UP TO LANDING
SCALE : 1 1/2" = 1'-0"

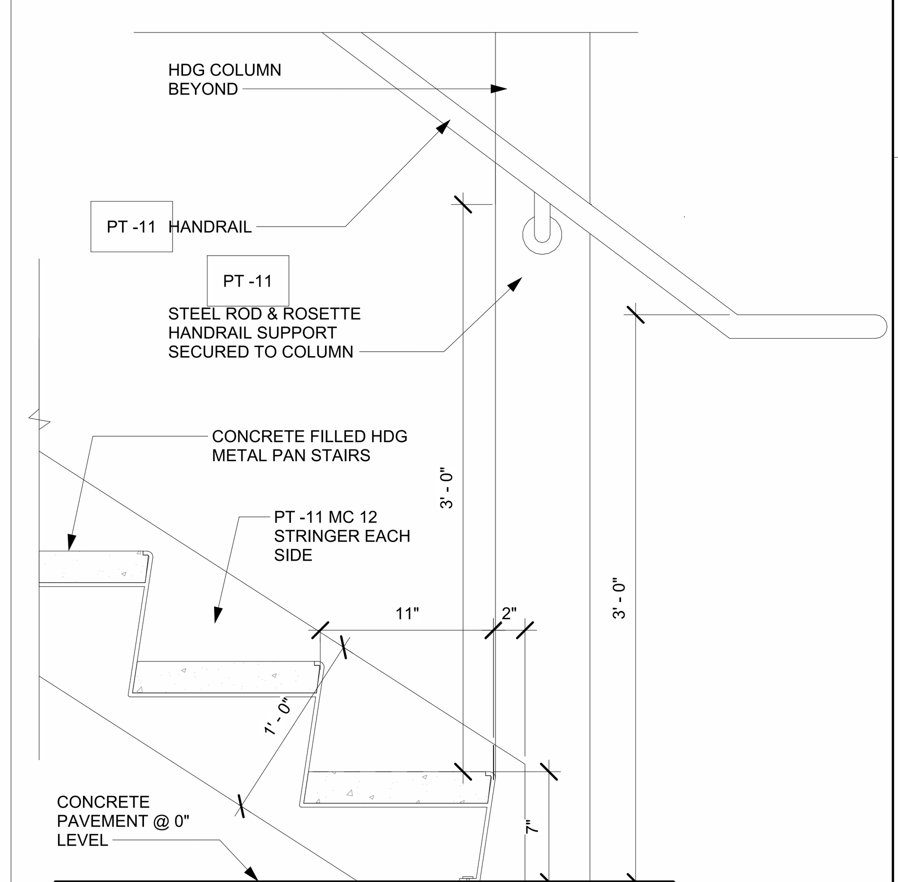

1 A450 STAIR 2- BOTTOM OF STAIR
SCALE : 1 1/2" = 1'-0"

FILE PATH: Autodesk Docs://FBC IT Building/FBIT_A23.rvt
PLOT DATE: 5/21/2024 5:07:49 PM

FSGROUP ARCHITECTS
16575 Village Drive
Houston Texas 77040
713 344 1752 PH
fsdesignbuild.com

PROJECT NAME

INFORMATION TECHNOLGY BUILDING
1419 EUGENE HEIMANN CIRCLE
FORT BEND COUNTY . RICHMOND . TEXAS 77469

CONSULTANTS

PROFESSIONAL SEAL

ISSUED FOR
ISSUED FOR PROPOSALS AND PERMIT

REVISIONS

No.	DESCRIPTION	DATE

KEY PLAN

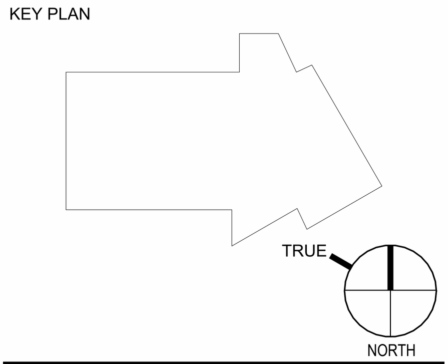

SHEET TITLE
VERTICAL CIRCULATION STAIR 3 ENLG PLANS

SCALE: As indicated
DATE: 05/15/2024
PROJECT NUMBER: 2319
SHEET NUMBER: A450

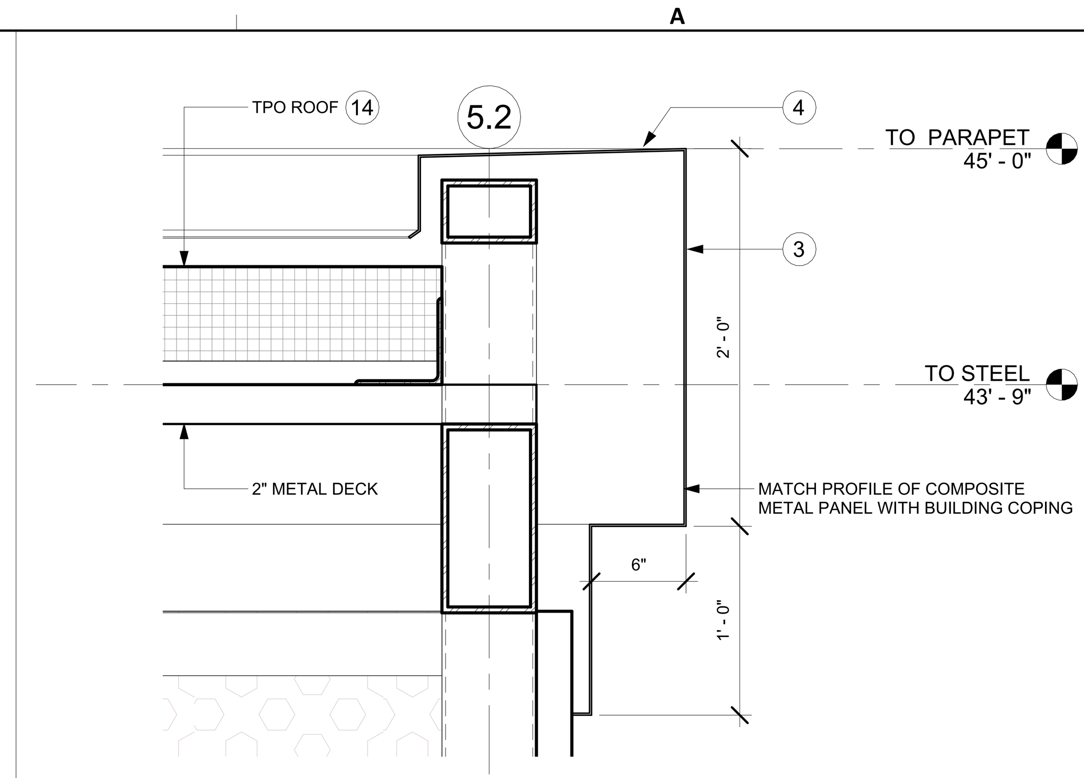

3 A451 STAIR 3 - COPING AT 3 SIDES
SCALE : 1 1/2" = 1'-0"

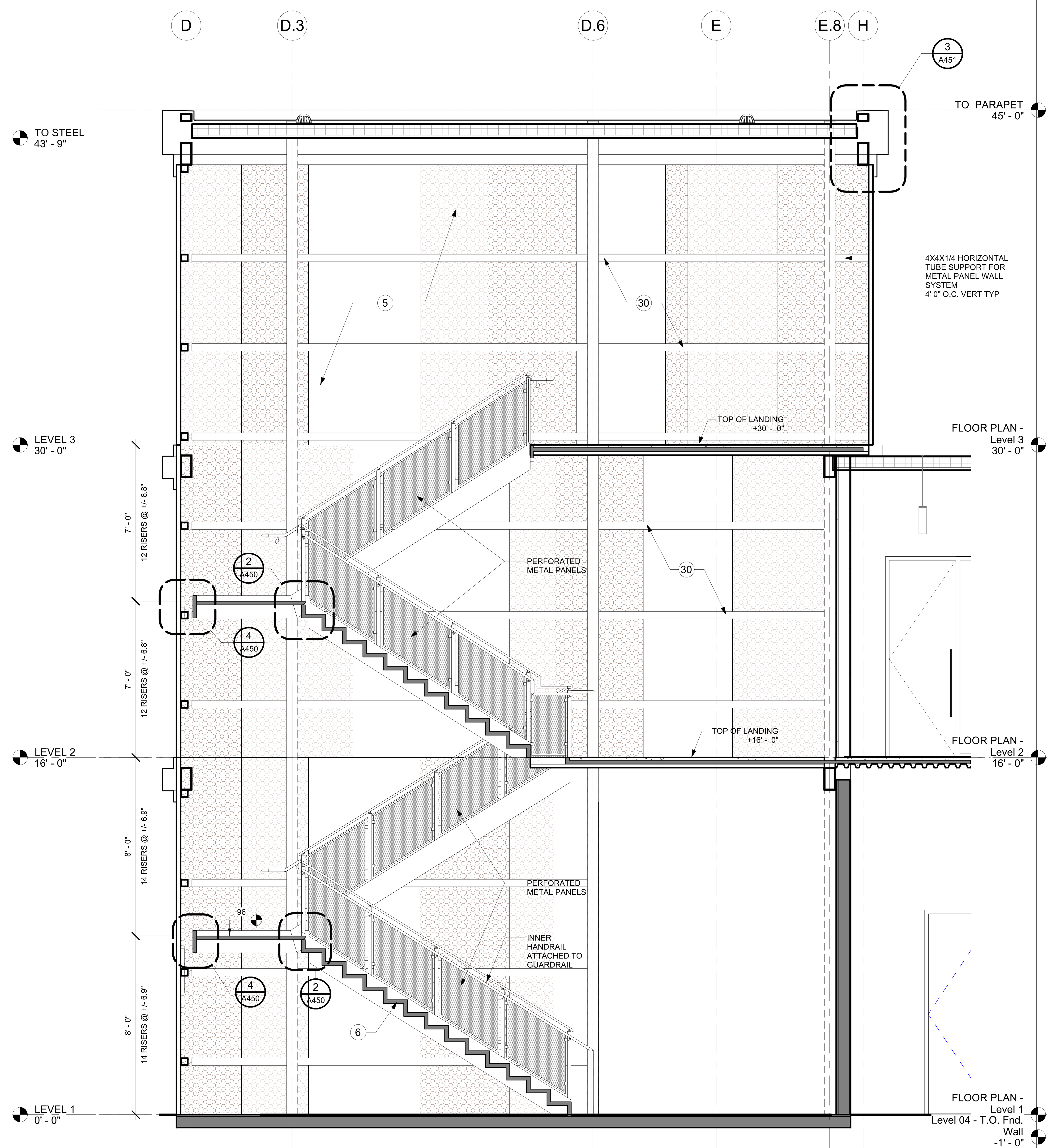

2 A451 STAIR 3 - SECTION 2
SCALE : 3/8" = 1'-0"

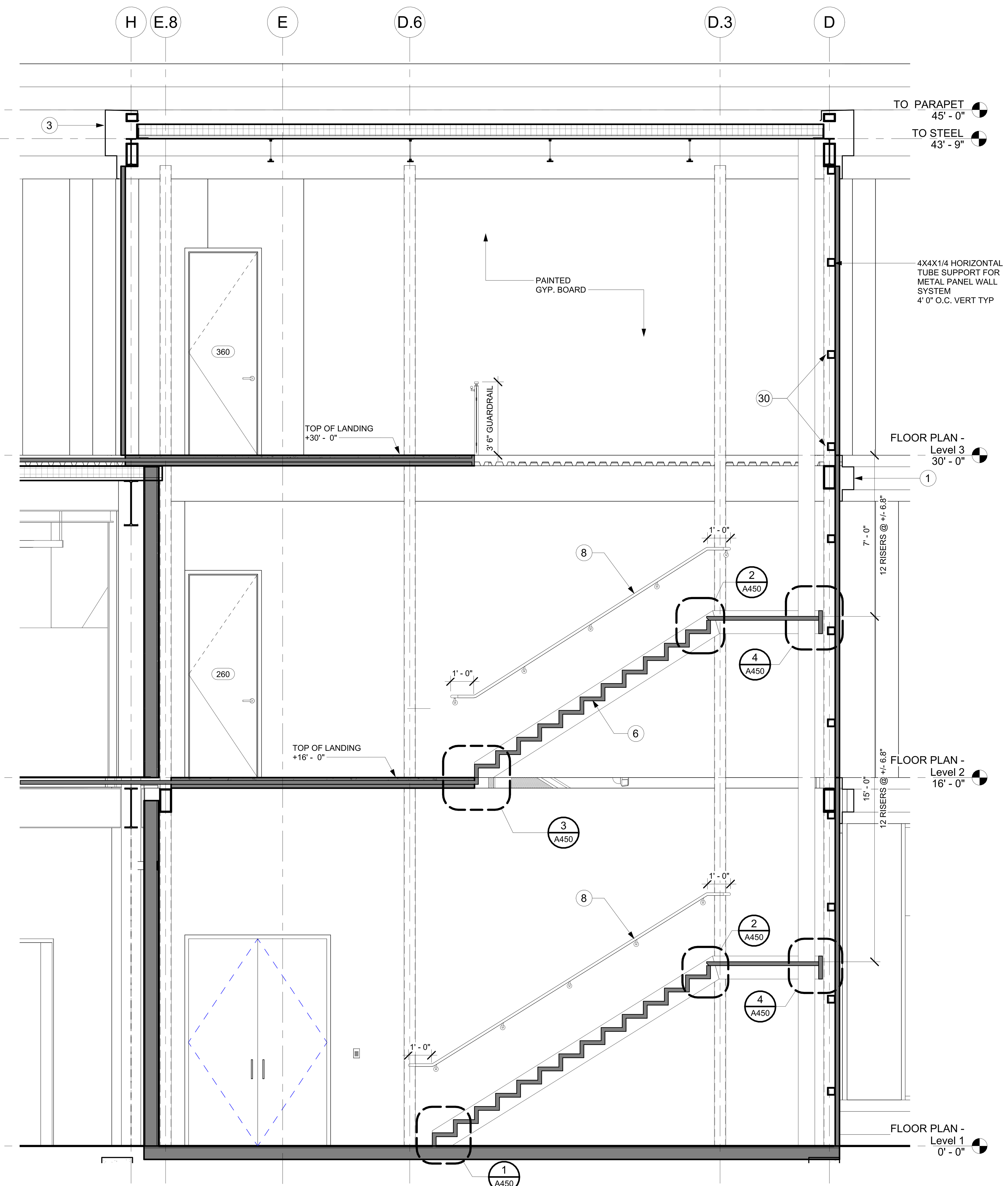

1 A451 STAIR 3 - SECTION 1
SCALE : 3/8" = 1'-0"

FILE PATH: Autodesk Docs://FBC IT Building/FBIT_A23.rvt

PLOT DATE: 5/22/2024 4:15:05 PM

FSGROUP ARCHITECTS
16575 Village Drive
Houston Texas 77040
713 344 1752 PH
fsdesignbuild.com

PROJECT NAME

INFORMATION TECHNOLGY BUILDING
1419 EUGENE HEIMANN CIRCLE
FORT BEND COUNTY . RICHMOND . TEXAS 77469

CONSULTANTS

PROFESSIONAL SEAL

5/15/2024

ISSUED FOR

ISSUED FOR PROPOSALS AND PERMIT

REVISIONS

No.	DESCRIPTION	DATE

KEY PLAN

TRUE NORTH

SHEET TITLE

VERTICAL CIRCULATION STAIR 3 SECTIONS

SCALE: As indicated

DATE: 05/15/2024

PROJECT NUMBER: 2319

SHEET NUMBER

A451

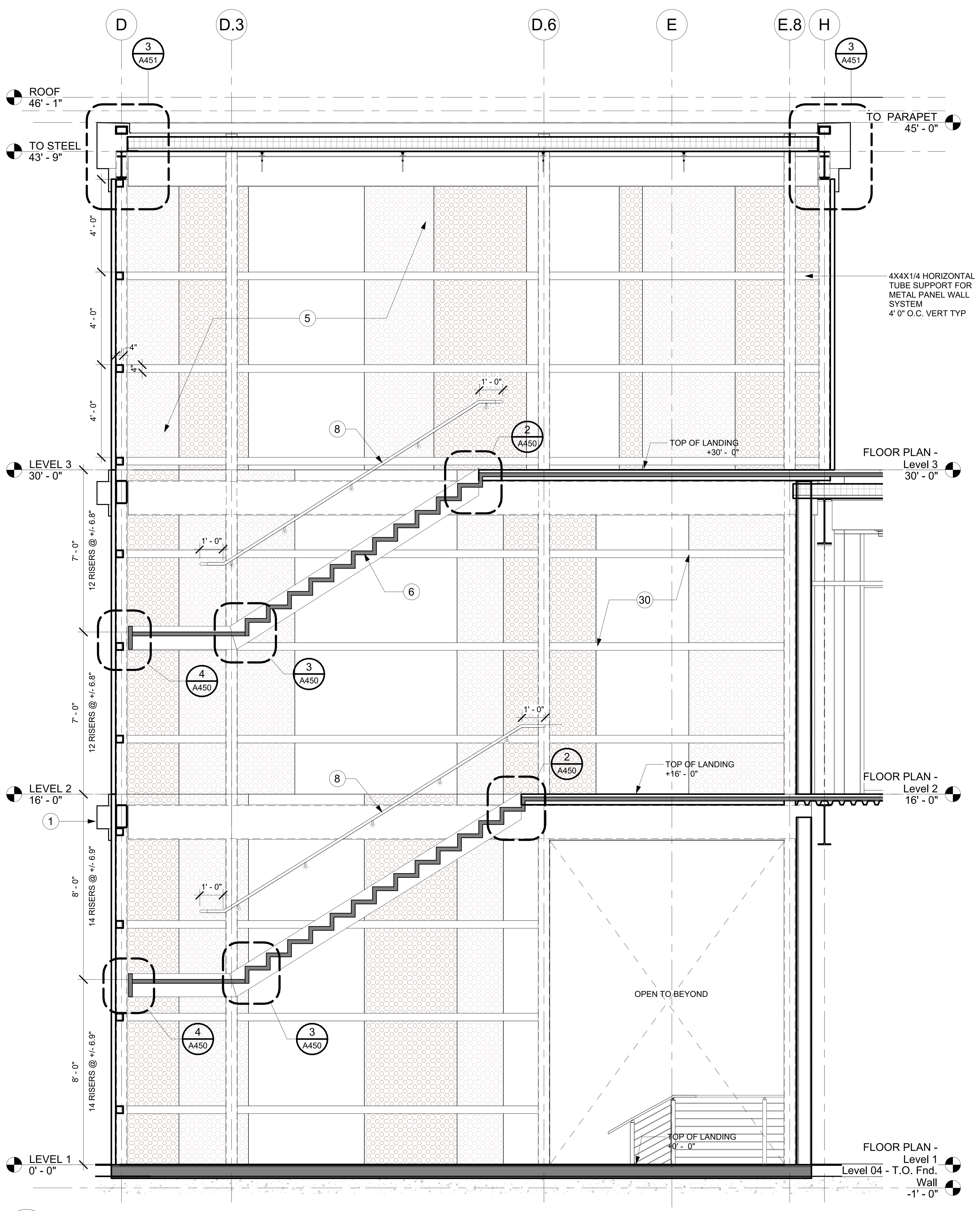

2 A452 STAIR 3 - SECTION 4
SCALE : 3/8" = 1'-0"

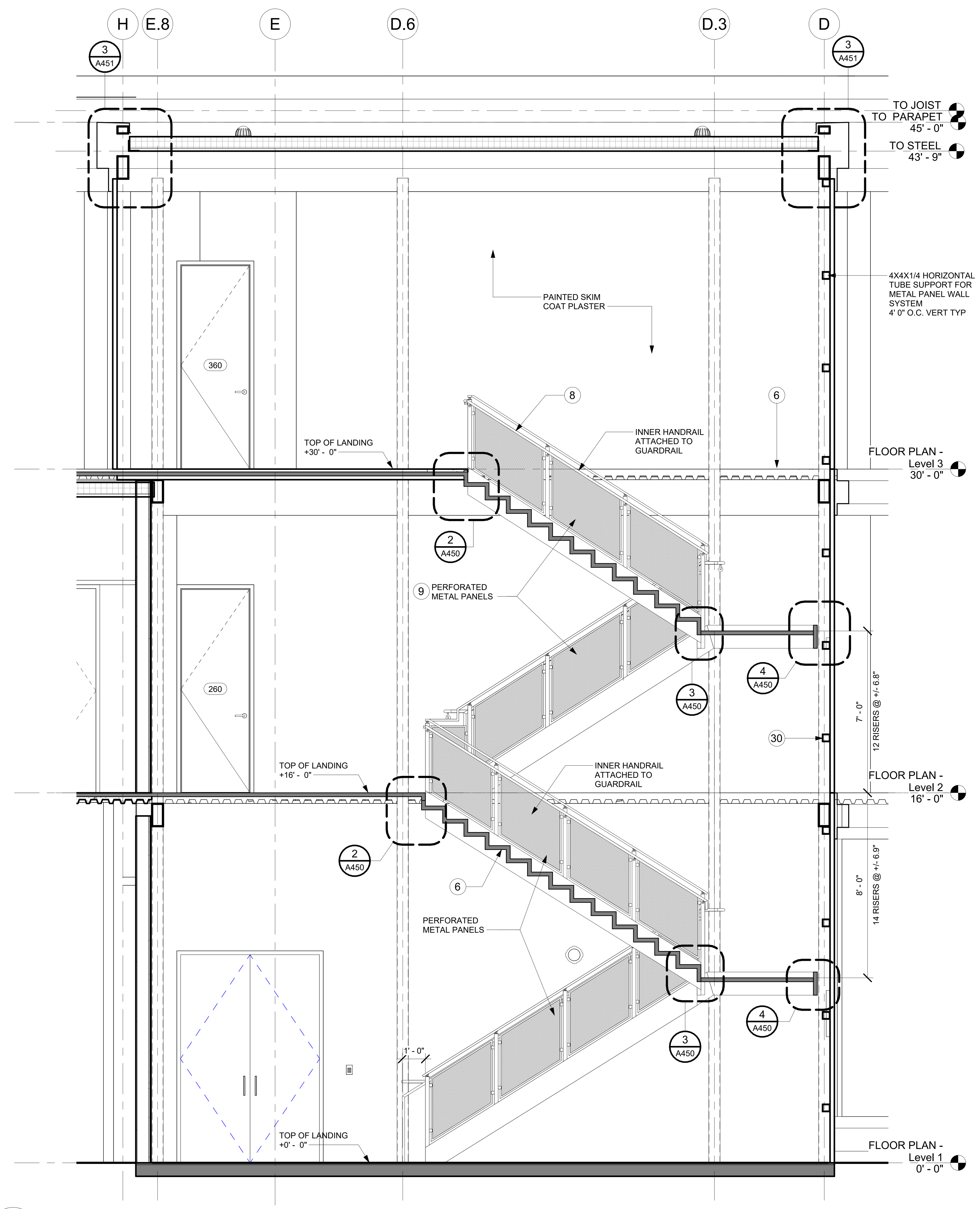

1 A452 STAIR 3 - SECTION 3
SCALE : 3/8" = 1'-0"

FSGROUP ARCHITECTS
16575 Village Drive
Houston Texas 77040
713 344 1752 PH
fsdesignbuild.com

PROJECT NAME

INFORMATION TECHNOLOGY BUILDING
1419 EUGENE HEIMANN CIRCLE
FORT BEND COUNTY , RICHMOND , TEXAS 77469

CONSULTANTS

PROFESSIONAL SEAL

ISSUED FOR
ISSUED FOR PROPOSALS AND PERMIT

REVISIONS

No.	DESCRIPTION	DATE

KEY PLAN

TRUE NORTH

SHEET TITLE
VERTICAL CIRCULATION STAIR 3 SECTIONS

SCALE 3/8" = 1'-0"
DATE 05/15/2024
PROJECT NUMBER 2319
SHEET NUMBER
A452

FILE PATH: Autodesk Docs://FBC IT Building/FBIT_A23.rvt
PLOT DATE: 5/22/2024 1:54:08 PM

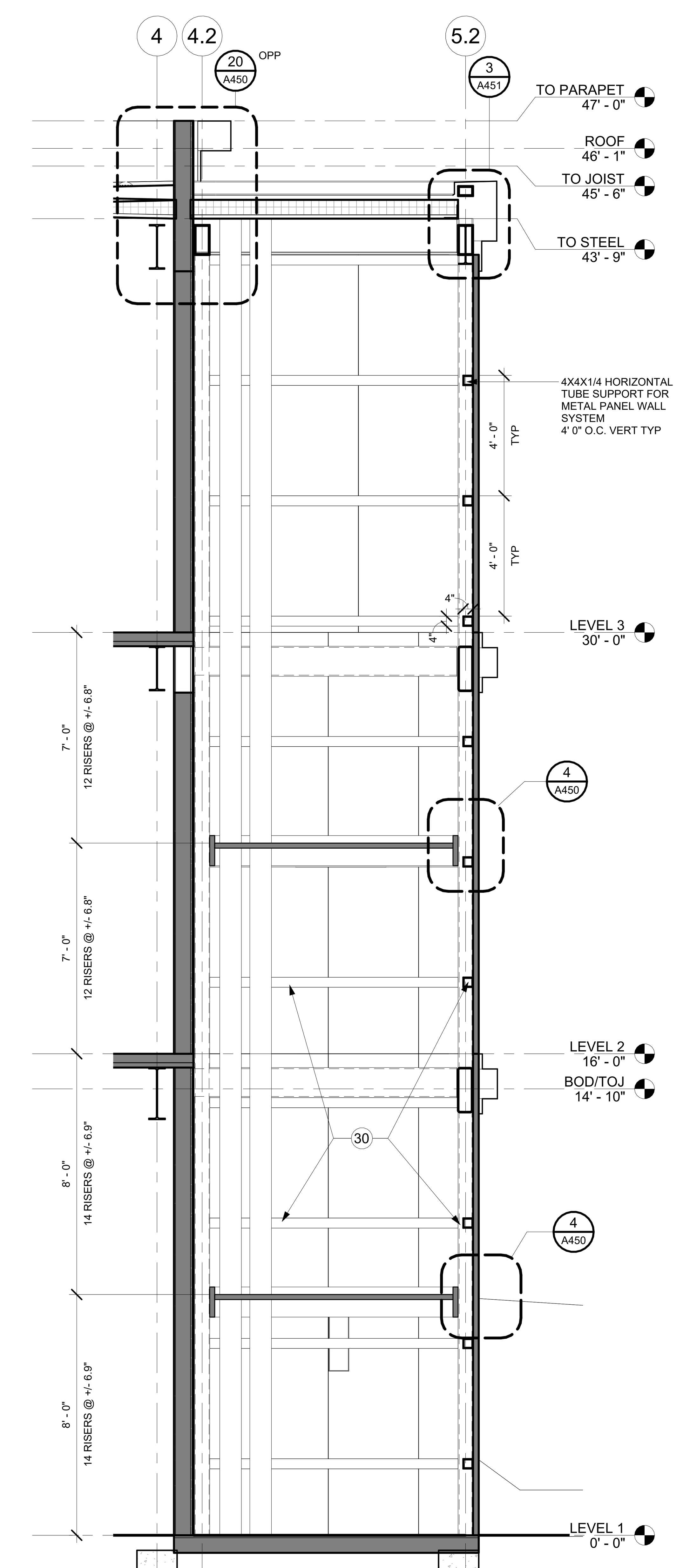

14
A453
STAIR 3 - SECTION 8
SCALE : 3/8" = 1'-0"

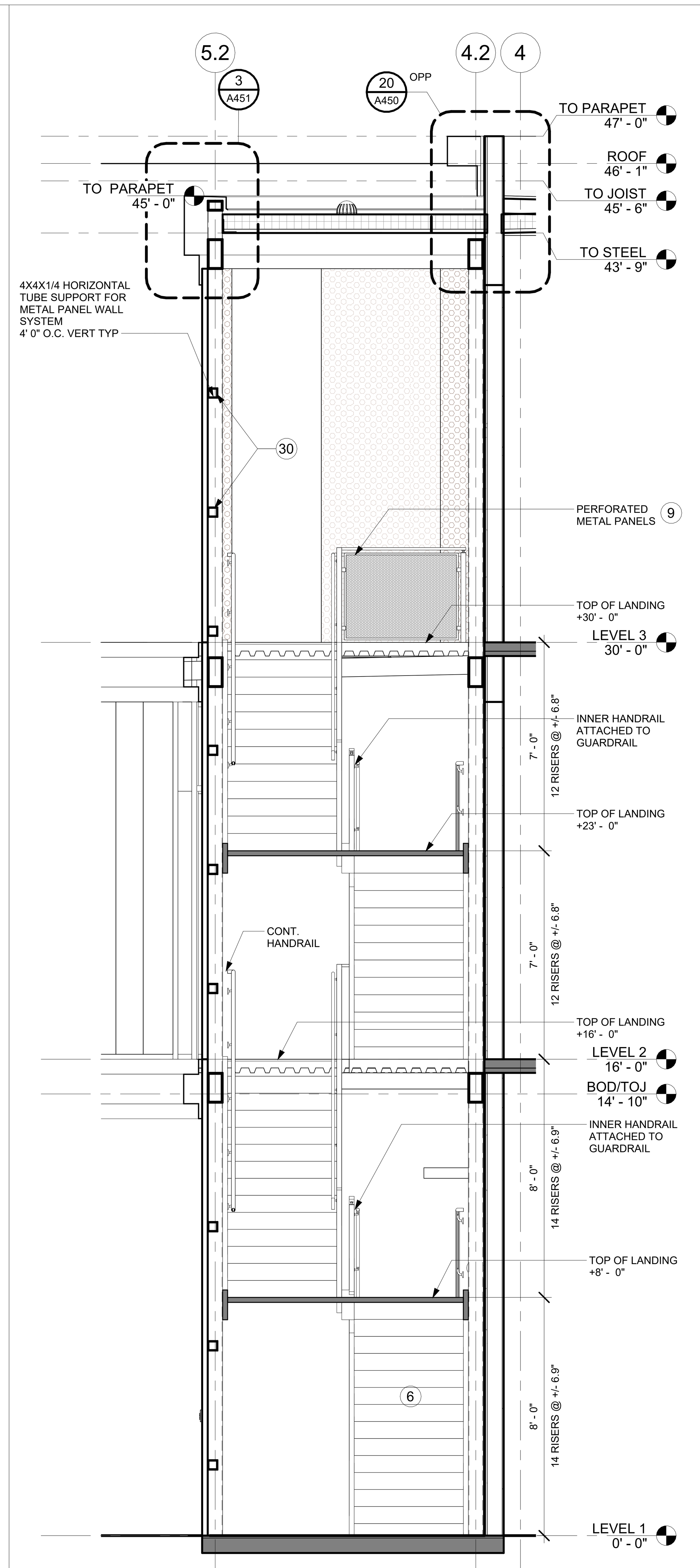

10
A453
STAIR 3 - SECTION 7
SCALE : 3/8" = 1'-0"

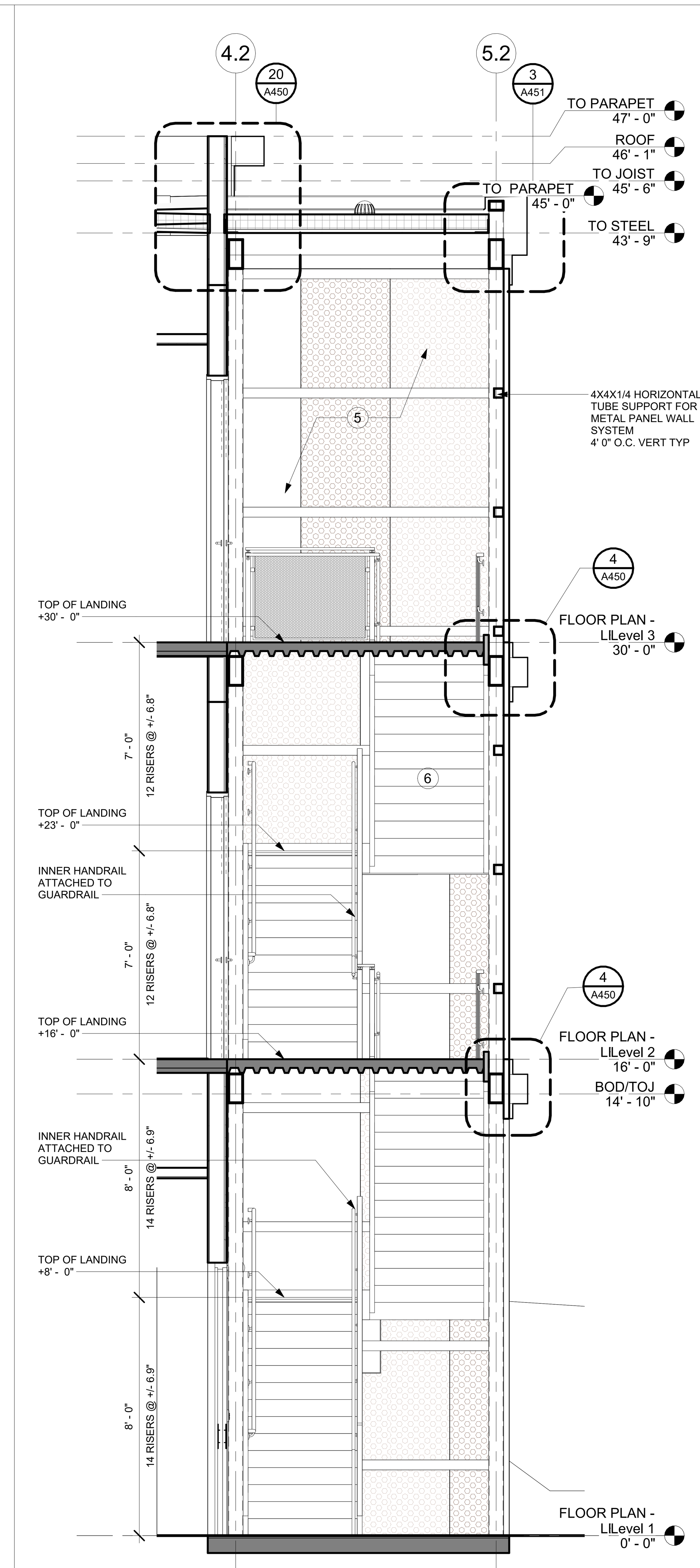

6
A453
STAIR 3 - SECTION 6
SCALE : 3/8" = 1'-0"

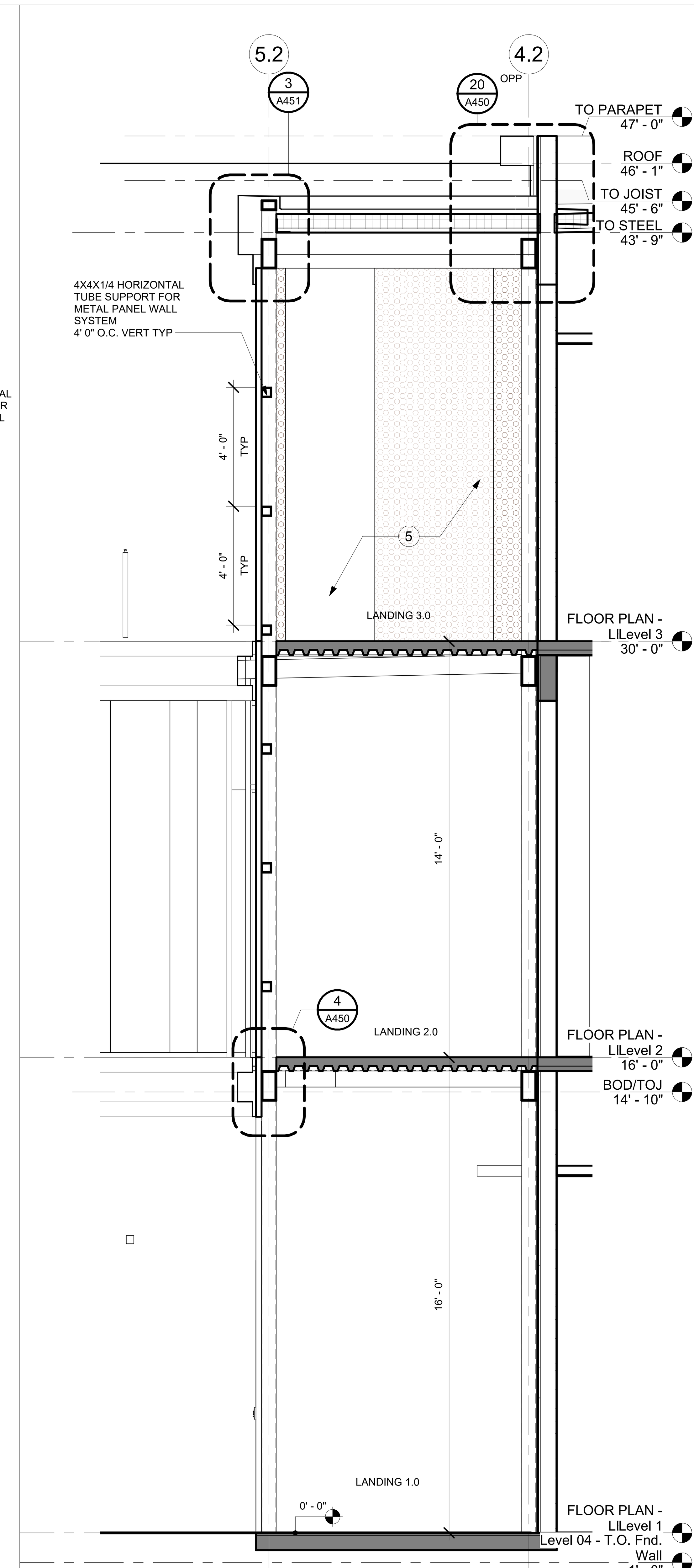

2
A453
STAIR 3 - SECTION 5
SCALE : 3/8" = 1'-0"

FSGROUP®
ARCHITECTS
16575 Village Drive
Houston Texas 77040
713 344 1752 PH
fsdesignbuild.com

PROJECT NAME

THE STATE OF TEXAS
FORT BEND COUNTY

INFORMATION TECHNOLOGY BUILDING
1419 EUGENE HEIMANN CIRCLE
FORT BEND COUNTY , RICHMOND , TEXAS 77469

CONSULTANTS

PROFESSIONAL SEAL

REGISTERED ARCHITECT
FAKHRUDDIN N SABIR
22631
STATE OF TEXAS
5/15/2024

ISSUED FOR
ISSUED FOR PROPOSALS
AND PERMIT

REVISIONS

No.	DESCRIPTION	DATE

KEY PLAN

TRUE
NORTH

SHEET TITLE
VERTICAL CIRCULATION
STAIR 3 SECTIONS

SCALE
3/8" = 1'-0"

DATE
05/15/2024

PROJECT NUMBER
2319

SHEET NUMBER
A453

FILE PATH: Autodesk Docs://FBC IT Building/FBIT_A23.rvt
PLOT DATE: 5/22/2024 1:53:18 PM

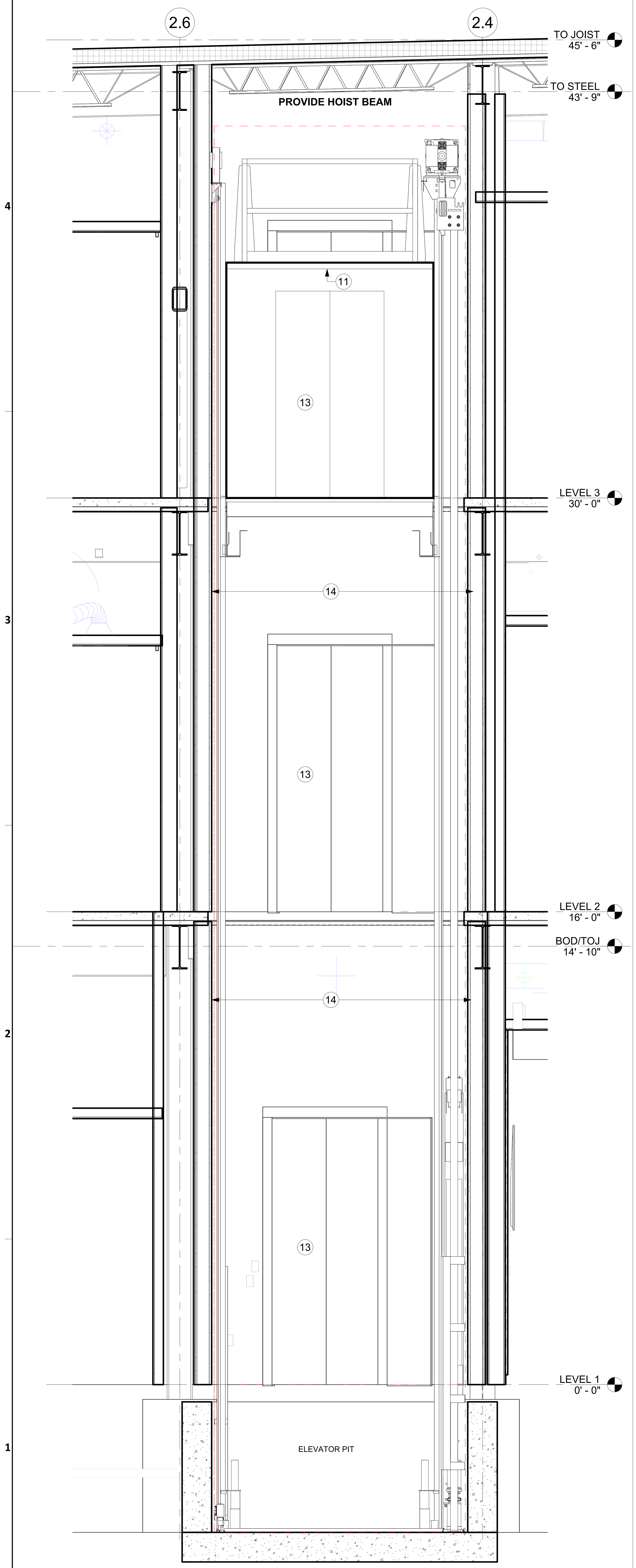

6
A460
ELEVATOR 1 SECTION- E-W VIEW
SCALE : 1/2" = 1'-0"

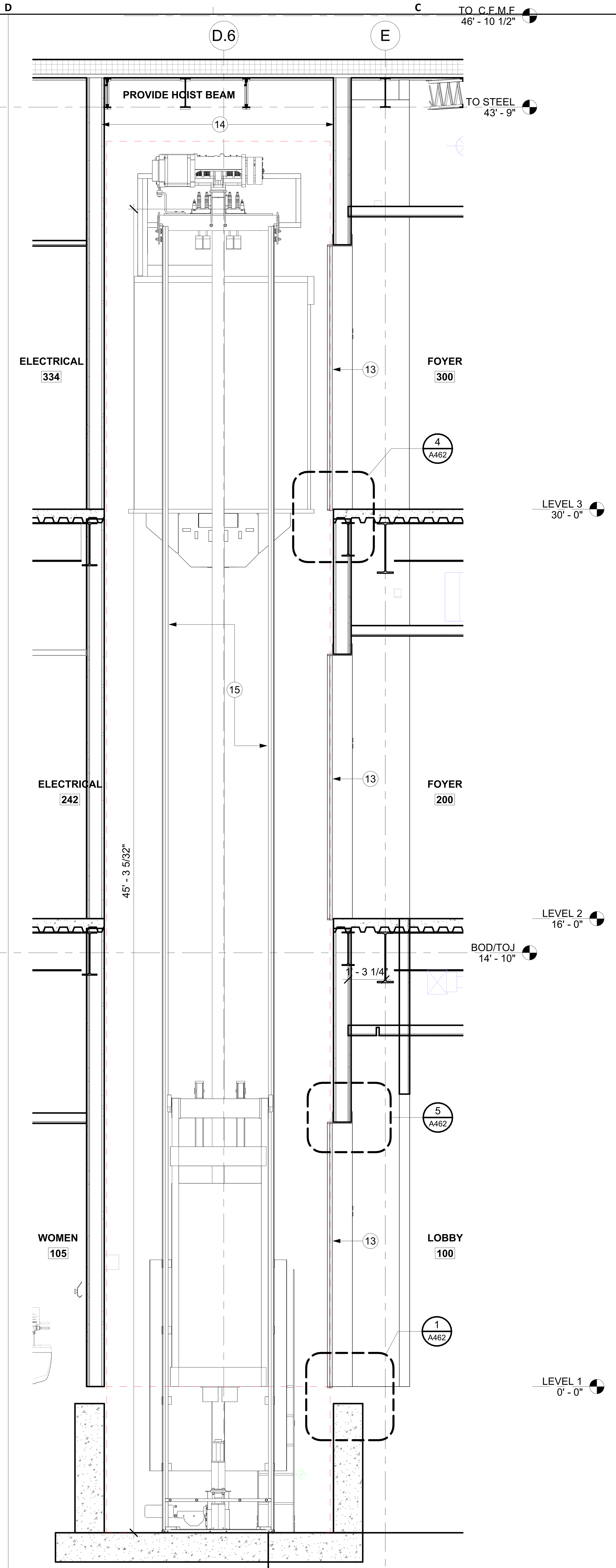

5
A460
ELEVATOR 1 SECTION- N-S VIEW
SCALE : 1/2" = 1'-0"

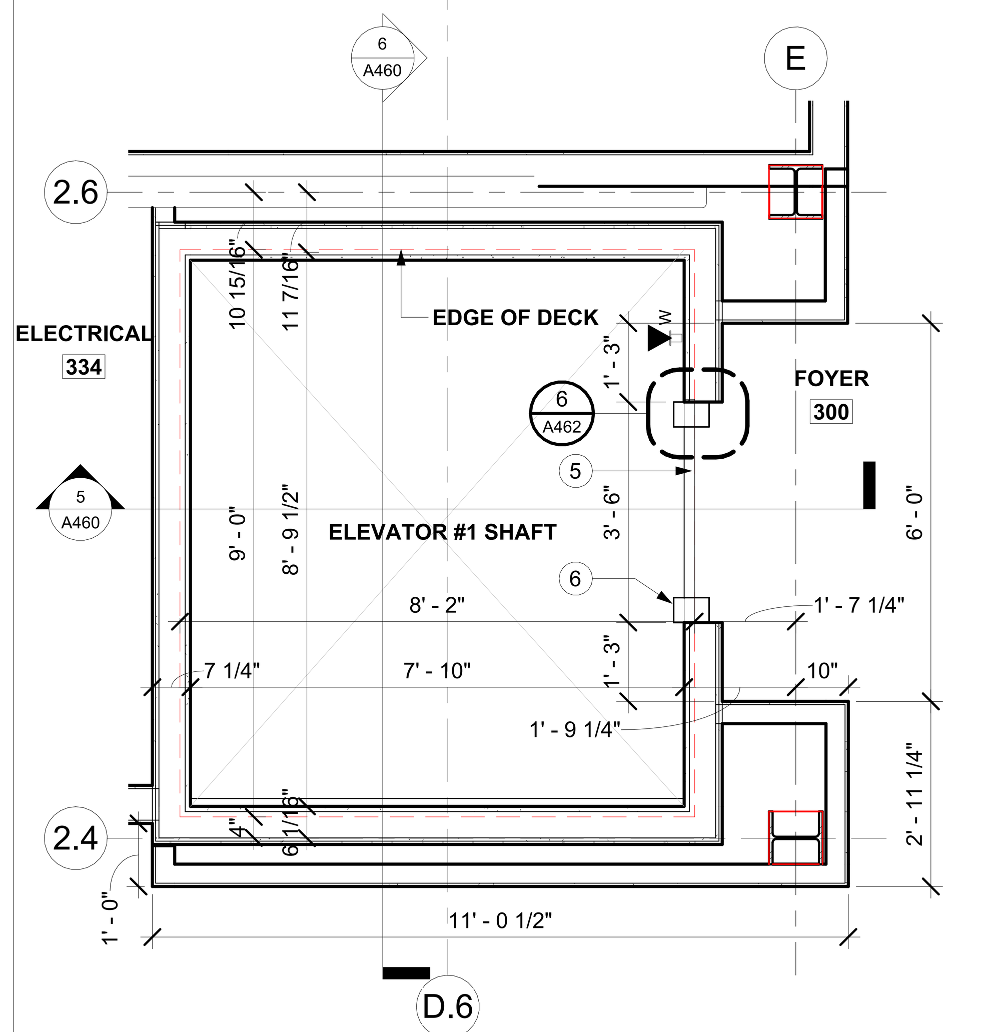

4
A460
ENLG PLAN: ELEVATOR 1 - LEVEL 3
SCALE : 1/2" = 1'-0"

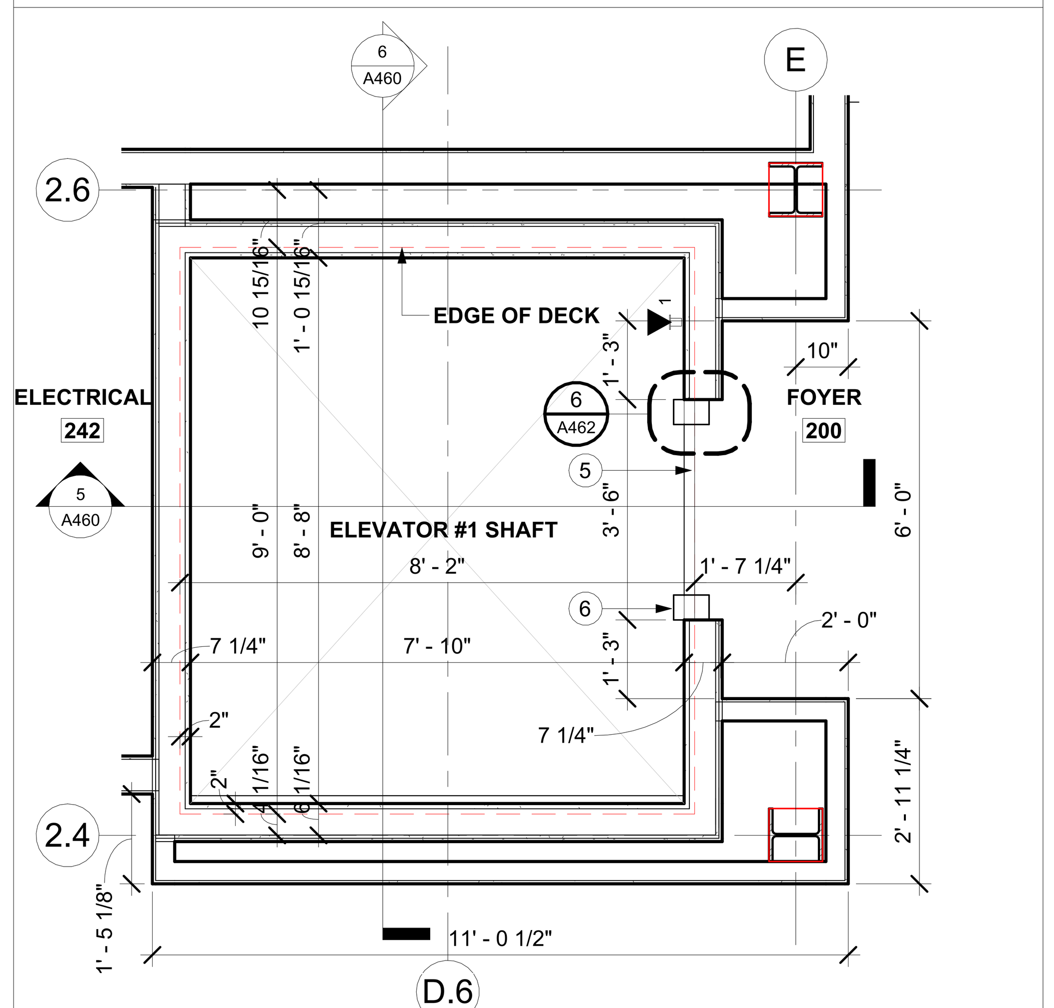

3
A460
ENLG PLAN: ELEVATOR 1 - LEVEL 2
SCALE : 1/2" = 1'-0"

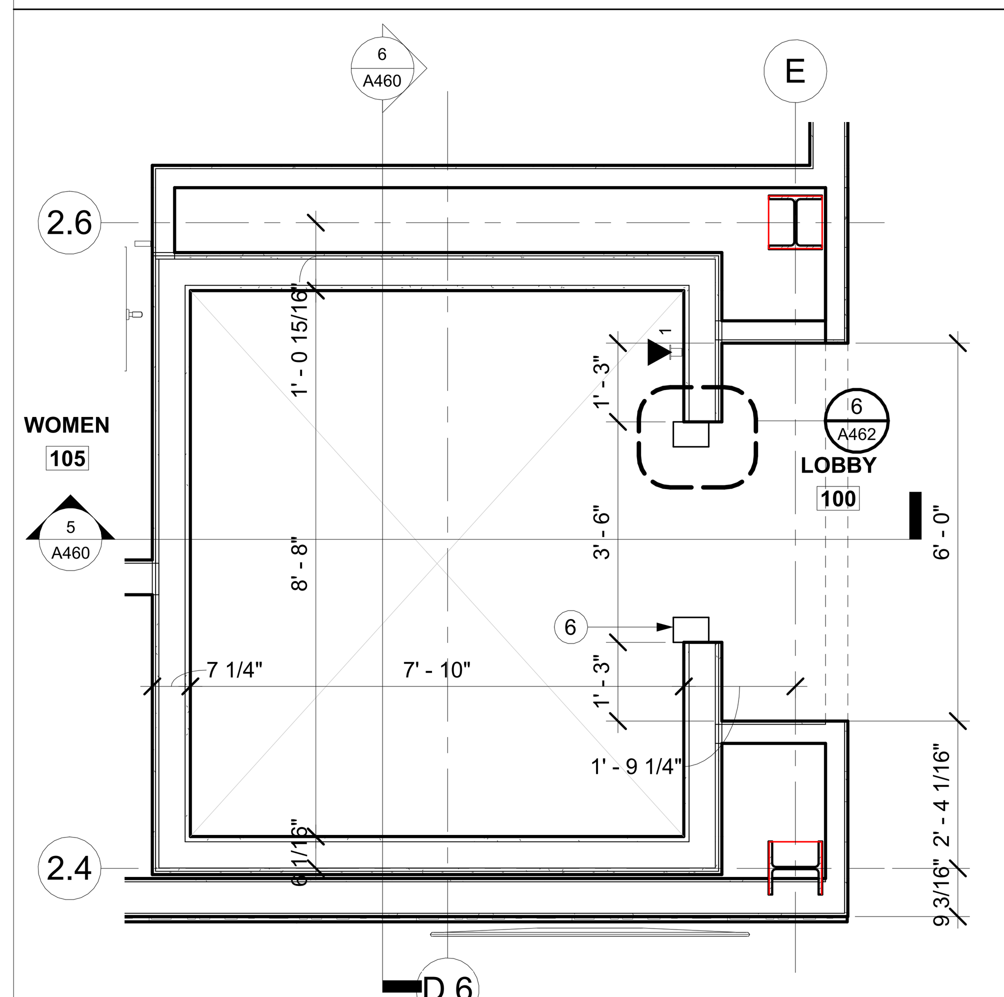

2
A460
ENLG PLAN: ELEVATOR 1 - LEVEL 1
SCALE : 1/2" = 1'-0"

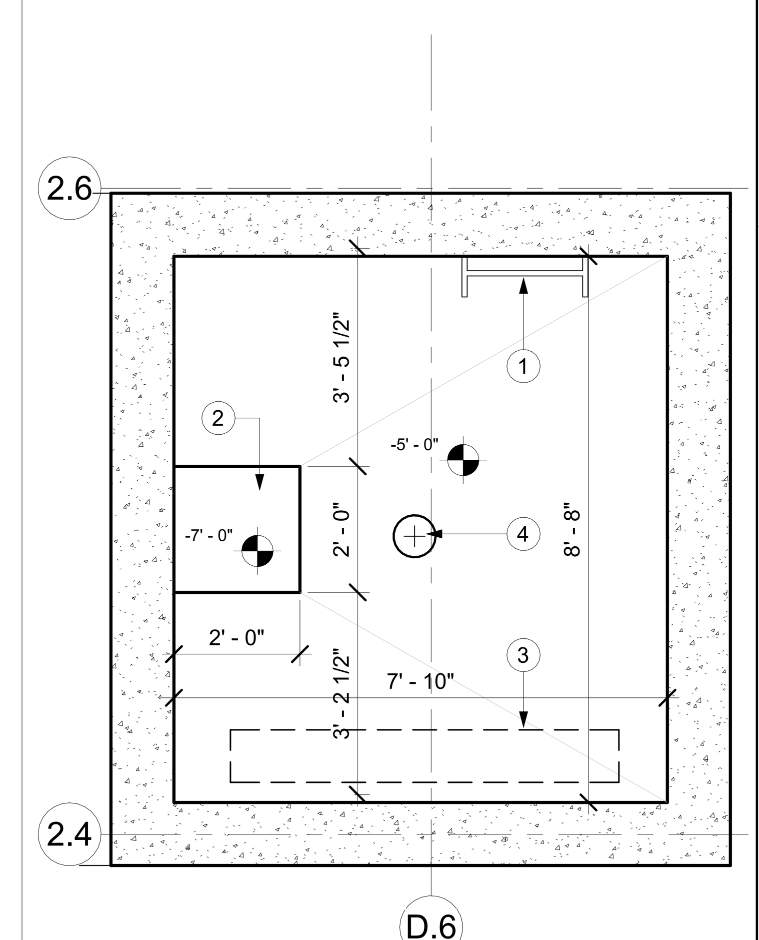

1
A460
ENLG PLAN: ELEVATOR 1 PIT
SCALE : 1/2" = 1'-0"

KEY NOTES

1. LADDER FOR ELEVATOR PIT. PROVIDED BY ELEVATOR MANUFACTURER.
2. SUMP PIT. RE: STRUCTURAL DRAWINGS.
3. COUNTERWEIGHT FOR ELEVATOR LOCATED ABOVE.
4. POLE SPRING FOR ELEVATOR.
5. HSS6x2x1/4 AT DOOR OPENING. REFER TO DETAIL 4/A462.
6. ELEVATOR JAMB PROVIDED BY ELEVATOR MANUFACTURER. REFER TO DETAIL 6/A462.
7. POWDER COATED PAINTED WALLS
8. PT COLOR - EDMONTON WHITE
9. METAL PANEL IS SWL TEXTURED.
10. HANDRAIL BRUSHED ALUMINUM 1 1/2" BY 2". RECTANGULAR CUT-END. BACKSIDE ONLY
11. CEILING
12. CONTROL PANEL - FULL LENGTH FLUSH MOUNTED
13. ELEVATOR DOOR 1-HOUR FIRE RATED
14. ELEVATOR SHAFT 1-HOUR FIRE RATED ENCLOSURE
15. ELEVATOR MACHINERY

FSGROUP ARCHITECTS
16575 Village Drive
Houston Texas 77040
713 344 1752 PH
fsdesignbuild.com

PROJECT NAME

THE STATE OF TEXAS
FORT BEND COUNTY

INFORMATION TECHNOLGY BUILDING
1419 EUGENE HEIMANN CIRCLE
FORT BEND COUNTY . RICHMOND . TEXAS 77469

CONSULTANTS

PROFESSIONAL SEAL

REGISTERED ARCHITECT
FAKHRUDDIN N. SABIR
12631
STATE OF TEXAS
5/15/2024

ISSUED FOR
ISSUED FOR PROPOSALS AND PERMIT

REVISIONS

No.	DESCRIPTION	DATE

KEY PLAN

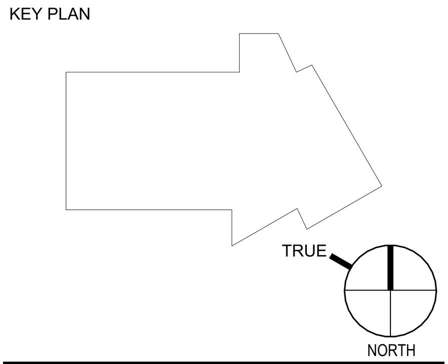

SHEET TITLE
VERTICAL CIRCULATION ELEVATOR 1

SCALE
As indicated

DATE
05/15/2024

PROJECT NUMBER
2319

SHEET NUMBER
A460

PLOT DATE: 5/21/2024 5:08:14 PM
FILE PATH: Autodesk Docs://FBC IT Building/FBIT_A23.rvt

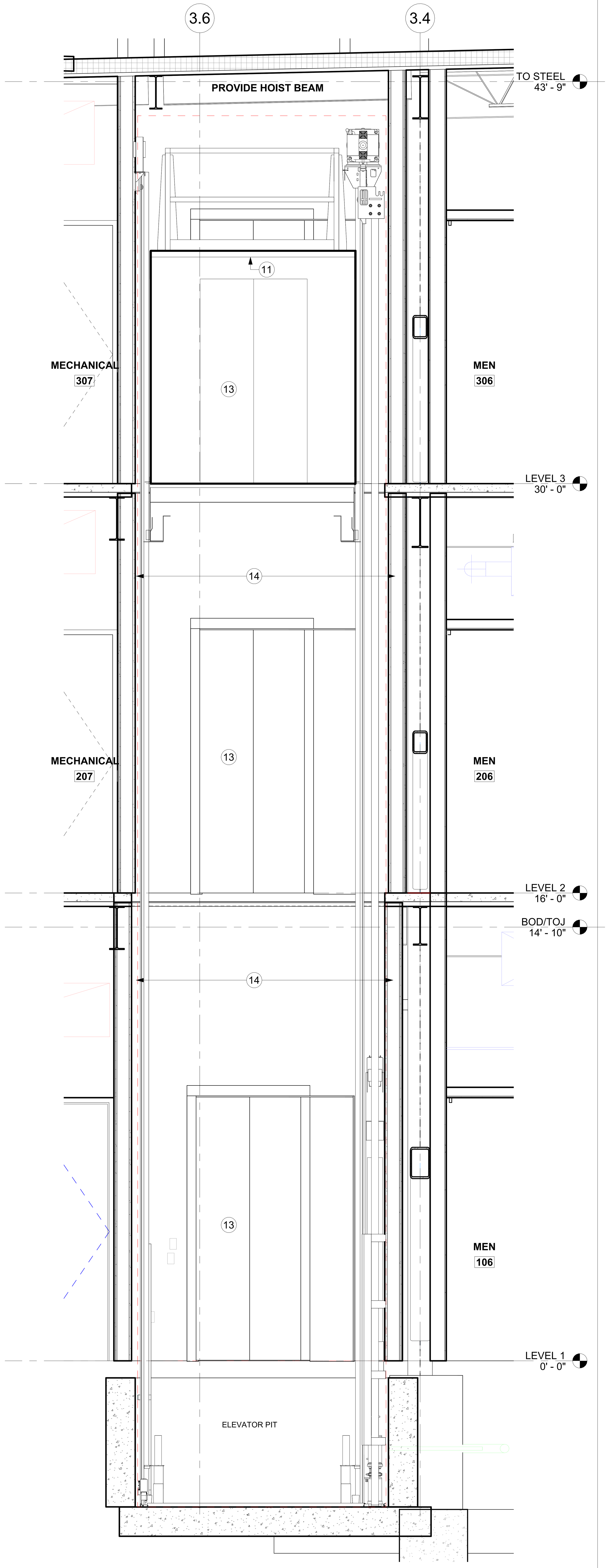

9 A461 ELEVATOR 2 SECTION- N-S VIEW
SCALE : 1/2" = 1'-0"

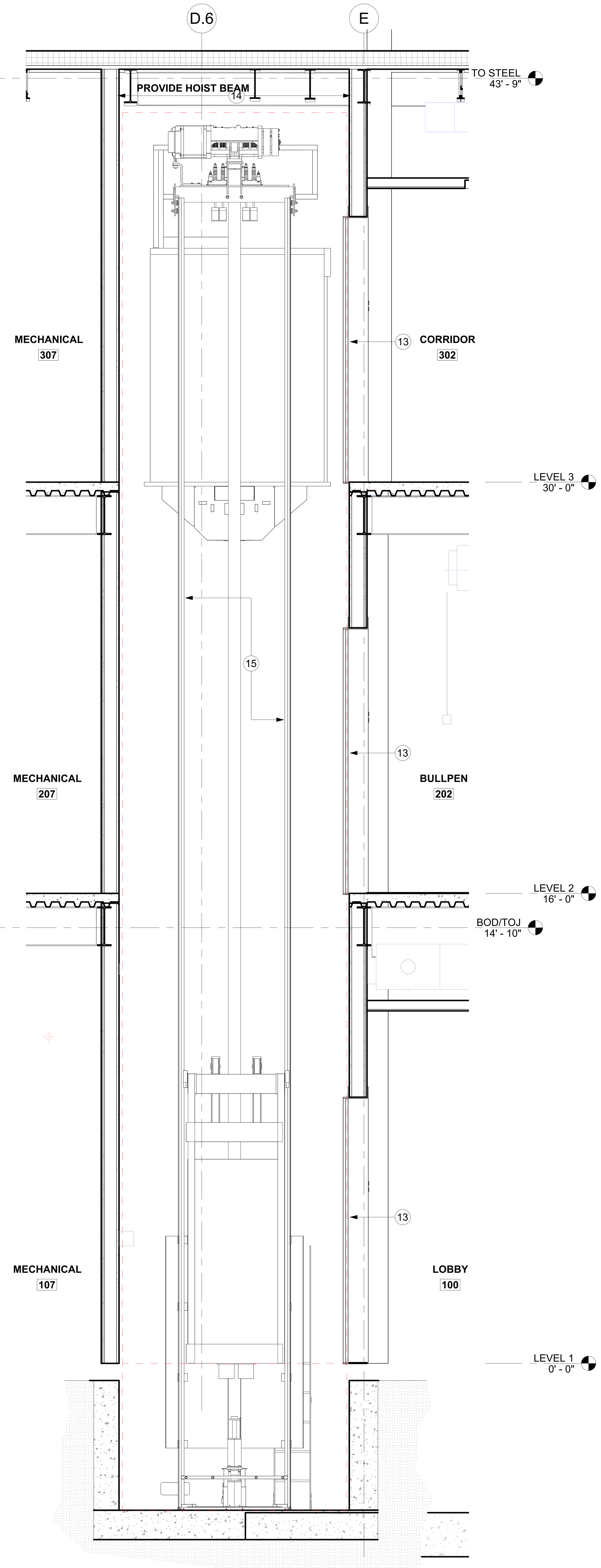

5 A461 ELEVATOR 2 SECTION- E-W VIEW
SCALE : 1/2" = 1'-0"

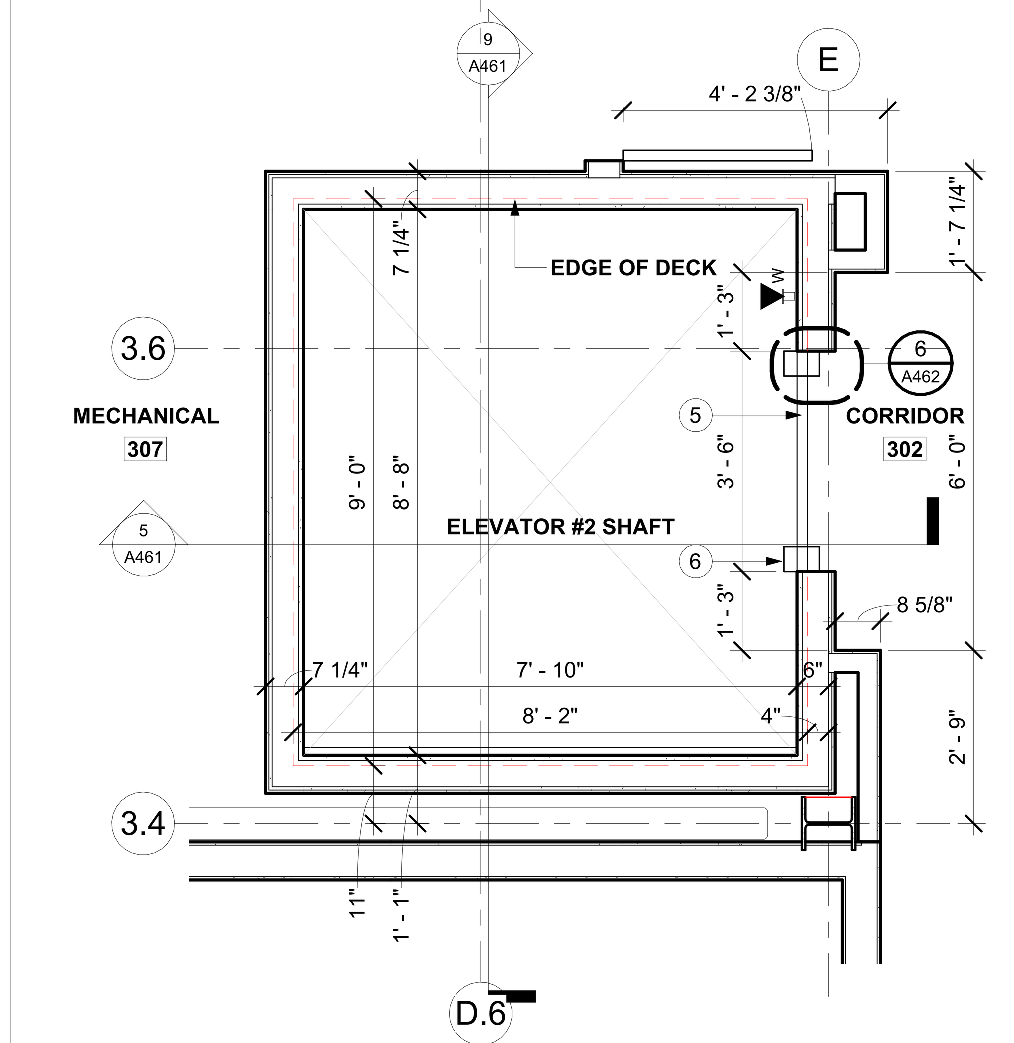

4 A461 ENLG PLAN: ELEVATOR 2 - LEVEL 3
SCALE : 1/2" = 1'-0"

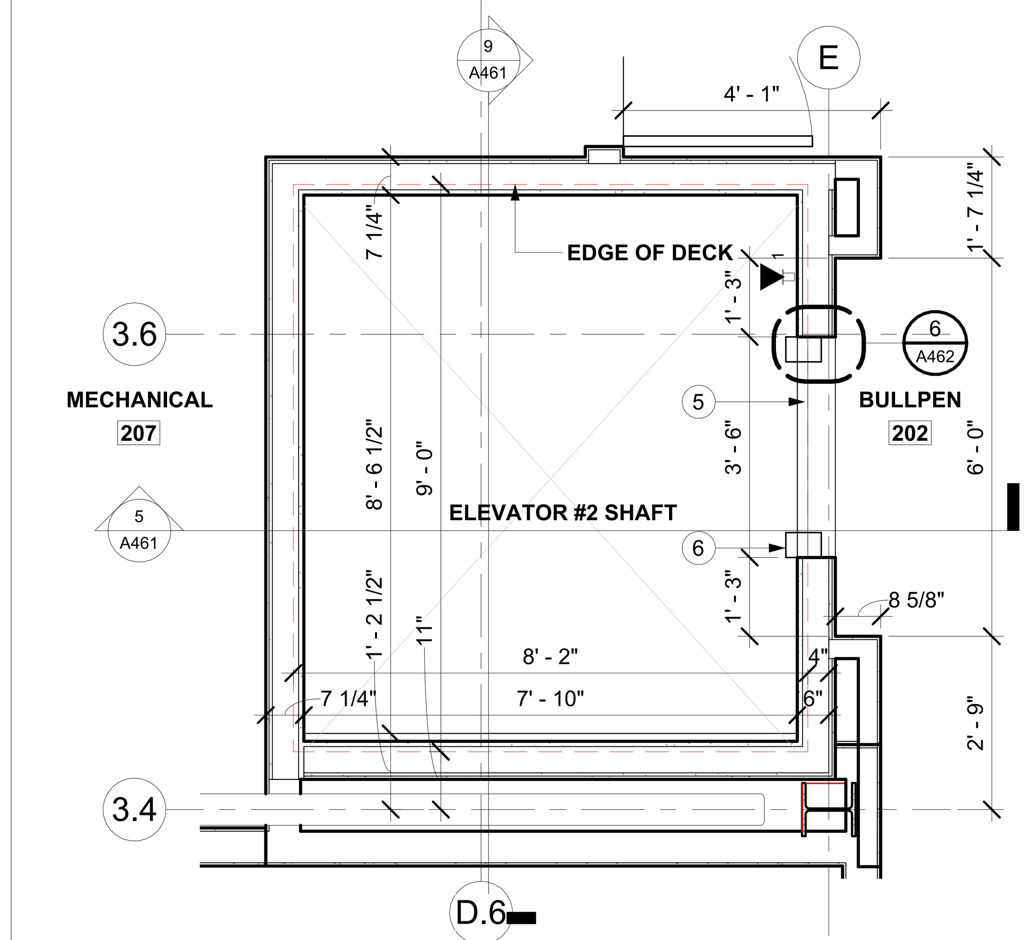

3 A461 ENLG PLAN: ELEVATOR 2 - LEVEL 2
SCALE : 1/2" = 1'-0"

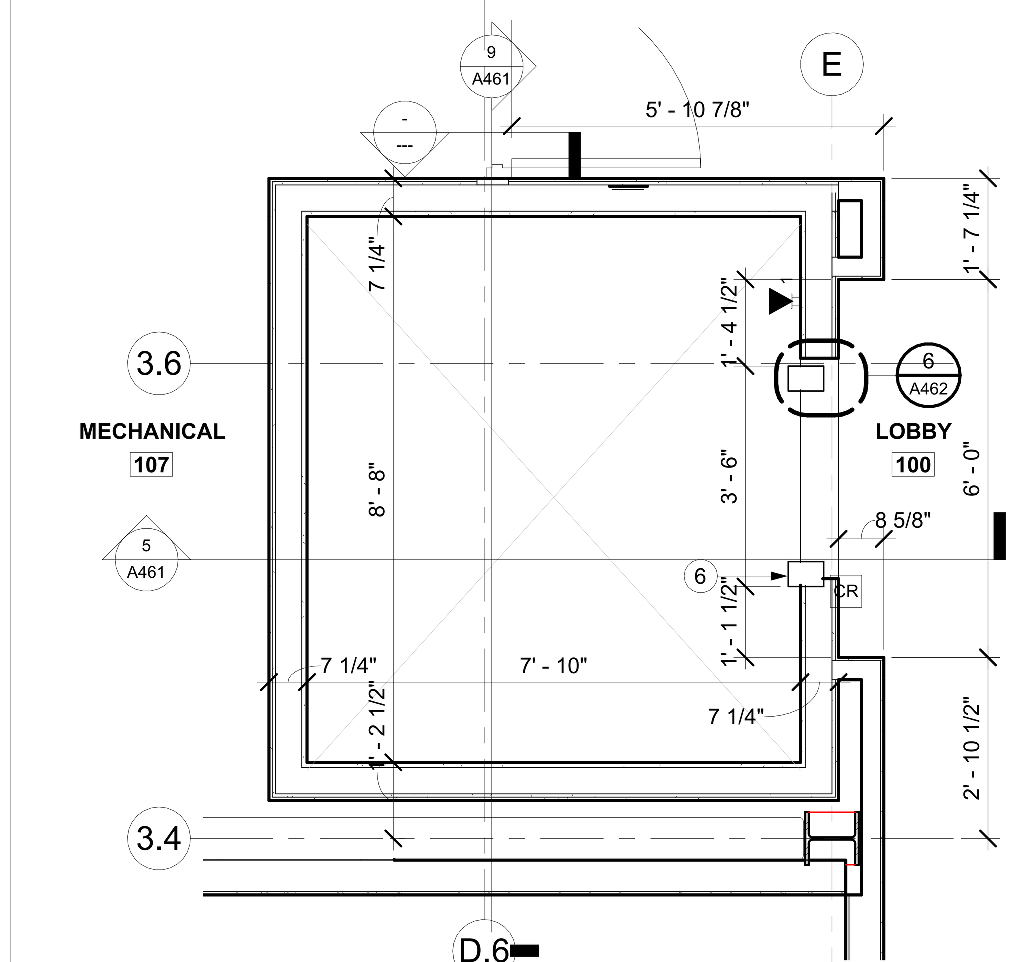

2 A461 ENLG PLAN: ELEVATOR 2 - LEVEL 1
SCALE : 1/2" = 1'-0"

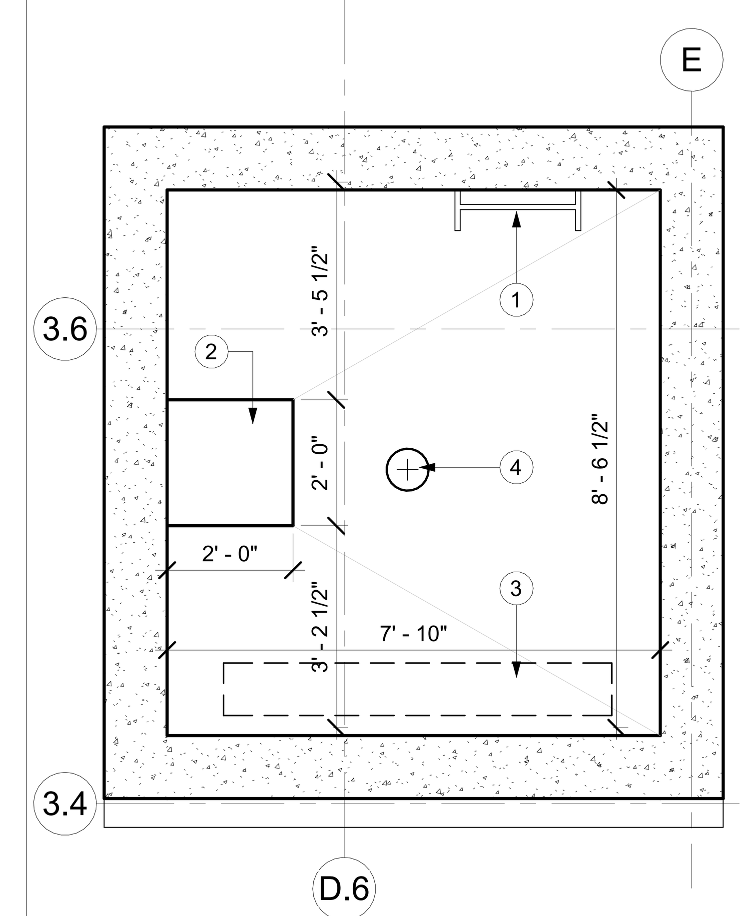

1 A461 ENLG PLAN: ELEVATOR 2 PIT
SCALE : 1/2" = 1'-0"

KEY NOTES

1 LADDER FOR ELEVATOR PIT. PROVIDED BY ELEVATOR MANUFACTURER.
2 SUMP PIT. RE: STRUCTURAL DRAWINGS.
3 COUNTERWEIGHT FOR ELEVATOR LOCATED ABOVE.
4 POLE SPRING FOR ELEVATOR.
5 HSS6x2x1/4 AT DOOR OPENING. REFER TO DETAIL 4/A462.
6 ELEVATOR JAMB PROVIDED BY ELEVATOR MANUFACTURER. REFER TO DETAIL 6/A462.
7 POWDER COATED PAINTED WALLS
8 PT COLOR - EDMONTON WHITE
9 METAL PANEL IS SWL TEXTURED.
10 HANDRAIL BRUSHED ALUMINUM 1 1/2" BY 2". RECTANGULAR CUT-END. BACKSIDE ONLY
11 CEILING
12 CONTROL PANEL - FULL LENGTH FLUSH MOUNTED
13 ELEVATOR DOOR 1-HOUR FIRE RATED
14 ELEVATOR SHAFT 1-HOUR FIRE RATED ENCLOSURE
15 ELEVATOR MACHINERY

FSGROUP ARCHITECTS
16575 Village Drive
Houston Texas 77040
713 344 1752 PH
fsdesignbuild.com

PROJECT NAME

THE STATE OF TEXAS FORT BEND COUNTY

INFORMATION TECHNOLGY BUILDING
1419 EUGENE HEIMANN CIRCLE
FORT BEND COUNTY . RICHMOND . TEXAS 77469

CONSULTANTS

PROFESSIONAL SEAL

REGISTERED ARCHITECT FAKHRUDDIN 'N' SABIR 22631 STATE OF TEXAS
5/15/2024

ISSUED FOR
ISSUED FOR PROPOSALS AND PERMIT

REVISIONS

No.	DESCRIPTION	DATE

KEY PLAN

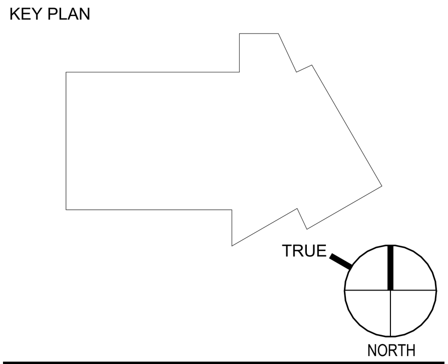

SHEET TITLE
VERTICAL CIRCULATION ELEVATOR 2

SCALE: As indicated
DATE: 05/15/2024
PROJECT NUMBER: 2319
SHEET NUMBER
A461

FILE PATH: Autodesk Docs://FBC IT Building/FBIT_A23.rvt
PLOT DATE: 5/21/2024 5:08:35 PM

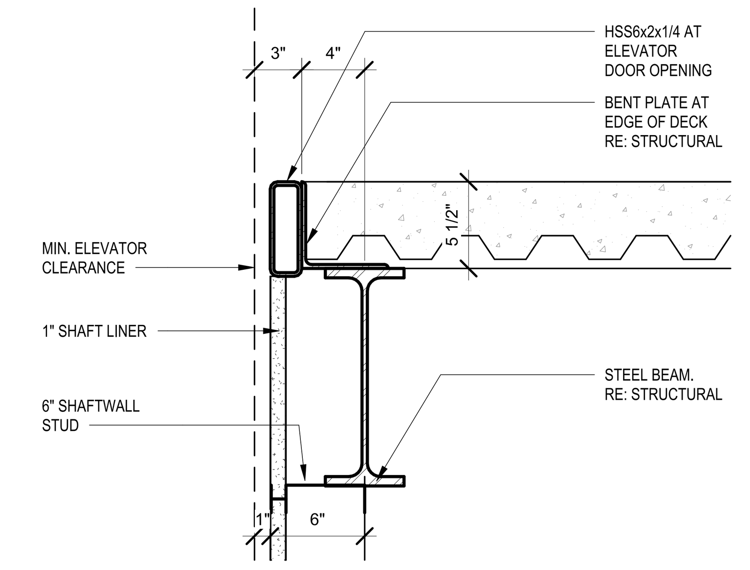

4 / A462 DETAIL @ ELEVATOR ENTRANCE
SCALE : 1 1/2" = 1'-0"

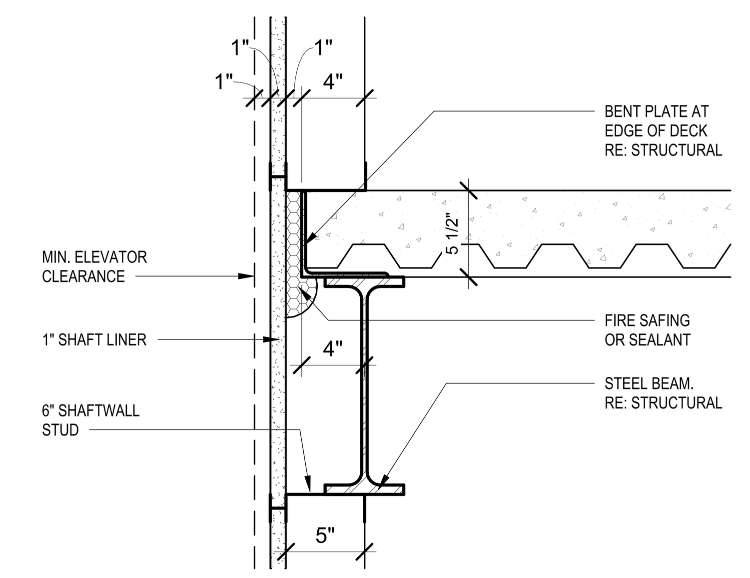

3 / A462 EDGE OF DECK TYP UNO
SCALE : 1 1/2" = 1'-0"

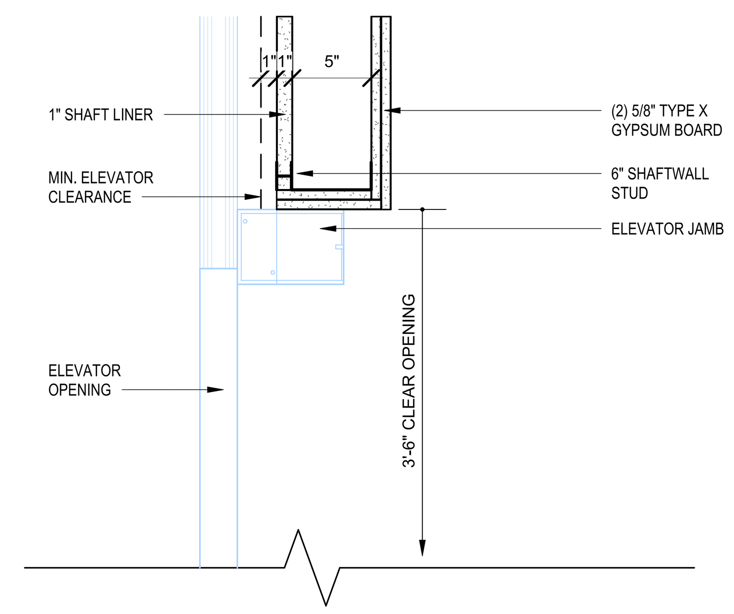

6 / A462 DETAIL @ ELEVATOR JAMB
SCALE : 1 1/2" = 1'-0"

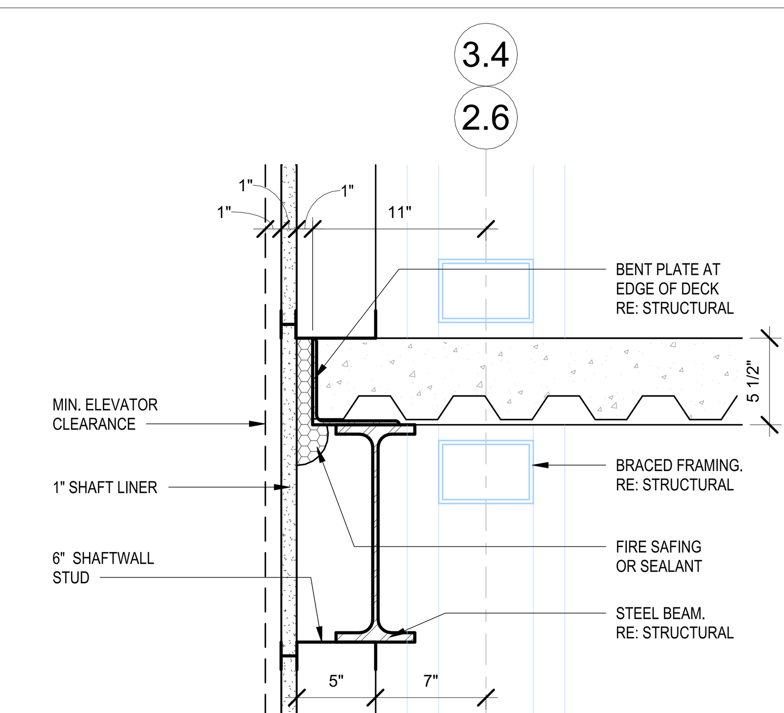

2 / A462 DETAIL @ ELEVATOR BRACE FRAMING
SCALE : 1 1/2" = 1'-0"

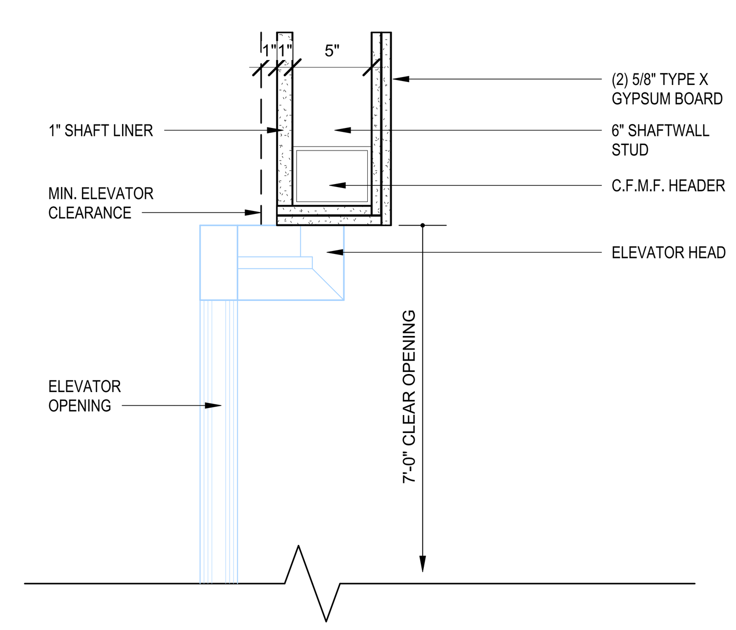

5 / A462 DETAIL @ ELEVATOR HEAD
SCALE : 1 1/2" = 1'-0"

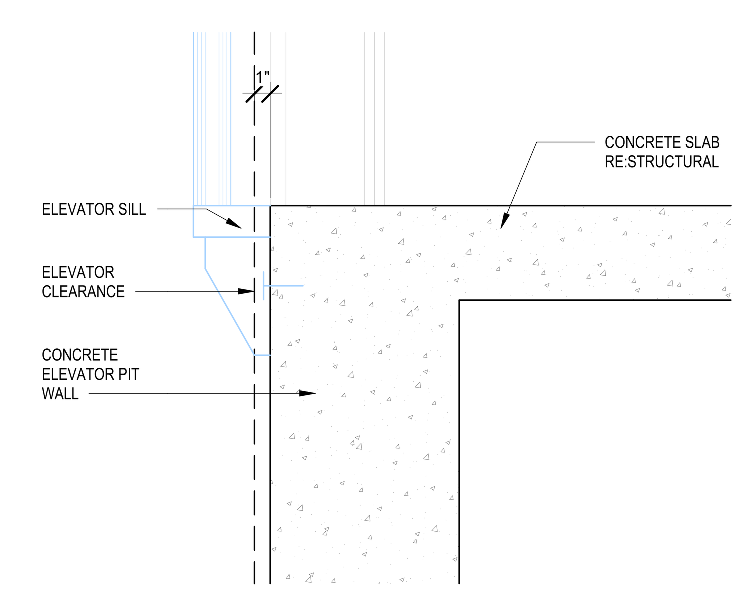

1 / A462 DETAIL @ ELEVATOR PIT
SCALE : 1 1/2" = 1'-0"

PLOT DATE: 5/21/2024 5:08:50 PM
FILE PATH: Autodesk Docs://FBC IT Building/FBIT_A23.rvt

FSGROUP® ARCHITECTS
16575 Village Drive
Houston Texas 77040
713 344 1752 PH
fsdesignbuild.com

PROJECT NAME

INFORMATION TECHNOLGY BUILDING
1419 EUGENE HEIMANN CIRCLE
FORT BEND COUNTY . RICHMOND . TEXAS 77469

CONSULTANTS

PROFESSIONAL SEAL

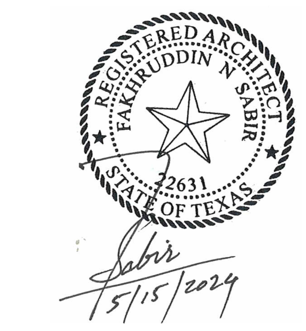

ISSUED FOR
ISSUED FOR PROPOSALS AND PERMIT

REVISIONS

No.	DESCRIPTION	DATE

KEY PLAN

TRUE NORTH

SHEET TITLE
VERTICAL CIRCULATION ELEVATOR DETAILS

SCALE 1 1/2" = 1'-0"

DATE 05/15/2024

PROJECT NUMBER 2319

SHEET NUMBER
A462

CEILING FINISH & LIGHTING:

- CEILING FINISH = BRUSHED STAINLESS STEEL
- LIGHTING = STANDARD LED ROUND SPOT DOWNLIGHTS

BASIS OF DESIGN: SCHINDLER 3300 / CAPACITY 3500 LBS

CORNERS AND SKIRTING:

- ANODIZED ALUMINUM, GREY

BASIS OF DESIGN: SCHINDLER 3300 / CAPACITY 3500 LBS

HANDRAIL:

- RECTANGULAR CUT END, BRUSHED STAINLESS STEEL

BASIS OF DESIGN: SCHINDLER 3300 / CAPACITY 3500 LBS

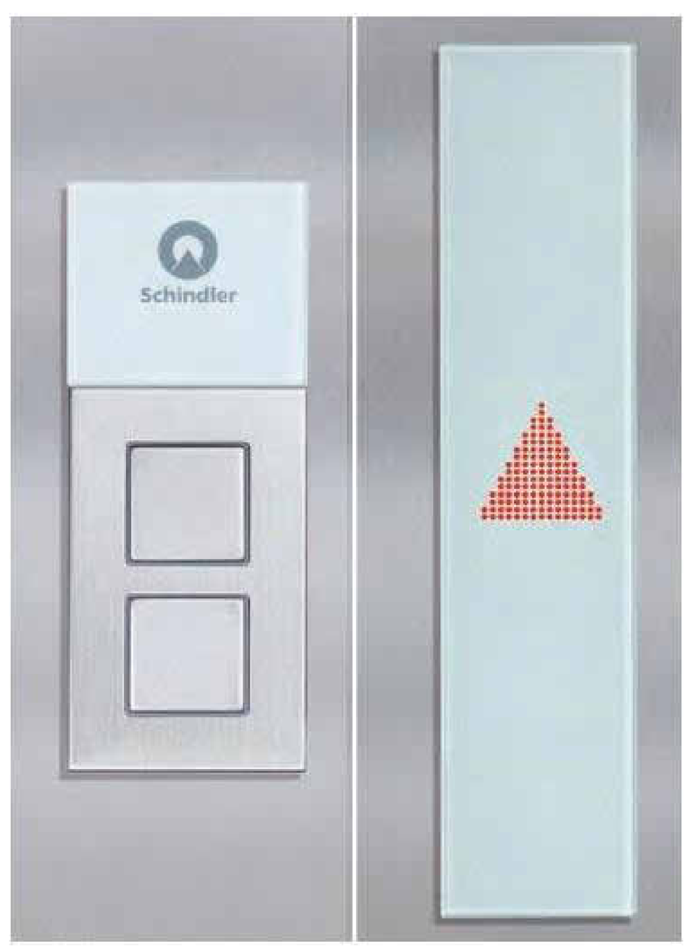

HALL FIXTURES:

- STANDARD CALL BUTTONS AND CALL INDICATOR

BASIS OF DESIGN: SCHINDLER 3300 / CAPACITY 3500 LBS

LANDING DOORS FINISH:

- DOORS FINISH = STAINLESS STEEL

BASIS OF DESIGN: SCHINDLER 3300 / CAPACITY 3500 LBS

WALL FINISH AND FLOOR FINISH:

- WALL FINISH = POWDER COATED PAINT WALLS IN EDMONTON WHITE
- FLOOR FINISH = LASSA WHITE PORCELAIN TILE (PT-2)
- NOTE: ELEVATOR FLOOR NEEDS TO BE RECESSED TO ACCOMODATE CUSTOM FLOORING

BASIS OF DESIGN: SCHINDLER 3300 / CAPACITY 3500 LBS

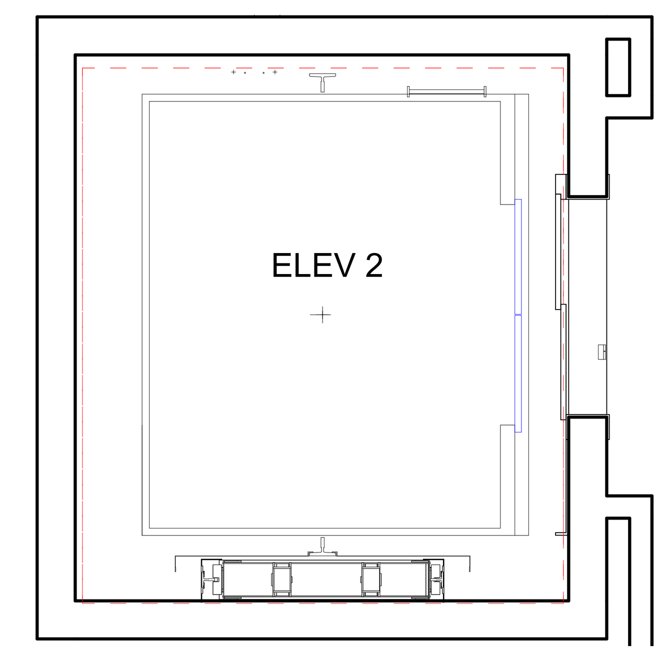

2 A463 ENLG PLAN: ELEVATOR 2
SCALE : 1/2" = 1'-0"

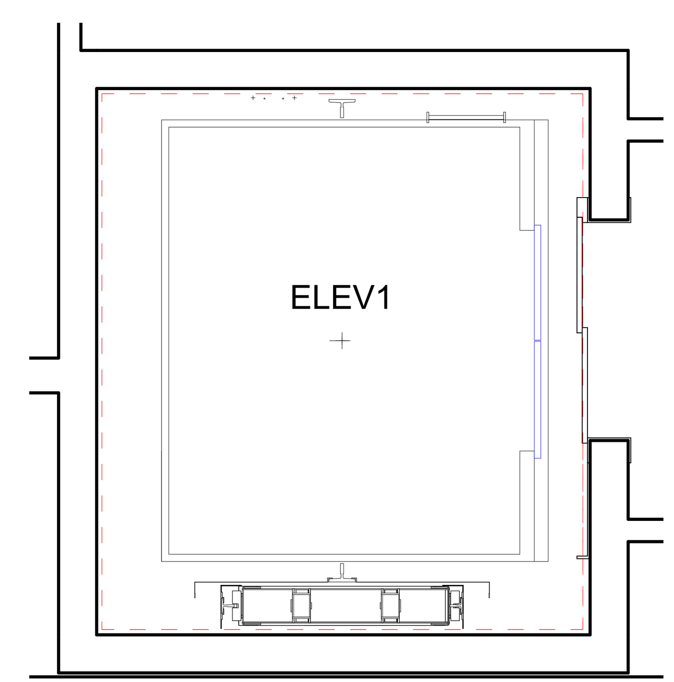

1 A463 ENLG PLAN: ELEVATOR 1
SCALE : 1/2" = 1'-0"

FSGROUP®
ARCHITECTS
16575 Village Drive
Houston Texas 77040
713 344 1752 PH
fsdesignbuild.com

PROJECT NAME

THE STATE OF TEXAS FORT BEND COUNTY

INFORMATION TECHNOLOGY BUILDING
1419 EUGENE HEIMANN CIRCLE
FORT BEND COUNTY . RICHMOND . TEXAS 77469

CONSULTANTS

PROFESSIONAL SEAL

REGISTERED ARCHITECT FAKHRUDDIN N. SABIR 22631 STATE OF TEXAS
5/15/2024

ISSUED FOR
ISSUED FOR PROPOSALS AND PERMIT

REVISIONS

No.	DESCRIPTION	DATE

KEY PLAN

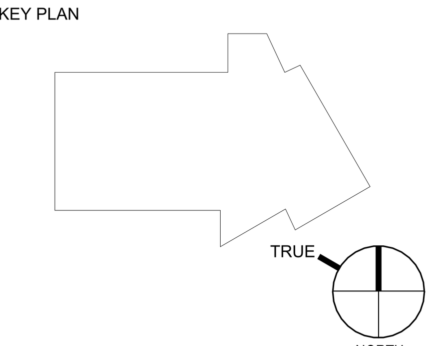

SHEET TITLE
VERTICAL CIRCULATION ELEV 1 AND 2 FINISHES

SCALE 1/2" = 1'-0"

DATE 05/15/2024

PROJECT NUMBER 2319

SHEET NUMBER
A463

FILE PATH: Autodesk Docs://FBC IT Building/FBIT_A23.rvt
PLOT DATE: 5/21/2024 5:09:10 PM

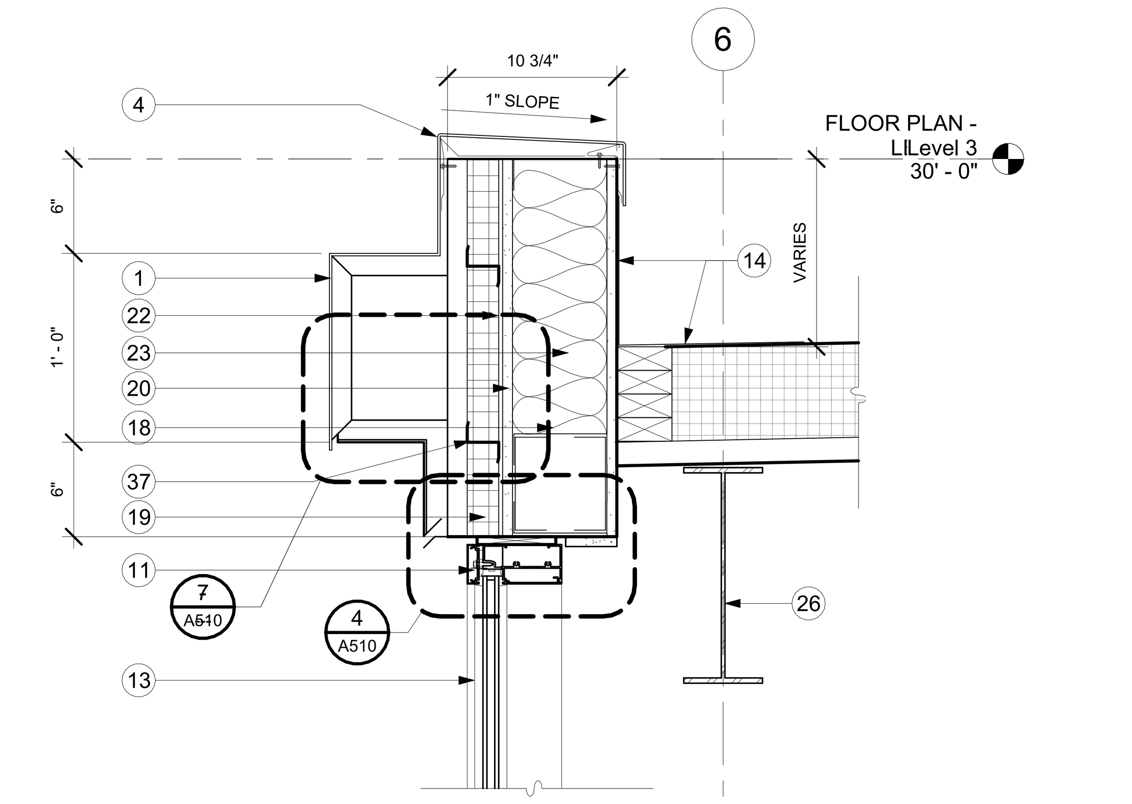

12 A500 DETAIL @ DOCK PARAPET
SCALE : 1 1/2" = 1'-0"

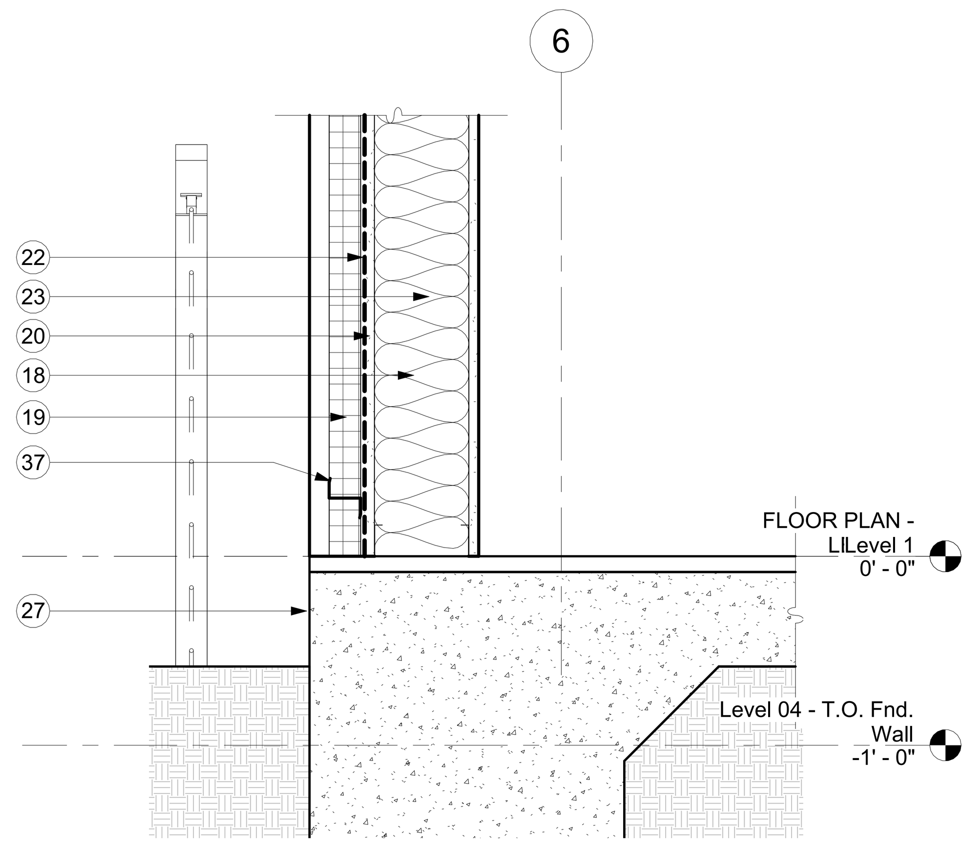

11 A500 DETAIL @ DOCK BASE
SCALE : 1 1/2" = 1'-0"

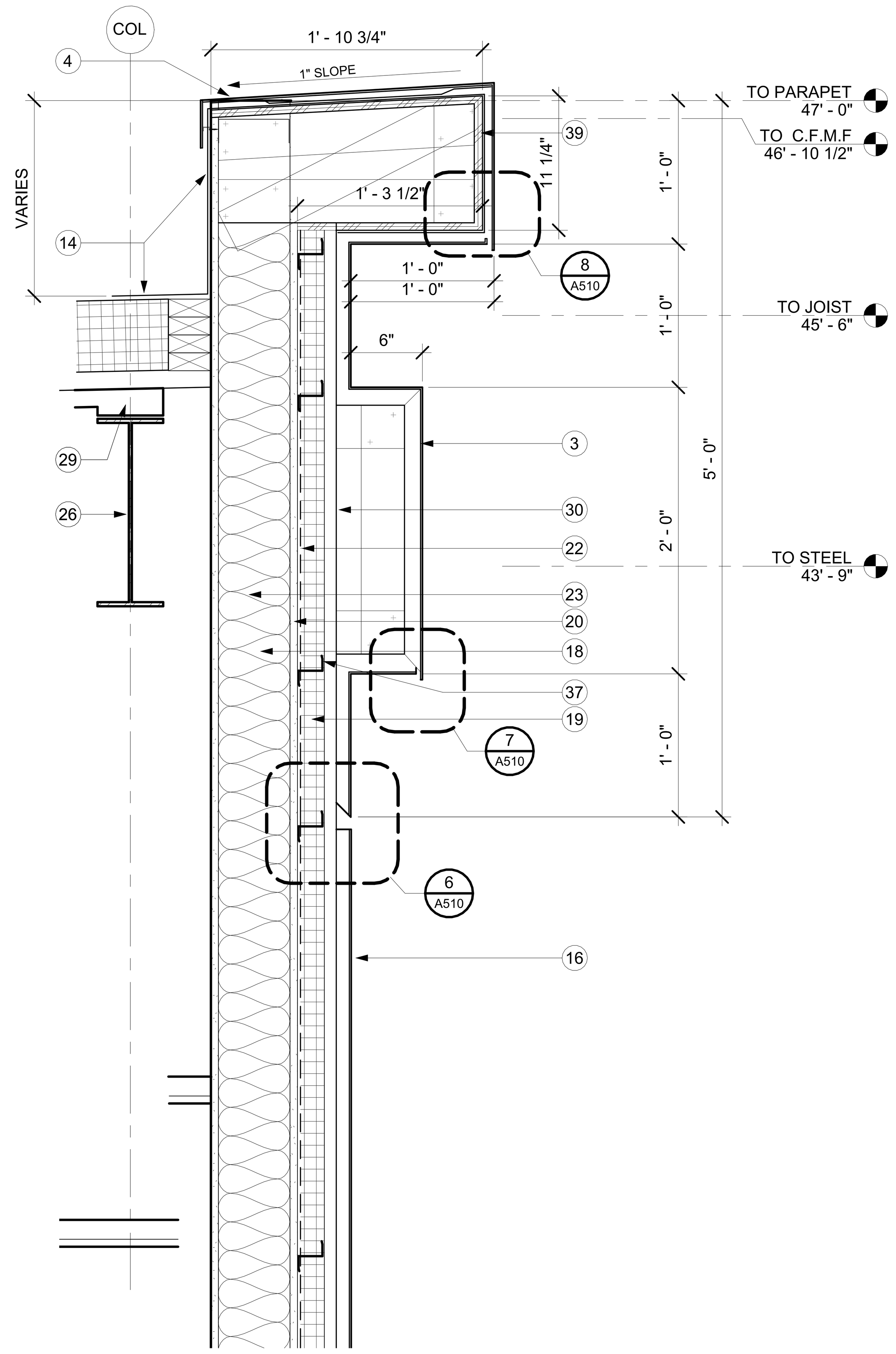

7 A500 PARAPET DETAIL @ METAL PANEL
SCALE : 1 1/2" = 1'-0"

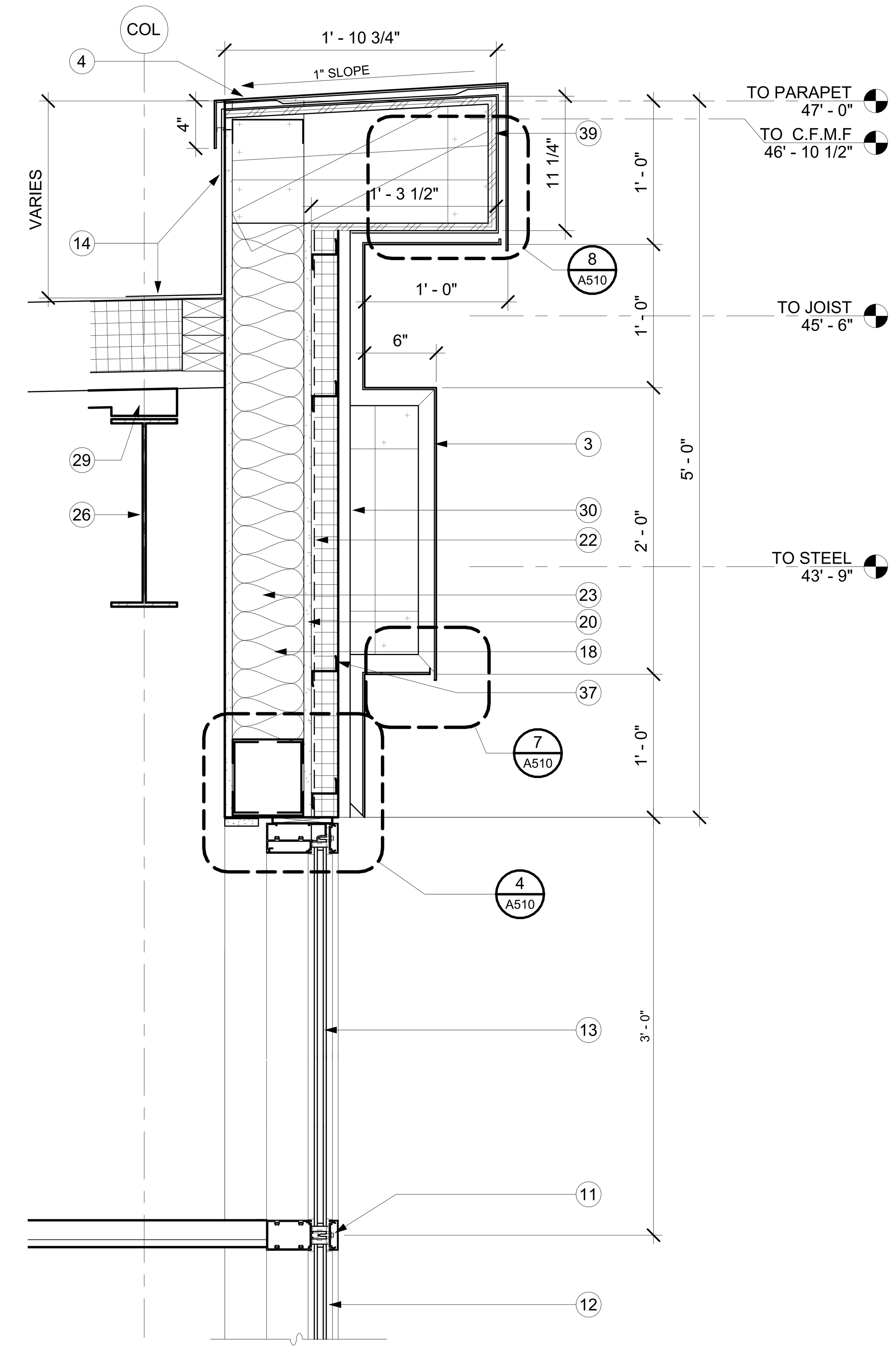

3 A500 TYPICAL PARAPET DETAIL
SCALE : 1 1/2" = 1'-0"

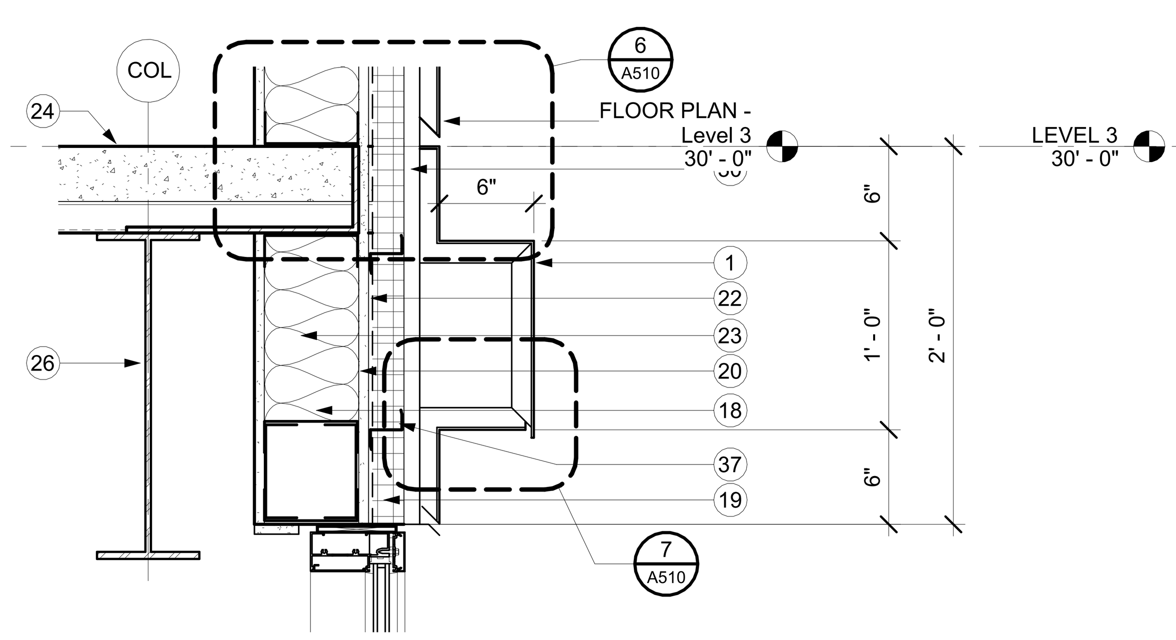

10 A500 FLOOR TRANSITION DETAIL -METAL PANEL TO WINDOW HEAD
SCALE : 1 1/2" = 1'-0"

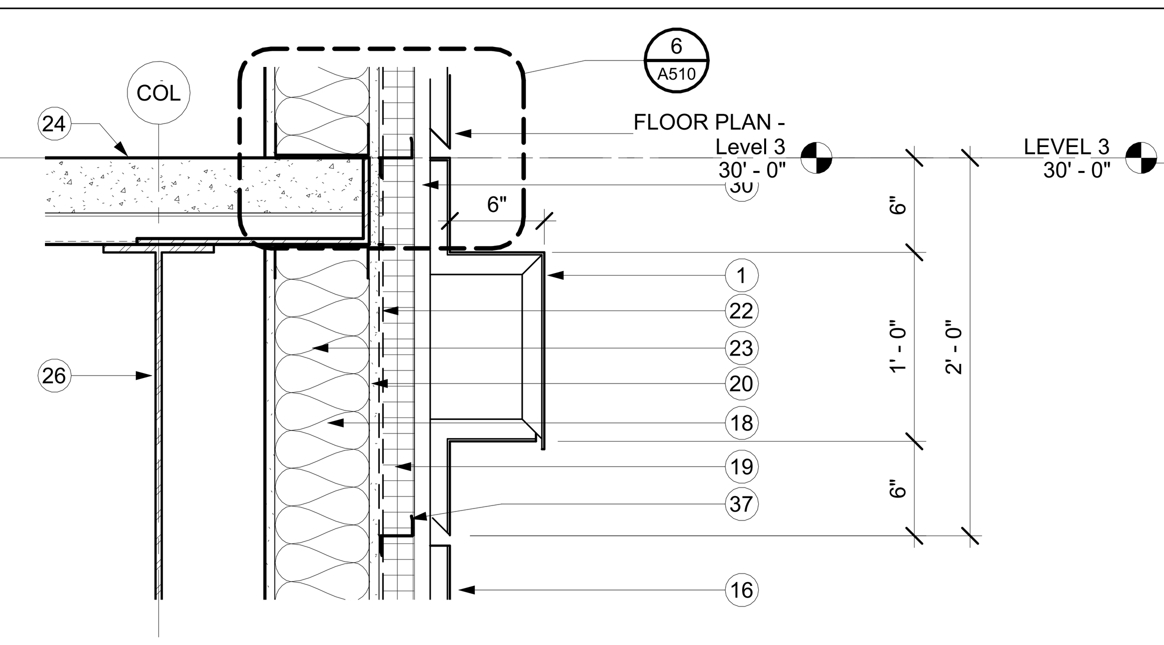

6 A500 FLOOR TRANSITION DETAIL -METAL PANEL TO METAL PANEL
SCALE : 1 1/2" = 1'-0"

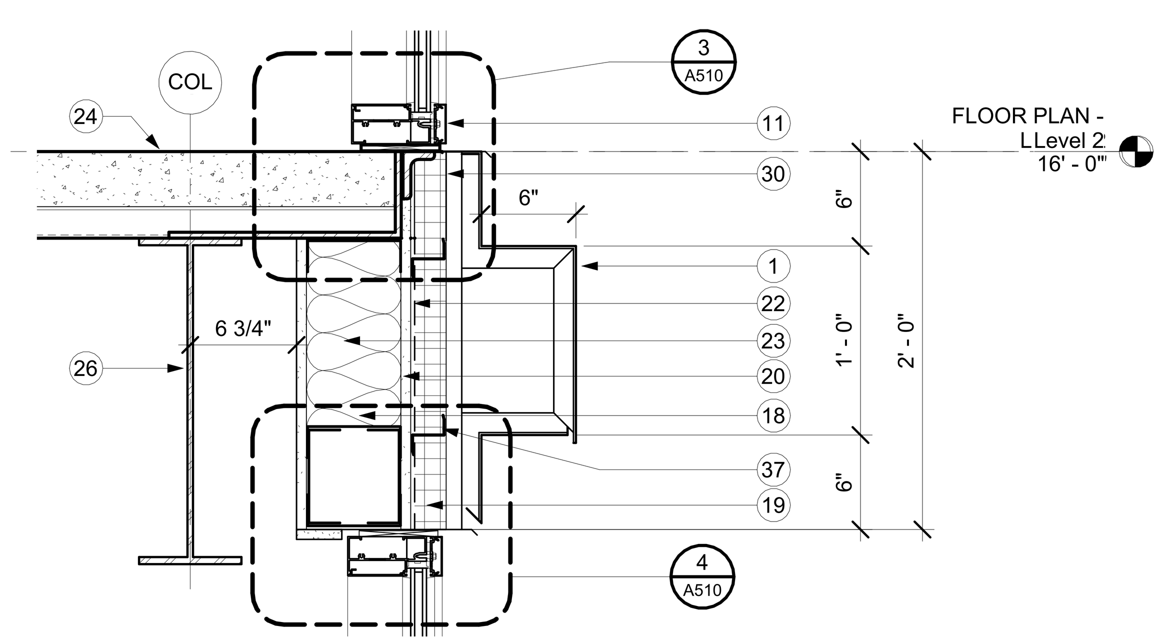

2 A500 FLOOR TRANSITION DETAIL 2ND FLOOR
SCALE : 1 1/2" = 1'-0"

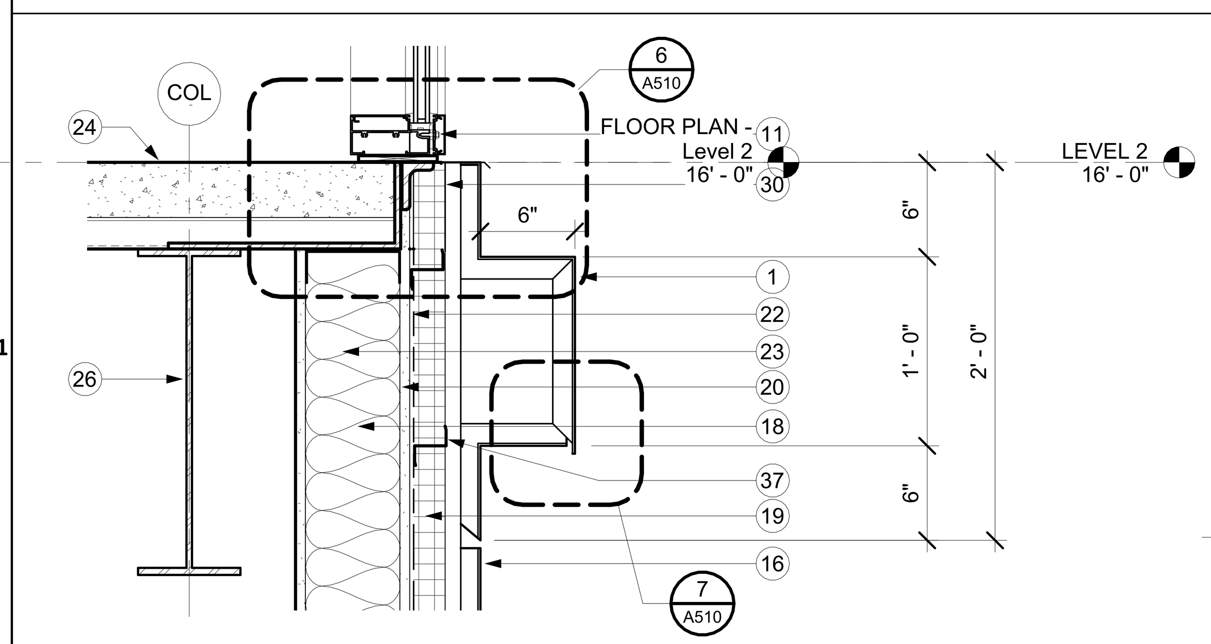

9 A500 FLOOR TRANSITION DETAIL -METAL PANEL TO WINDOW SILL
SCALE : 1 1/2" = 1'-0"

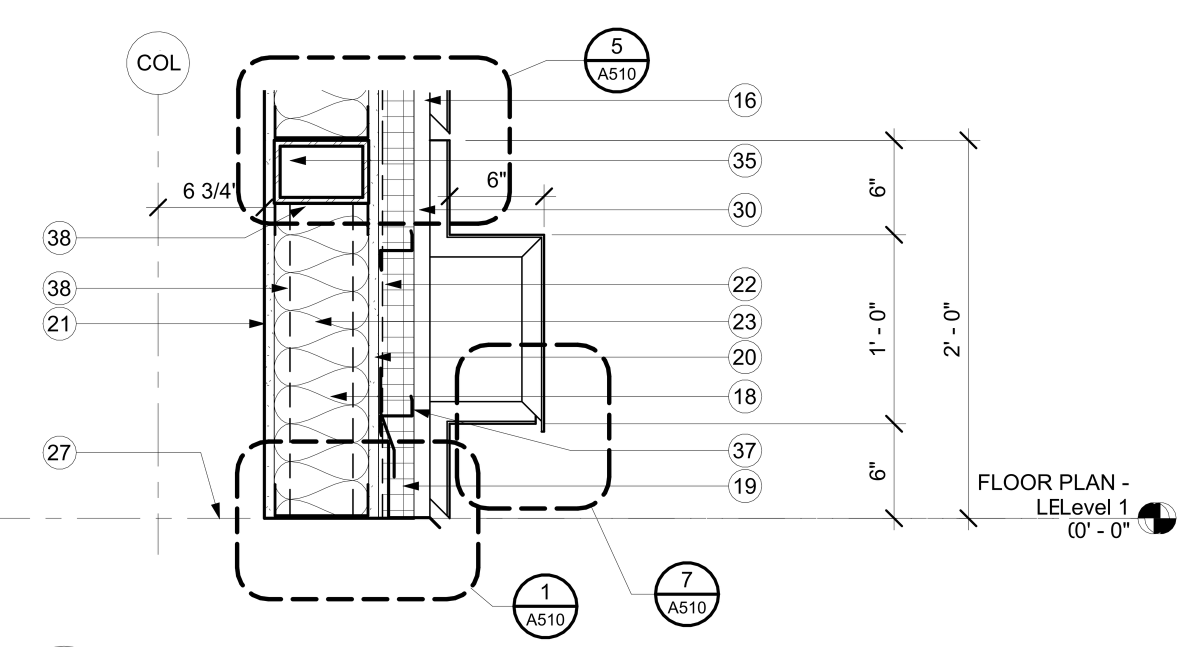

5 A500 BASE DETAIL @ METAL PANEL
SCALE : 1 1/2" = 1'-0"

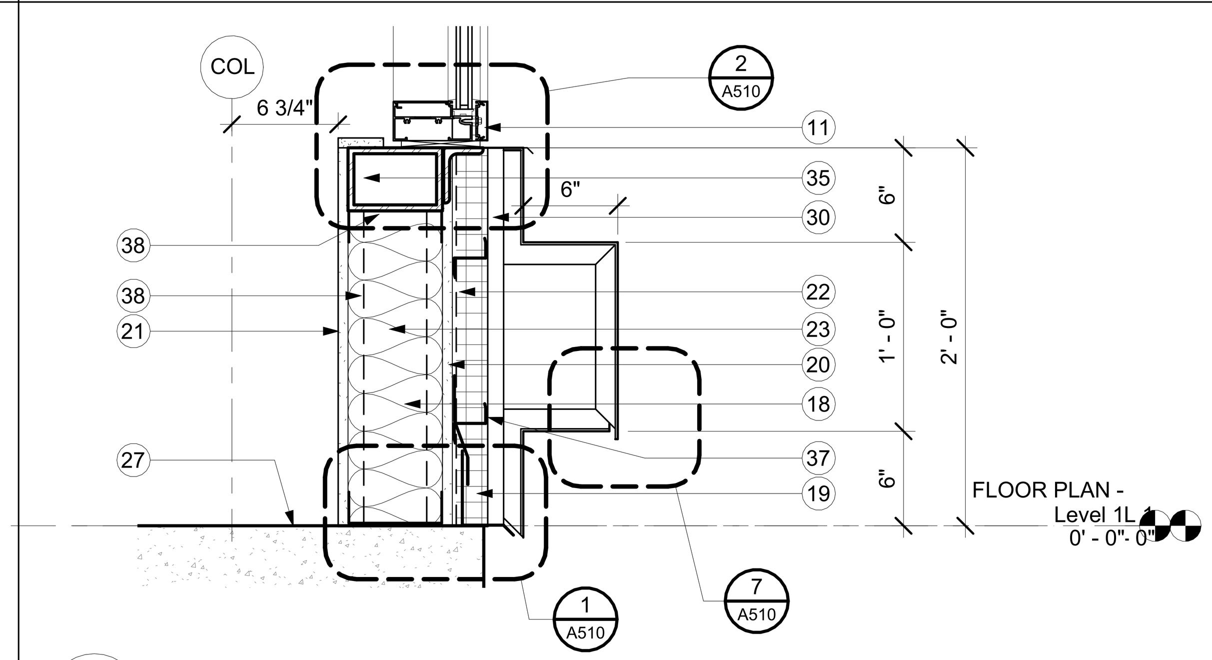

1 A500 TYPICAL BASE DETAIL
SCALE : 1 1/2" = 1'-0"

KEY NOTES

1 METAL PANEL BAND.
2 EYEBROW CANOPY.
3 METAL BAND AT PARAPET.
4 METAL PANEL COPING.
5 PERFORATED METAL PANEL.
6 CONCRETE FILLED METAL PAN STAIRS.
7 HDG RAILING.
8 PAINTED STEEL HANDRAIL.
9 PERFORATED STAINLESS STEEL GUARDRAIL INFILL PANEL.
10 GLASS GUARDRAIL SYSTEM.
11 ALUMINUM CURTAINWALL SYSTEM.
12 INSULATED VISION GLAZING.
13 INSULATED SPANDREL GLAZING.
14 TPO MEMBRANE ROOFING
15 ELEVATOR SHAFT WITH FIRE-RATED ENCLOSURE.
16 METAL PANEL WALL SYSTEM.
17 FEATURE METAL PANEL WALL.
18 THERMAL FIBERGLASS INSULATION.
19 MINERAL WOOL INSULATION.
20 5/8" GYPSUM BOARD SHEATHING.
21 5/8" GYPSUM BOARD.
22 FLUID APPLIED AIR AND WATER RESISTIVE BARRIER.
23 6" METAL STUDS.
24 CONCRETE SLAB ON METAL DECK. RE STRUCTURE.
25 STEEL COLUMN
26 STEEL BEAM
27 CONCRETE FOUNDATION AND SLAB
28 CEILING
29 STEEL ROOF JOIST
30 SUBFRAME TO SUPPORT METAL PANEL SYSTEM.
31 PRESSURE TREATED WOOD BLOCKING.
32 STUD TRACK.
33 EYEBROW CANOPY LIGHT.
34 ROOF COVER SHEATHING.
35 CONTINOUS HORIZONTAL WALL SUPPORT. RE : STRUCTURE.
36 CURTAINWALL SYSTEM
37 Z GIRTS
38 STEEL POST
39 PLYWOOD SHEATHING
40 BACKER ROD AND SEALANT
41 ALUMINUM FLASHING
42 FLASHING MEMBRANE
43 C.F.M.F. BOX BEAM HEADER
44 BENT PLATE AT SLAB EDGE
45 STEEL ANGLE
46 TAPERED INSULATION.
47 SPRAY FOAM INSULATION
48 METAL ROOF PANEL
49 ROOF INSULATION
50 TAPERED ROOF INSULATION
51 2" METAL STUDS
52 EDGE BEAD
53 4" DEEP PERFORATED METAL PANEL SYSTEM
54 TRANSLUCENT ACRYLIC PANEL 1/4" FROSTED WHITE
55 LED FIXTURE
56 2" RIGID INSULATION ON FLUID APPLIED AIR AND WATER RESISTIVE BARRIER ON 5/8" SHEATHING ON 6" COLD FORMED METAL FRAME @ 16" O.C. WITH BATT INSULATION
57 WATERPROOF MEMBRANE ON 3/4" P.T. PLYWOOD ON 'Z' GIRTS ON 2" RIGID INSULATION ON FLUID APPLIED AIR AND WATER RESISTIVE BARRIER ON 5/8" SHEATHING ON 6" COLD FORMED METAL FRAMING @ 16" O.C.
58 WOOD SLATS
59 ALUMINUM COMPOSITE PANEL
60 AIR AND WATER RESISTIVE BARRIER ON 5/8" GYPSUM SHEATHING
61 C.F.M.F. WALL SYSTEM

FSGROUP®
ARCHITECTS
16575 Village Drive
Houston Texas 77040
713 344 1752 PH
fsdesignbuild.com

PROJECT NAME

INFORMATION TECHNOLGY BUILDING
1419 EUGENE HEIMANN CIRCLE
FORT BEND COUNTY . RICHMOND . TEXAS 77469

CONSULTANTS

PROFESSIONAL SEAL

ISSUED FOR
ISSUED FOR PROPOSALS AND PERMIT

REVISIONS

No.	DESCRIPTION	DATE

KEY PLAN

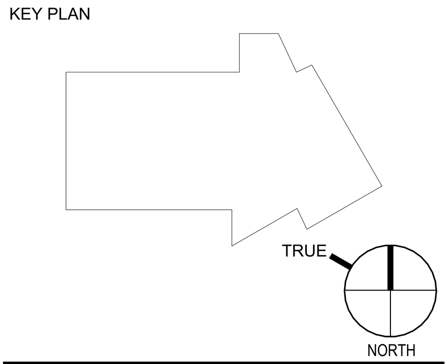

SHEET TITLE
SECTION DETAILS

SCALE As indicated
DATE 05/15/2024
PROJECT NUMBER 2319
SHEET NUMBER
A500

PLOT DATE: 5/21/2024 5:09:34 PM
FILE PATH: Autodesk Docs://FBC IT Building/FBIT_A23.rvt

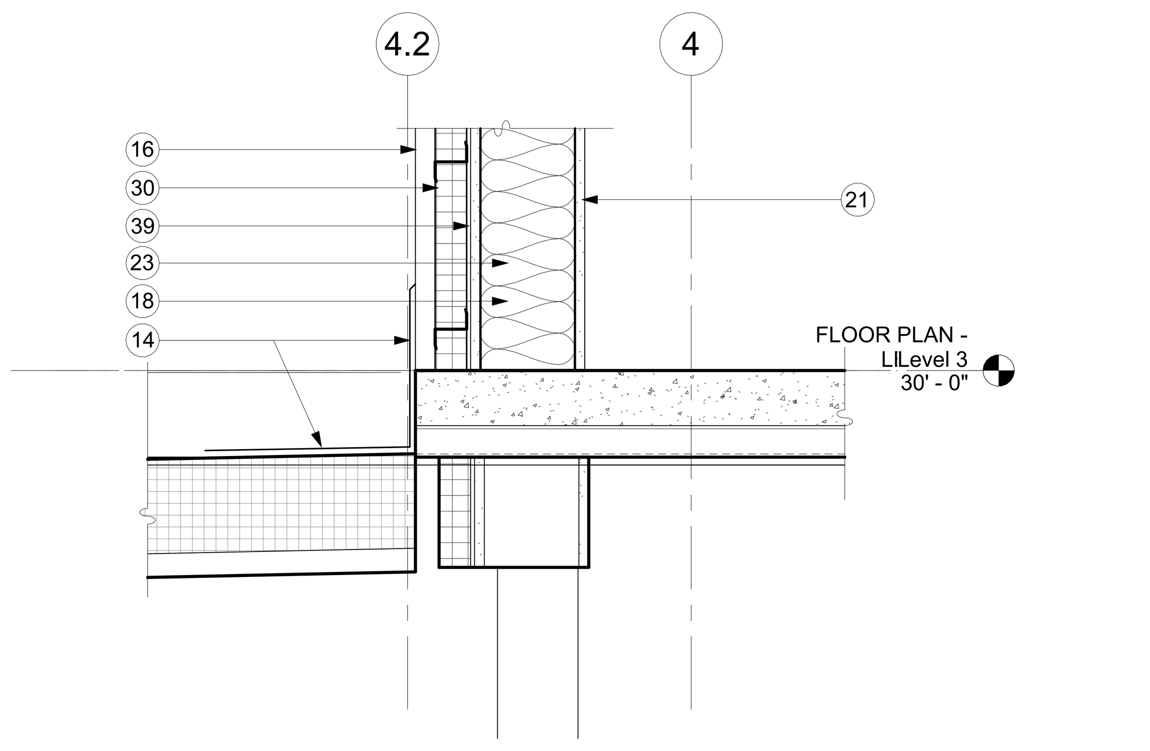

12 A501 DETAIL @ DOCK ROOF
SCALE : 1 1/2" = 1'-0"

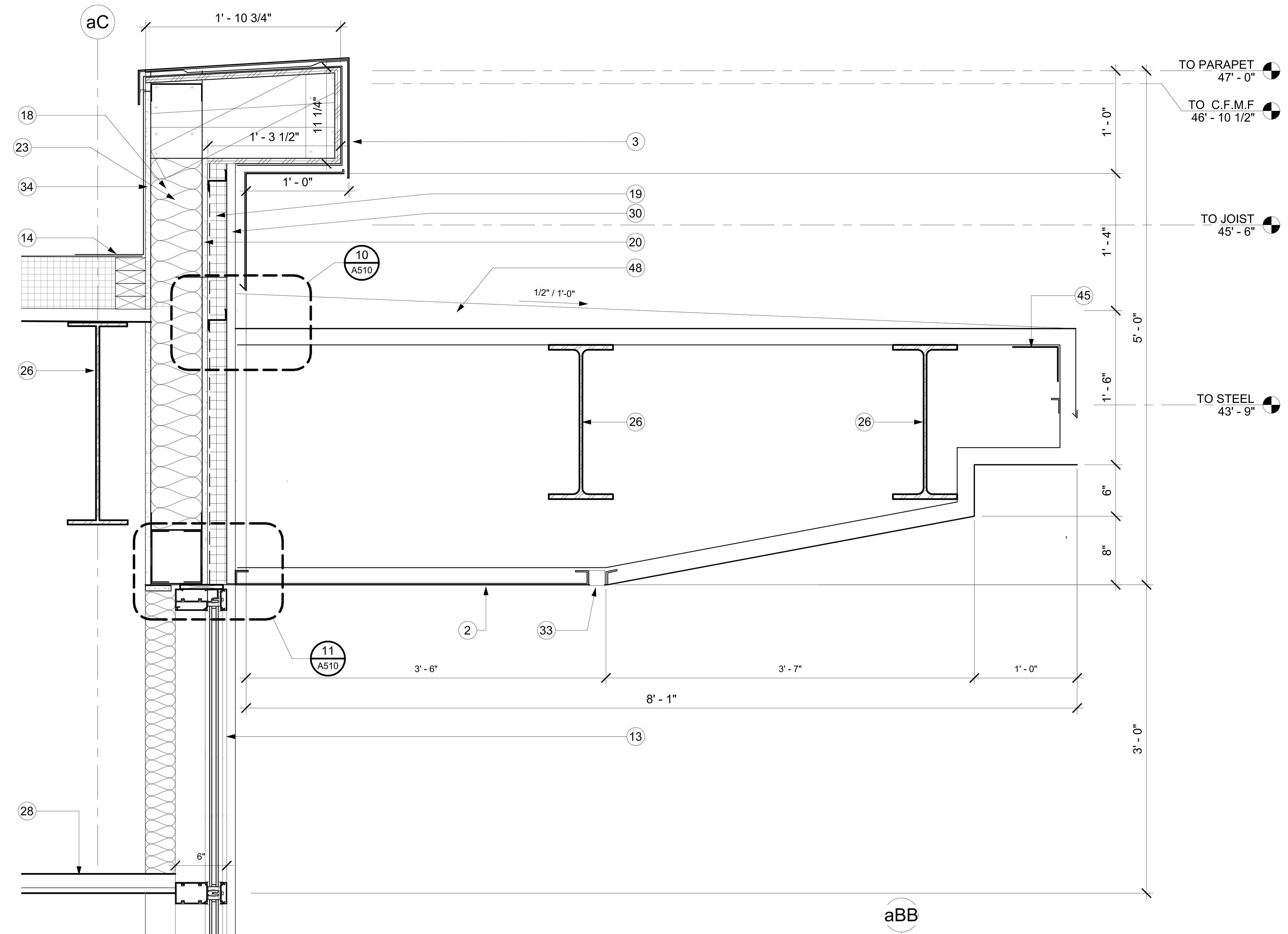

7 A501 PARAPET DETAIL AT CANOPY
SCALE : 1 1/2" = 1'-0"

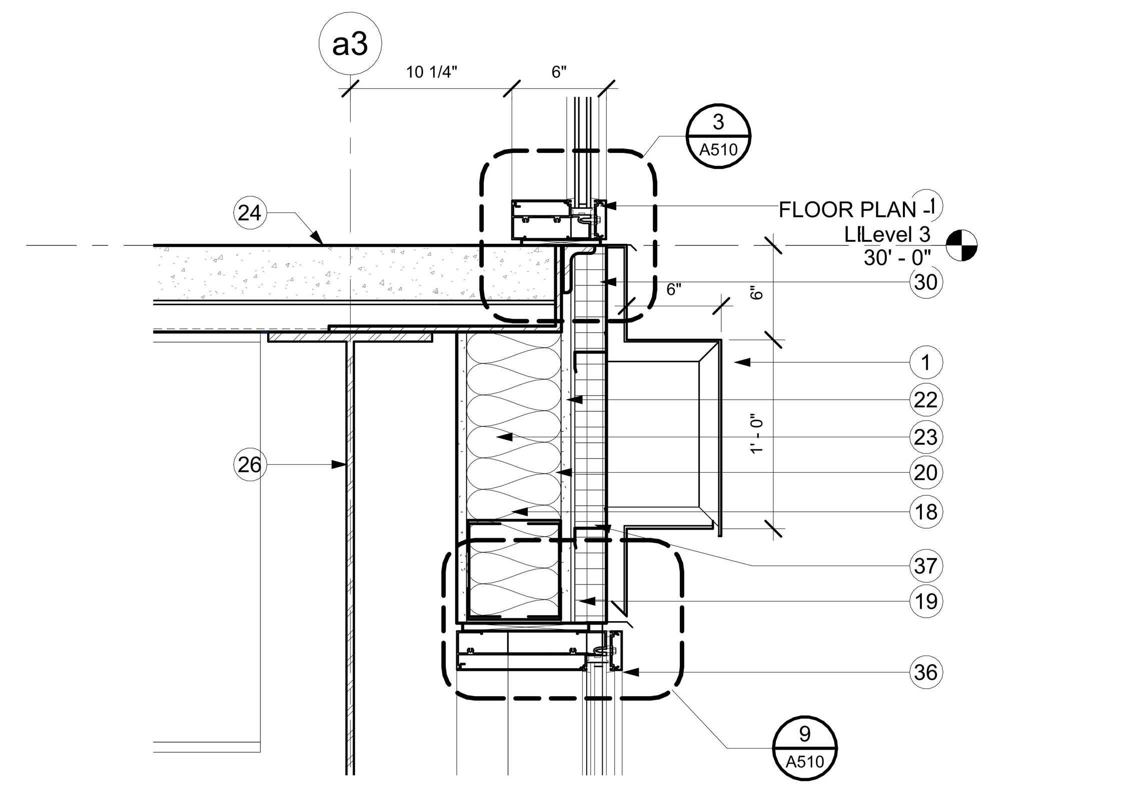

11 A501 FLOOR TRANSITION DETAIL AT CURTAINWALL
SCALE : 1 1/2" = 1'-0"

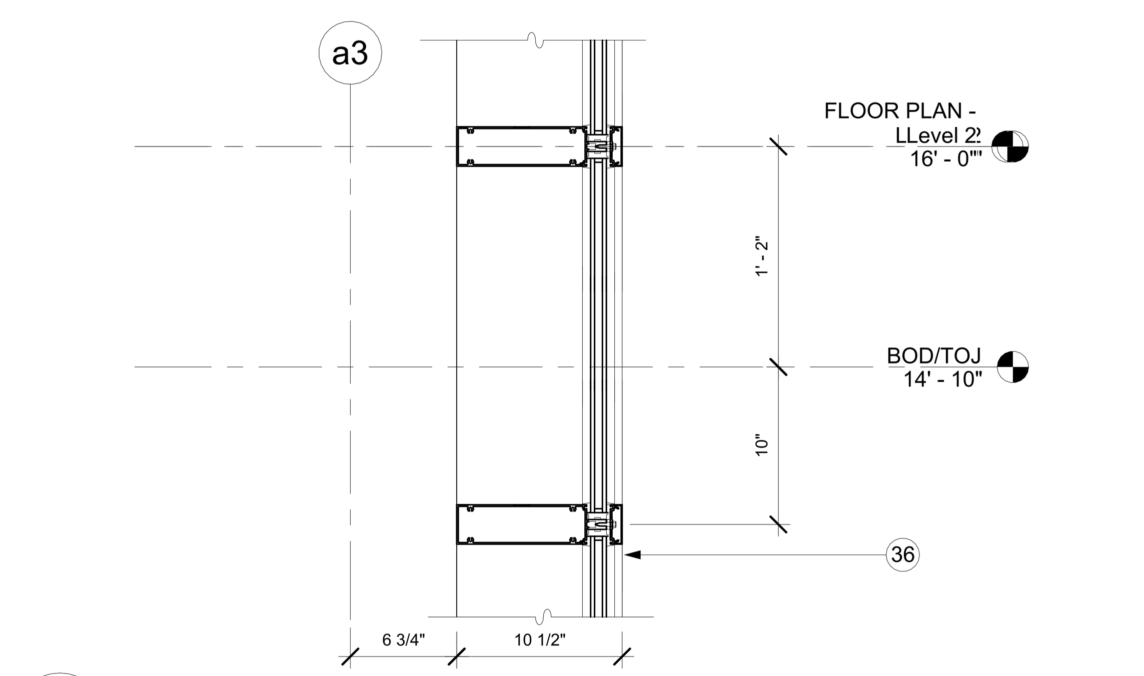

10 A501 DETAIL @ ENTRY LEVEL 2
SCALE : 1 1/2" = 1'-0"

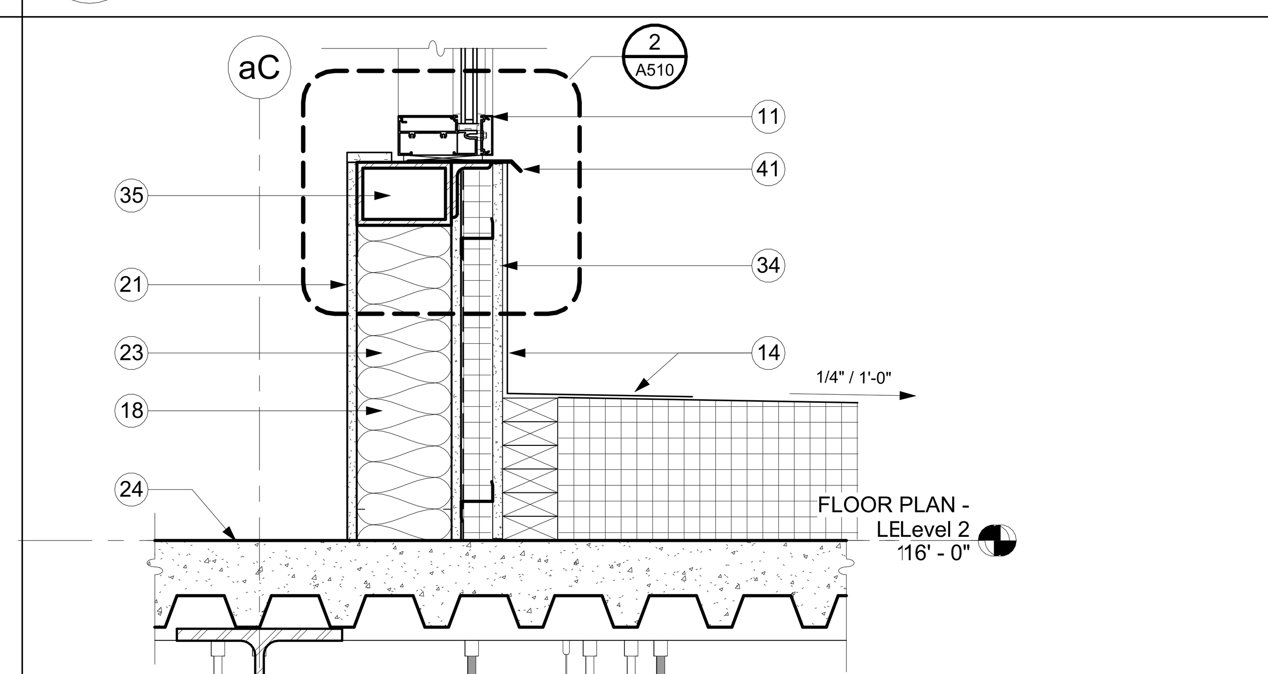

6 A501 DETAIL @ LVL 2 PARAPET
SCALE : 1 1/2" = 1'-0"

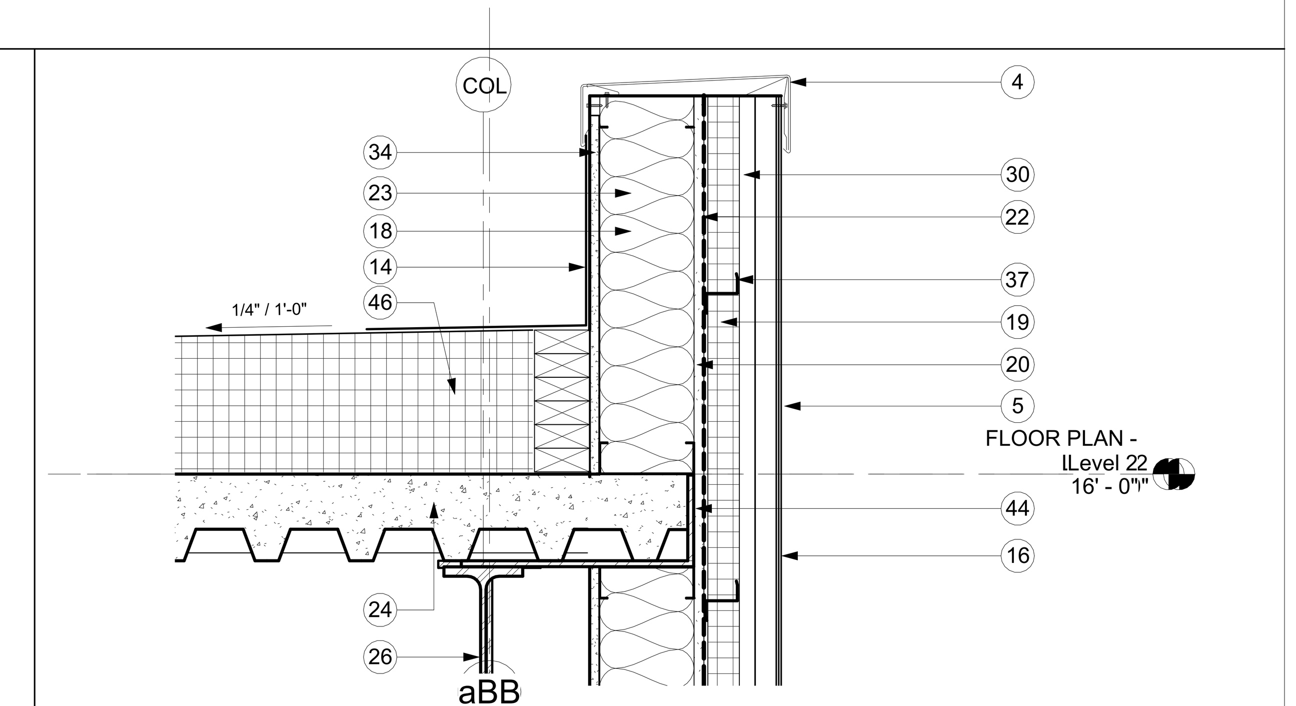

2 A501 DETAIL @ LVL 2 PARAPET
SCALE : 1 1/2" = 1'-0"

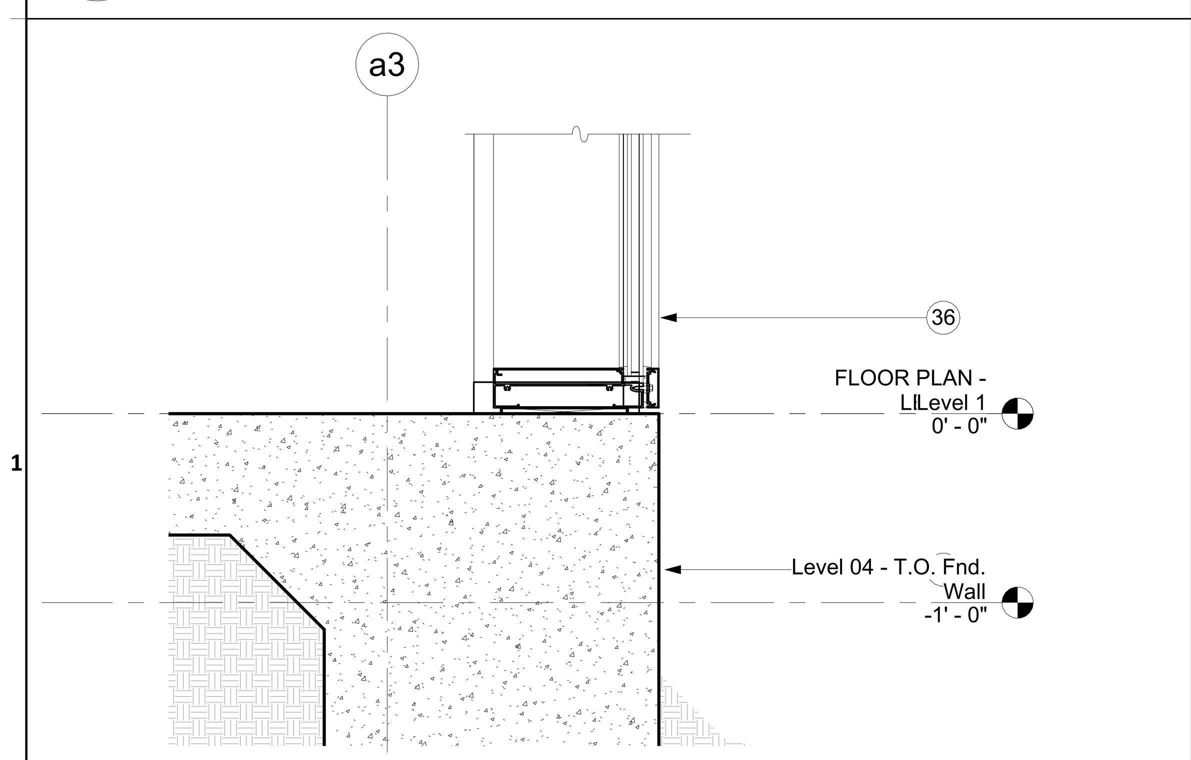

9 A501 DETAIL @ LOBBY BASE
SCALE : 1 1/2" = 1'-0"

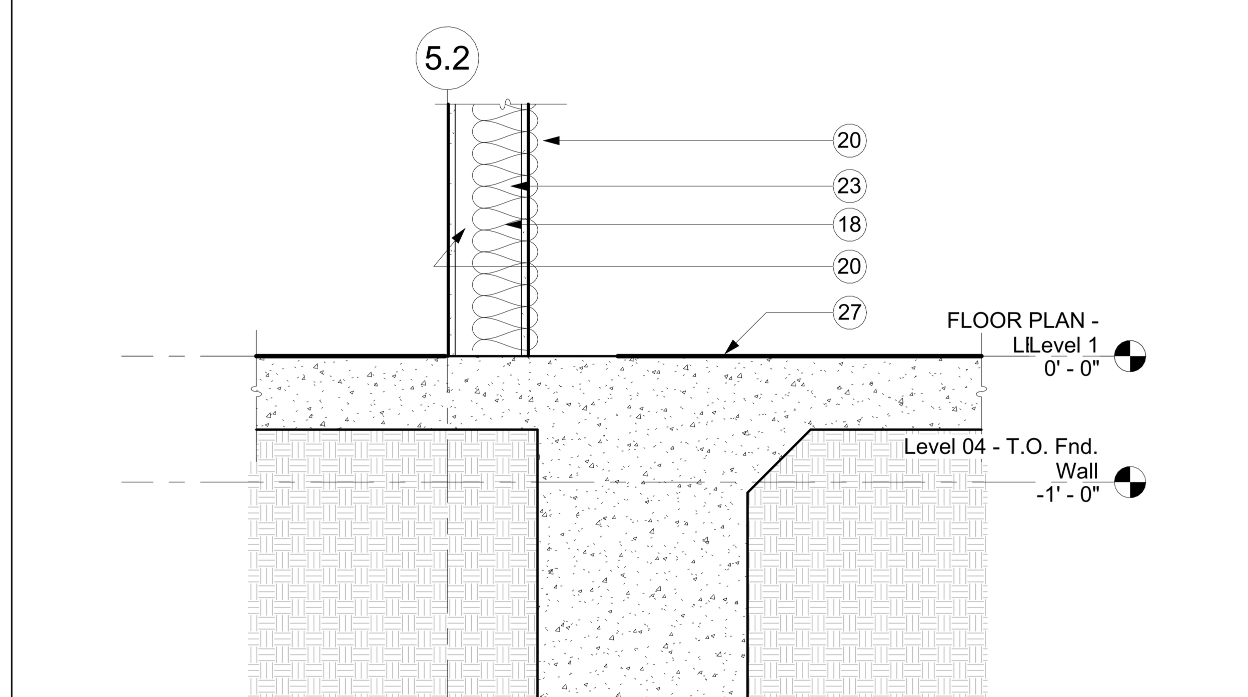

5 A501 DETAIL @ LOADING AREA BASE
SCALE : 1" = 1'-0"

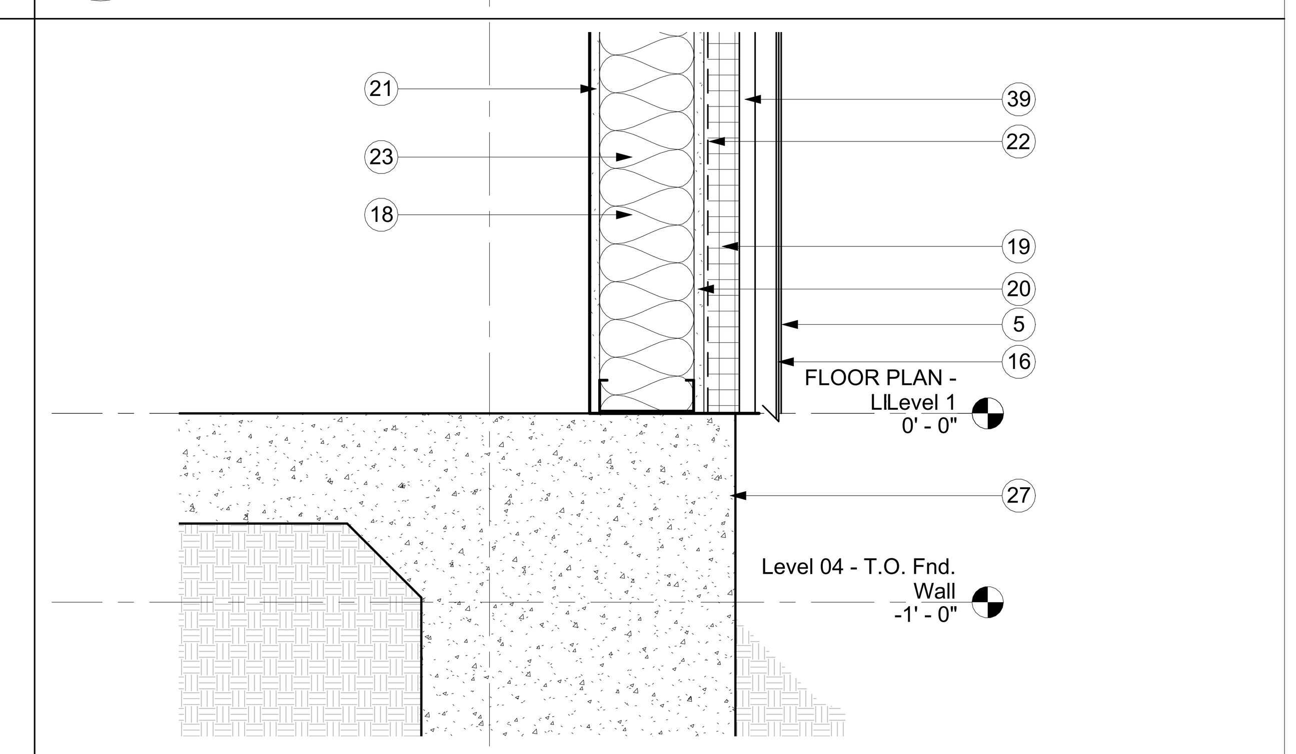

1 A501 DETAIL @ PERF. METAL BASE
SCALE : 1 1/2" = 1'-0"

KEY NOTES

1 METAL PANEL BAND.
2 EYEBROW CANOPY.
3 METAL BAND AT PARAPET.
4 METAL PANEL COPING.
5 PERFORATED METAL PANEL.
6 CONCRETE FILLED METAL PAN STAIRS.
7 HDG RAILING.
8 PAINTED STEEL HANDRAIL.
9 PERFORATED STAINLESS STEEL GUARDRAIL INFILL PANEL.
10 GLASS GUARDRAIL SYSTEM.
11 ALUMINUM CURTAINWALL SYSTEM.
12 INSULATED VISION GLAZING.
13 INSULATED SPANDREL GLAZING.
14 TPO MEMBRANE ROOFING
15 ELEVATOR SHAFT WITH FIRE-RATED ENCLOSURE.
16 METAL PANEL WALL SYSTEM.
17 FEATURE METAL PANEL WALL.
18 THERMAL FIBERGLASS INSULATION.
19 MINERAL WOOL INSULATION.
20 5/8" GYPSUM BOARD SHEATHING.
21 5/8" GYPSUM BOARD.
22 FLUID APPLIED AIR AND WATER RESISTIVE BARRIER.
23 6" METAL STUDS.
24 CONCRETE SLAB ON METAL DECK. RE STRUCTURE.
25 STEEL COLUMN
26 STEEL BEAM
27 CONCRETE FOUNDATION AND SLAB
28 CEILING
29 STEEL ROOF JOIST
30 SUBFRAME TO SUPPORT METAL PANEL SYSTEM.
31 PRESSURE TREATED WOOD BLOCKING.
32 STUD TRACK.
33 EYEBROW CANOPY LIGHT.
34 ROOF COVER SHEATHING.
35 CONTINOUS HORIZONTAL WALL SUPPORT. RE : STRUCTURE.
36 CURTAINWALL SYSTEM
37 Z GIRTS
38 STEEL POST
39 PLYWOOD SHEATHING
40 BACKER ROD AND SEALANT
41 ALUMINUM FLASHING
42 FLASHING MEMBRANE
43 C.F.M.F. BOX BEAM HEADER
44 BENT PLATE AT SLAB EDGE
45 STEEL ANGLE
46 TAPERED INSULATION.
47 SPRAY FOAM INSULATION
48 METAL ROOF PANEL
49 ROOF INSULATION
50 TAPERED ROOF INSULATION
51 2" METAL STUDS
52 EDGE BEAD
53 4" DEEP PERFORATED METAL PANEL SYSTEM
54 TRANSLUCENT ACRYLIC PANEL 1/4" FROSTED WHITE
55 LED FIXTURE
56 2" RIGID INSULATION ON FLUID APPLIED AIR AND WATER RESISTIVE BARRIER ON 5/8" SHEATHING ON 6" COLD FORMED METAL FRAME @ 16" O.C. WITH BATT INSULATION
57 WATERPROOF MEMBRANE ON 3/4" P.T. PLYWOOD ON 'Z' GIRTS ON 2" RIGID INSULATION ON FLUID APPLIED AIR AND WATER RESISTIVE BARRIER ON 5/8" SHEATHING ON 6" COLD FORMED METAL FRAMING @ 16" O.C.
58 WOOD SLATS
59 ALUMINUM COMPOSITE PANEL
60 AIR AND WATER RESISTIVE BARRIER ON 5/8" GYPSUM SHEATHING
61 C.F.M.F. WALL SYSTEM

FSGROUP® ARCHITECTS
16575 Village Drive
Houston Texas 77040
713 344 1752 PH
fsdesignbuild.com

PROJECT NAME

INFORMATION TECHNOLGY BUILDING
1419 EUGENE HEIMANN CIRCLE
FORT BEND COUNTY . RICHMOND . TEXAS 77469

CONSULTANTS

PROFESSIONAL SEAL

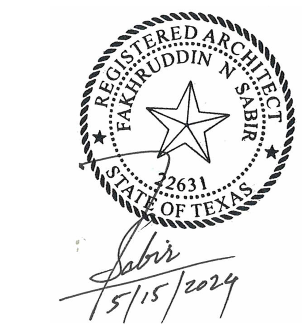

ISSUED FOR
ISSUED FOR PROPOSALS AND PERMIT

REVISIONS

No.	DESCRIPTION	DATE

KEY PLAN

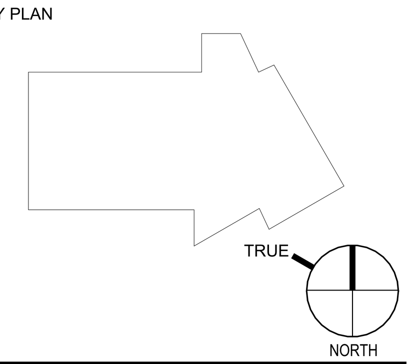

SHEET TITLE
SECTION DETAILS

SCALE As indicated
DATE 05/15/2024
PROJECT NUMBER 2319
SHEET NUMBER
A501

PLOT DATE: 5/21/2024 5:10:04 PM
FILE PATH: Autodesk Docs://FBC IT Building/FBIT_A23.rvt

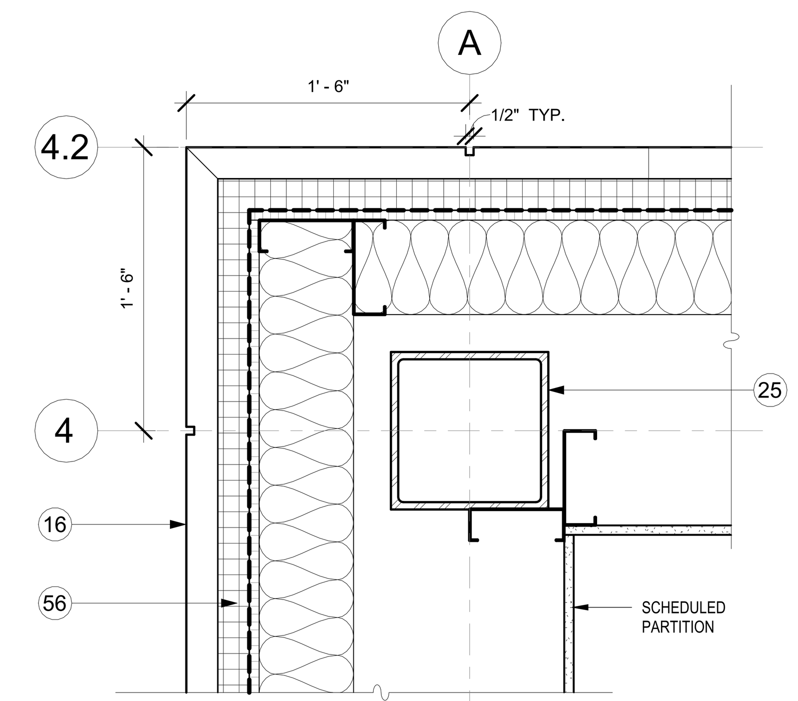

16 A502 PLAN DTL NW CORNER STAIR 2.1
SCALE : 1 1/2" = 1'-0"

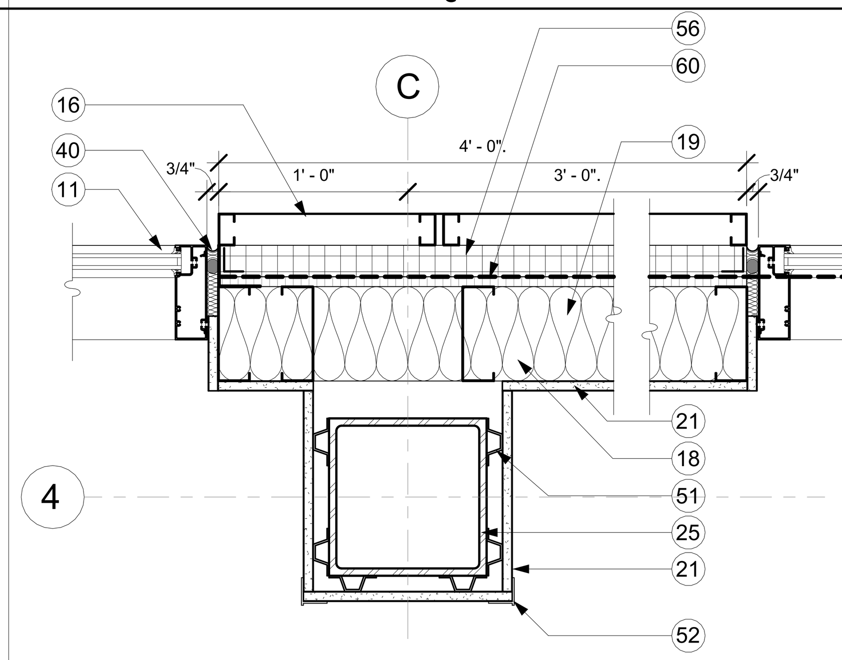

12 A502 PLAN DTL NORTH BULLPEN
SCALE : 1 1/2" = 1'-0"

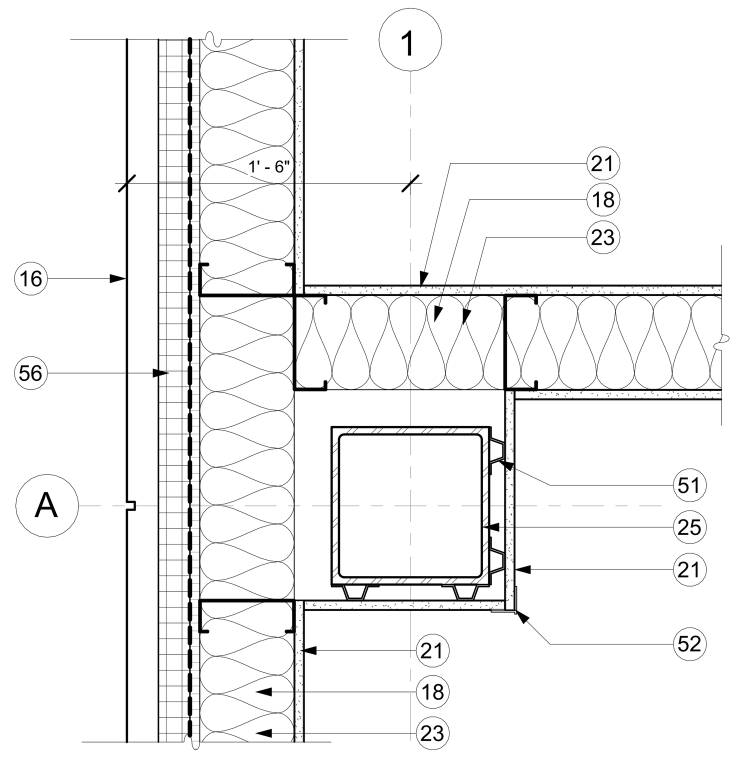

19 A502 PLAN DTL WEST CONF.RM 129
SCALE : 1 1/2" = 1'-0"

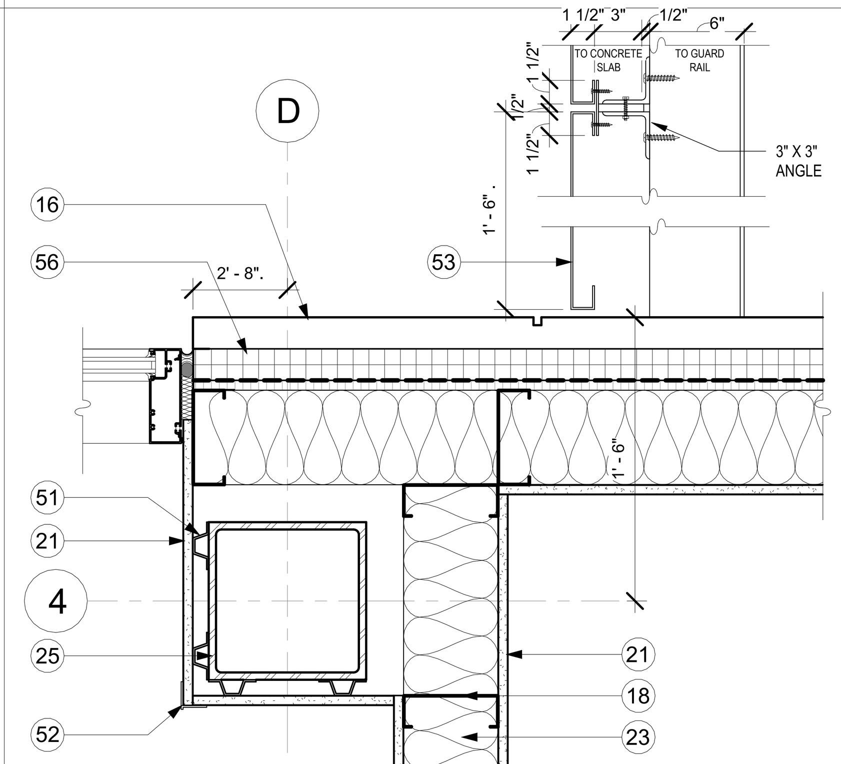

15 A502 PLAN DTL N .RM 129
SCALE : 1 1/2" = 1'-0"

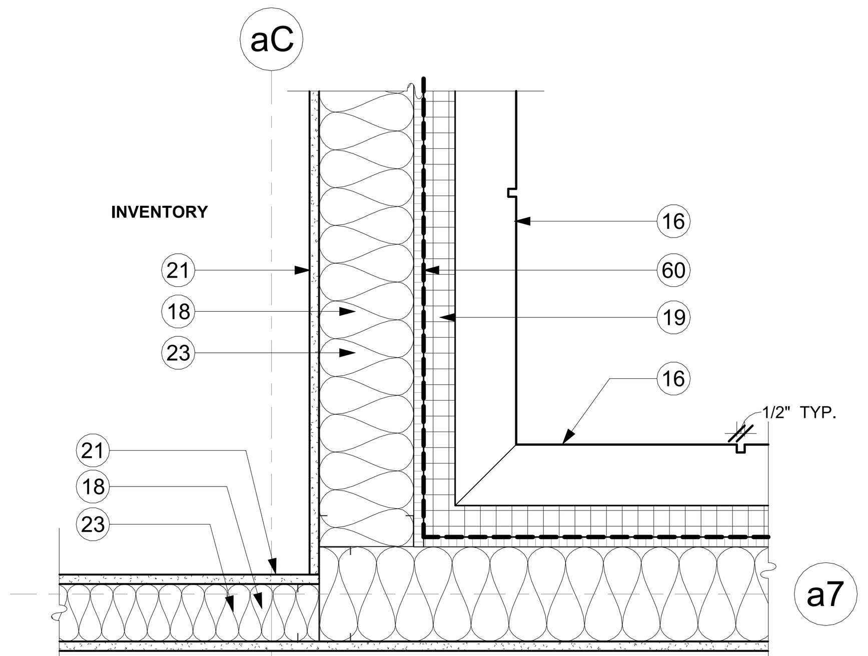

11 A502 PLAN DTL NORTH TRAINING RM
SCALE : 1 1/2" = 1'-0"

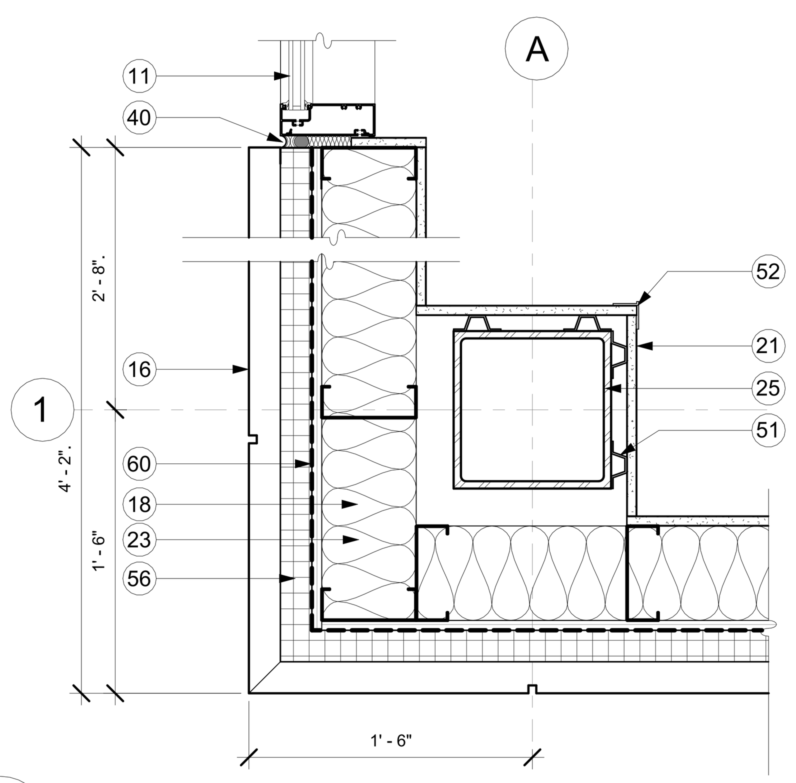

18 A502 PLAN DTL SW CONF.RM 129
SCALE : 1 1/2" = 1'-0"

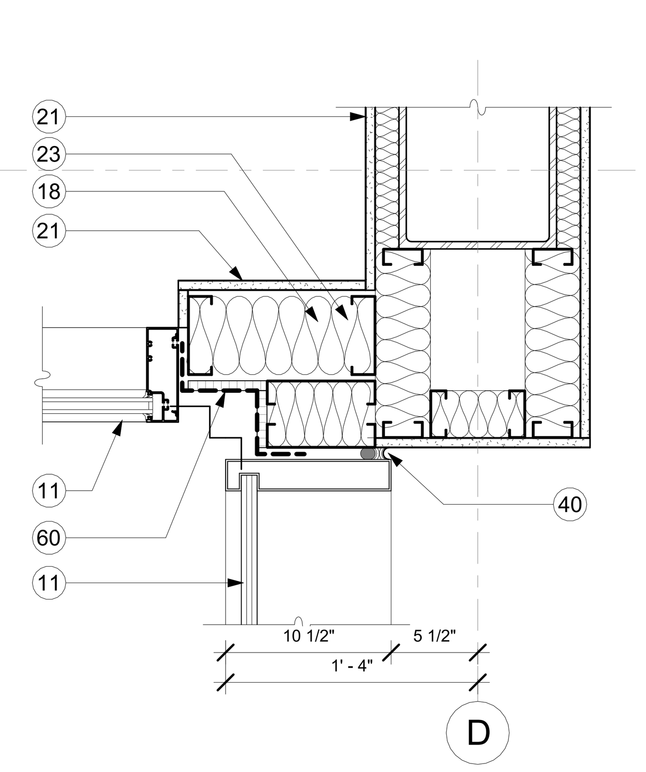

14 A502 PLAN DTL SOUTH LOBBY
SCALE : 1 1/2" = 1'-0"

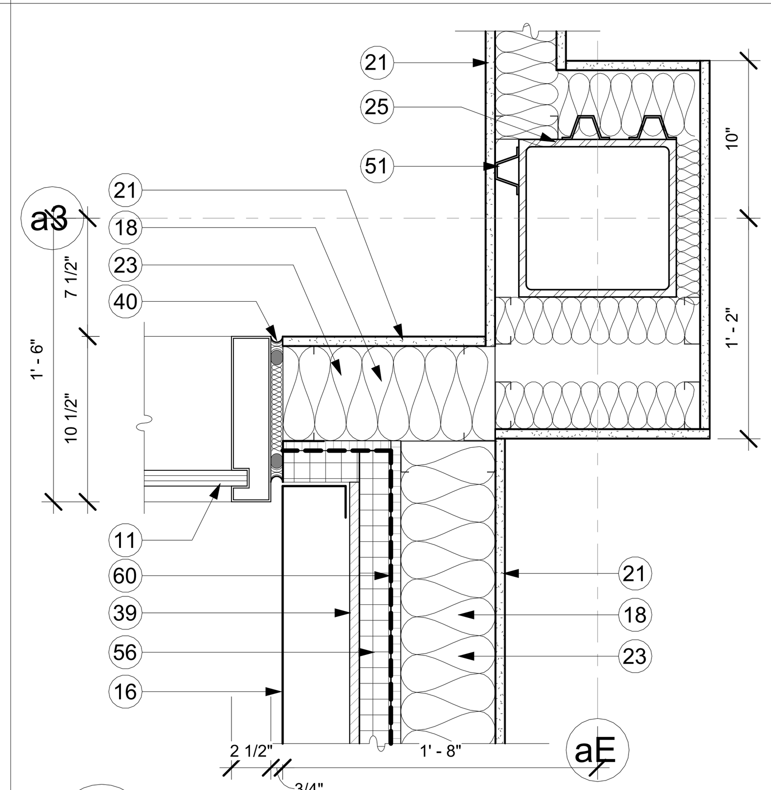

10 A502 PLAN DTL SE LOBBY
SCALE : 1 1/2" = 1'-0"

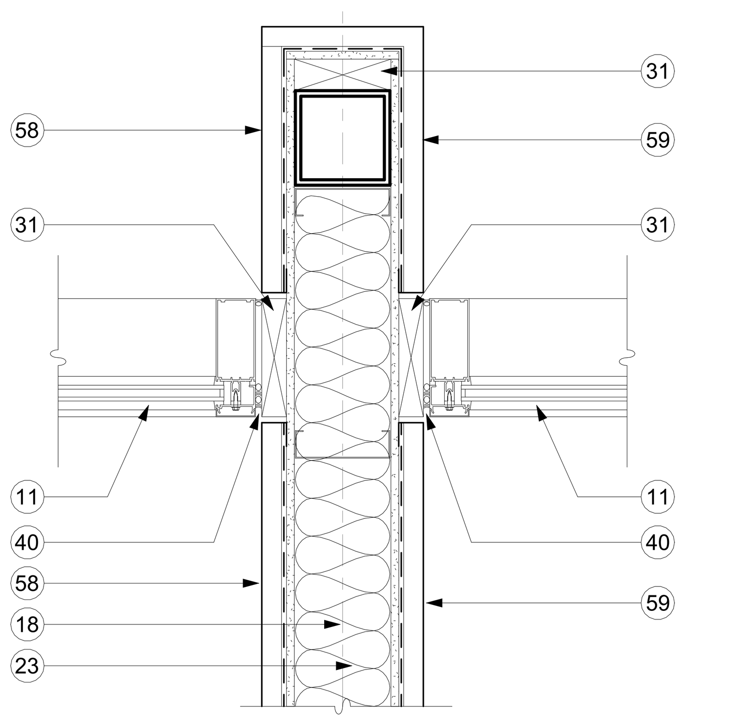

17 A502 PLAN DTL VESTIBULE W CURTAINWALL
SCALE : 1 1/2" = 1'-0"

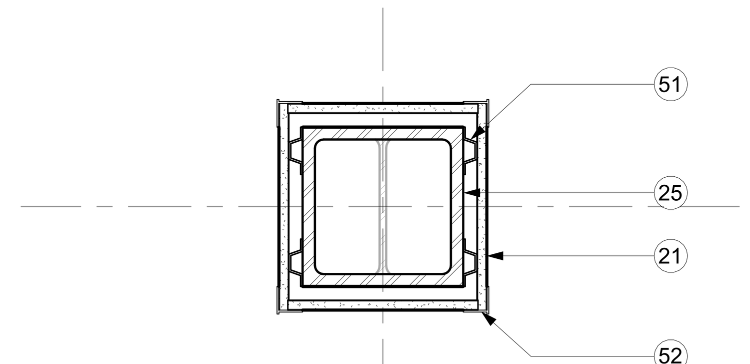

13 A502 STRUCTURAL COLUMN WALL COVER
SCALE : 1 1/2" = 1'-0"

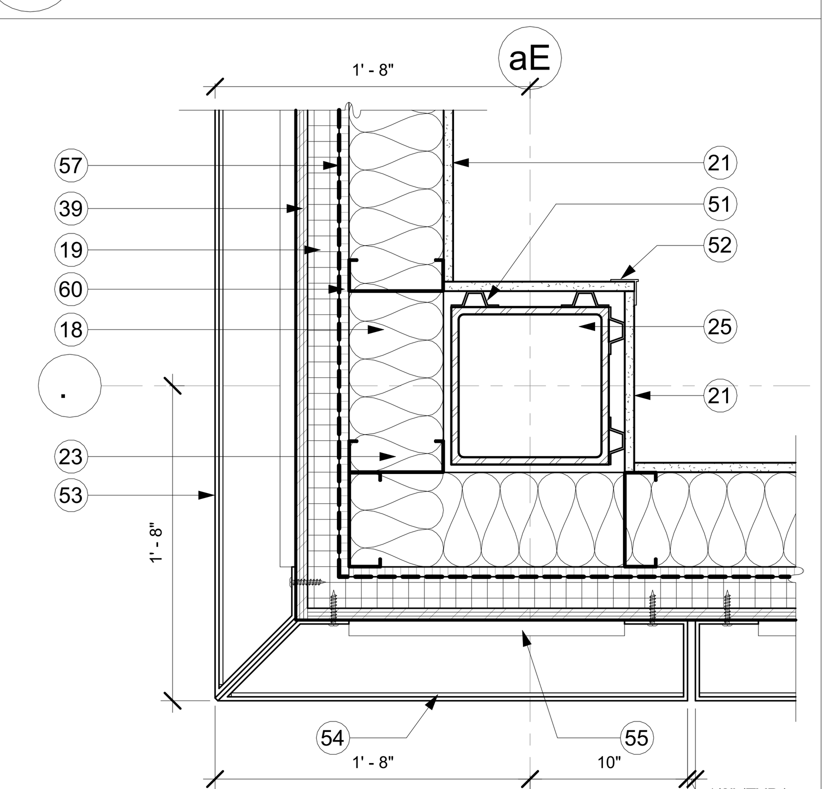

9 A502 PLAN DTL SW TRAINING RM1
SCALE : 1 1/2" = 1'-0"

KEY NOTES

1 METAL PANEL BAND.
2 EYEBROW CANOPY.
3 METAL BAND AT PARAPET.
4 METAL PANEL COPING.
5 PERFORATED METAL PANEL.
6 CONCRETE FILLED METAL PAN STAIRS.
7 HDG RAILING.
8 PAINTED STEEL HANDRAIL.
9 PERFORATED STAINLESS STEEL GUARDRAIL INFILL PANEL.
10 GLASS GUARDRAIL SYSTEM.
11 ALUMINUM CURTAINWALL SYSTEM.
12 INSULATED VISION GLAZING.
13 INSULATED SPANDREL GLAZING.
14 TPO MEMBRANE ROOFING
15 ELEVATOR SHAFT WITH FIRE-RATED ENCLOSURE.
16 METAL PANEL WALL SYSTEM.
17 FEATURE METAL PANEL WALL.
18 THERMAL FIBERGLASS INSULATION.
19 MINERAL WOOL INSULATION.
20 5/8" GYPSUM BOARD SHEATHING.
21 5/8" GYPSUM BOARD.
22 FLUID APPLIED AIR AND WATER RESISTIVE BARRIER.
23 6" METAL STUDS.
24 CONCRETE SLAB ON METAL DECK. RE STRUCTURE.
25 STEEL COLUMN
26 STEEL BEAM
27 CONCRETE FOUNDATION AND SLAB
28 CEILING
29 STEEL ROOF JOIST
30 SUBFRAME TO SUPPORT METAL PANEL SYSTEM.
31 PRESSURE TREATED WOOD BLOCKING.
32 STUD TRACK.
33 EYEBROW CANOPY LIGHT.
34 ROOF COVER SHEATHING.
35 CONTINOUS HORIZONTAL WALL SUPPORT. RE : STRUCTURE.
36 CURTAINWALL SYSTEM
37 Z GIRTS
38 STEEL POST
39 PLYWOOD SHEATHING
40 BACKER ROD AND SEALANT
41 ALUMINUM FLASHING
42 FLASHING MEMBRANE
43 C.F.M.F. BOX BEAM HEADER
44 BENT PLATE AT SLAB EDGE
45 STEEL ANGLE
46 TAPERED INSULATION.
47 SPRAY FOAM INSULATION
48 METAL ROOF PANEL
49 ROOF INSULATION
50 TAPERED ROOF INSULATION
51 2" METAL STUDS
52 EDGE BEAD
53 4" DEEP PERFORATED METAL PANEL SYSTEM
54 TRANSLUCENT ACRYLIC PANEL 1/4" FROSTED WHITE
55 LED FIXTURE
56 2" RIGID INSULATION ON FLUID APPLIED AIR AND WATER RESISTIVE BARRIER ON 5/8" SHEATHING ON 6" COLD FORMED METAL FRAME @ 16" O.C. WITH BATT INSULATION
57 WATERPROOF MEMBRANE ON 3/4" P.T. PLYWOOD ON 'Z' GIRTS ON 2" RIGID INSULATION ON FLUID APPLIED AIR AND WATER RESISTIVE BARRIER ON 5/8" SHEATHING ON 6" COLD FORMED METAL FRAMING @ 16" O.C.
58 WOOD SLATS
59 ALUMINUM COMPOSITE PANEL
60 AIR AND WATER RESISTIVE BARRIER ON 5/8" GYPSUM SHEATHING
61 C.F.M.F. WALL SYSTEM

FSGROUP ARCHITECTS
16575 Village Drive
Houston Texas 77040
713 344 1752 PH
fsdesignbuild.com

PROJECT NAME

INFORMATION TECHNOLGY BUILDING
1419 EUGENE HEIMANN CIRCLE
FORT BEND COUNTY . RICHMOND . TEXAS 77469

CONSULTANTS

PROFESSIONAL SEAL

ISSUED FOR
ISSUED FOR PROPOSALS AND PERMIT

REVISIONS

No.	DESCRIPTION	DATE

KEY PLAN

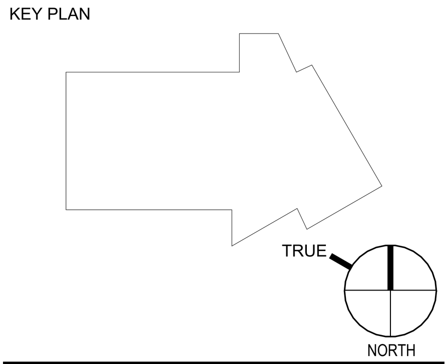

SHEET TITLE
DETAILS

SCALE: As indicated
DATE: 05/15/2024
PROJECT NUMBER: 2319
SHEET NUMBER
A502

FILE PATH: Autodesk Docs://FBC IT Building/FBIT_A23.rvt
PLOT DATE: 5/21/2024 5:10:21 PM

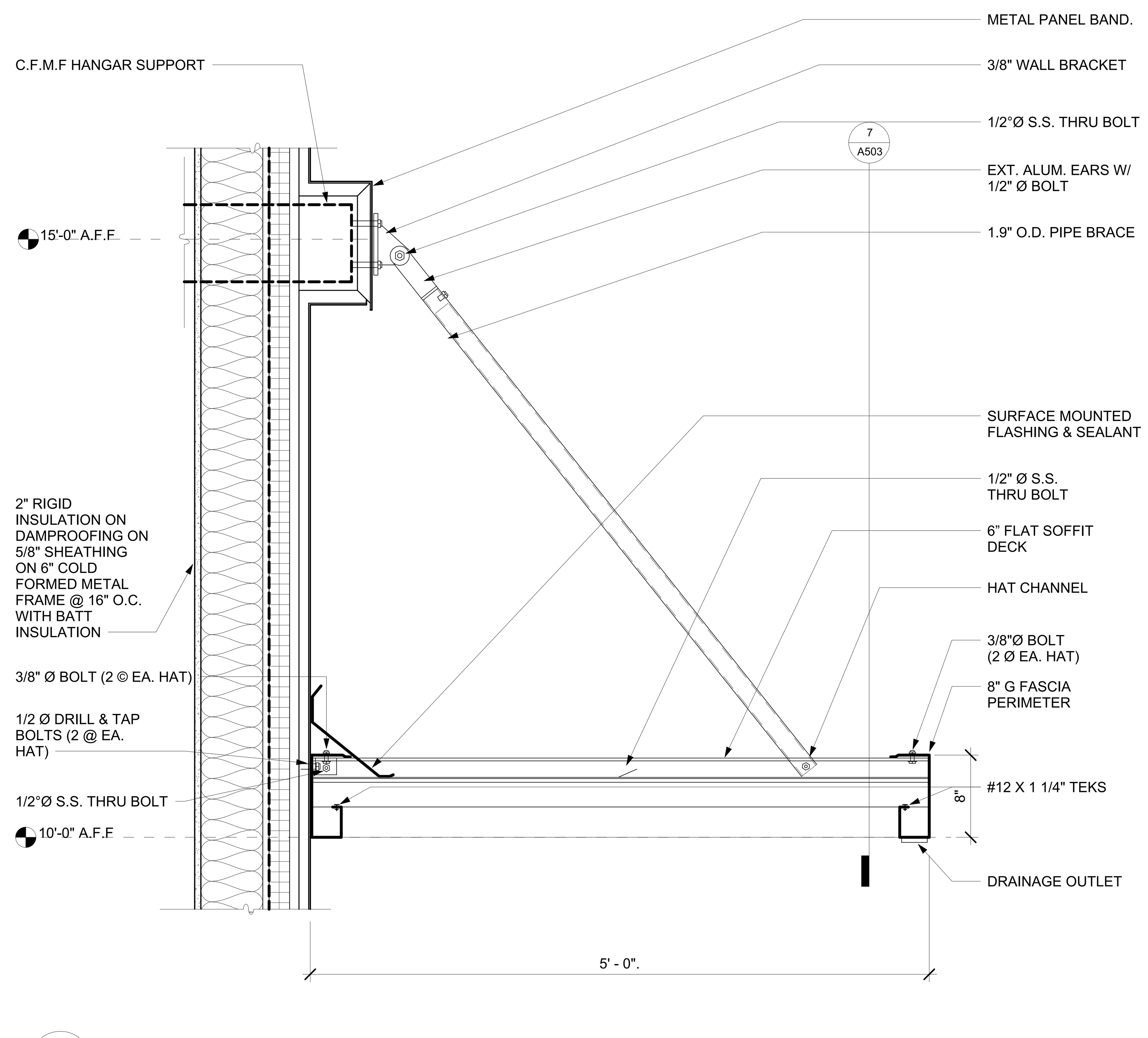

15 A503 AWNING CANOPY CROSS SECTION: SIDE
SCALE : 1 1/2" = 1'-0"

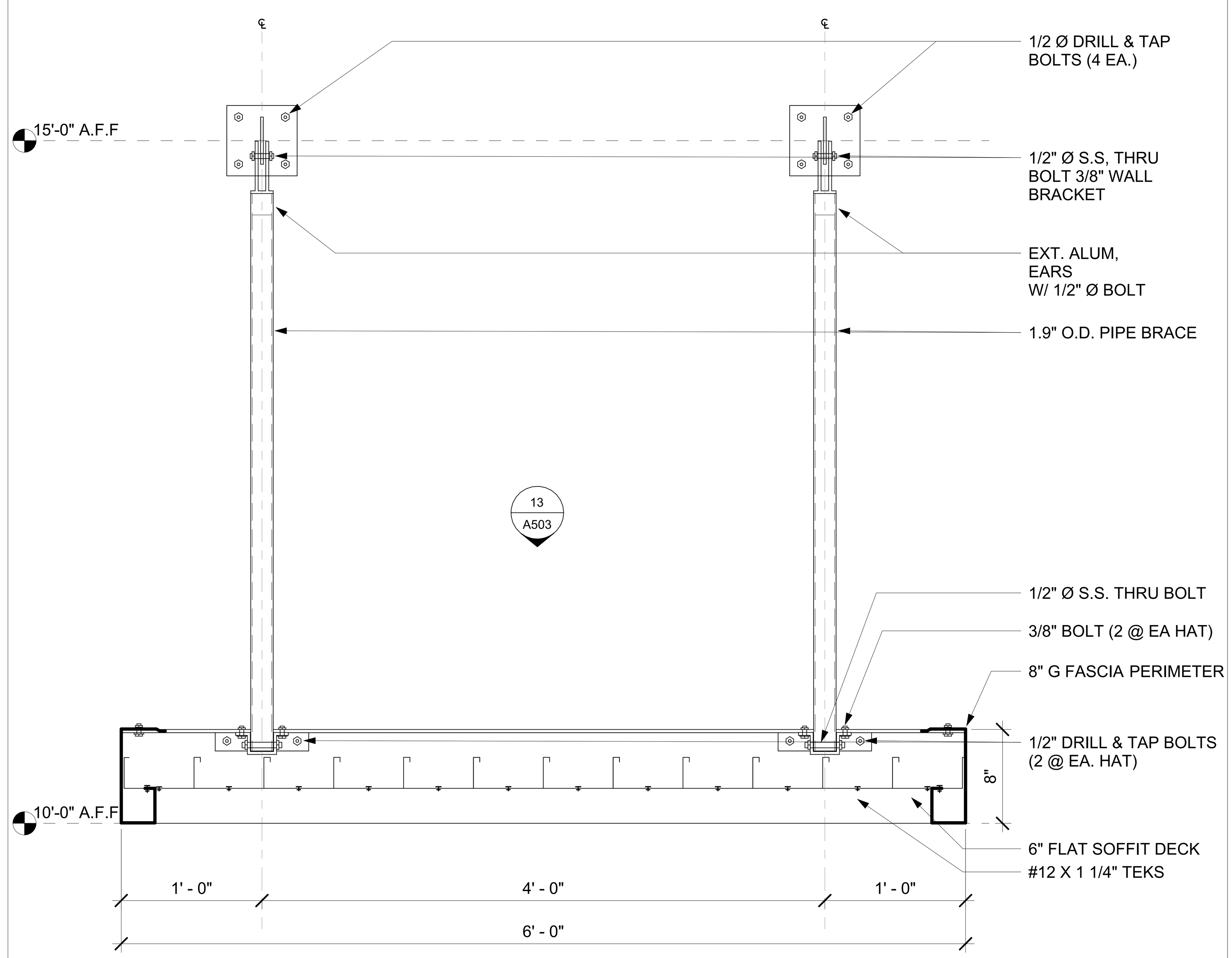

7 A503 AWNING CANOPY CROSS SECTION: FRONT
SCALE : 1 1/2" = 1'-0"

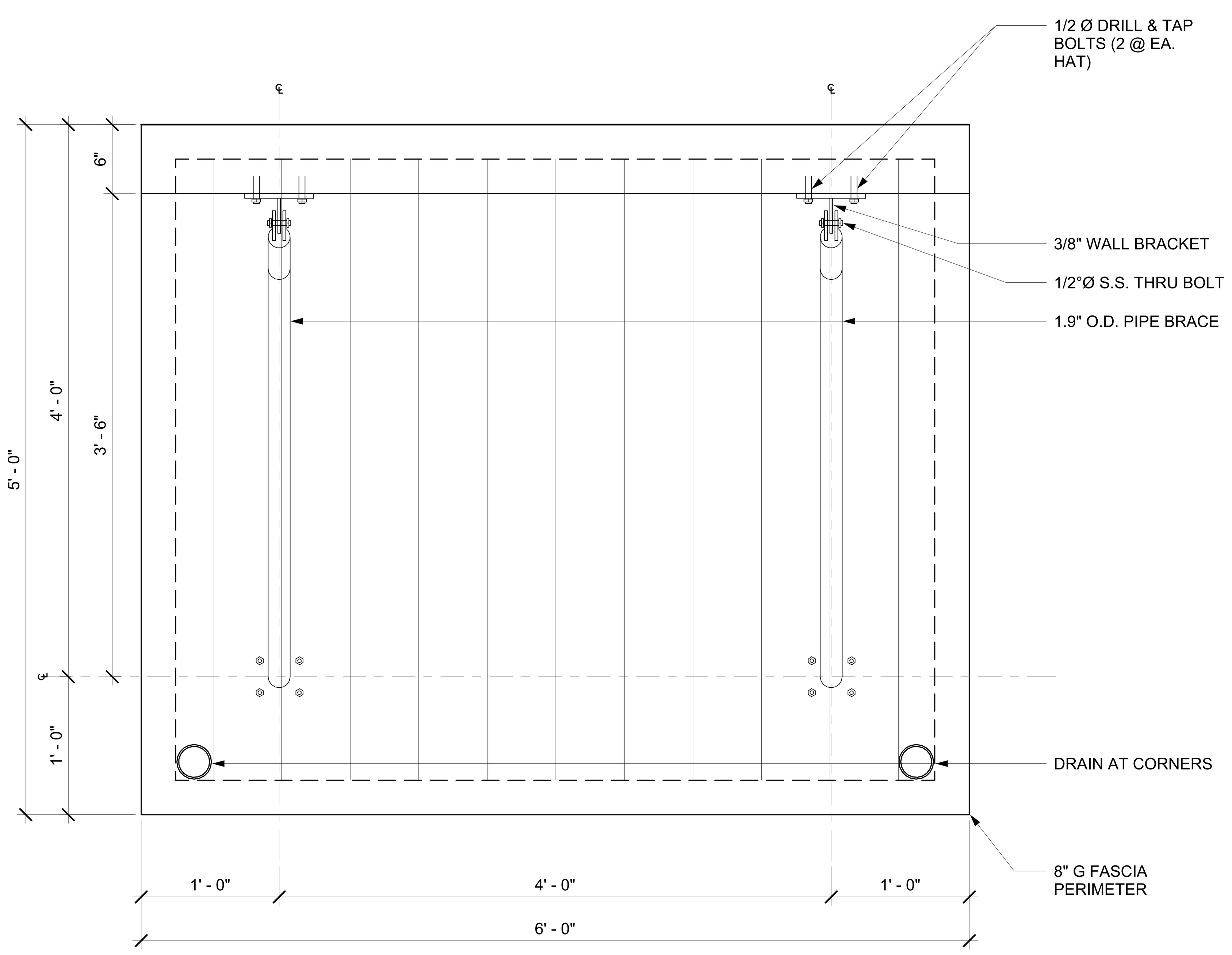

13 A503 AWNING CANOPY PLAN
SCALE : 1 1/2" = 1'-0"

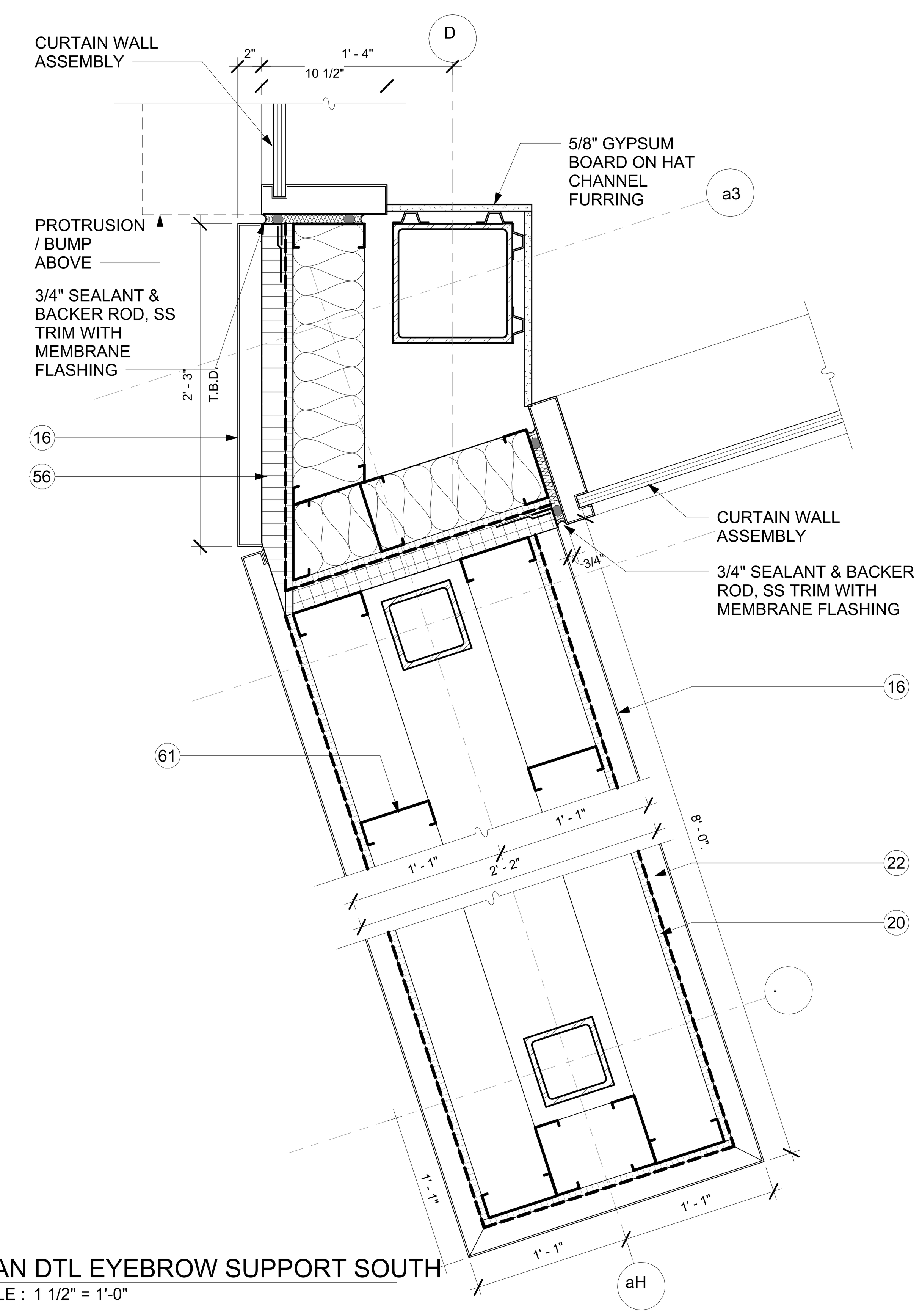

5 A503 PLAN DTL EYEBROW SUPPORT SOUTH
SCALE : 1 1/2" = 1'-0"

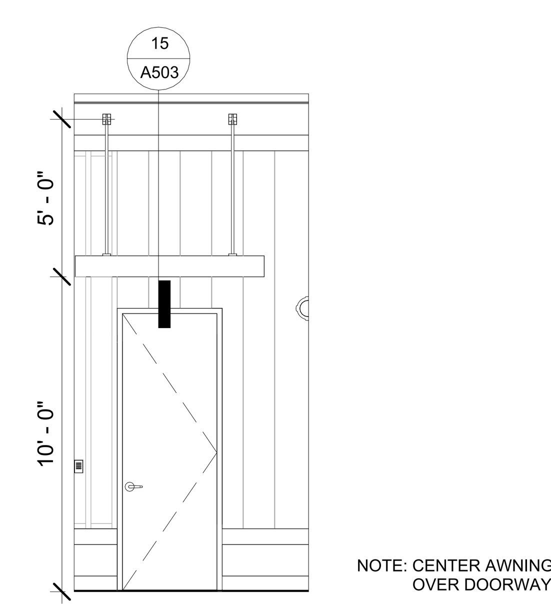

1 A503 AWNING CANOPY ELEVATION
SCALE : 1/4" = 1'-0"

KEY NOTES

1 METAL PANEL BAND.
2 EYEBROW CANOPY.
3 METAL BAND AT PARAPET.
4 METAL PANEL COPING.
5 PERFORATED METAL PANEL.
6 CONCRETE FILLED METAL PAN STAIRS.
7 HDG RAILING.
8 PAINTED STEEL HANDRAIL.
9 PERFORATED STAINLESS STEEL GUARDRAIL INFILL PANEL.
10 GLASS GUARDRAIL SYSTEM.
11 ALUMINUM CURTAINWALL SYSTEM.
12 INSULATED VISION GLAZING.
13 INSULATED SPANDREL GLAZING.
14 TPO MEMBRANE ROOFING
15 ELEVATOR SHAFT WITH FIRE-RATED ENCLOSURE.
16 METAL PANEL WALL SYSTEM.
17 FEATURE METAL PANEL WALL.
18 THERMAL FIBERGLASS INSULATION.
19 MINERAL WOOL INSULATION.
20 5/8" GYPSUM BOARD SHEATHING.
21 5/8" GYPSUM BOARD.
22 FLUID APPLIED AIR AND WATER RESISTIVE BARRIER.
23 6" METAL STUDS.
24 CONCRETE SLAB ON METAL DECK. RE STRUCTURE.
25 STEEL COLUMN
26 STEEL BEAM
27 CONCRETE FOUNDATION AND SLAB
28 CEILING
29 STEEL ROOF JOIST
30 SUBFRAME TO SUPPORT METAL PANEL SYSTEM.
31 PRESSURE TREATED WOOD BLOCKING.
32 STUD TRACK.
33 EYEBROW CANOPY LIGHT.
34 ROOF COVER SHEATHING.
35 CONTINOUS HORIZONTAL WALL SUPPORT. RE : STRUCTURE.
36 CURTAINWALL SYSTEM
37 Z GIRTS
38 STEEL POST
39 PLYWOOD SHEATHING
40 BACKER ROD AND SEALANT
41 ALUMINUM FLASHING
42 FLASHING MEMBRANE
43 C.F.M.F. BOX BEAM HEADER
44 BENT PLATE AT SLAB EDGE
45 STEEL ANGLE
46 TAPERED INSULATION.
47 SPRAY FOAM INSULATION
48 METAL ROOF PANEL
49 ROOF INSULATION
50 TAPERED ROOF INSULATION
51 2" METAL STUDS
52 EDGE BEAD
53 4" DEEP PERFORATED METAL PANEL SYSTEM
54 TRANSLUCENT ACRYLIC PANEL 1/4" FROSTED WHITE
55 LED FIXTURE
56 2" RIGID INSULATION ON FLUID APPLIED AIR AND WATER RESISTIVE BARRIER ON 5/8" SHEATHING ON 6" COLD FORMED METAL FRAME @ 16" O.C. WITH BATT INSULATION
57 WATERPROOF MEMBRANE ON 3/4" P.T. PLYWOOD ON 'Z' GIRTS ON 2" RIGID INSULATION ON FLUID APPLIED AIR AND WATER RESISTIVE BARRIER ON 5/8" SHEATHING ON 6" COLD FORMED METAL FRAMING @ 16" O.C.
58 WOOD SLATS
59 ALUMINUM COMPOSITE PANEL
60 AIR AND WATER RESISTIVE BARRIER ON 5/8" GYPSUM SHEATHING
61 C.F.M.F. WALL SYSTEM

FSGROUP® ARCHITECTS
16575 Village Drive
Houston Texas 77040
713 344 1752 PH
fsdesignbuild.com

PROJECT NAME

THE STATE OF TEXAS · FORT BEND COUNTY

INFORMATION TECHNOLGY BUILDING
1419 EUGENE HEIMANN CIRCLE
FORT BEND COUNTY . RICHMOND . TEXAS 77469

CONSULTANTS

PROFESSIONAL SEAL

REGISTERED ARCHITECT FAKHRUDDIN 'N' SABIR 22631 STATE OF TEXAS
5/15/2024

ISSUED FOR
ISSUED FOR PROPOSALS AND PERMIT

REVISIONS

No.	DESCRIPTION	DATE

KEY PLAN

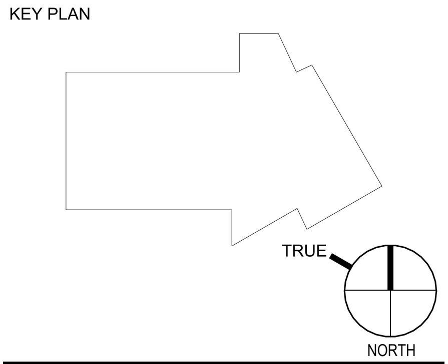

SHEET TITLE
DETAILS

SCALE As indicated
DATE 05/15/2024
PROJECT NUMBER 2319
SHEET NUMBER
A503

FILE PATH: Autodesk Docs://FBC IT Building/FBIT_A23.rvt
PLOT DATE: 5/22/2024 2:18:09 PM

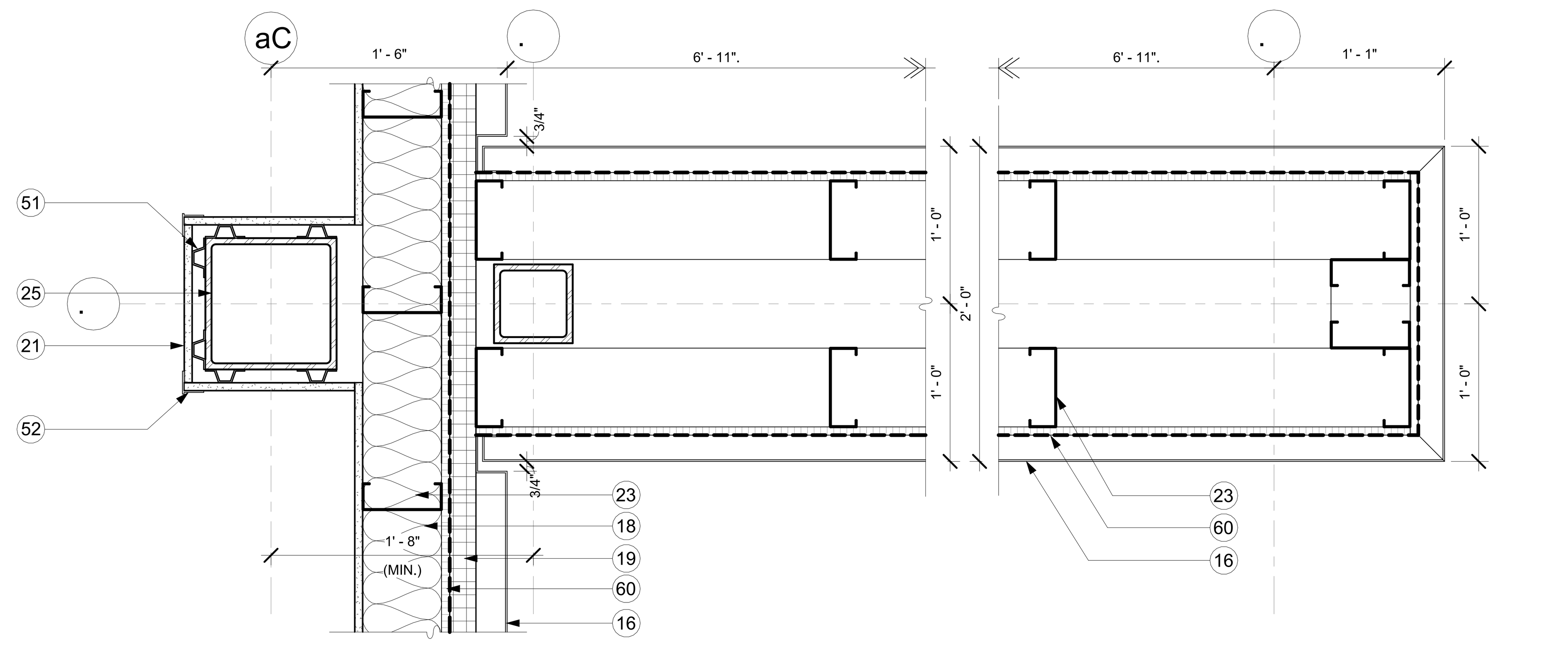

12 A504 PLAN DTL EYEBROW SUPPORT TO BUILDING
SCALE : 1 1/2" = 1'-0"

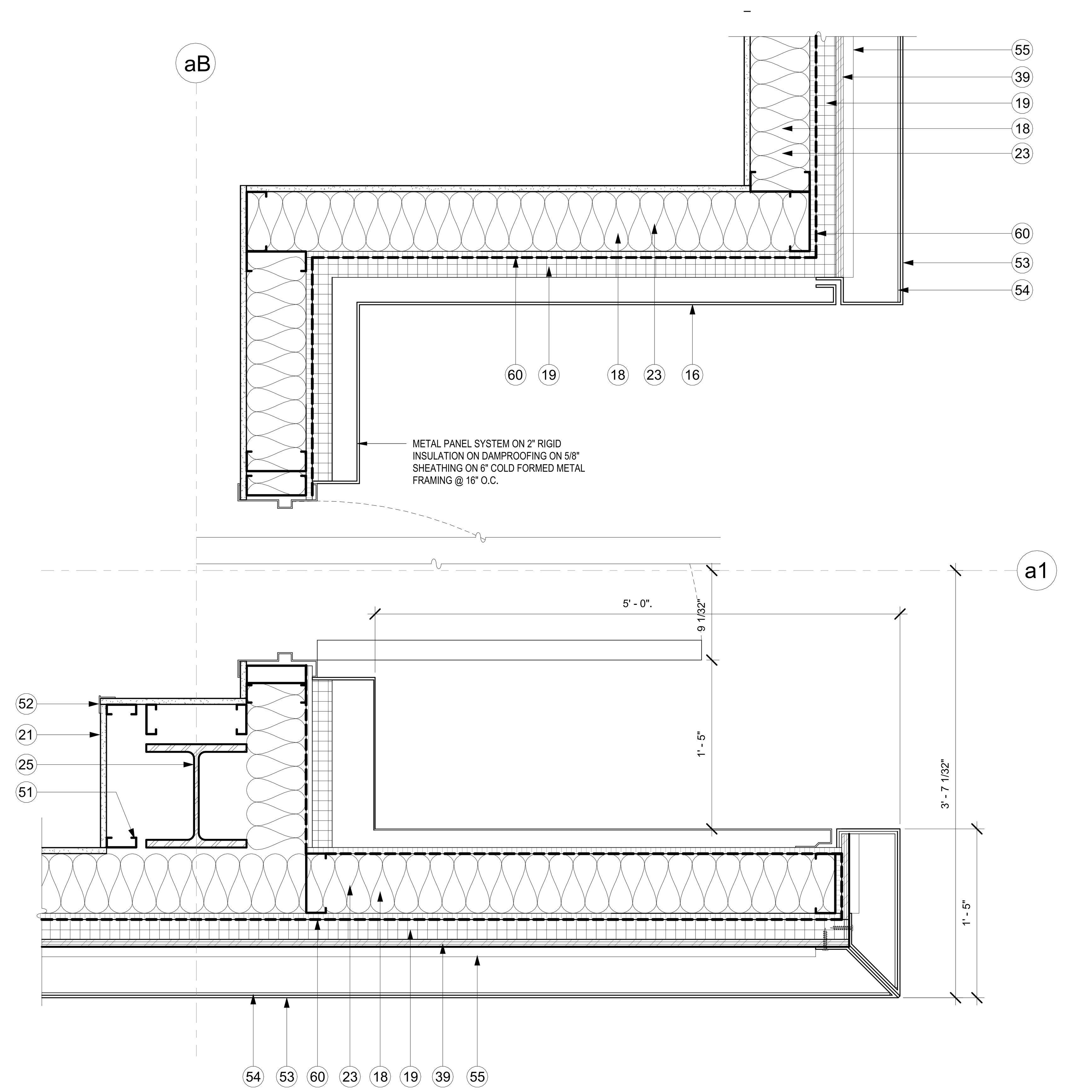

10 A504 PLAN DTL SOUTH ENTRY TRAINING ROOM
SCALE : 1 1/2" = 1'-0"

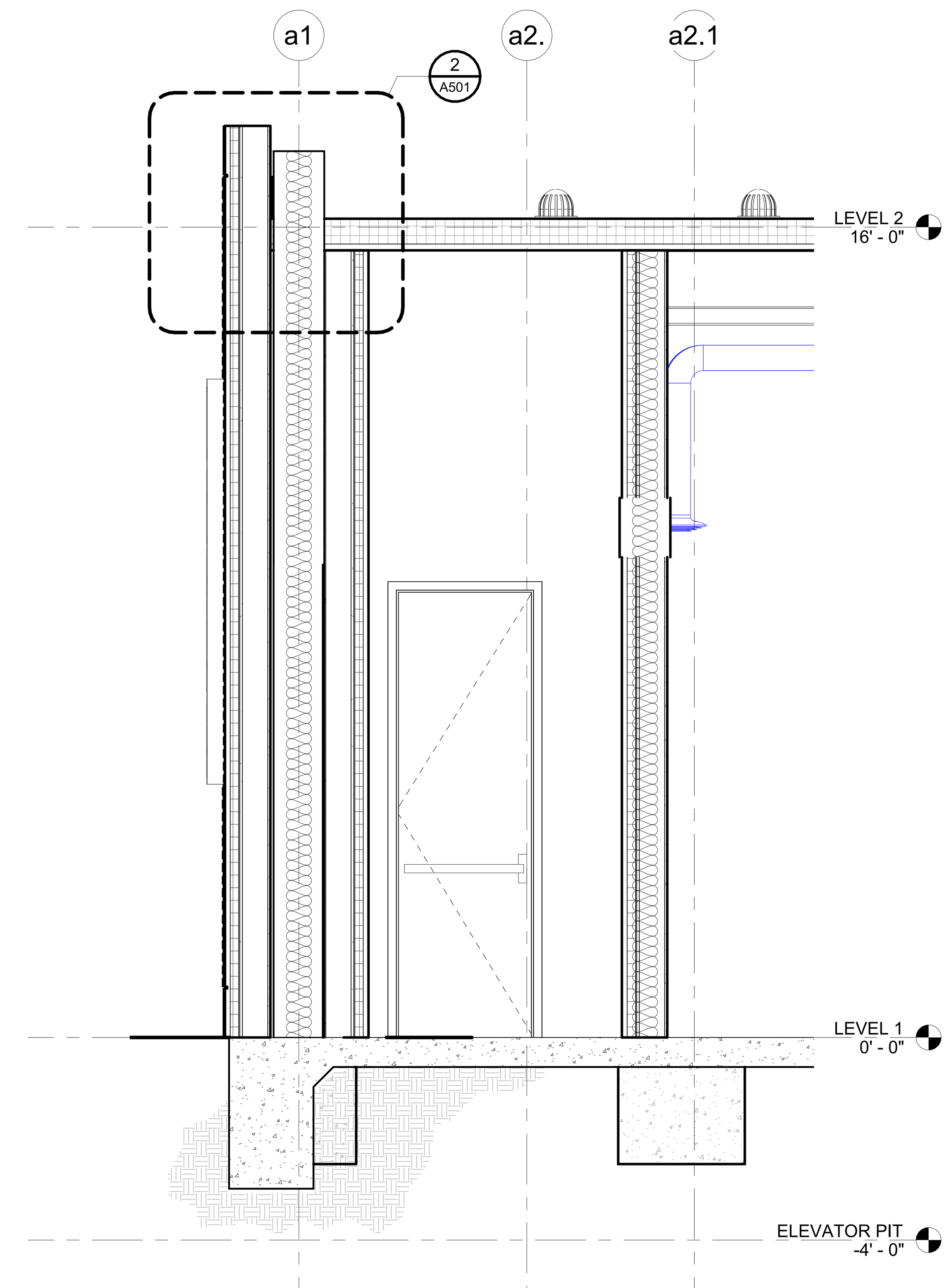

7 A504 TRAINING ROOM EXIT - SECTION DETAIL 1
SCALE : 1/2" = 1'-0"

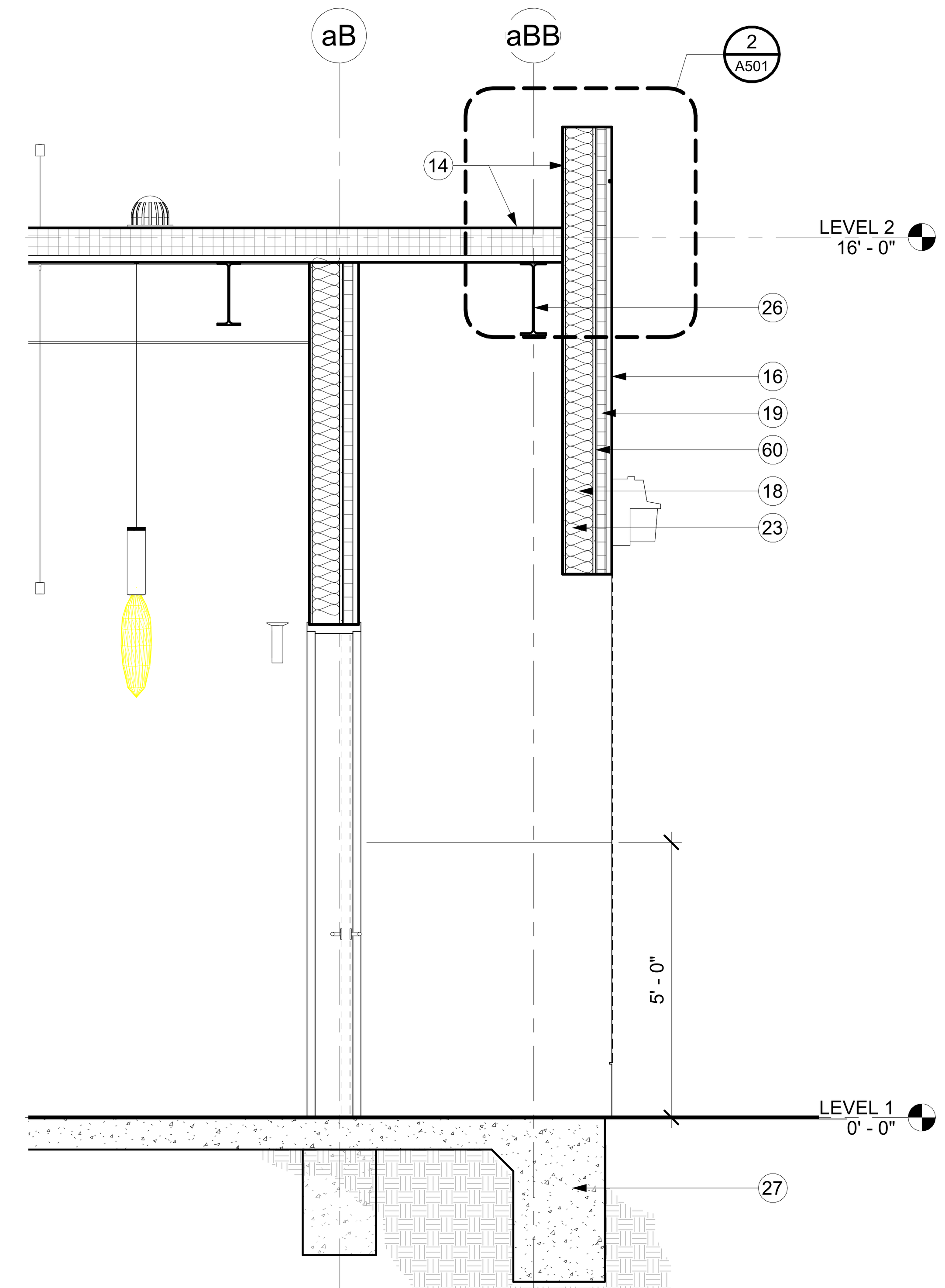

5 A504 TRAINING ROOM EXIT - SECTION DETAIL 2
SCALE : 1/2" = 1'-0"

KEY NOTES

1 METAL PANEL BAND.
2 EYEBROW CANOPY.
3 METAL BAND AT PARAPET.
4 METAL PANEL COPING.
5 PERFORATED METAL PANEL.
6 CONCRETE FILLED METAL PAN STAIRS.
7 HDG RAILING.
8 PAINTED STEEL HANDRAIL.
9 PERFORATED STAINLESS STEEL GUARDRAIL INFILL PANEL.
10 GLASS GUARDRAIL SYSTEM.
11 ALUMINUM CURTAINWALL SYSTEM.
12 INSULATED VISION GLAZING.
13 INSULATED SPANDREL GLAZING.
14 TPO MEMBRANE ROOFING
15 ELEVATOR SHAFT WITH FIRE-RATED ENCLOSURE.
16 METAL PANEL WALL SYSTEM.
17 FEATURE METAL PANEL WALL.
18 THERMAL FIBERGLASS INSULATION.
19 MINERAL WOOL INSULATION.
20 5/8" GYPSUM BOARD SHEATHING.
21 5/8" GYPSUM BOARD.
22 FLUID APPLIED AIR AND WATER RESISTIVE BARRIER.
23 6" METAL STUDS.
24 CONCRETE SLAB ON METAL DECK. RE STRUCTURE.
25 STEEL COLUMN
26 STEEL BEAM
27 CONCRETE FOUNDATION AND SLAB
28 CEILING
29 STEEL ROOF JOIST
30 SUBFRAME TO SUPPORT METAL PANEL SYSTEM.
31 PRESSURE TREATED WOOD BLOCKING.
32 STUD TRACK.
33 EYEBROW CANOPY LIGHT.
34 ROOF COVER SHEATHING.
35 CONTINOUS HORIZONTAL WALL SUPPORT. RE : STRUCTURE.
36 CURTAINWALL SYSTEM
37 Z GIRTS
38 STEEL POST
39 PLYWOOD SHEATHING
40 BACKER ROD AND SEALANT
41 ALUMINUM FLASHING
42 FLASHING MEMBRANE
43 C.F.M.F. BOX BEAM HEADER
44 BENT PLATE AT SLAB EDGE
45 STEEL ANGLE
46 TAPERED INSULATION.
47 SPRAY FOAM INSULATION
48 METAL ROOF PANEL
49 ROOF INSULATION
50 TAPERED ROOF INSULATION
51 2" METAL STUDS
52 EDGE BEAD
53 4" DEEP PERFORATED METAL PANEL SYSTEM
54 TRANSLUCENT ACRYLIC PANEL 1/4" FROSTED WHITE
55 LED FIXTURE
56 2" RIGID INSULATION ON FLUID APPLIED AIR AND WATER RESISTIVE BARRIER ON 5/8" SHEATHING ON 6" COLD FORMED METAL FRAME @ 16" O.C. WITH BATT INSULATION
57 WATERPROOF MEMBRANE ON 3/4" P.T. PLYWOOD ON 'Z' GIRTS ON 2" RIGID INSULATION ON FLUID APPLIED AIR AND WATER RESISTIVE BARRIER ON 5/8" SHEATHING ON 6" COLD FORMED METAL FRAMING @ 16" O.C.
58 WOOD SLATS
59 ALUMINUM COMPOSITE PANEL
60 AIR AND WATER RESISTIVE BARRIER ON 5/8" GYPSUM SHEATHING
61 C.F.M.F. WALL SYSTEM

FSGROUP® ARCHITECTS
16575 Village Drive
Houston Texas 77040
713 344 1752 PH
fsdesignbuild.com

PROJECT NAME

THE STATE OF TEXAS · FORT BEND COUNTY

INFORMATION TECHNOLGY BUILDING
1419 EUGENE HEIMANN CIRCLE
FORT BEND COUNTY . RICHMOND . TEXAS 77469

CONSULTANTS

PROFESSIONAL SEAL

REGISTERED ARCHITECT · FAKHRUDDIN 'N' SABIR · 22531 · STATE OF TEXAS
5/15/2024

ISSUED FOR
ISSUED FOR PROPOSALS AND PERMIT

REVISIONS

No.	DESCRIPTION	DATE

KEY PLAN

TRUE NORTH

SHEET TITLE
DETAILS

SCALE As indicated
DATE 05/15/2024
PROJECT NUMBER 2319
SHEET NUMBER
A504

FILE PATH: Autodesk Docs://FBC IT Building/FBIT_A23.rvt
PLOT DATE: 5/21/2024 5:12:10 PM

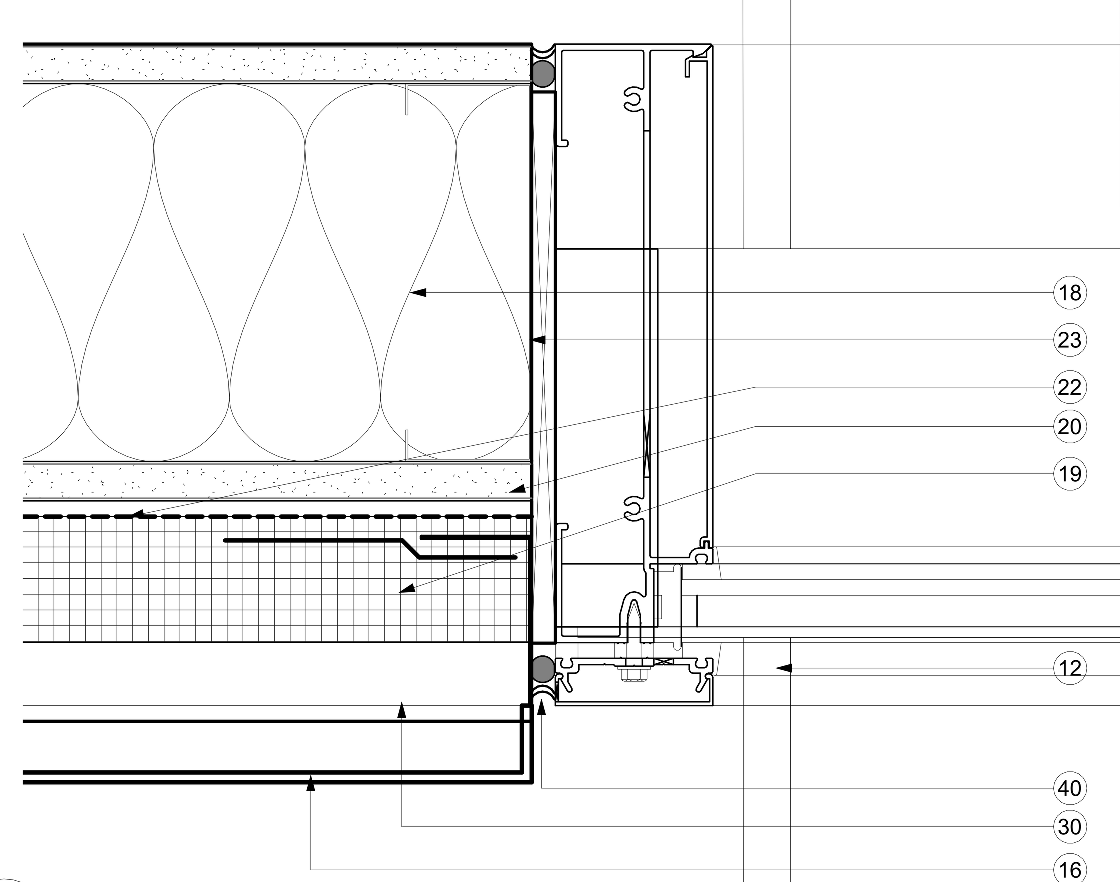

12 A510 WINDOW JAMB AT METAL PANEL
SCALE : 6" = 1'-0"

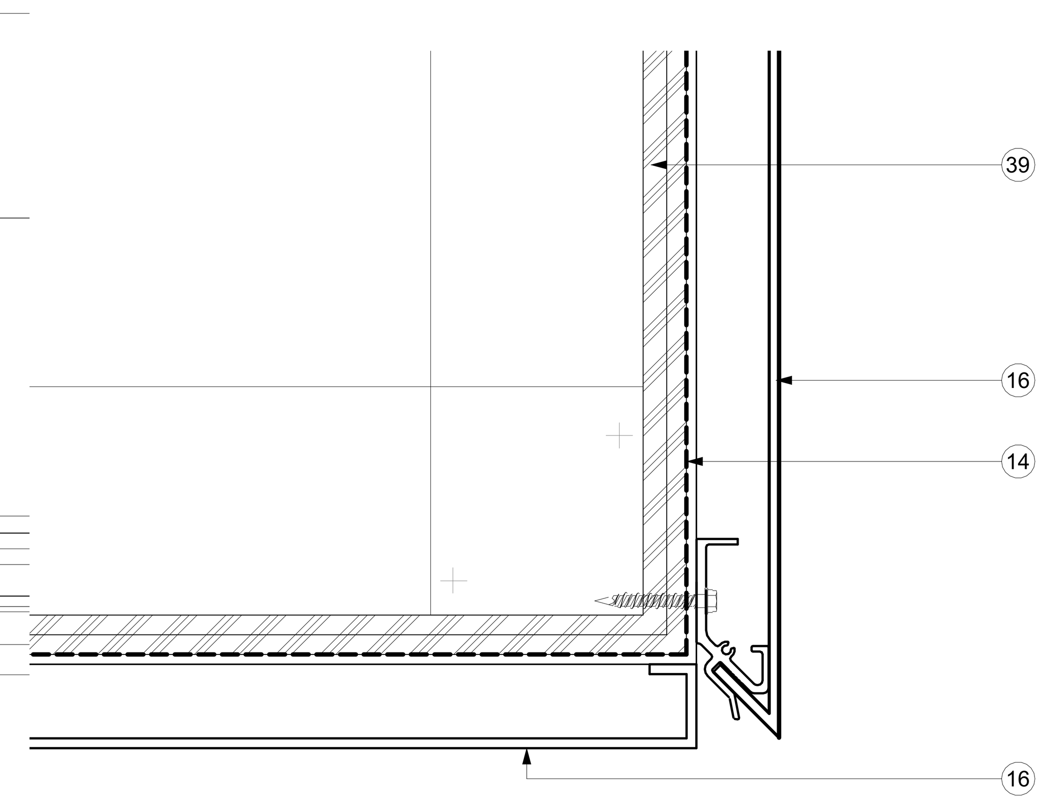

8 A510 METAL PANEL AT UPPER BAND
SCALE : 6" = 1'-0"

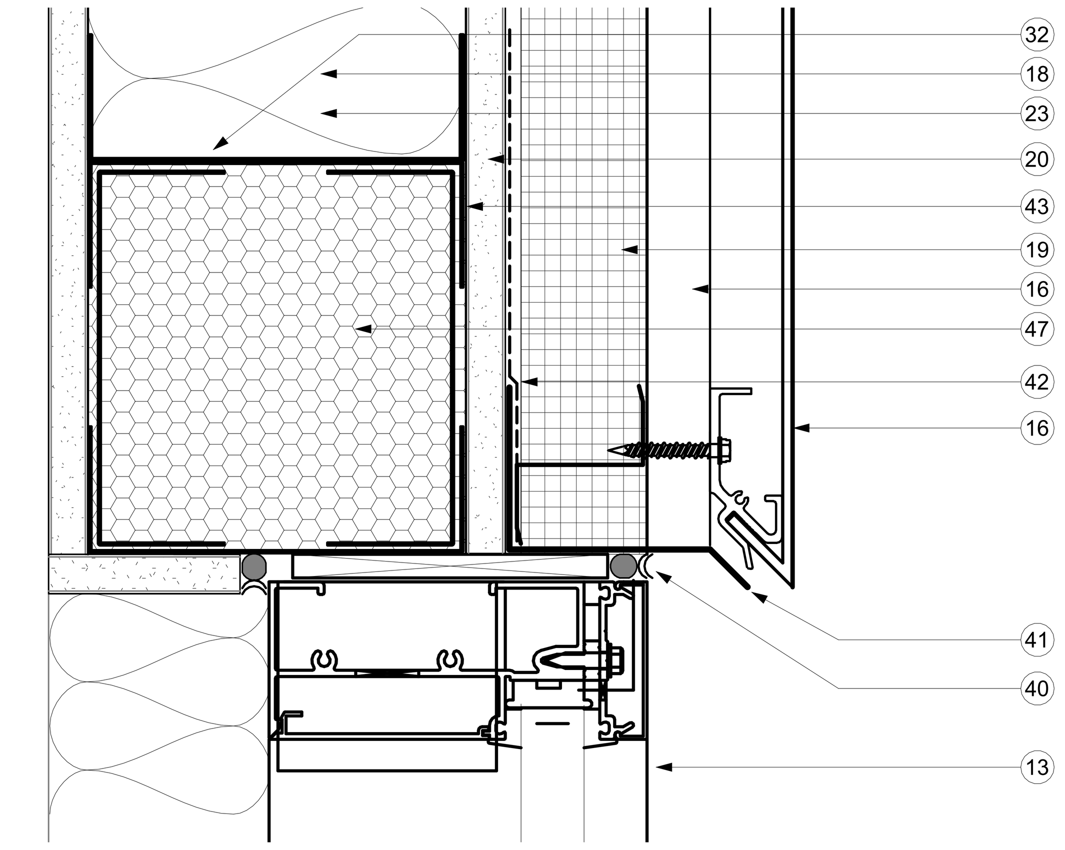

4 A510 HEAD DETAIL AT METAL PANEL
SCALE : 6" = 1'-0"

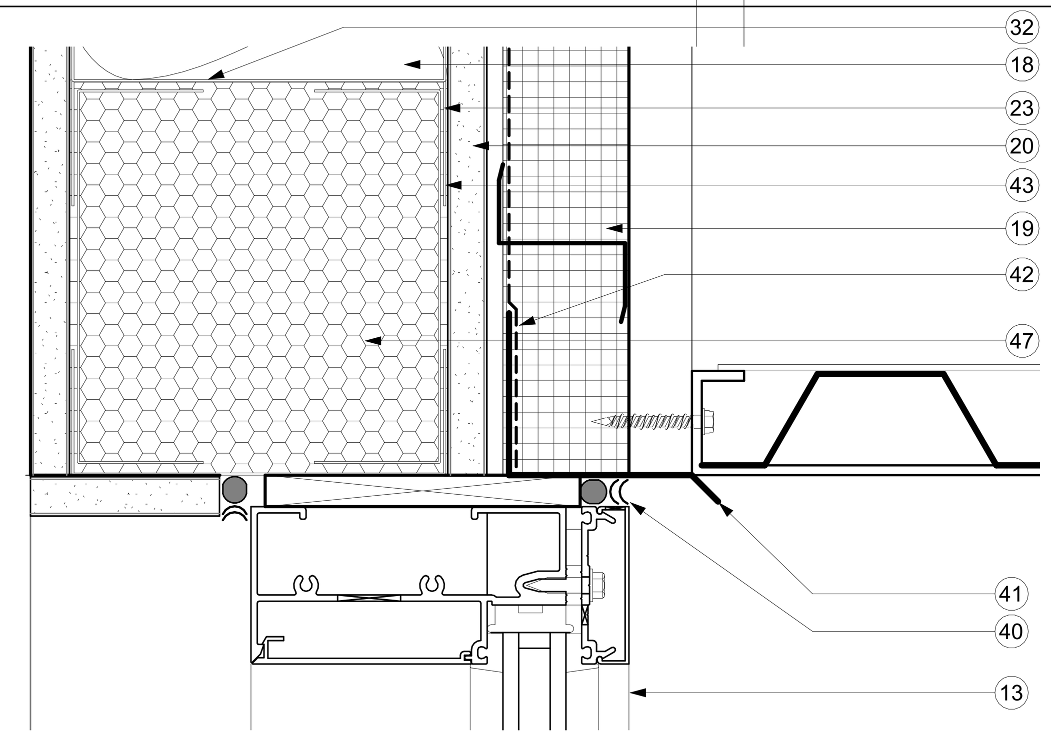

11 A510 HEAD DETAIL AT HORIZONTAL METAL PANEL
SCALE : 6" = 1'-0"

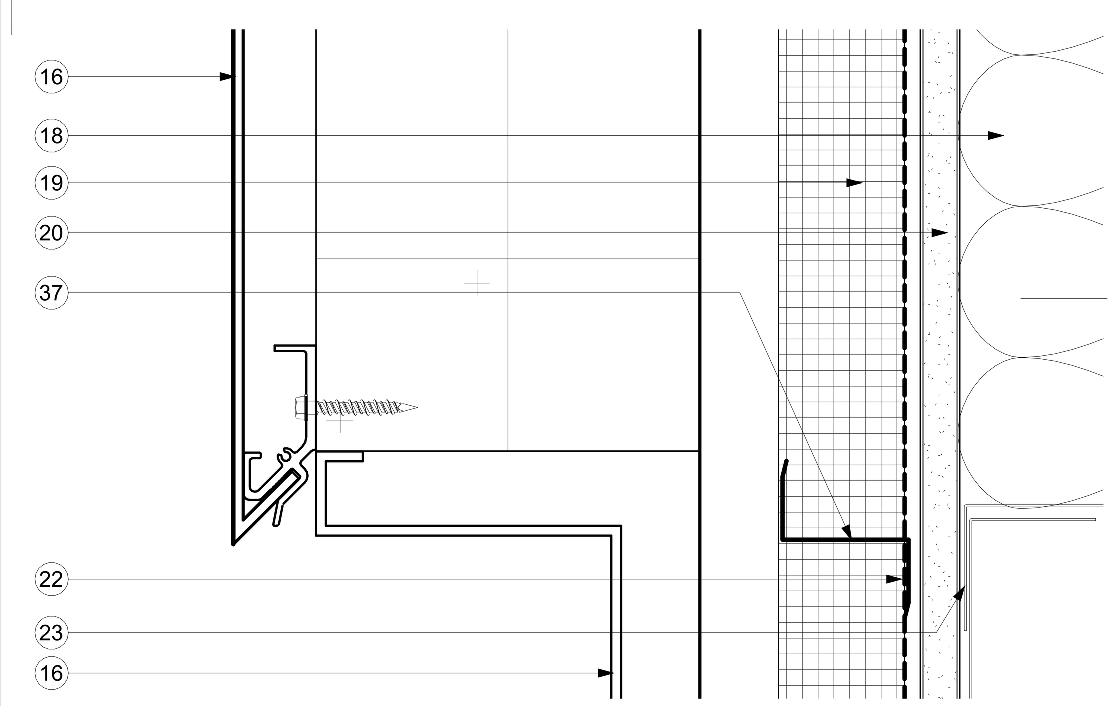

7 A510 METAL PANEL AT LOWER BAND
SCALE : 6" = 1'-0"

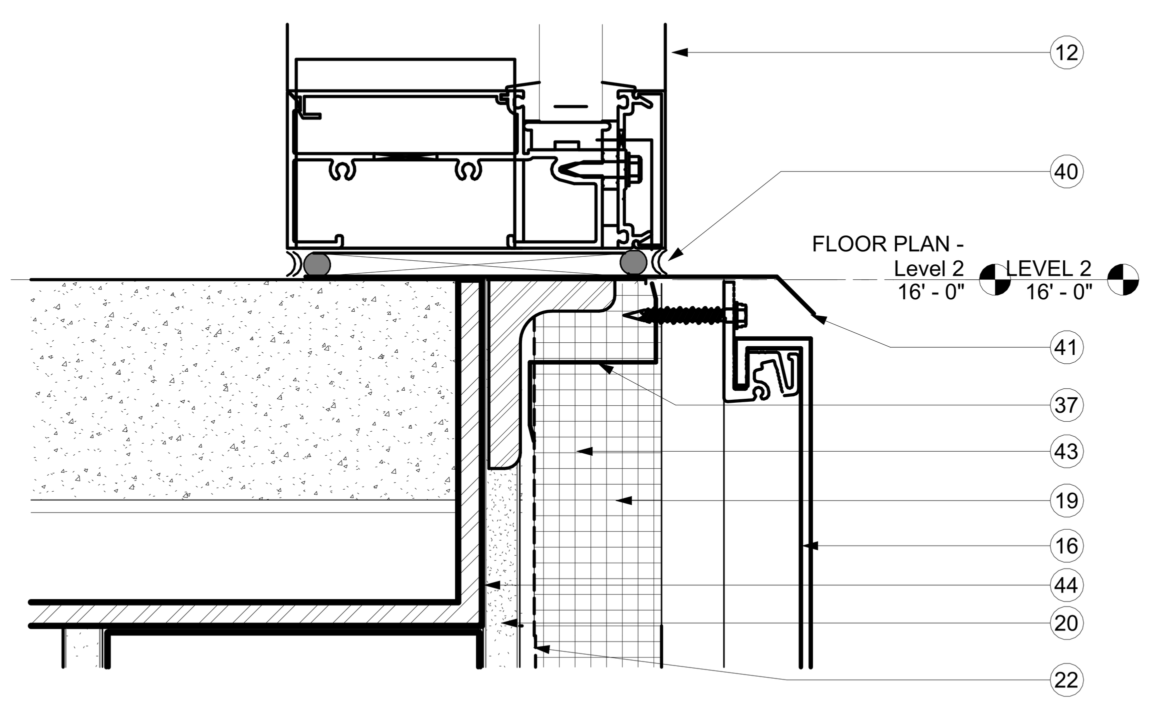

3 A510 SLAB EDGE DETAIL AT METAL PANEL
SCALE : 6" = 1'-0"

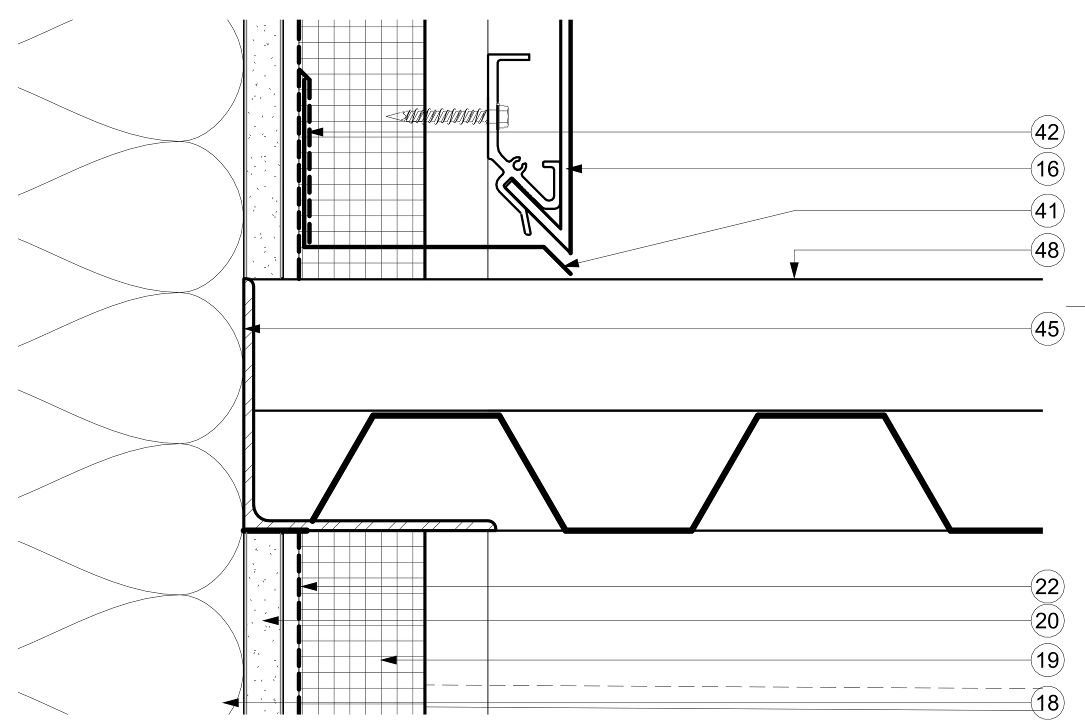

10 A510 METAL PANEL JOINT AT CANOPY
SCALE : 6" = 1'-0"

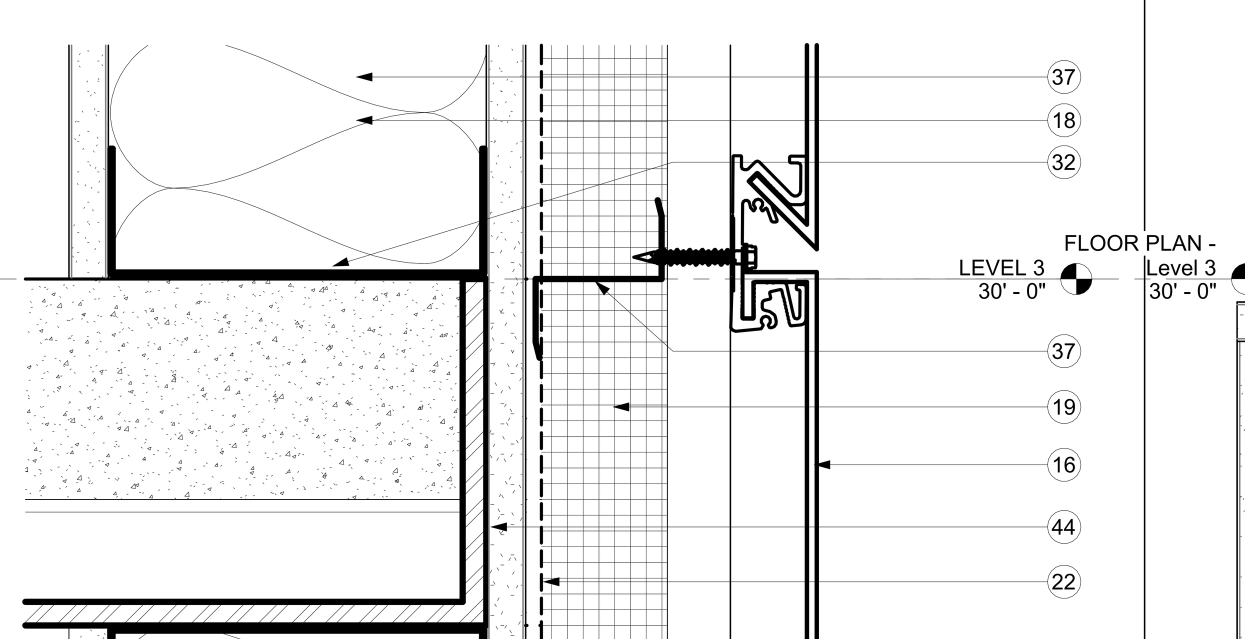

6 A510 METAL PANEL JOINT AT FLOOR
SCALE : 6" = 1'-0"

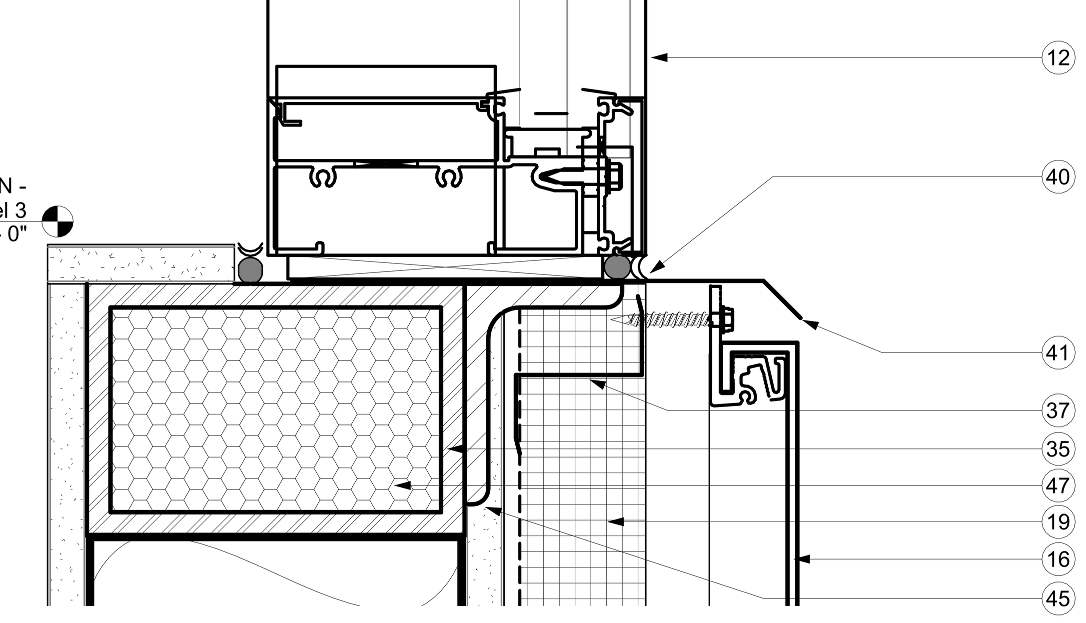

2 A510 SILL DETAIL AT METAL PANEL
SCALE : 6" = 1'-0"

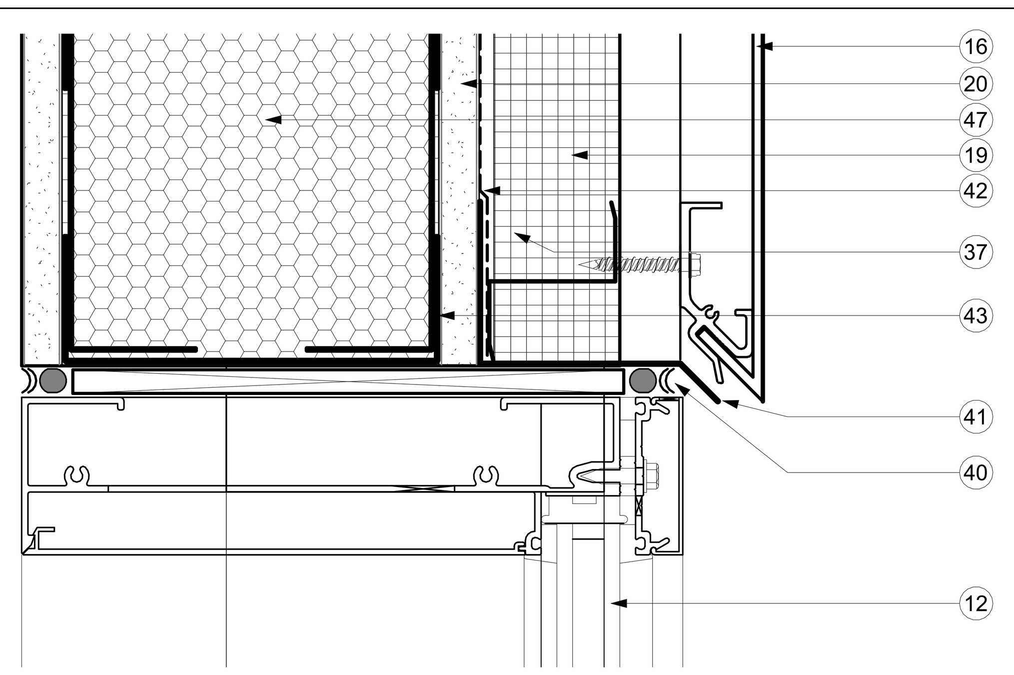

9 A510 CURTAIN WALL HEAD AT METAL PANEL
SCALE : 6" = 1'-0"

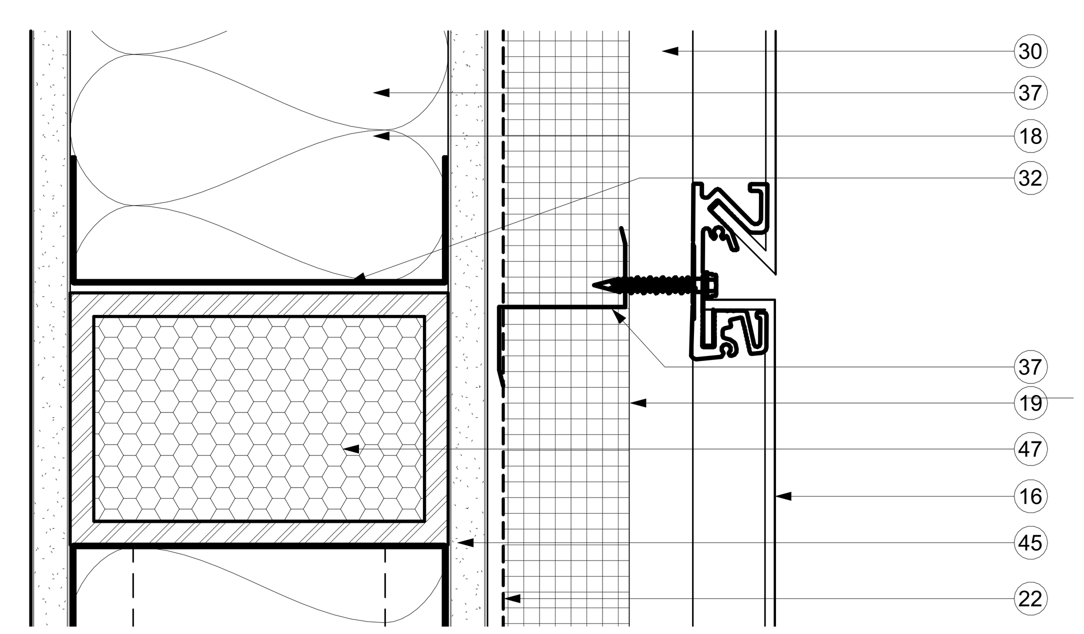

5 A510 METAL PANEL JOINT DETAIL
SCALE : 6" = 1'-0"

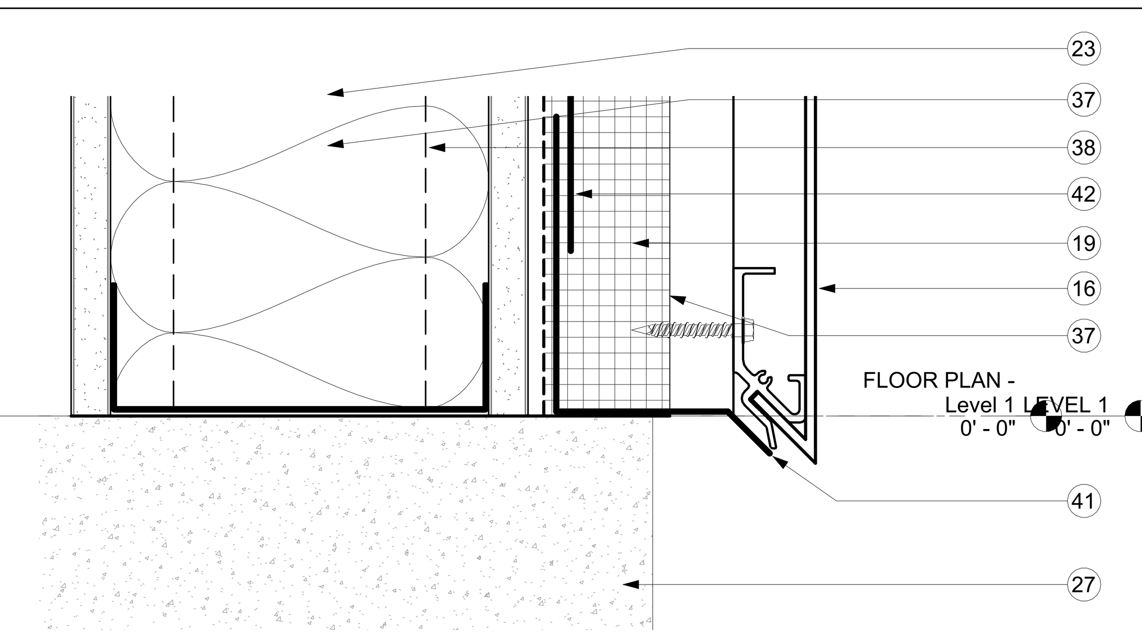

1 A510 BASE DETAIL AT METAL PANEL
SCALE : 6" = 1'-0"

KEY NOTES

1 METAL PANEL BAND.
2 EYEBROW CANOPY.
3 METAL BAND AT PARAPET.
4 METAL PANEL COPING.
5 PERFORATED METAL PANEL.
6 CONCRETE FILLED METAL PAN STAIRS.
7 HDG RAILING.
8 PAINTED STEEL HANDRAIL.
9 PERFORATED STAINLESS STEEL GUARDRAIL INFILL PANEL.
10 GLASS GUARDRAIL SYSTEM.
11 ALUMINUM CURTAINWALL SYSTEM.
12 INSULATED VISION GLAZING.
13 INSULATED SPANDREL GLAZING.
14 TPO MEMBRANE ROOFING
15 ELEVATOR SHAFT WITH FIRE-RATED ENCLOSURE.
16 METAL PANEL WALL SYSTEM.
17 FEATURE METAL PANEL WALL.
18 THERMAL FIBERGLASS INSULATION.
19 MINERAL WOOL INSULATION.
20 5/8" GYPSUM BOARD SHEATHING.
21 5/8" GYPSUM BOARD.
22 FLUID APPLIED AIR AND WATER RESISTIVE BARRIER.
23 6" METAL STUDS.
24 CONCRETE SLAB ON METAL DECK. RE STRUCTURE.
25 STEEL COLUMN
26 STEEL BEAM
27 CONCRETE FOUNDATION AND SLAB
28 CEILING
29 STEEL ROOF JOIST
30 SUBFRAME TO SUPPORT METAL PANEL SYSTEM.
31 PRESSURE TREATED WOOD BLOCKING.
32 STUD TRACK.
33 EYEBROW CANOPY LIGHT.
34 ROOF COVER SHEATHING.
35 CONTINOUS HORIZONTAL WALL SUPPORT. RE : STRUCTURE.
36 CURTAINWALL SYSTEM
37 Z GIRTS
38 STEEL POST
39 PLYWOOD SHEATHING
40 BACKER ROD AND SEALANT
41 ALUMINUM FLASHING
42 FLASHING MEMBRANE
43 C.F.M.F. BOX BEAM HEADER
44 BENT PLATE AT SLAB EDGE
45 STEEL ANGLE
46 TAPERED INSULATION.
47 SPRAY FOAM INSULATION
48 METAL ROOF PANEL
49 ROOF INSULATION
50 TAPERED ROOF INSULATION
51 2" METAL STUDS
52 EDGE BEAD
53 4" DEEP PERFORATED METAL PANEL SYSTEM
54 TRANSLUCENT ACRYLIC PANEL 1/4" FROSTED WHITE
55 LED FIXTURE
56 2" RIGID INSULATION ON FLUID APPLIED AIR AND WATER RESISTIVE BARRIER ON 5/8" SHEATHING ON 6" COLD FORMED METAL FRAME @ 16" O.C. WITH BATT INSULATION
57 WATERPROOF MEMBRANE ON 3/4" P.T. PLYWOOD ON 'Z' GIRTS ON 2" RIGID INSULATION ON FLUID APPLIED AIR AND WATER RESISTIVE BARRIER ON 5/8" SHEATHING ON 6" COLD FORMED METAL FRAMING @ 16" O.C.
58 WOOD SLATS
59 ALUMINUM COMPOSITE PANEL
60 AIR AND WATER RESISTIVE BARRIER ON 5/8" GYPSUM SHEATHING
61 C.F.M.F. WALL SYSTEM

FSGROUP®
ARCHITECTS
16575 Village Drive
Houston Texas 77040
713 344 1752 PH
fsdesignbuild.com

PROJECT NAME

THE STATE OF TEXAS · FORT BEND COUNTY

INFORMATION TECHNOLGY BUILDING
1419 EUGENE HEIMANN CIRCLE
FORT BEND COUNTY . RICHMOND . TEXAS 77469

CONSULTANTS

PROFESSIONAL SEAL

REGISTERED ARCHITECT FAKHRUDDIN N. SABIR 22631 STATE OF TEXAS
5/15/2024

ISSUED FOR
ISSUED FOR PROPOSALS AND PERMIT

REVISIONS

No.	DESCRIPTION	DATE

KEY PLAN

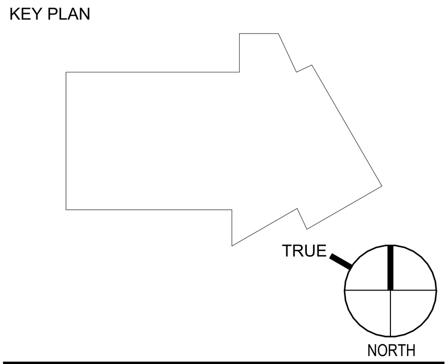

SHEET TITLE
ENLARGED DETAILS

SCALE As indicated
DATE 05/15/2024
PROJECT NUMBER 2319
SHEET NUMBER
A510

FILE PATH: Autodesk Docs://FBC IT Building/FBIT_A23.rvt
PLOT DATE: 5/21/2024 5:12:31 PM

DOOR SCHEDULE LEVEL 1

MARK	ROOM NAME	DOOR TYPE	DOOR LEAF	WIDTH	HEIGHT	THICKNESS	MATERIAL	DOOR FINISH	GLAZING	FRAME TYPE	HARDWARE SET	FIRE RATING	COMMENTS
101A	VESTIBULE (EXTERIOR)	A	PAIR	6' - 0"	8' - 10"		ALUMINUM	PAINT	YES	1A	1	0	
101B	VESTIBULE	A	PAIR	6' - 0"	8' - 10"		ALUMINUM	PAINT	YES	1A	2	0	OPENS TO LOBBY ATRIUM
102A	TRAINING ROOM	B	PAIR	6' - 0"	8' - 10"	0' - 2"	SOLID CORE WOOD	PAINT	NONE	1H	3	1 HR	OPENS TO LOBBY ATRIUM
102B	TRAINING ROOM	B	PAIR	6' - 0"	8' - 10"	0' - 2"	SOLID CORE WOOD	PAINT	NONE	1H	3	1 HR	OPENS TO LOBBY ATRIUM
102C	TRAINING ROOM (EXTERIOR)	DH	SINGLE	2' - 8 1/2"	8' - 10"	0' - 1 3/4"	HOLLOW METAL	PAINT	NONE	1H	4	0	
102D	TRAINING ROOM (EXTERIOR)	DH	SINGLE	2' - 8 1/2"	8' - 10"	0' - 1 3/4"	HOLLOW METAL	PAINT	NONE	1H	4	0	
105	RESTROOM WOMEN	DW	SINGLE	3' - 0"	8' - 10"	0' - 2"	SOLID CORE WOOD	LAMINATE	NONE	1A	SIM 7 (SINGLE)	1 HR	OPENS TO LOBBY ATRIUM
106	RESTROOM MEN	DW	SINGLE	3' - 0"	8' - 10"	0' - 2"	SOLID CORE WOOD	LAMINATE	NONE	1A	SIM 7 (SINGLE)	1 HR	OPENS TO LOBBY ATRIUM
107	MECHANICAL ROOM	B	PAIR	6' - 0"	8' - 10"	0' - 1 3/4"	SOLID CORE WOOD	PAINT	NONE	1A	7	1 HR	OPENS TO LOBBY ATRIUM
111	INVENTORY	B	PAIR	6' - 0"	8' - 10"	0' - 2"	SOLID CORE WOOD	PAINT	NONE	1A	8		
112A	LOADING AREA	B	PAIR	6' - 0"	8' - 10"	0' - 2"	SOLID CORE WOOD	PAINT	NONE	1H	7	1 HR	OPENS TO LOBBY ATRIUM
112B	LOADING AREA (EXTERIOR)	B	PAIR	6' - 0"	8' - 10"	0' - 1 3/4"	HOLLOW METAL	PAINT	NONE	1H	9	0	
120A	BULLPEN	A	PAIR	6' - 0"	8' - 10"	0' - 1 3/4"	ALUMINUM	PAINT	YES	1A	12	1 HR	OPENS TO LOBBY ATRIUM
121	BULLPEN	DH	SINGLE	3' - 0"	8' - 10"	0' - 1 3/4"	HOLLOW METAL	PAINT	NONE	1H		0	
122	OFFICE FA SV2	DW	SINGLE	3' - 0"	8' - 10"	0' - 2"	SOLID CORE WOOD	LAMINATE	NONE	1A	14	0	
123	OFFICE FA SV1	DW	SINGLE	3' - 0"	8' - 10"	0' - 2"	SOLID CORE WOOD	LAMINATE	NONE	1A	14	0	
124	OFFICE FA SV1	DW	SINGLE	3' - 0"	8' - 10"	0' - 2"	SOLID CORE WOOD	LAMINATE	NONE	1A	14	0	
125	OFFICE OP SV2	DW	SINGLE	3' - 0"	8' - 10"	0' - 2"	SOLID CORE WOOD	LAMINATE	NONE	1A	14	0	
126	OFFICE OP SV1	DW	SINGLE	3' - 0"	8' - 10"	0' - 2"	SOLID CORE WOOD	LAMINATE	NONE	1A	14	0	
129A	CONFERENCE RM	DW	SINGLE	3' - 0"	8' - 10"	0' - 2"	SOLID CORE WOOD	LAMINATE	NONE	1A	15	0	
130	GYM	DW	SINGLE	3' - 0"	8' - 10"	0' - 2"	SOLID CORE WOOD	LAMINATE	YES	1A	16	0	
131	RESTROOM & SHOWER	DW	SINGLE	3' - 0"	8' - 10"	0' - 2"	SOLID CORE WOOD	LAMINATE	NONE	1A	36	0	
132	RESTROOM & SHOWER	DW	SINGLE	3' - 0"	8' - 10"	0' - 2"	SOLID CORE WOOD	LAMINATE	NONE	1A	17	0	
133	BUNK ROOM 1	CW	SINGLE	3' - 0"	8' - 10"	0' - 1 3/4"	SOLID CORE WOOD	LAMINATE	YES - FROSTED	1A	17	0	
135	BUNK ROOM 2	CW	SINGLE	3' - 0"	8' - 10"	0' - 1 3/4"	SOLID CORE WOOD	LAMINATE	YES - FROSTED	1A	17	0	
136	FIRE RISER (EXTERIOR)	DH	SINGLE	2' - 8 1/2"	8' - 10"	0' - 1 3/4"	HOLLOW METAL	PAINT	NONE	1H	18	0	
140	TECH BUILD ROOM	A	PAIR	6' - 0"	8' - 10"	0' - 1 3/4"	SOLID CORE WOOD	LAMINATE	YES	1A	20	0	
141	ELECTRICAL ROOM	B	PAIR	6' - 0"	8' - 10"	0' - 2"	SOLID CORE WOOD	PAINT	NONE	1A	21	0	
142	MDM INVENTORY	DW	SINGLE	3' - 0"	8' - 10"	0' - 2"	SOLID CORE WOOD	LAMINATE	NONE	1A	19	0	
143	ELECTRICAL ROOM	B	PAIR	6' - 0"	8' - 10"	0' - 1 3/4"	HOLLOW METAL	PAINT	NONE	1H	22	0	
146	QUIET ROOM	CW	SINGLE	3' - 0"	8' - 10"	0' - 1 3/4"	SOLID CORE WOOD	LAMINATE	YES - FROSTED	1A	17	0	
147	JANITOR	DW	SINGLE	3' - 0"	8' - 10"	0' - 2"	SOLID CORE WOOD	LAMINATE	NONE	1A	35	0	KICK PLATE ON DOOR PUSH SIDE
150A	STAIR 2	DH	SINGLE	3' - 0"	8' - 10"	0' - 1 3/4"	HOLLOW METAL	PAINT	NONE	1H	23	45 MINUTES	
150B	STAIR 2	DH	SINGLE	3' - 0"	8' - 10"	0' - 1 3/4"	HOLLOW METAL	PAINT	NONE	1H	4	0	
160	STAIR 3	B	PAIR	6' - 0"	8' - 10"	0' - 1 3/4"	HOLLOW METAL	PAINT	NONE	1H	10	1 HR	OPENS TO LOBBY ATRIUM

DOOR SCHEDULE LEVEL 2

MARK	ROOM NAME	DOOR TYPE	DOOR LEAF	WIDTH	HEIGHT	THICKNESS	MATERIAL	DOOR FINISH	GLAZING	FRAME TYPE	HARDWARE SET	FIRE RATING	COMMENTS
200	FOYER	A	PAIR	6' - 0"	8' - 10"	0' - 1 3/4"	ALUMINUM	PAINT	YES	1A	24	0	OPENS TO LOBBY ATRIUM
202	FOYER	CW	SINGLE	3' - 0"	8' - 10"	0' - 1 3/4"	ALUMINUM	LAMINATE	YES	1A	11	1 HR	OPENS TO LOBBY ATRIUM
205	RESTROOM WOMEN	CW	SINGLE	3' - 0"	8' - 10"	0' - 1 3/4"	SOLID CORE WOOD	LAMINATE	YES - FROSTED	1A	25	0	
206	RESTROOM MEN	CW	SINGLE	3' - 0"	8' - 10"	0' - 1 3/4"	SOLID CORE WOOD	LAMINATE	YES - FROSTED	1A	25	0	
207	MECHANICAL	B	PAIR	6' - 0"	8' - 10"	0' - 2"	SOLID CORE WOOD	PAINT	NONE	1A	8	0	
208	CYBER / NSOC	CW	SINGLE	3' - 0"	8' - 10"	0' - 2"	SOLID CORE WOOD	LAMINATE	YES	1A	26	0	
209	FORENSIC	CW	SINGLE	3' - 0"	8' - 10"	0' - 1 3/4"	SOLID CORE WOOD	LAMINATE	YES	1A	15	0	
210	OFFICE CS SV1	CW	SINGLE	3' - 0"	8' - 10"	0' - 1 3/4"	SOLID CORE WOOD	LAMINATE	YES	1A	14	0	
211	OFFICE CS M1	CW	SINGLE	3' - 0"	8' - 10"	0' - 1 3/4"	SOLID CORE WOOD	LAMINATE	YES	1A	14	0	
212	DIAGNOSTIC	A	PAIR	6' - 0"	8' - 10"	0' - 2"	SOLID CORE WOOD	LAMINATE	YES	1A	37	1 HR	
221	CONFERENCE ROOM	DW	SINGLE	3' - 0"	8' - 10"	0' - 2"	SOLID CORE WOOD	LAMINATE	NONE	1A	15	0	
222	OFFICE SUPERVISOR	DW	SINGLE	3' - 0"	8' - 10"	0' - 2"	SOLID CORE WOOD	LAMINATE	NONE	1A	14	0	
223	OFFICE INF SV1	DW	SINGLE	3' - 0"	8' - 10"	0' - 2"	SOLID CORE WOOD	LAMINATE	NONE	1A	14	0	
224	OFFICE INF M1	DW	SINGLE	3' - 0"	8' - 10"	0' - 2"	SOLID CORE WOOD	LAMINATE	NONE	1A	14	0	
225	OFFICE OP SV4	DW	SINGLE	3' - 0"	8' - 10"	0' - 2"	SOLID CORE WOOD	LAMINATE	NONE	1A	14	0	
226	OFFICE OP M1	DW	SINGLE	3' - 0"	8' - 10"	0' - 2"	SOLID CORE WOOD	LAMINATE	NONE	1A	14	0	
227	OFFICE SUPERVISOR	DW	SINGLE	3' - 0"	8' - 10"	0' - 2"	SOLID CORE WOOD	LAMINATE	NONE	1A	14	0	
228	OFFICE MANAGER	DW	SINGLE	3' - 0"	8' - 10"	0' - 2"	SOLID CORE WOOD	LAMINATE	NONE	1A	14	0	
229	OFFICE MANAGER	DW	SINGLE	3' - 0"	8' - 10"	0' - 2"	SOLID CORE WOOD	LAMINATE	NONE	1A	14	0	
240	DATA CENTER	B	PAIR	6' - 0"	8' - 10"	0' - 2"	SOLID CORE WOOD	LAMINATE	NONE	1A	27	1 HR	
242	ELECTRICAL ROOM	DH	SINGLE	3' - 0"	8' - 10"	0' - 2"	SOLID CORE WOOD	PAINT	NONE	1H	28	1 HR	OPENS TO LOBBY ATRIUM
246	QUIET ROOM	CW	SINGLE	3' - 0"	8' - 10"	0' - 1 3/4"	SOLID CORE WOOD	LAMINATE	YES - FROSTED	1A	17	0	
247	JANITOR	DW	SINGLE	3' - 0"	8' - 10"	0' - 2"	SOLID CORE WOOD	LAMINATE	NONE	1A	35	0	KICK PLATE ON DOOR PUSH SIDE
250	STAIR 2	DH	SINGLE	3' - 0"	8' - 10"	0' - 1 3/4"	HOLLOW METAL	PAINT	NONE	1H	23	45 MINUTES	
260	STAIR 3	DH	SINGLE	3' - 0"	8' - 10"	0' - 1 3/4"	HOLLOW METAL	PAINT	NONE	1H	4	1 HR	OPENS TO LOBBY ATRIUM
261	CYBER / NSOC	CW	SINGLE	3' - 0"	8' - 10"	0' - 2"	SOLID CORE WOOD	LAMINATE	YES	1A	26	0	

DOOR SCHEDULE LEVEL 3

MARK	ROOM NAME	DOOR TYPE	DOOR LEAF	WIDTH	HEIGHT	THICKNESS	MATERIAL	DOOR FINISH	GLAZING	FRAME TYPE	HARDWARE SET	FIRE RATING	COMMENTS
300A	FOYER	CA	SINGLE	3' - 0"	8' - 10"	0' - 1 3/4"	ALUMINUM	PAINT	YES	1A	29	0	
300B	FOYER	A	PAIR	6' - 0"	8' - 10"	0' - 1 3/4"	ALUMINUM	PAINT	YES	1A	30	0	
300C	FOYER AT STAIR 1	CA	SINGLE	3' - 0"	8' - 10"	0' - 1 3/4"	ALUMINUM	PAINT	YES	1A	SIM 11	1 HR	OPENS TO LOBBY ATRIUM
301A	GIS WORKROOM	A	PAIR	6' - 0"	8' - 10"	0' - 1 3/4"	ALUMINUM	PAINT	YES	1A	31	0	
301B	GIS WORKROOM	CW	SINGLE	3' - 0"	8' - 10"	0' - 1 3/4"	SOLID CORE WOOD	LAMINATE	YES	1A	32	0	
305	RESTROOM WOMEN	CW	SINGLE	3' - 0"	8' - 10"	0' - 1 3/4"	SOLID CORE WOOD	LAMINATE	YES - FROSTED	1A	25	0	
306	RESTROOM MEN	CW	SINGLE	3' - 0"	8' - 10"	0' - 1 3/4"	SOLID CORE WOOD	LAMINATE	YES - FROSTED	1A	25	0	
307	MECHANICAL	B	PAIR	6' - 0"	8' - 10"	0' - 2"	SOLID CORE WOOD	PAINT	NONE	1A	8	0	
308	OFFICE ASST DIRECTOR	DW	SINGLE	3' - 0"	8' - 10"	0' - 2"	SOLID CORE WOOD	LAMINATE	NONE	1A	14	0	
309	TESTING HUDDLE CONFERENCE	DW	SINGLE	3' - 0"	8' - 10"	0' - 2"	SOLID CORE WOOD	LAMINATE	NONE	1A	15	0	
310A	CONFERENCE ROOM	DW	SINGLE	3' - 0"	8' - 10"	0' - 2"	SOLID CORE WOOD	LAMINATE	NONE	1A	26	0	
310B	CONFERENCE ROOM	DW	SINGLE	3' - 0"	8' - 10"	0' - 2"	SOLID CORE WOOD	LAMINATE	NONE	1A	26	0	
311	OFFICE DIRECTOR	CW	SINGLE	3' - 0"	8' - 10"	0' - 1 3/4"	SOLID CORE WOOD	LAMINATE	YES	1A	14	0	
312	TESTING HUDDLE CONFERENCE	CW	PAIR	3' - 0"	8' - 10"	0' - 1 3/4"	SOLID CORE WOOD	LAMINATE	YES	1A	14	0	
313	VIDEO	CW	SINGLE	3' - 0"	8' - 10"	0' - 1 3/4"	SOLID CORE WOOD	LAMINATE	YES	1A	15	0	
320	BULLPEN	A	PAIR	6' - 0"	8' - 10"	0' - 1 3/4"	ALUMINUM	PAINT	YES	1A	24	0	
321	OFFICE APSP SV	DW	SINGLE	3' - 0"	8' - 10"	0' - 2"	SOLID CORE WOOD	LAMINATE	NONE	1A	14	0	
322	OFFICE APSP SV	DW	SINGLE	3' - 0"	8' - 10"	0' - 2"	SOLID CORE WOOD	LAMINATE	NONE	1A	14	0	
323	OFFICE APSP SV	DW	SINGLE	3' - 0"	8' - 10"	0' - 2"	SOLID CORE WOOD	LAMINATE	NONE	1A	14	0	
324	OFFICE APSP SV	DW	SINGLE	3' - 0"	8' - 10"	0' - 2"	SOLID CORE WOOD	LAMINATE	NONE	1A	14	0	
325	OFFICE APSP SV	DW	SINGLE	3' - 0"	8' - 10"	0' - 2"	SOLID CORE WOOD	LAMINATE	NONE	1A	14	0	
326	OFFICE APSP SV	DW	SINGLE	3' - 0"	8' - 10"	0' - 2"	SOLID CORE WOOD	LAMINATE	NONE	1A	14	0	
327	OFFICE AP SP M1	DW	SINGLE	3' - 0"	8' - 10"	0' - 2"	SOLID CORE WOOD	LAMINATE	YES	1A	14	0	
328	OFFICE MO SV	DW	SINGLE	3' - 0"	8' - 10"	0' - 2"	SOLID CORE WOOD	LAMINATE	NONE	1A	14	0	
329	OFFICE PMO TL2	DW	SINGLE	3' - 0"	8' - 10"	0' - 2"	SOLID CORE WOOD	LAMINATE	NONE	1A	14	0	
330	OFFICE PMO TL1	DW	SINGLE	3' - 0"	8' - 10"	0' - 2"	SOLID CORE WOOD	LAMINATE	NONE	1A	14	0	
334	ELECTRICAL ROOM	DW	SINGLE	3' - 0"	8' - 10"	0' - 2"	SOLID CORE WOOD	PAINT	NONE	1A	19	0	
346	QUIET ROOM	CW	SINGLE	3' - 0"	8' - 10"	0' - 1 3/4"	SOLID CORE WOOD	LAMINATE	YES - FROSTED	1A	17	0	
347	JANITOR	DW	SINGLE	3' - 0"	8' - 10"	0' - 2"	SOLID CORE WOOD	LAMINATE	NONE	1A	35	0	KICK PLATE ON DOOR PUSH SIDE
350	STAIR 2	DH	SINGLE	3' - 0"	8' - 10"	0' - 1 3/4"	HOLLOW METAL	PAINT	NONE	1H	23	45 MINUTES	
360	STAIR 3	DH	SINGLE	3' - 0"	8' - 10"	0' - 1 3/4"	HOLLOW METAL	PAINT	NONE	1H	4	1 HR	OPENS TO LOBBY ATRIUM
361	HUDDLE	CW	SINGLE	3' - 0"	8' - 10"	0' - 1 3/4"	SOLID CORE WOOD	LAMINATE	YES - FROSTED	1A	34	0	
362	HUDDLE	CW	SINGLE	3' - 0"	8' - 10"	0' - 1 3/4"	SOLID CORE WOOD	LAMINATE	YES - FROSTED	1A	34	0	
363	HUDDLE	CW	SINGLE	3' - 0"	8' - 10"	0' - 1 3/4"	SOLID CORE WOOD	LAMINATE	YES - FROSTED	1A	34	0	
364	GIS WORKROOM	CW	SINGLE	3' - 0"	8' - 10"	0' - 1 3/4"	SOLID CORE WOOD	LAMINATE	YES	1A	14	0	

GENERAL NOTES: DOOR SCHEDULE

1. ALL INTERIOR DIMENSIONS ARE MEASURED FROM FINISH FACE TO FINISH FACE UNLESS
2. NOTED OTHERWISE. REFER TO THE ANNOTATION SYMBOL LEGEND AT SHEET G0.00 FOR TYPICAL DOOR PLACEMENT ON THE WALL THAT DOES NOT HAVE A DIMENSION PLACEMENT.
3. REFER TO OVERALL FLOOR PLAN FOR DOOR LOCATIONS.
4. FLOOR FINISH CHANGES SHALL OCCUR AT THE CENTERLINE OF DOORS UNLESS NOTED OTHERWISE. FLOOR FINISH CHANGES SHALL HAVE THRESHOLDS OR REDUCERS STRIPS.
5. FOR WINDOW TYPES REFER TO THE WINDOW SCHEDULE.
6. FOR PARTITION TYPES REFER TO WALL PARTITIONS.

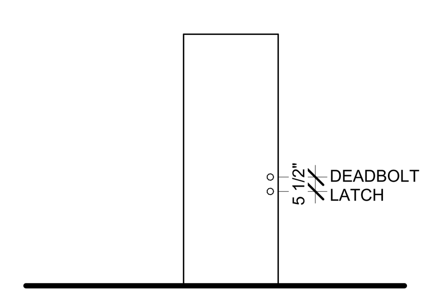

TYPICAL MOUNTING HEIGHT OF DOOR HARDWARE

COORDINATE ALL DOOR HARDWARE w/ DOOR & FRAME MANUFACTURERS

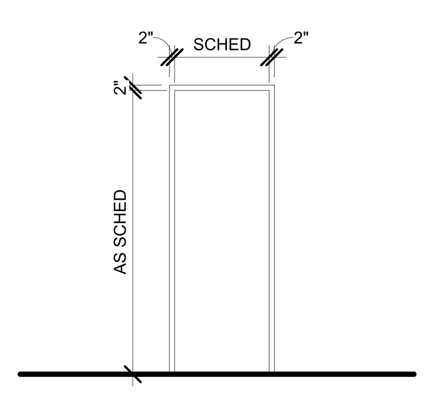

1A ALUMINUM FRAME

1H HOLLOW METAL FRAME

FRAME TYPE

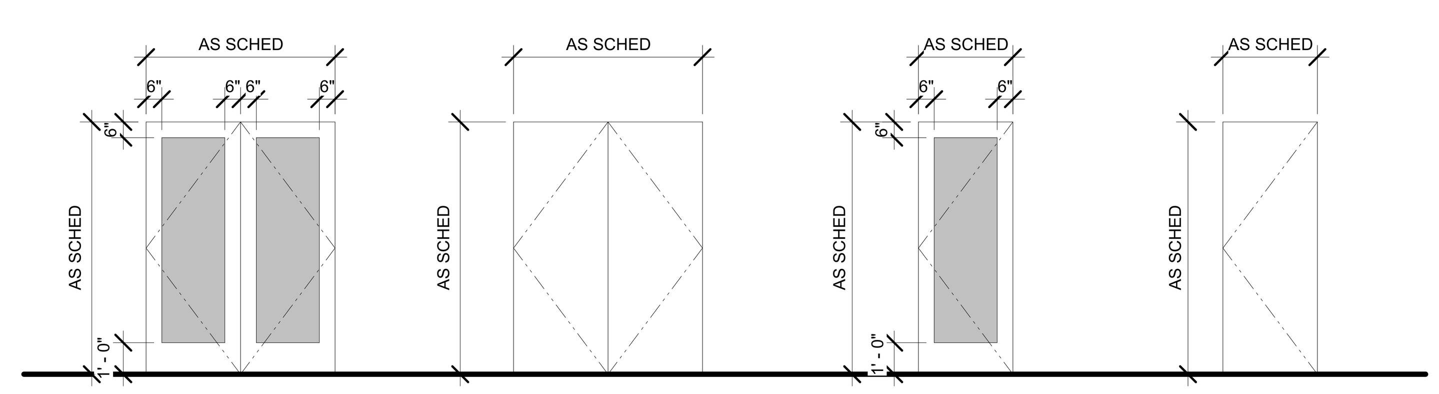

A PAIR DOORS w/ LITE

B PAIR DOORS SOLID

CW SINGLE DOOR w/ LITE WOOD

CA SINGLE DOOR w/ LITE ALUMINUM

DW SOLID PANEL WOOD

DH SOLID PANEL HOLLOW METAL

DOOR TYPES

FSGROUP ARCHITECTS
16575 Village Drive
Houston Texas 77040
713 344 1752 PH
fsdesignbuild.com

PROJECT NAME

INFORMATION TECHNOLGY BUILDING
1419 EUGENE HEIMANN CIRCLE
FORT BEND COUNTY . RICHMOND . TEXAS 77469

CONSULTANTS

PROFESSIONAL SEAL

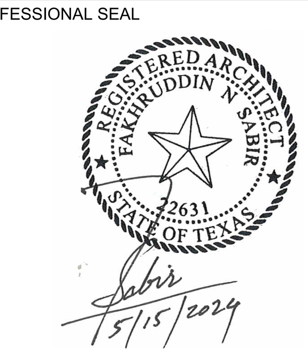

ISSUED FOR

ISSUED FOR PROPOSALS AND PERMIT

REVISIONS

No.	DESCRIPTION	DATE

KEY PLAN

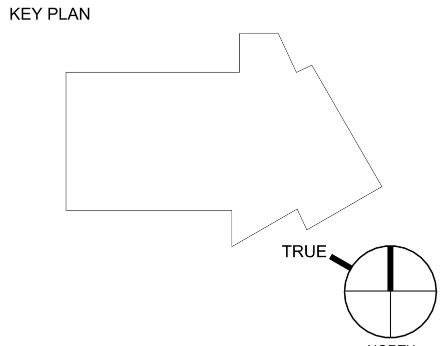

SHEET TITLE

DOOR SCHEDULE

SCALE: As indicated

DATE: 05/15/2024

PROJECT NUMBER: 2319

SHEET NUMBER

A600

FILE PATH: Autodesk Docs://FBC IT Building/FBIT_A23.rvt
PLOT DATE: 5/22/2024 2:56:51 PM

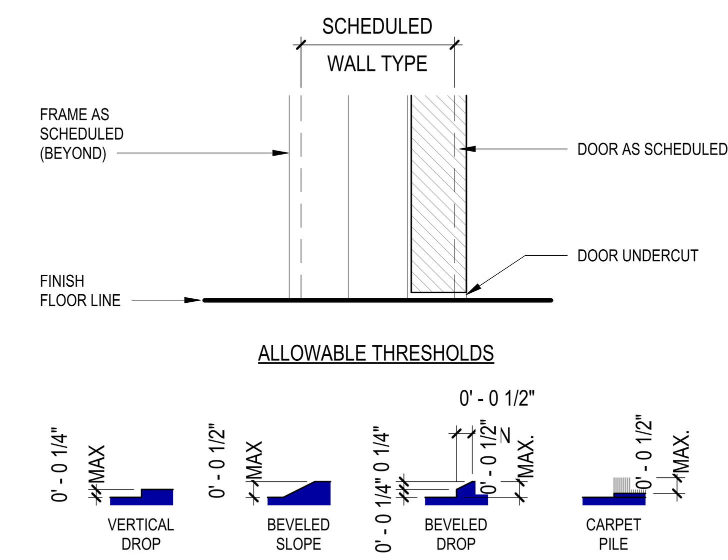

4 A601 TYPICAL INTERIOR SILL DETAILS
SCALE : 3" = 1'-0"

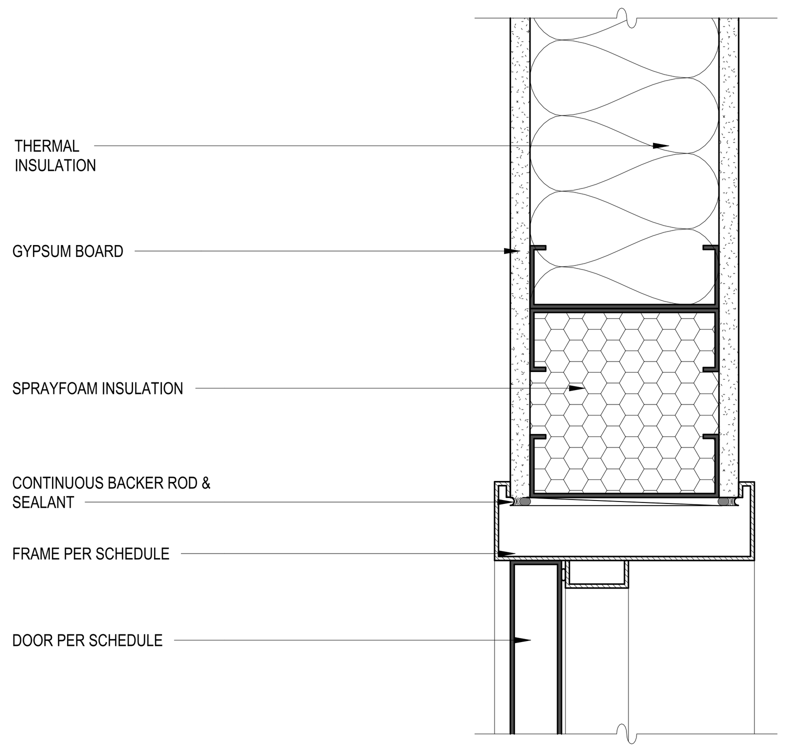

19 A601 HEAD DETAIL- INTERIOR HOLLOW METAL DOOR
SCALE : 3" = 1'-0"

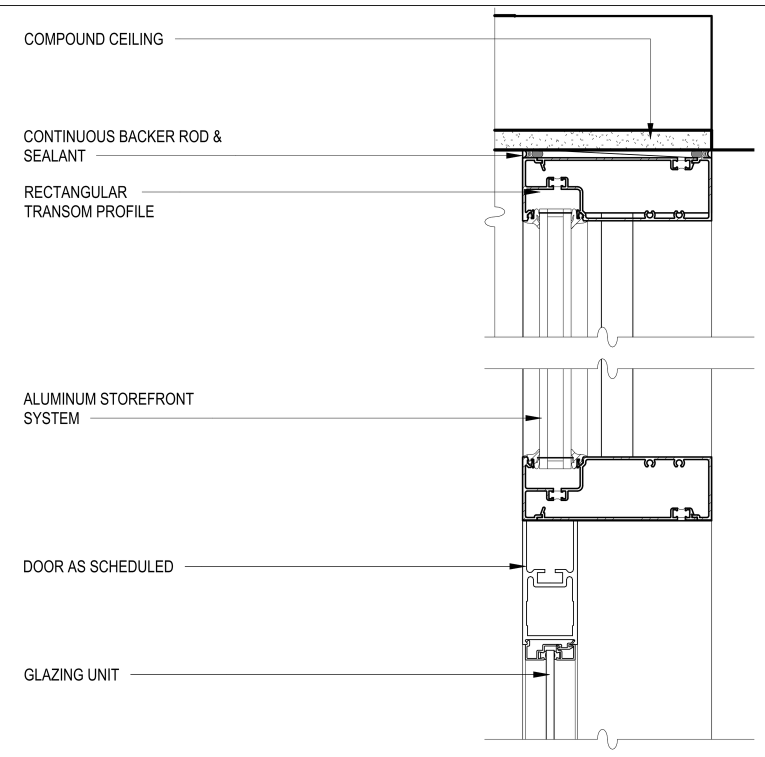

15 A601 HEAD DETAIL- INTERIOR STOREFRONT GLASS DOOR
SCALE : 3" = 1'-0"

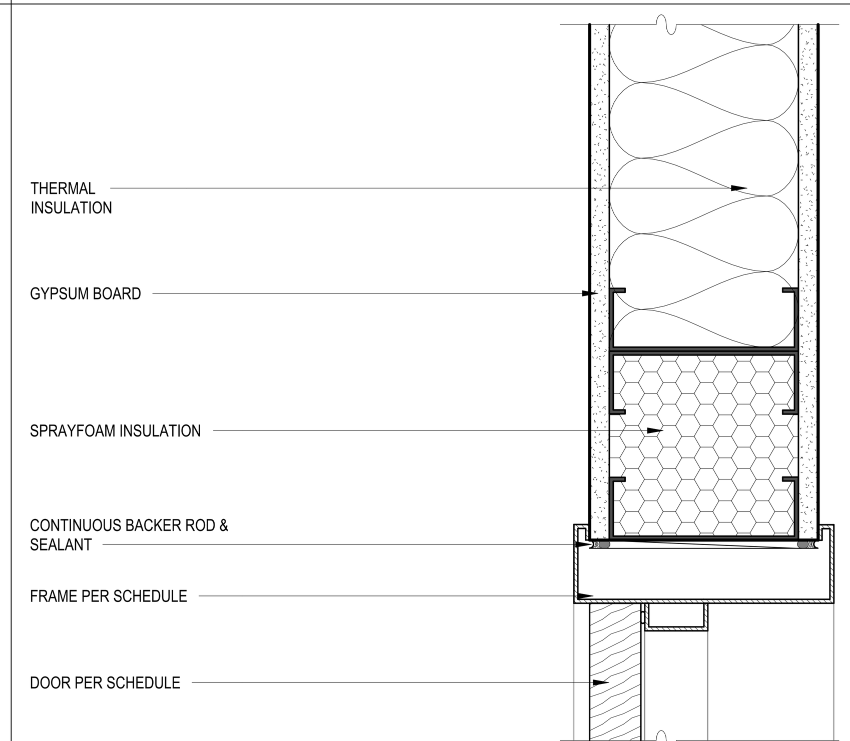

11 A601 HEAD DETAIL- INTERIOR SOLID CORE WOOD DOOR
SCALE : 3" = 1'-0"

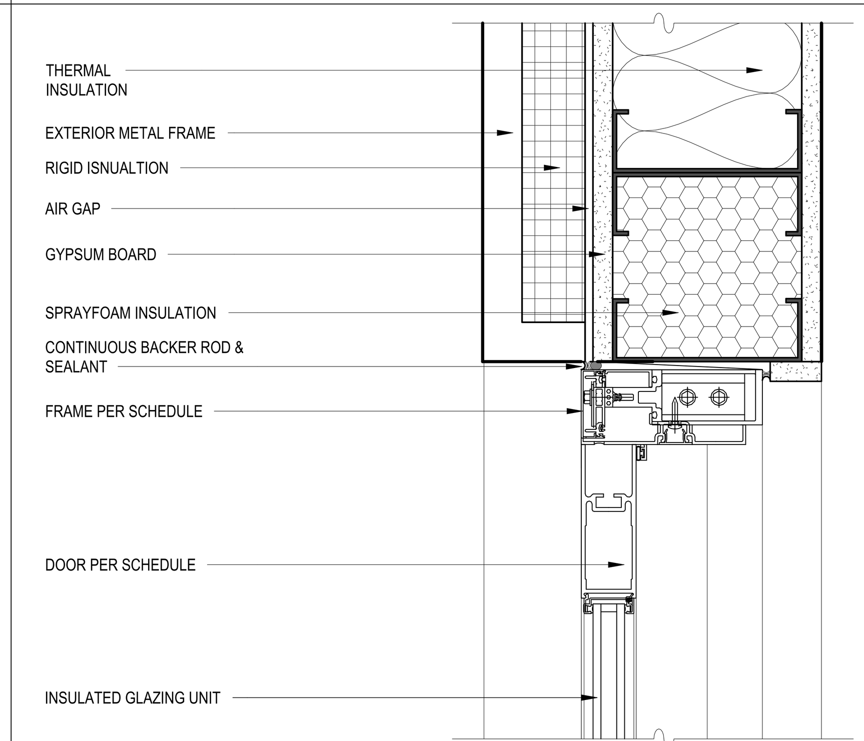

7 A601 HEAD DETAIL- EXTERIOR HOLLOW METAL DOOR FULL LITE
SCALE : 3" = 1'-0"

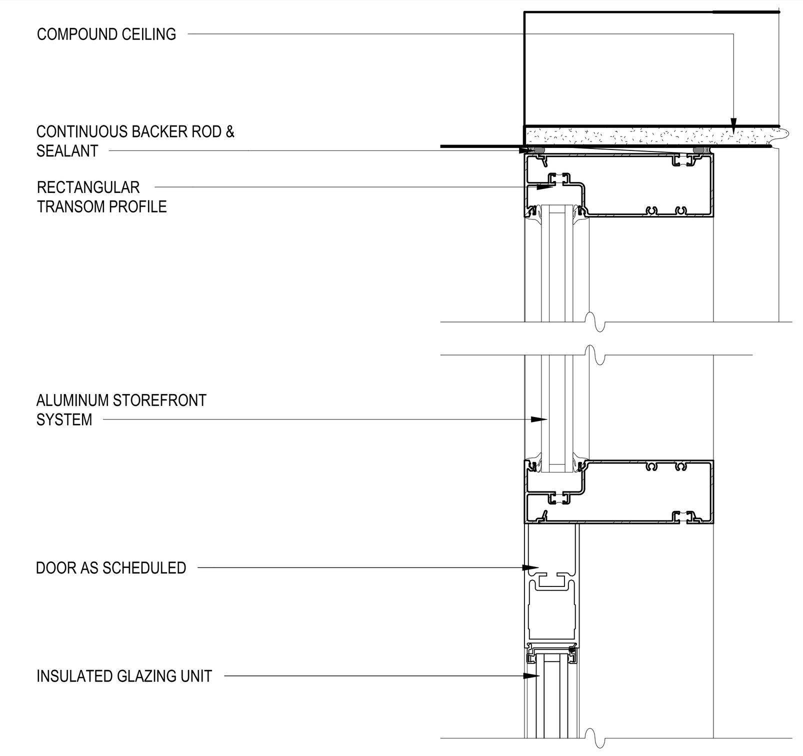

3 A601 HEAD DETAIL- EXTERIOR STOREFRONT GLASS DOOR
SCALE : 3" = 1'-0"

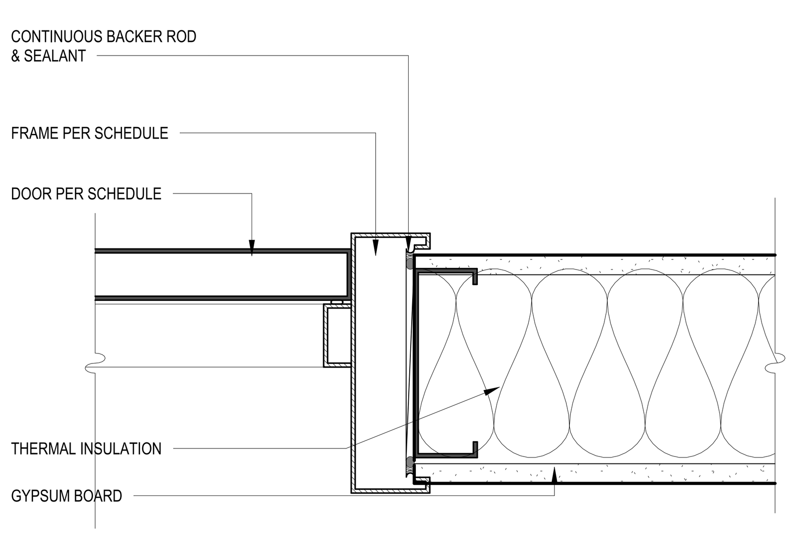

18 A601 JAMB DETAIL- INTERIOR HOLLOW METAL DOOR
SCALE : 3" = 1'-0"

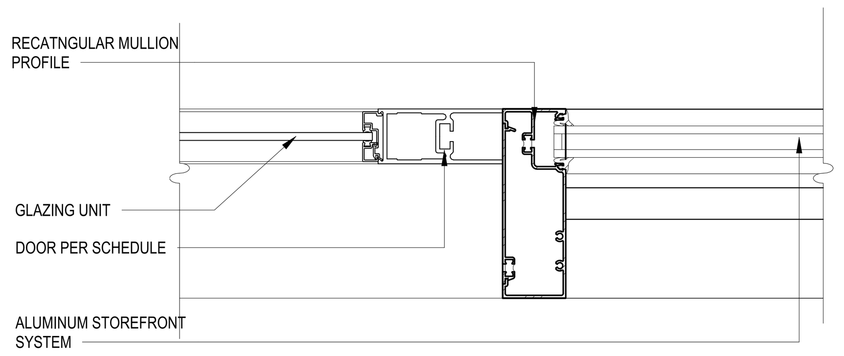

14 A601 JAMB DETAIL- INTERIOR STOREFRONT GLASS DOOR
SCALE : 3" = 1'-0"

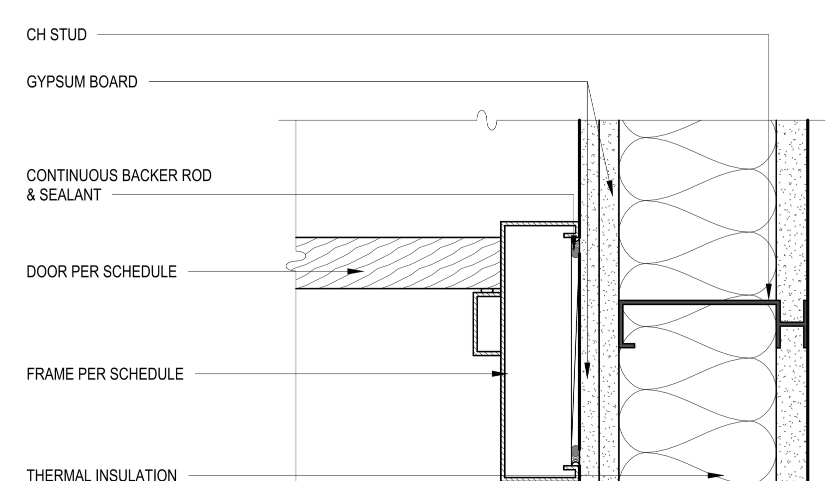

10 A601 JAMB DETAIL- INTERIOR SOLID CORE WOOD DOOR
SCALE : 3" = 1'-0"

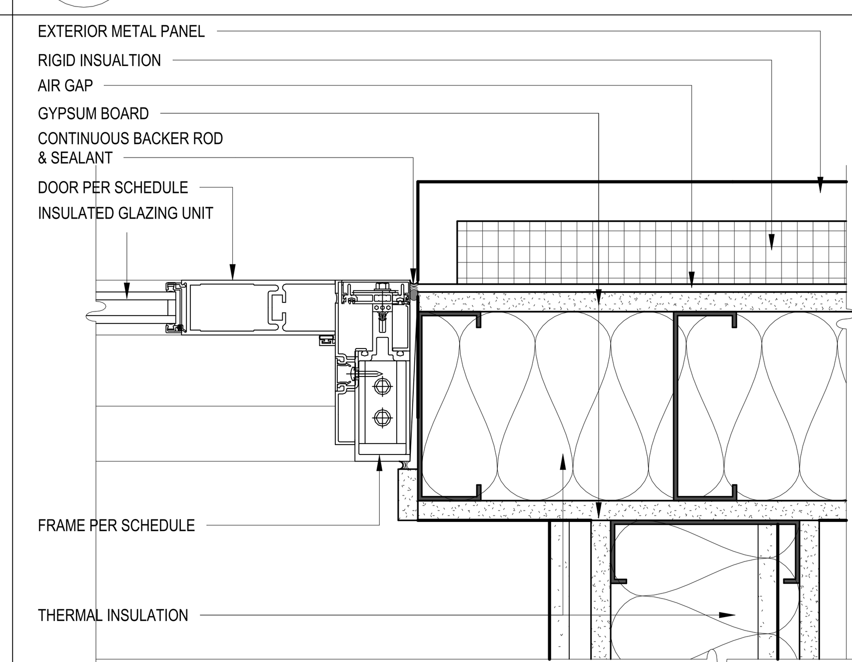

6 A601 JAMB DETAIL- EXTERIOR HOLLOW METAL DOOR FULL LITE
SCALE : 3" = 1'-0"

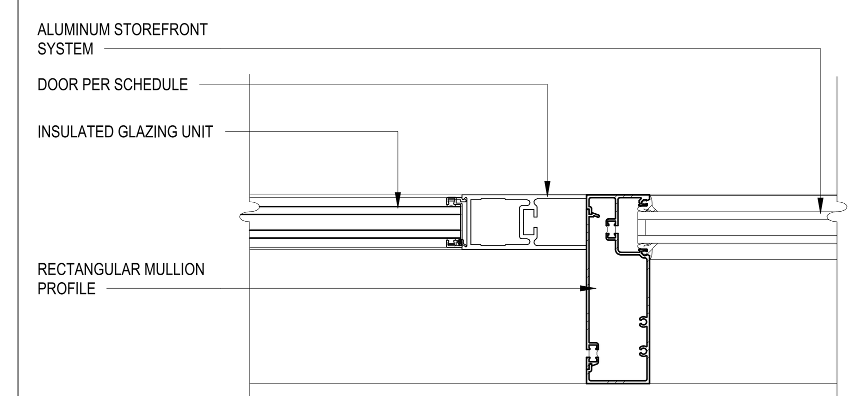

2 A601 JAMB DETAIL- EXTERIOR STOREFRONT GLASS DOOR
SCALE : 3" = 1'-0"

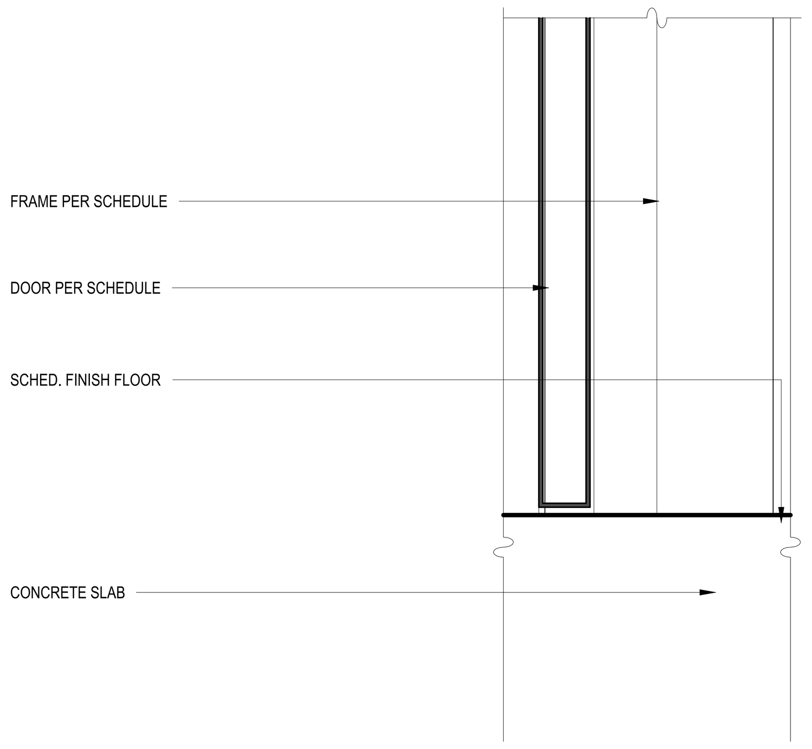

17 A601 SILL DETAIL- INTERIOR HOLLOW METAL DOOR
SCALE : 3" = 1'-0"

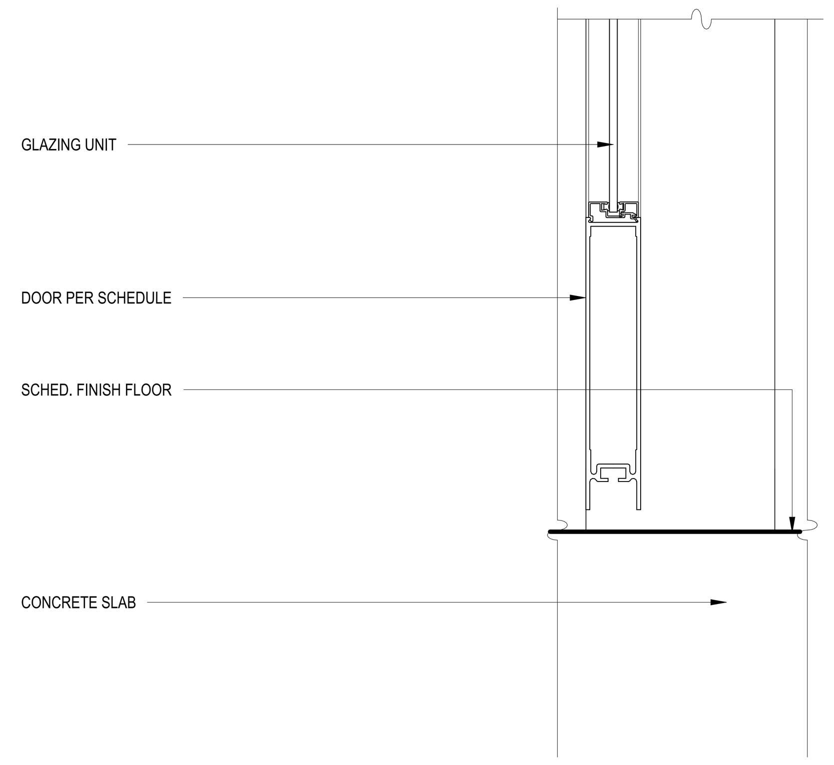

13 A601 SILL DETAIL- INTERIOR STOREFRONT GLASS DOOR
SCALE : 3" = 1'-0"

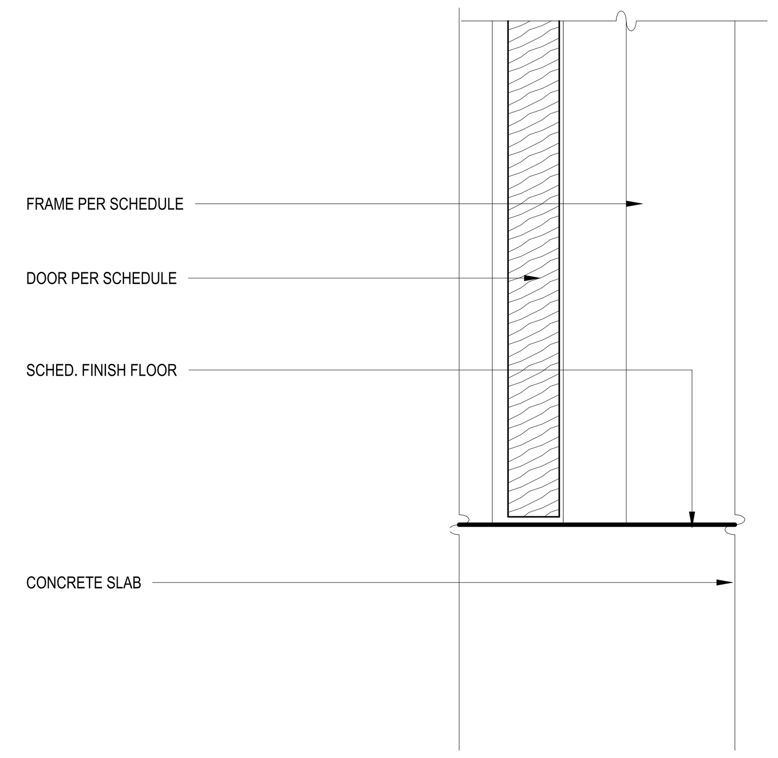

9 A601 SILL DETAIL- INTERIOR SOLID CORE WOOD DOOR
SCALE : 3" = 1'-0"

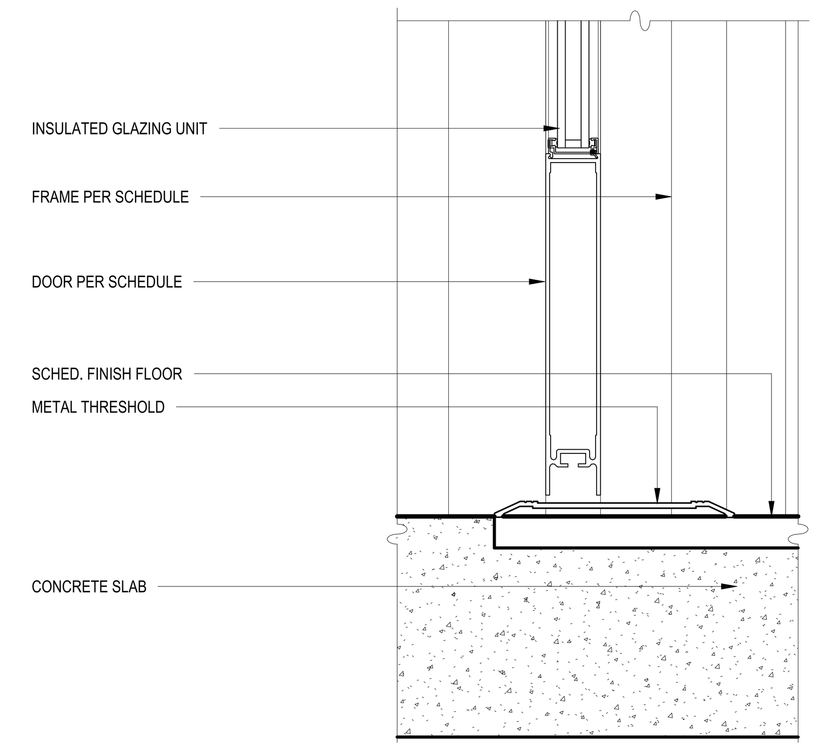

5 A601 SILL DETAIL- EXTERIOR HOLLOW METAL DOOR FULL LITE
SCALE : 3" = 1'-0"

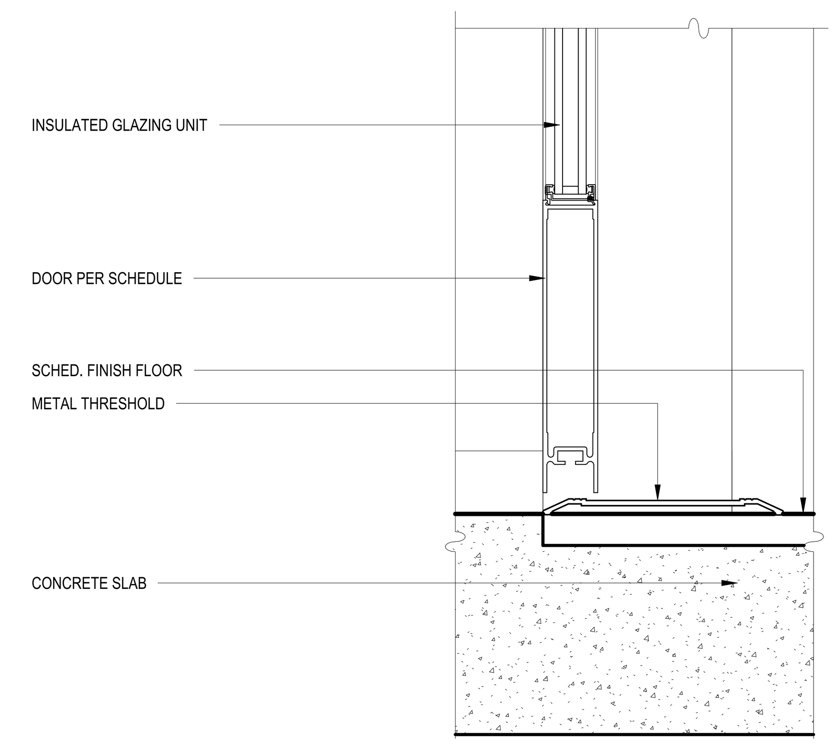

1 A601 SILL DETAIL- EXTERIOR STOREFRONT GLASS DOOR
SCALE : 3" = 1'-0"

FSGROUP® ARCHITECTS
16575 Village Drive
Houston Texas 77040
713 344 1752 PH
fsdesignbuild.com

PROJECT NAME

INFORMATION TECHNOLGY BUILDING
1419 EUGENE HEIMANN CIRCLE
FORT BEND COUNTY . RICHMOND . TEXAS 77469

CONSULTANTS

PROFESSIONAL SEAL

ISSUED FOR
ISSUED FOR PROPOSALS AND PERMIT

REVISIONS

No.	DESCRIPTION	DATE

KEY PLAN

TRUE NORTH

SHEET TITLE
DOOR DETAILS

SCALE 3" = 1'-0"
DATE 05/15/2024
PROJECT NUMBER 2319
SHEET NUMBER
A601

PLOT DATE: 5/21/2024 5:13:09 PM FILE PATH: Autodesk Docs://FBC IT Building/FBIT_A23.rvt

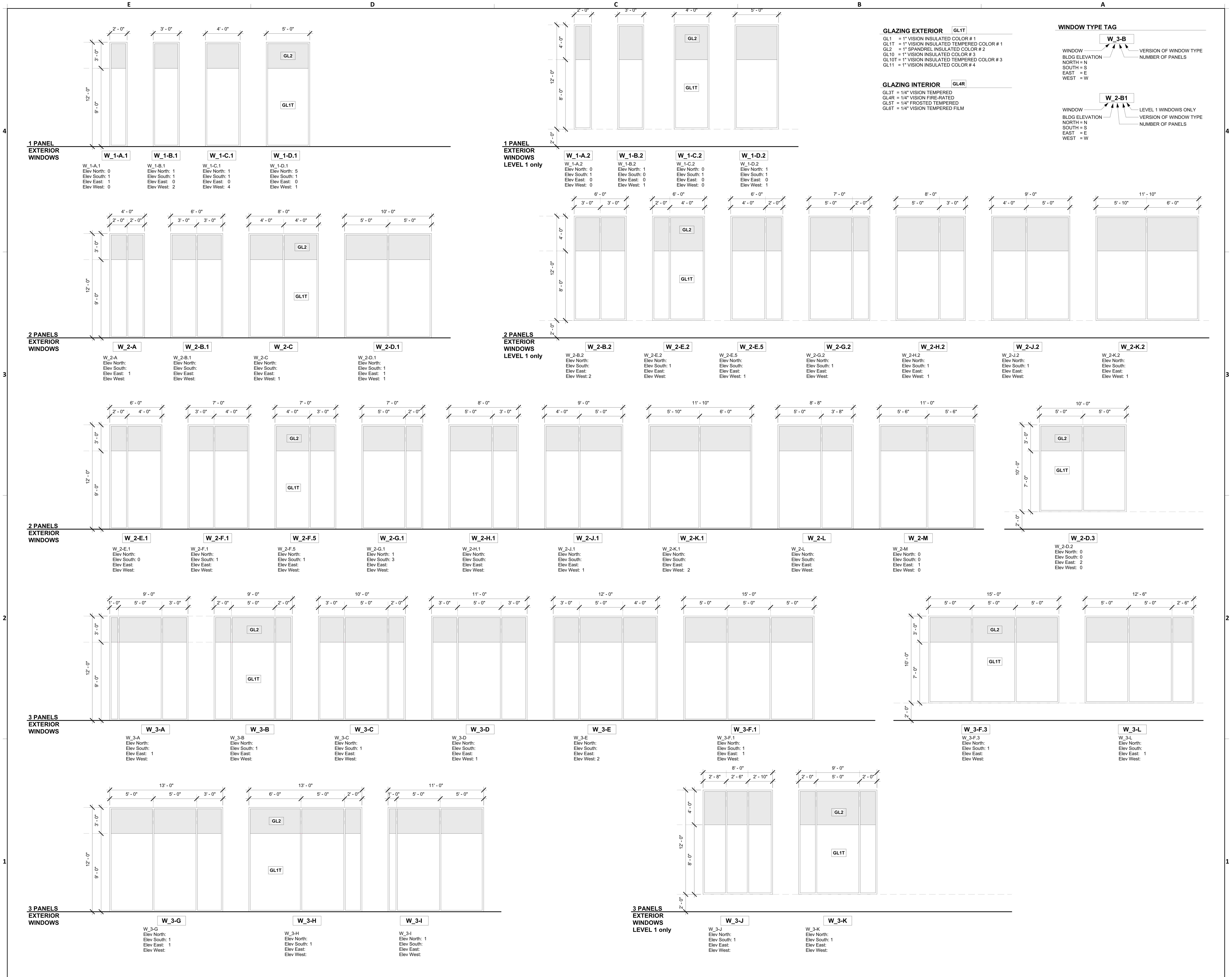

GLAZING EXTERIOR GL1T

- GL1 = 1" VISION INSULATED COLOR # 1
- GL1T = 1" VISION INSULATED TEMPERED COLOR # 1
- GL2 = 1" SPANDREL INSULATED COLOR # 2
- GL10 = 1" VISION INSULATED COLOR # 3
- GL10T = 1" VISION INSULATED TEMPERED COLOR # 3
- GL11 = 1" VISION INSULATED COLOR # 4

GLAZING INTERIOR GL4R

- GL3T = 1/4" VISION TEMPERED
- GL4R = 1/4" VISION FIRE-RATED
- GL5T = 1/4" FROSTED TEMPERED
- GL6T = 1/4" VISION TEMPERED FILM

WINDOW TYPE TAG

W_3-B
WINDOW
BLDG ELEVATION
NORTH = N
SOUTH = S
EAST = E
WEST = W
VERSION OF WINDOW TYPE
NUMBER OF PANELS

W_2-B1
WINDOW
BLDG ELEVATION
NORTH = N
SOUTH = S
EAST = E
WEST = W
LEVEL 1 WINDOWS ONLY
VERSION OF WINDOW TYPE
NUMBER OF PANELS

FSGROUP ARCHITECTS
16575 Village Drive
Houston Texas 77040
713 344 1752 PH
fsdesignbuild.com

PROJECT NAME

THE STATE OF TEXAS · FORT BEND COUNTY

INFORMATION TECHNOLGY BUILDING
1419 EUGENE HEIMANN CIRCLE
FORT BEND COUNTY , RICHMOND , TEXAS 77469

CONSULTANTS

PROFESSIONAL SEAL

REGISTERED ARCHITECT FAKHRUDDIN N. SABIR 22631 STATE OF TEXAS
Sabir 5/15/2024

ISSUED FOR
ISSUED FOR PROPOSALS AND PERMIT

REVISIONS

No.	DESCRIPTION	DATE

KEY PLAN

TRUE NORTH

SHEET TITLE
WINDOW SCHEDULE EXTERIOR TYPES

SCALE 1/4" = 1'-0"
DATE 05/15/2024
PROJECT NUMBER 2319
SHEET NUMBER
A610

FILE PATH: Autodesk Docs://FBC IT Building/FBIT_A23.rvt
PLOT DATE: 5/21/2024 5:13:28 PM

GLAZING EXTERIOR — GL1T

GL1 = 1" VISION INSULATED COLOR # 1
GL1T = 1" VISION INSULATED TEMPERED COLOR # 1
GL2 = 1" SPANDREL INSULATED COLOR # 2
GL10 = 1" VISION INSULATED COLOR # 3
GL10T = 1" VISION INSULATED TEMPERED COLOR # 3
GL11 = 1" VISION INSULATED COLOR # 4

GLAZING INTERIOR — GL4R

GL3T = 1/4" VISION TEMPERED
GL4R = 1/4" VISION FIRE-RATED
GL5T = 1/4" FROSTED TEMPERED
GL6T = 1/4" VISION TEMPERED FILM

WINDOW TYPE TAG

W_3-B

WINDOW
BLDG ELEVATION
NORTH = N
SOUTH = S
EAST = E
WEST = W
VERSION OF WINDOW TYPE
NUMBER OF PANELS

W_2-B1

WINDOW
BLDG ELEVATION
NORTH = N
SOUTH = S
EAST = E
WEST = W
LEVEL 1 WINDOWS ONLY
VERSION OF WINDOW TYPE
NUMBER OF PANELS

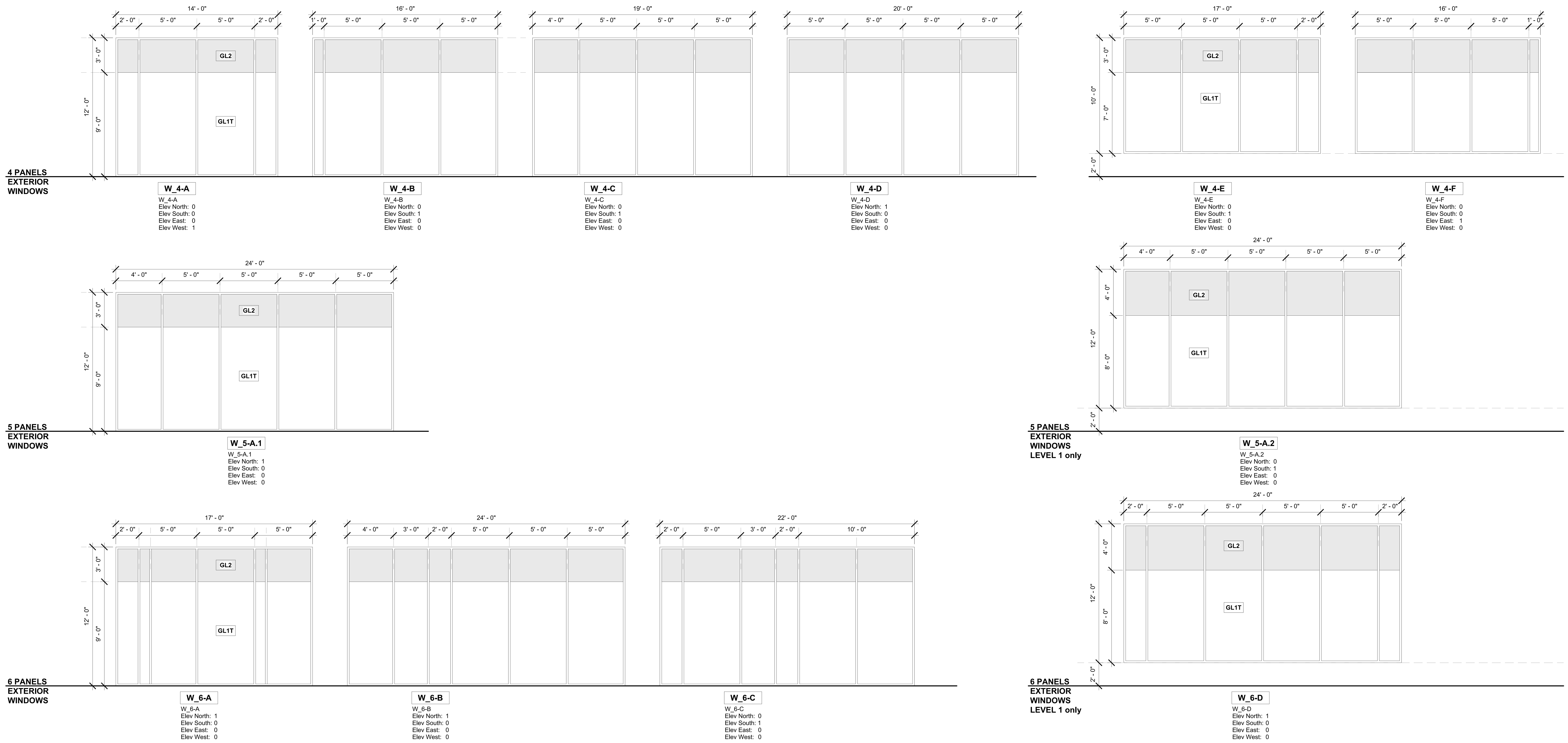

FSGROUP ARCHITECTS
16575 Village Drive
Houston Texas 77040
713 344 1752 PH
fsdesignbuild.com

PROJECT NAME

THE STATE OF TEXAS · FORT BEND COUNTY

INFORMATION TECHNOLGY BUILDING
1419 EUGENE HEIMANN CIRCLE
FORT BEND COUNTY . RICHMOND . TEXAS 77469

CONSULTANTS

PROFESSIONAL SEAL

REGISTERED ARCHITECT · FAKHRUDDIN N. SIBIR · 22631 · STATE OF TEXAS
5/15/2024

ISSUED FOR
ISSUED FOR PROPOSALS AND PERMIT

REVISIONS

No.	DESCRIPTION	DATE

KEY PLAN

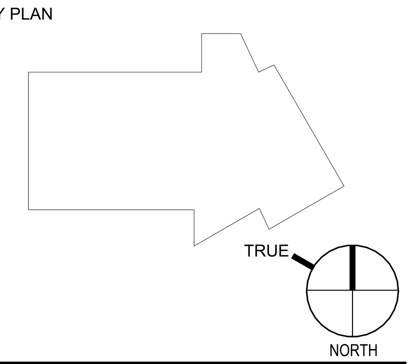

SHEET TITLE
WINDOW SCHEDULE EXTERIOR TYPES

SCALE 1/4" = 1'-0"
DATE 05/15/2024
PROJECT NUMBER 2319

SHEET NUMBER
A611

FILE PATH: Autodesk Docs://FBC IT Building/FBIT_A23.rvt
PLOT DATE: 5/21/2024 5:13:38 PM

GLAZING EXTERIOR (GL1T)

GL1 = 1" VISION INSULATED COLOR # 1
GL1T = 1" VISION INSULATED TEMPERED COLOR # 1
GL2 = 1" SPANDREL INSULATED COLOR # 2
GL10 = 1" VISION INSULATED COLOR # 3
GL10T = 1" VISION INSULATED TEMPERED COLOR # 3
GL11 = 1" VISION INSULATED COLOR # 4

GLAZING INTERIOR (GL4R)

GL3T = 1/4" VISION TEMPERED
GL4R = 1/4" VISION FIRE-RATED
GL5T = 1/4" FROSTED TEMPERED
GL6T = 1/4" VISION TEMPERED FILM

WINDOW TYPE TAG

W_3-B

WINDOW
BLDG ELEVATION
NORTH = N
SOUTH = S
EAST = E
WEST = W
VERSION OF WINDOW TYPE
NUMBER OF PANELS

W_2-B1

WINDOW
BLDG ELEVATION
NORTH = N
SOUTH = S
EAST = E
WEST = W
LEVEL 1 WINDOWS ONLY
VERSION OF WINDOW TYPE
NUMBER OF PANELS

GLAZING: EXTERIOR

GL1
- PRODUCT TYPE: 1" VISION INSULATED
- PRODUCT COATING: SNX 51/23 (#2)
- PRODUCT SERIES: SUPERNEUTRAL LOW-E
- SUBSTRATE: CLEAR (INDOOR/OUTDOOR)
- COLOR: TBD
- MANUFACTURER: GUARDIAN SUNGUARD
- LOCATION: EXTERIOR

GL1T
- PRODUCT TYPE: 1" VISION INSULATED TEMPERED
- PRODUCT COATING: SNX 51/23 (#2)
- PRODUCT SERIES: SUPERNEUTRAL LOW-E
- SUBSTRATE: CLEAR (INDOOR/OUTDOOR)
- COLOR: TBD
- MANUFACTURER: GUARDIAN SUNGUARD
- LOCATION: EXTERIOR

GL2
- PRODUCT TYPE: 1" SPANDREL INSULATED
- PRODUCT COATING: SNX 51/23 (#2)
- PRODUCT SERIES: SUPERNEUTRAL LOW-E
- SUBSTRATE: CLEAR (INDOOR/OUTDOOR)
- COLOR: TBD
- MANUFACTURER: GUARDIAN SUNGUARD
- LOCATION: EXTERIOR

GL10
- PRODUCT TYPE: 1" VISION INSULATED
- PRODUCT COATING: SNX 51/23 (#2)
- PRODUCT SERIES: SUPERNEUTRAL LOW-E
- SUBSTRATE: CLEAR (INDOOR/OUTDOOR)
- COLOR: TBD
- MANUFACTURER: GUARDIAN SUNGUARD
- LOCATION: LOBBY

GL10T
- PRODUCT TYPE: 1" VISION INSULATED TEMPERED
- PRODUCT COATING: SNX 51/23 (#2)
- PRODUCT SERIES: SUPERNEUTRAL LOW-E
- SUBSTRATE: CLEAR (INDOOR/OUTDOOR)
- COLOR: TBD
- MANUFACTURER: GUARDIAN SUNGUARD
- LOCATION: LOBBY

GL11
- PRODUCT TYPE: 1" VISION INSULATED
- PRODUCT COATING: SNX 51/23 (#2)
- PRODUCT SERIES: SUPERNEUTRAL LOW-E
- SUBSTRATE: CLEAR (INDOOR/OUTDOOR)
- COLOR: TBD
- MANUFACTURER: GUARDIAN SUNGUARD
- LOCATION: LOBBY - ALTERNATE COLOR

LEVEL 1 only
EXTERIOR
WINDOWS
LOBBY

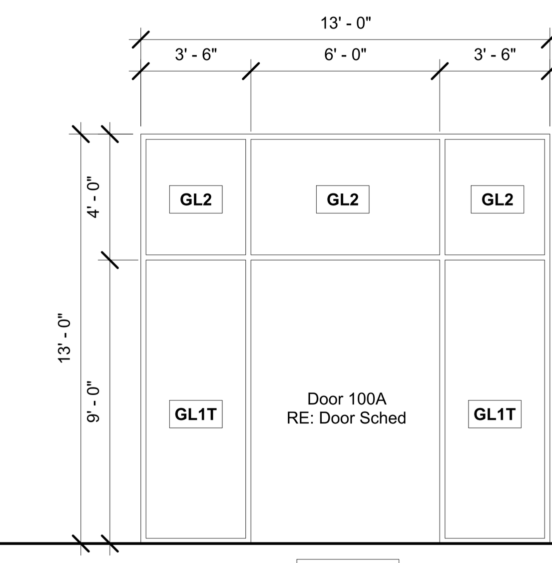

WS-V3a
Main Entry Vestibule | Exterior Doors
Elev South: 1 (Lobby)

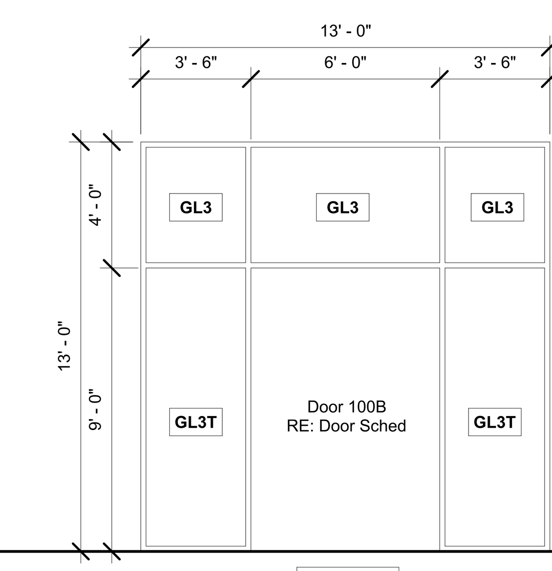

WS-V3b
Main Entry Vestibule | Interior Doors
Elev South: 1 (Lobby)

FSGROUP® ARCHITECTS
16575 Village Drive
Houston Texas 77040
713 344 1752 PH
fsdesignbuild.com

PROJECT NAME

INFORMATION TECHNOLGY BUILDING
1419 EUGENE HEIMANN CIRCLE
FORT BEND COUNTY . RICHMOND . TEXAS 77469

CONSULTANTS

PROFESSIONAL SEAL

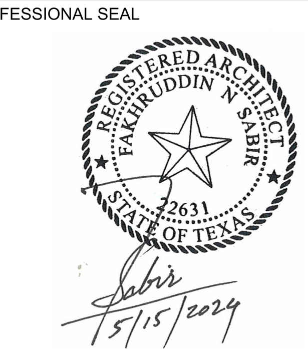

ISSUED FOR

ISSUED FOR PROPOSALS AND PERMIT

REVISIONS

No.	DESCRIPTION	DATE

KEY PLAN

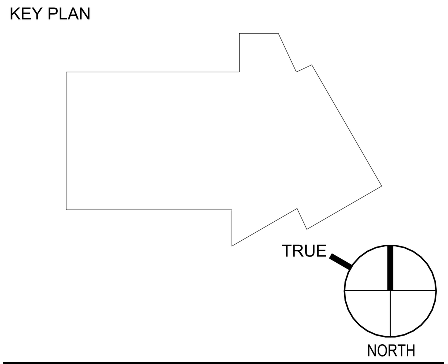

SHEET TITLE

WINDOW SCHEDULE
EXTERIOR TYPES

SCALE: As indicated

DATE: 05/15/2024

PROJECT NUMBER: 2319

SHEET NUMBER

A612

FILE PATH: Autodesk Docs://FBC IT Building/FBIT_A23.rvt

PLOT DATE: 5/21/2024 5:13:55 PM

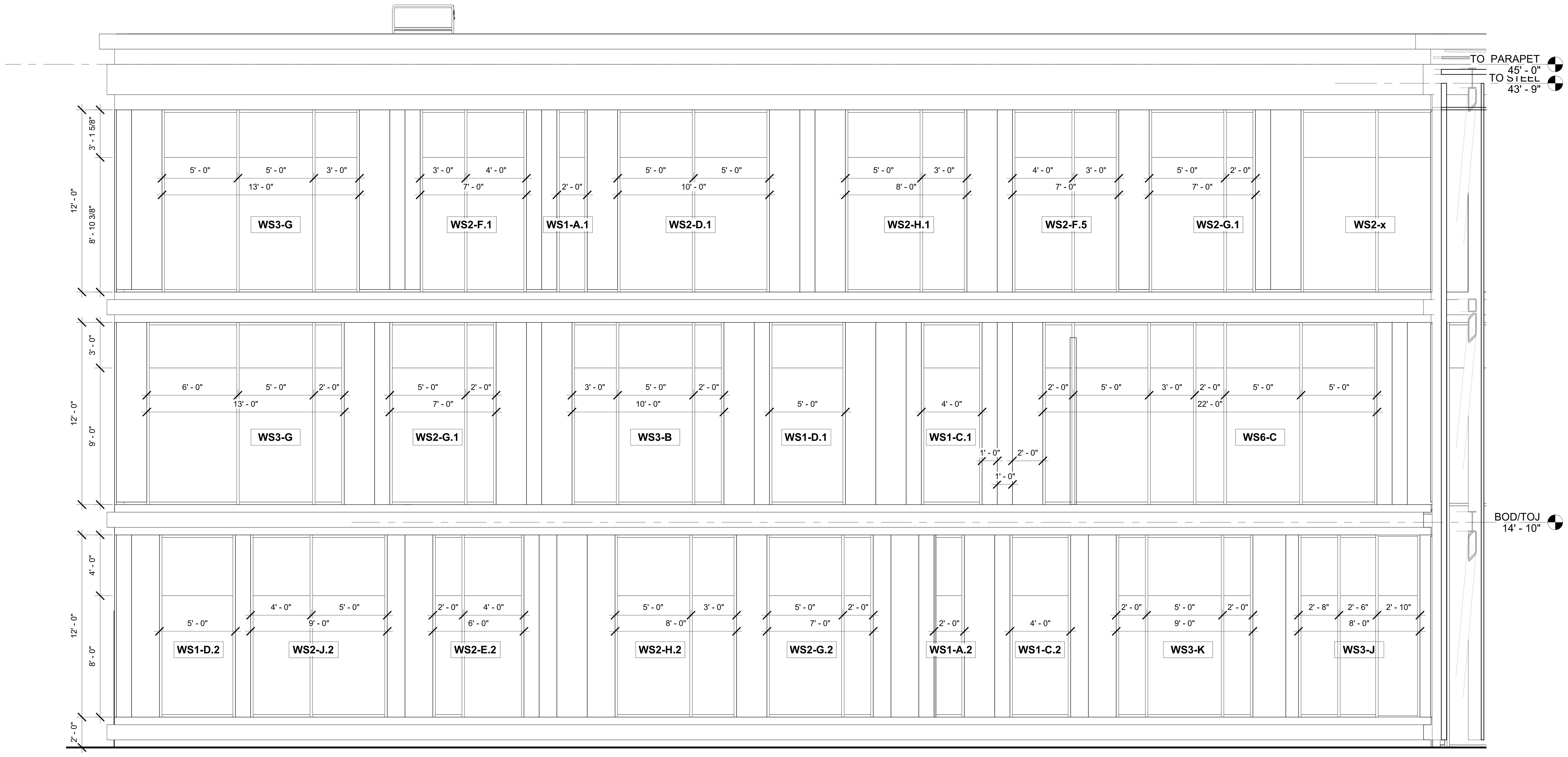

2
A615
EXT WINDOWS: SOUTH ELEVATION @ BULLPEN
SCALE : 1/4" = 1'-0"

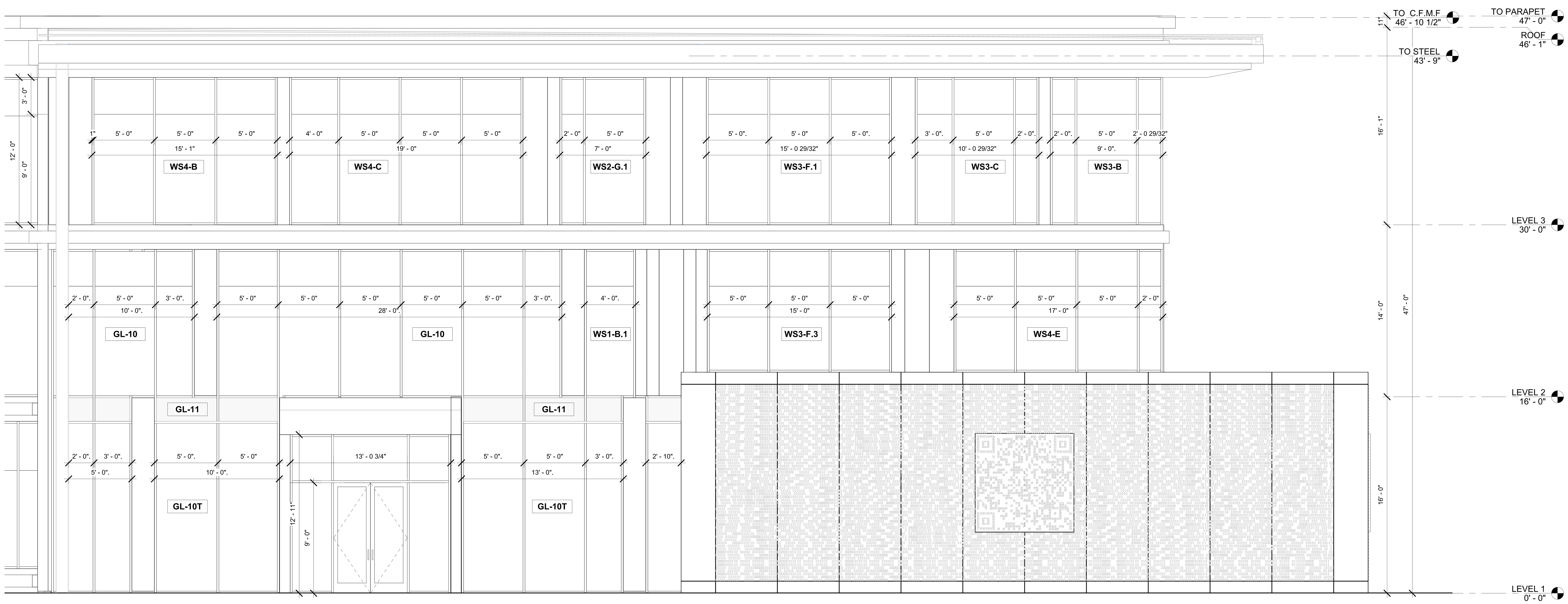

1
A615
EXT WINDOWS: SOUTH ELEVATION @ LOBBY
SCALE : 1/4" = 1'-0"

FILE PATH: Autodesk Docs://FBC IT Building/FBIT_A23.rvt
PLOT DATE: 5/21/2024 5:14:46 PM

FSGROUP ARCHITECTS
16575 Village Drive
Houston Texas 77040
713 344 1752 PH
fsdesignbuild.com

PROJECT NAME

THE STATE OF TEXAS FORT BEND COUNTY

INFORMATION TECHNOLGY BUILDING
1419 EUGENE HEIMANN CIRCLE
FORT BEND COUNTY . RICHMOND . TEXAS 77469

CONSULTANTS

PROFESSIONAL SEAL

REGISTERED ARCHITECT FAKHRUDDIN 'N' SABIR 22631 STATE OF TEXAS
5/15/2024

ISSUED FOR
ISSUED FOR PROPOSALS AND PERMIT

REVISIONS

No.	DESCRIPTION	DATE

KEY PLAN

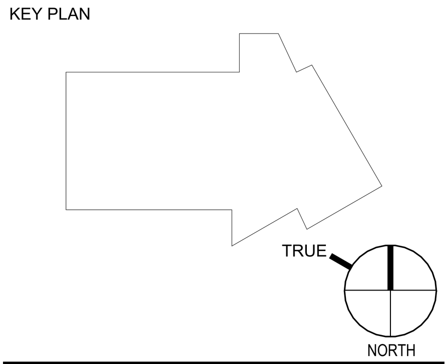

SHEET TITLE
WINDOW SCHEDULE
BLDG EXTERIOR
SOUTH

SCALE 1/4" = 1'-0"

DATE 05/15/2024

PROJECT NUMBER 2319

SHEET NUMBER
A615

PLOT DATE: 5/21/2024 5:16:10 PM
FILE PATH: Autodesk Docs://FBC IT Building/FBIT_A23.rvt

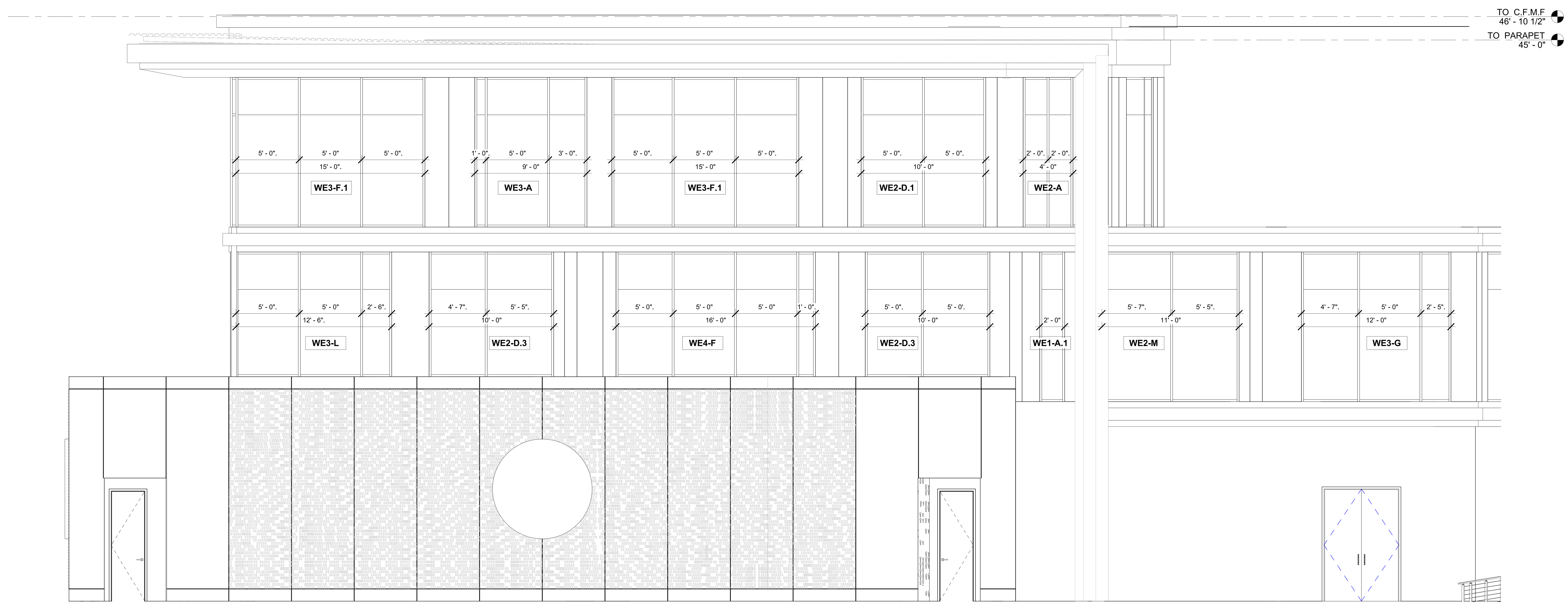

1
A616
EXT WINDOWS: EAST ELEVATION EAST @ TRAINING RM
SCALE : 1/4" = 1'-0"

FSGROUP®
ARCHITECTS
16575 Village Drive
Houston Texas 77040
713 344 1752 PH
fsdesignbuild.com

PROJECT NAME

THE STATE OF TEXAS
FORT BEND COUNTY

INFORMATION TECHNOLGY BUILDING
1419 EUGENE HEIMANN CIRCLE
FORT BEND COUNTY . RICHMOND . TEXAS 77469

CONSULTANTS

PROFESSIONAL SEAL

REGISTERED ARCHITECT
FAKHRUDDIN N. SABIR
22631
STATE OF TEXAS
5/15/2024

ISSUED FOR
ISSUED FOR PROPOSALS AND PERMIT

REVISIONS

No.	DESCRIPTION	DATE

KEY PLAN

TRUE
NORTH

SHEET TITLE
WINDOW SCHEDULE
BLDG EXTERIOR
EAST

SCALE	1/4" = 1'-0"
DATE	05/15/2024
PROJECT NUMBER	2319
SHEET NUMBER	A616

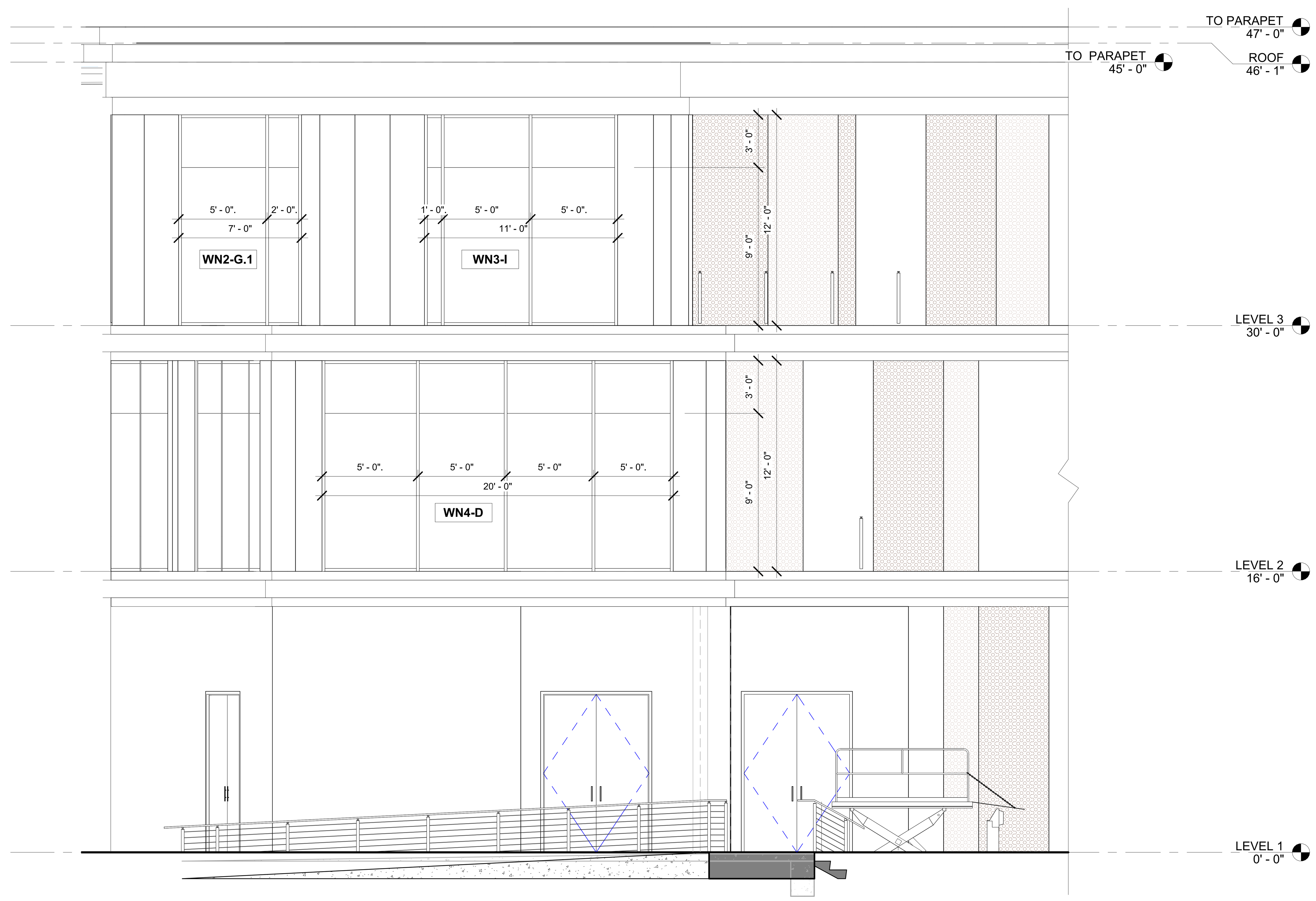

2 A617 EXT WINDOWS: NORTH ELEVATION @ LOADING DOCK
SCALE : 1/4" = 1'-0"

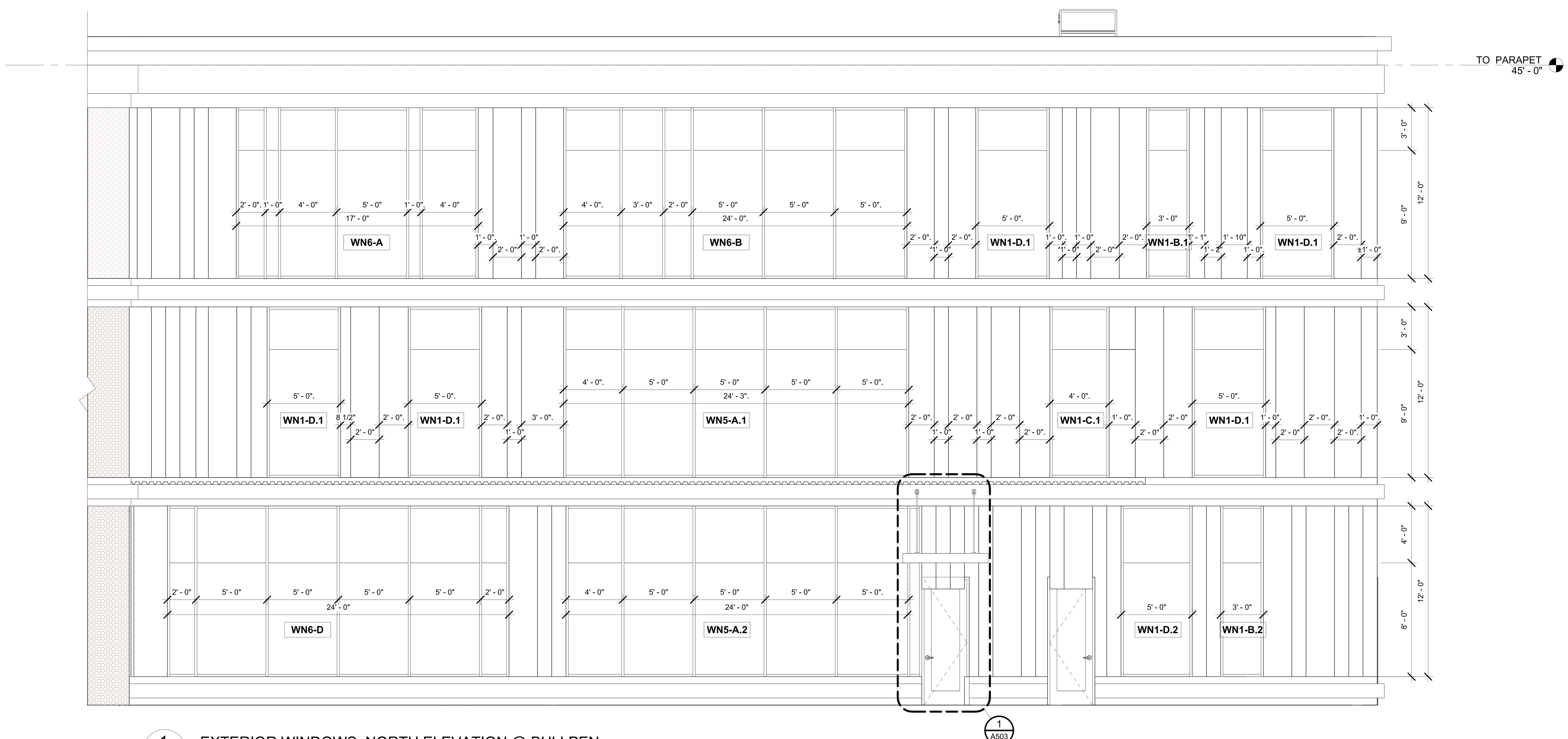

1 A617 EXTERIOR WINDOWS: NORTH ELEVATION @ BULLPEN
SCALE : 1/4" = 1'-0"

FILE PATH: Autodesk Docs://FBC IT Building/FBIT_A23.rvt

PLOT DATE: 5/21/2024 5:16:37 PM

FSGROUP® ARCHITECTS
16575 Village Drive
Houston Texas 77040
713 344 1752 PH
fsdesignbuild.com

PROJECT NAME

THE STATE OF TEXAS · FORT BEND COUNTY

INFORMATION TECHNOLGY BUILDING
1419 EUGENE HEIMANN CIRCLE
FORT BEND COUNTY . RICHMOND . TEXAS 77469

CONSULTANTS

PROFESSIONAL SEAL

REGISTERED ARCHITECT FAKHRUDDIN N SABIR 22631 STATE OF TEXAS

5/15/2024

ISSUED FOR

ISSUED FOR PROPOSALS AND PERMIT

REVISIONS

No.	DESCRIPTION	DATE

KEY PLAN

TRUE NORTH

SHEET TITLE

WINDOW SCHEDULE
BLDG EXTERIOR
NORTH

SCALE 1/4" = 1'-0"

DATE 05/15/2024

PROJECT NUMBER 2319

SHEET NUMBER

A617

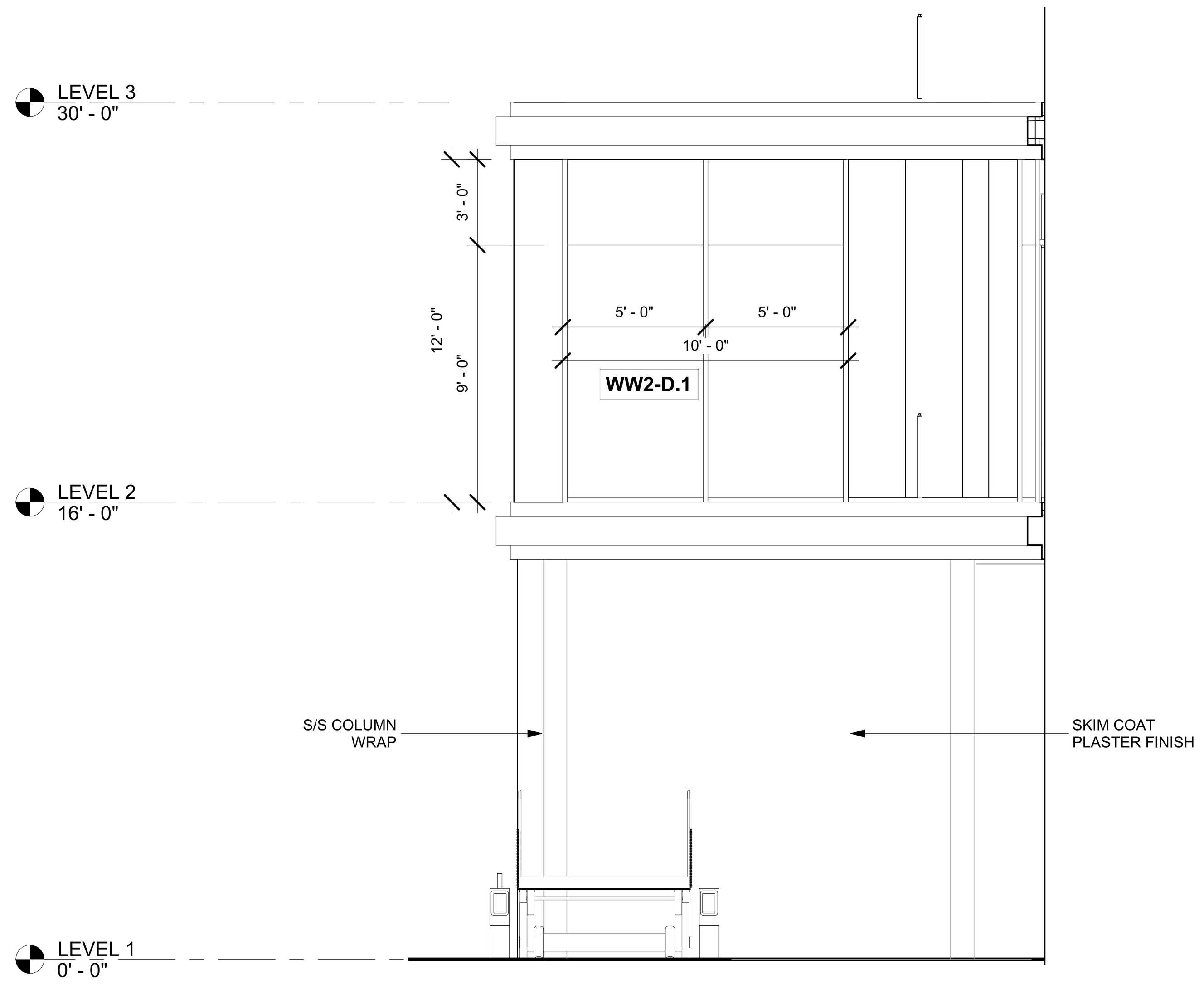

3
A618
EXT WINDOWS: WEST ELEVATION @ LOADING DOCK
SCALE : 1/4" = 1'-0"

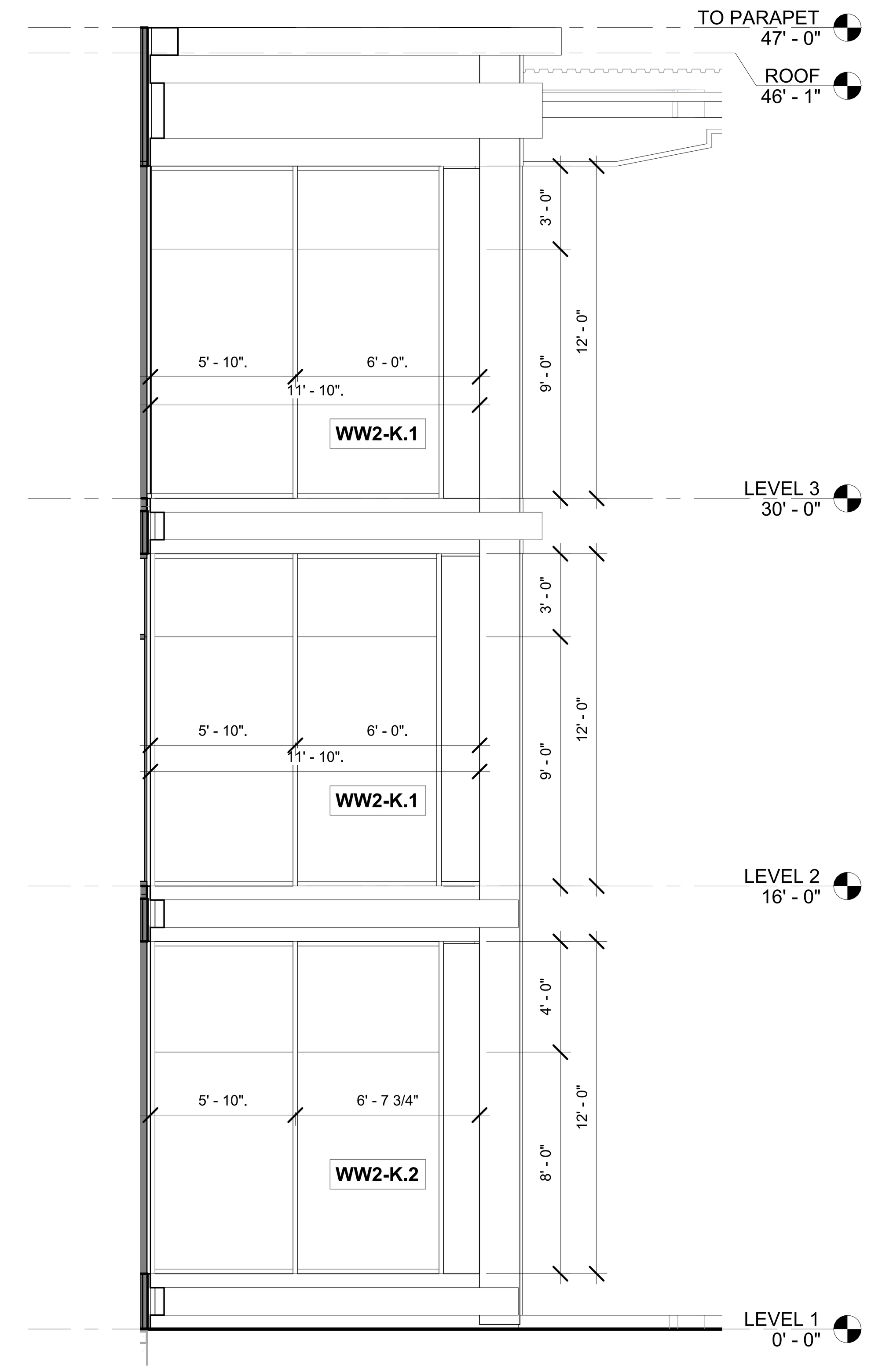

2
A618
EXT WINDOWS: WEST ELEVATION @ LOBBY
SCALE : 1/4" = 1'-0"
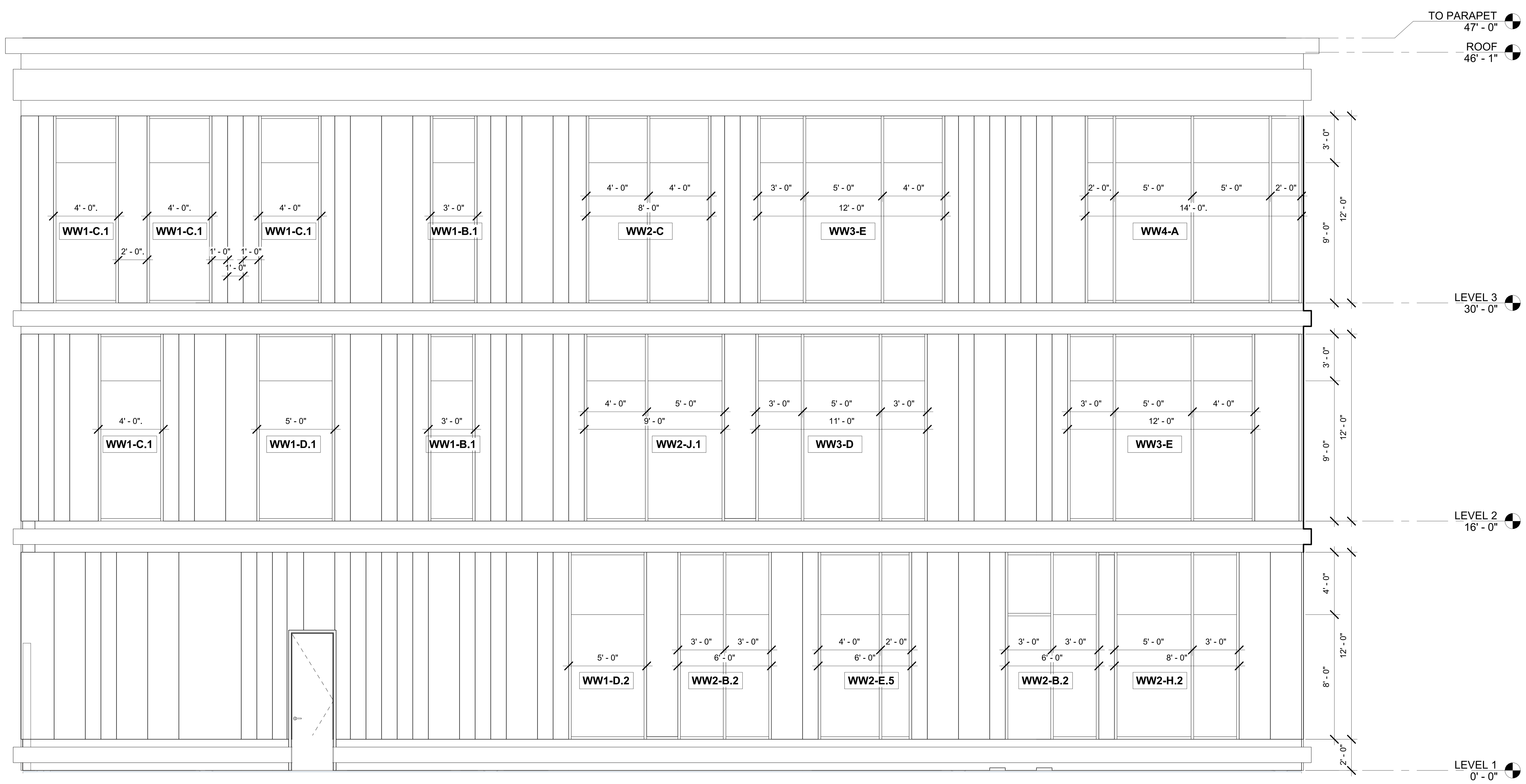
1
A618
EXT WINDOWS: WEST ELEVATION @ BULLPEN
SCALE : 1/4" = 1'-0"

FSGROUP®
ARCHITECTS
16575 Village Drive
Houston Texas 77040
713 344 1752 PH
fsdesignbuild.com

PROJECT NAME

INFORMATION TECHNOLGY BUILDING
1419 EUGENE HEIMANN CIRCLE
FORT BEND COUNTY . RICHMOND . TEXAS 77469

CONSULTANTS

PROFESSIONAL SEAL

ISSUED FOR

ISSUED FOR PROPOSALS AND PERMIT

REVISIONS

No.	DESCRIPTION	DATE

KEY PLAN

TRUE
NORTH

SHEET TITLE

WINDOW SCHEDULE
BLDG EXTERIOR
WEST

SCALE 1/4" = 1'-0"

DATE 05/15/2024

PROJECT NUMBER 2319

SHEET NUMBER

A618

FILE PATH: Autodesk Docs://FBC IT Building/FBIT_A23.rvt

PLOT DATE: 5/21/2024 5:16:53 PM

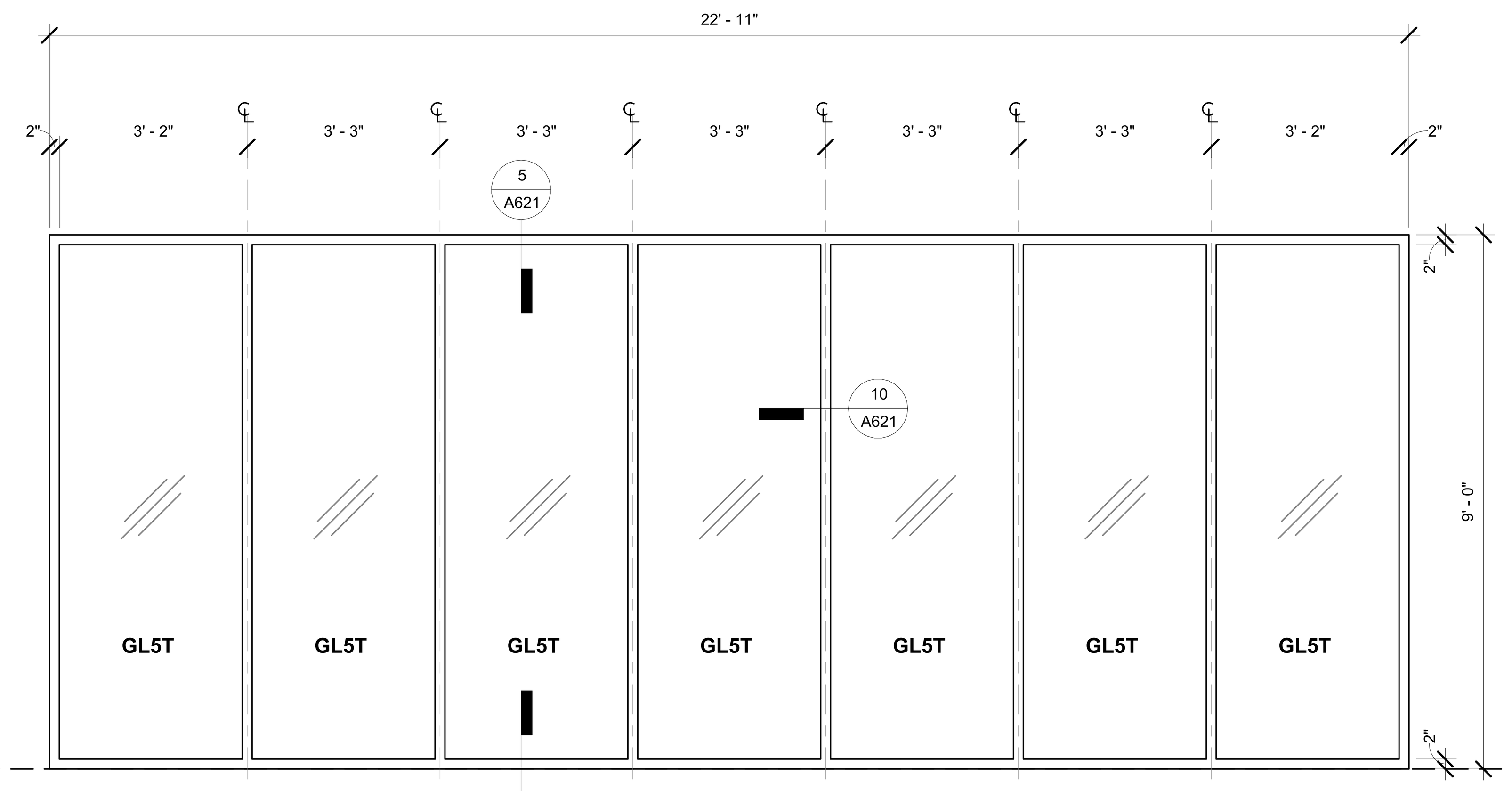

WI-7
- CYBER 326

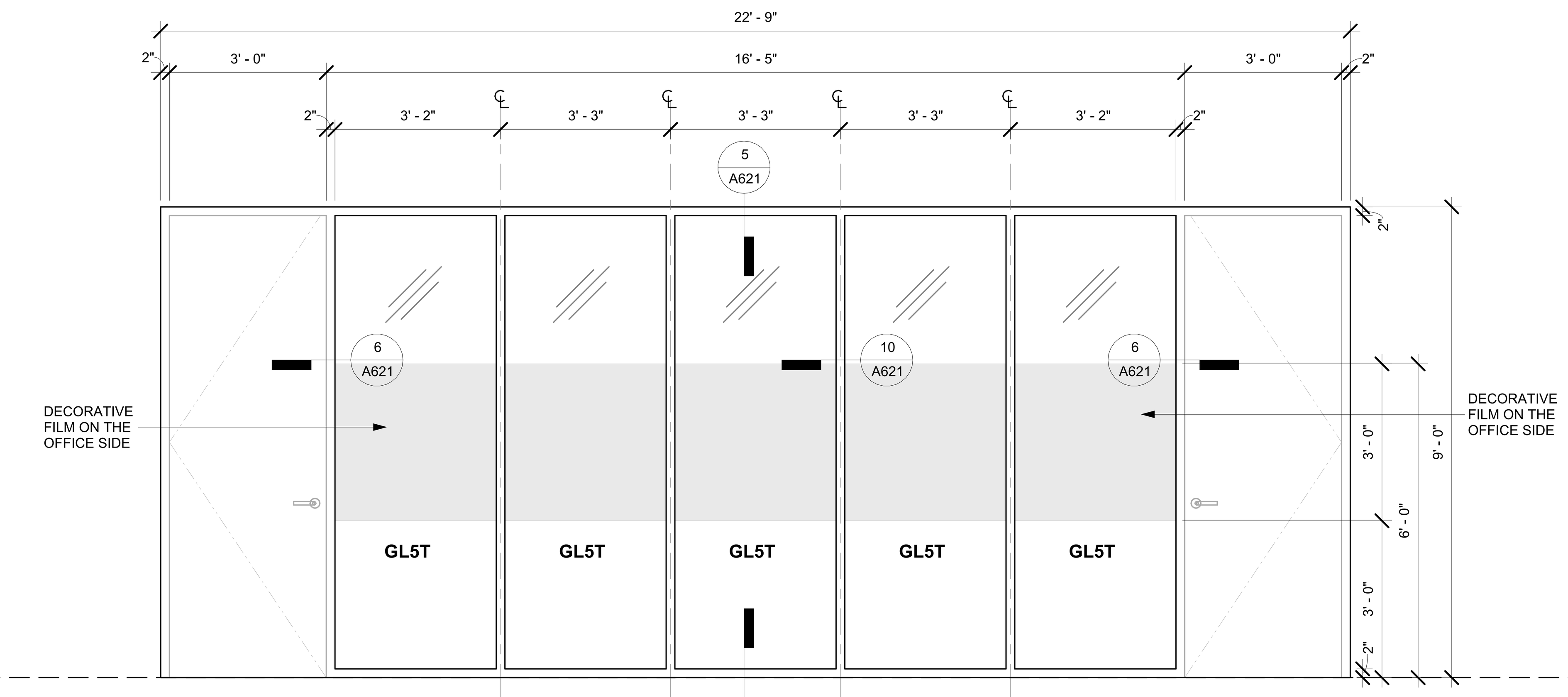

WI-5
- CONFERENCE RM 310

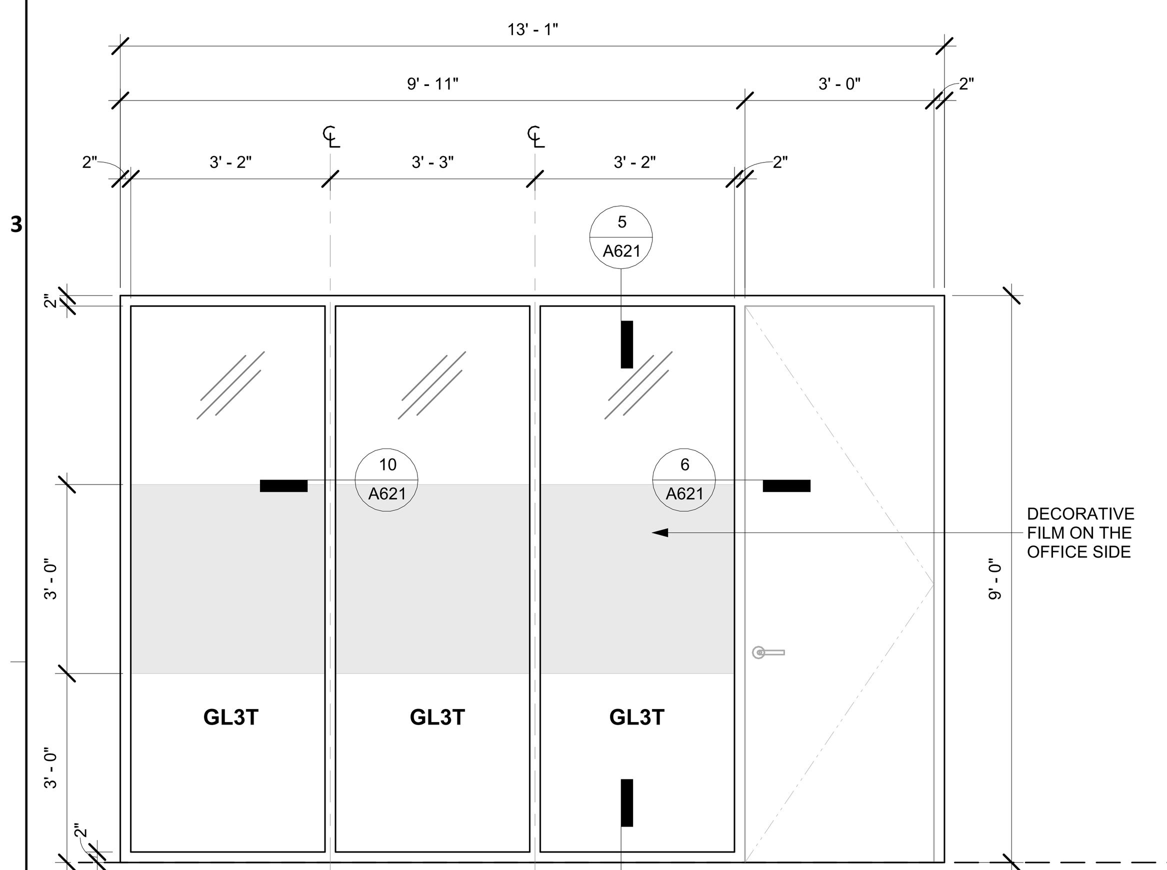

WI-3R
- GYM 130
- OFFICE RM 224, 227
- OFFICE RM 325, 328

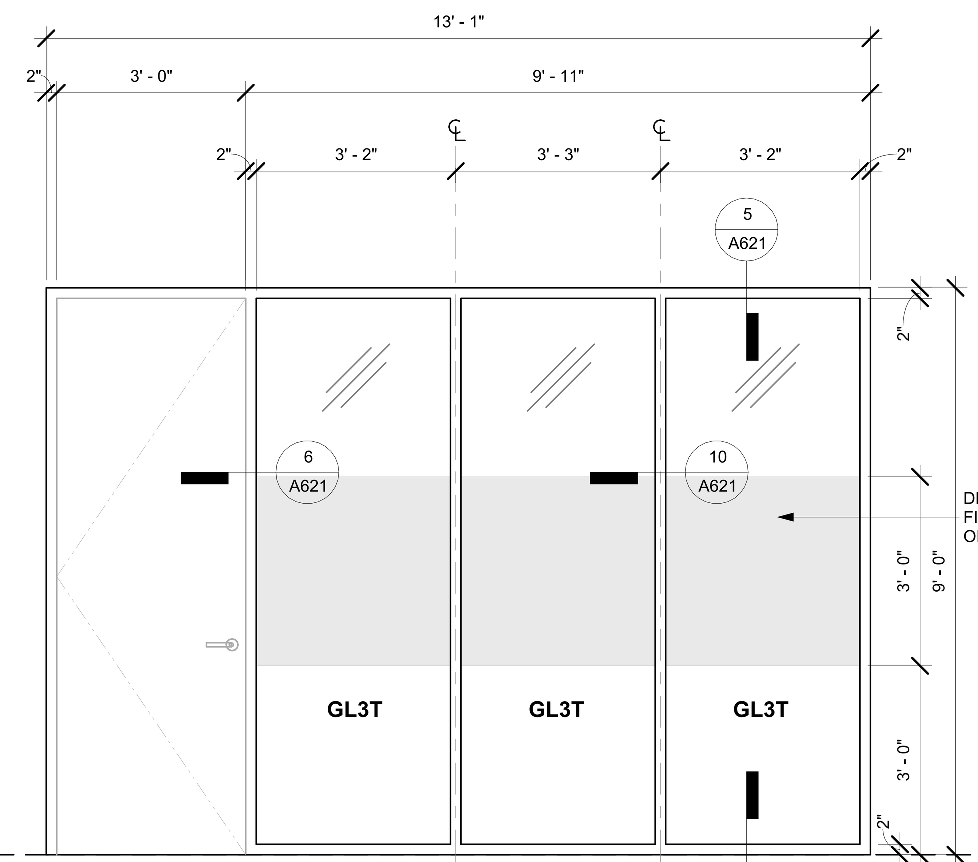

WI-3L
- OFFICE RM 326
- TESTING HUDDLE RM 309

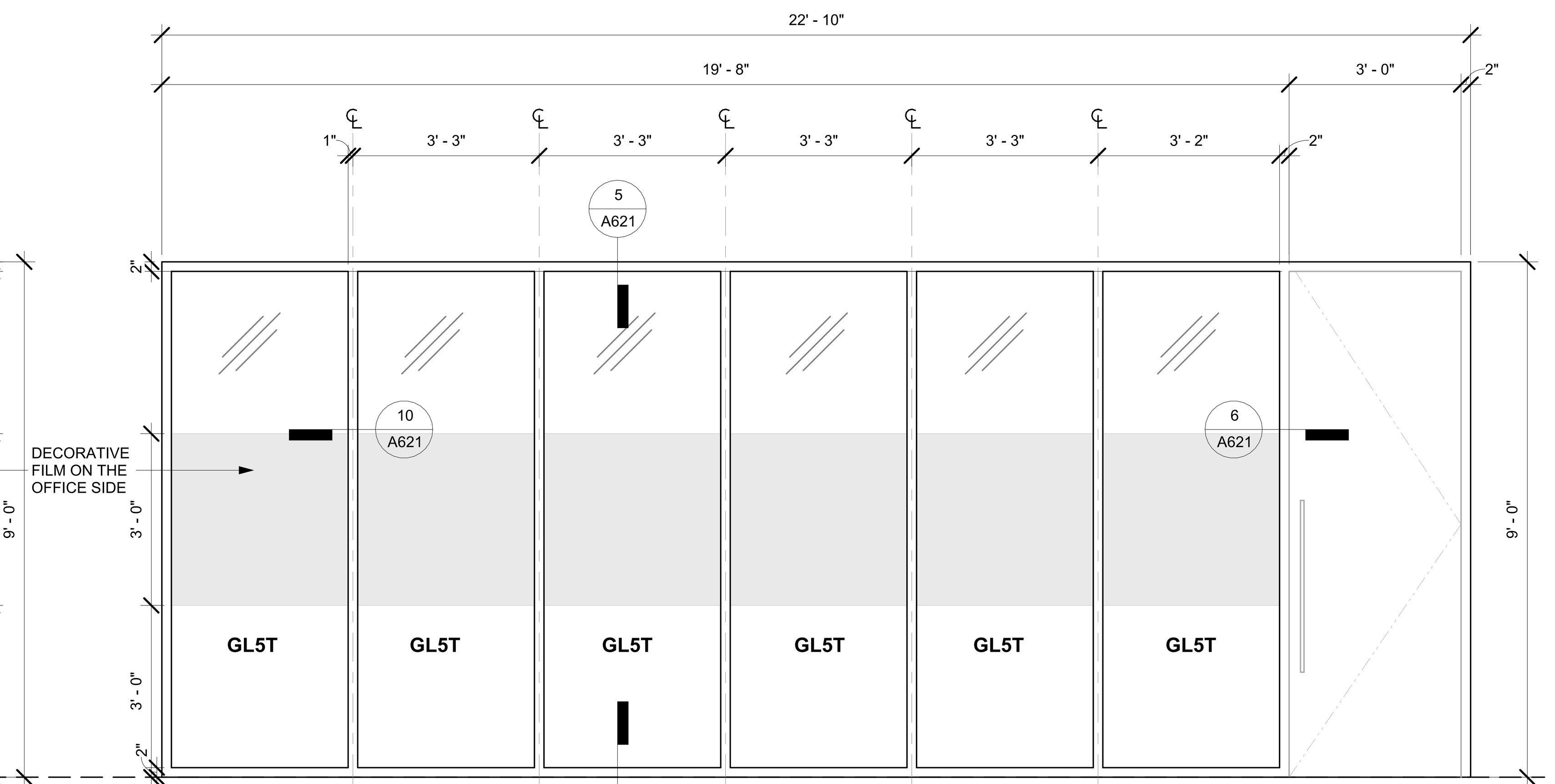

WI-6
- CONFERENCE RM 221

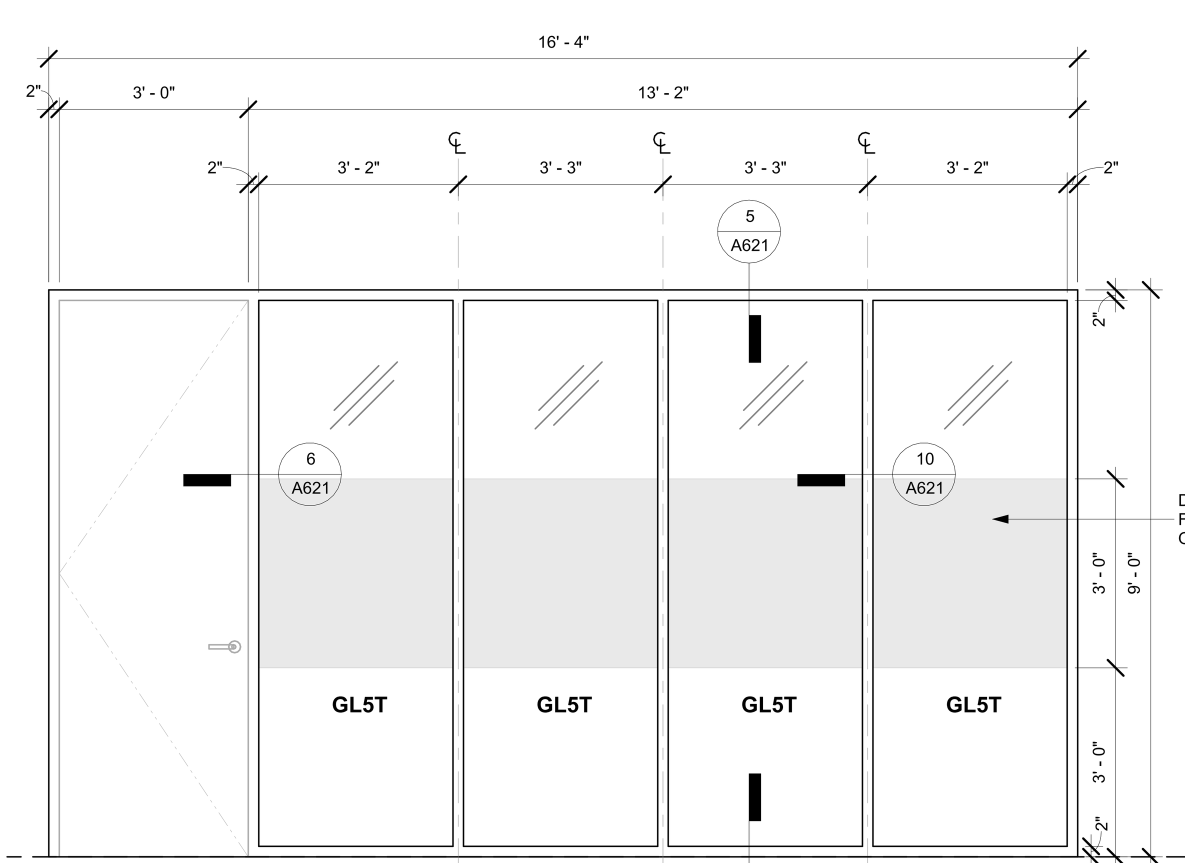

WI-4
- OFFICE ASSITANT DIRECTOR RM 308

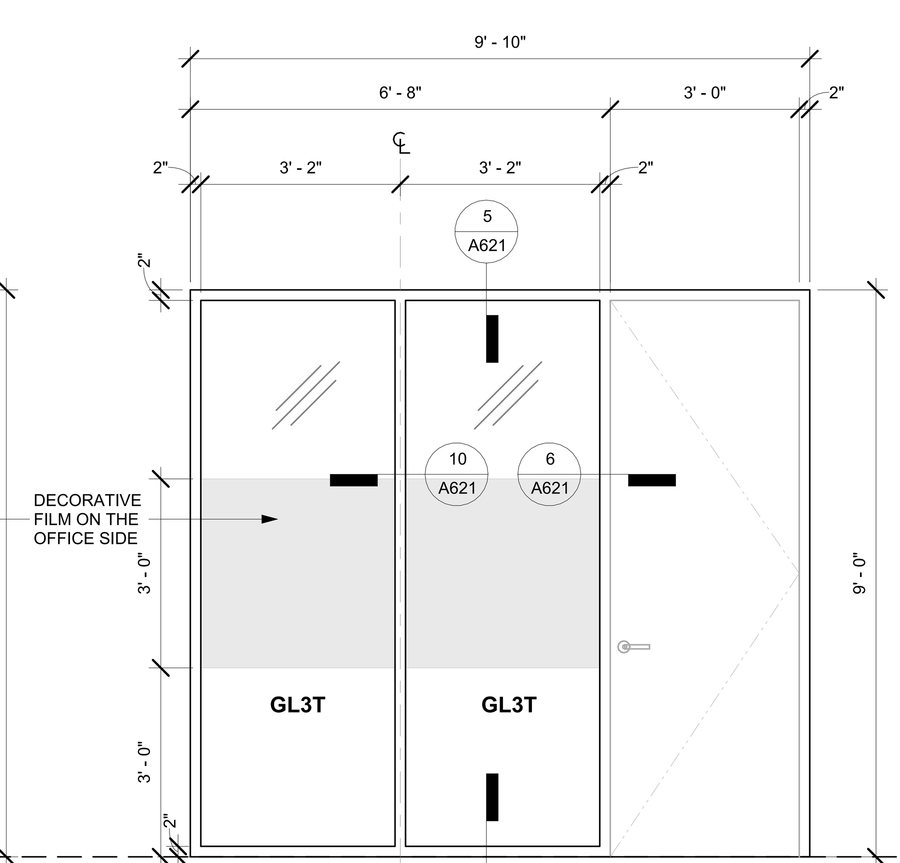

WI-2R
- OFFICE RM 122, 123, 124, 125
- OFFICE RM 222
- OFFICE RM 321, 323

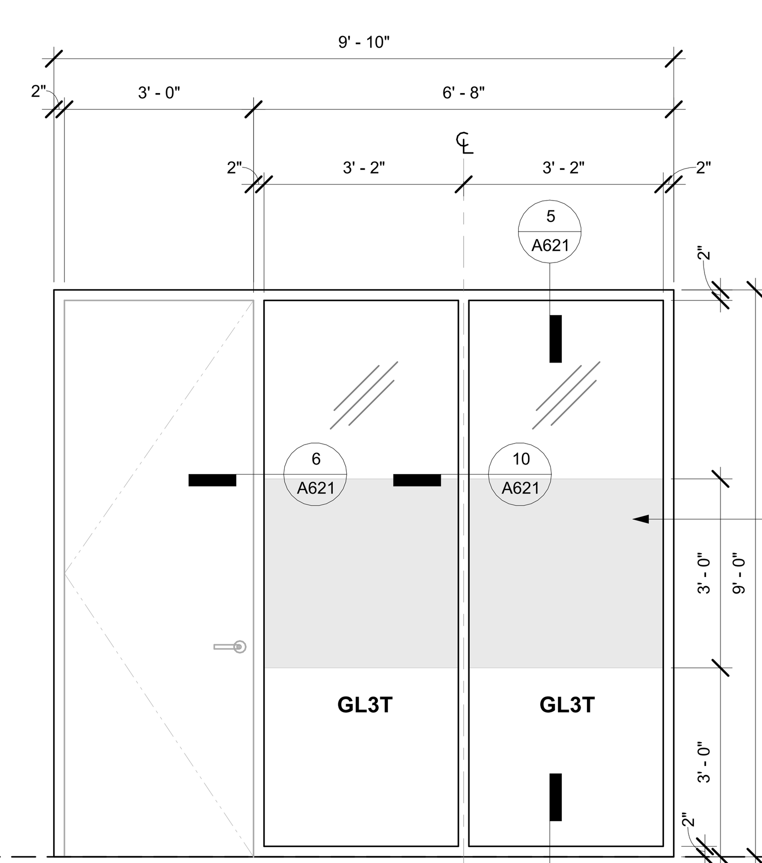

WI-2L
- OFFICE RM 126
- OFFICE RM 223, 225, 228, 229
- OFFICE RM 322, 324, 329, 330

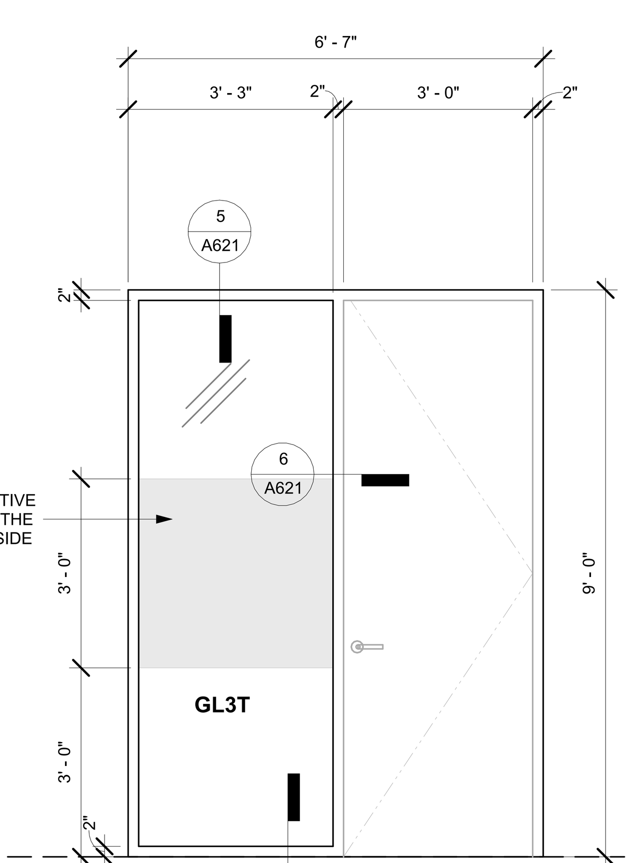

WI-1
- CONFERENCE RM 129

GENERAL NOTES: INTERIOR WINDOWS

A. INTERIOR WINDOW SYSTEM BASIS OF DESIGN IS RACO INTERIOR OFFICE FRONTS

GLAZING INTERIOR GL4R

GL3T = 1/4" VISION TEMPERED
GL4R = 1/4" VISION FIRE-RATED
GL5T = 1/4" FROSTED TEMPERED
GL6T = 1/4" VISION TEMPERED FILM

FSGROUP ARCHITECTS
16575 Village Drive
Houston Texas 77040
713 344 1752 PH
fsdesignbuild.com

PROJECT NAME

INFORMATION TECHNOLGY BUILDING
1419 EUGENE HEIMANN CIRCLE
FORT BEND COUNTY . RICHMOND . TEXAS 77469

CONSULTANTS

PROFESSIONAL SEAL

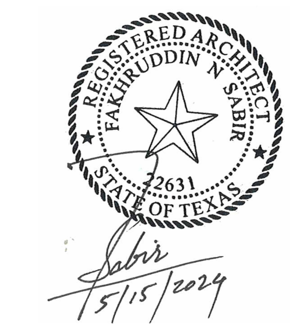

ISSUED FOR

ISSUED FOR PROPOSALS AND PERMIT

REVISIONS

No.	DESCRIPTION	DATE

KEY PLAN

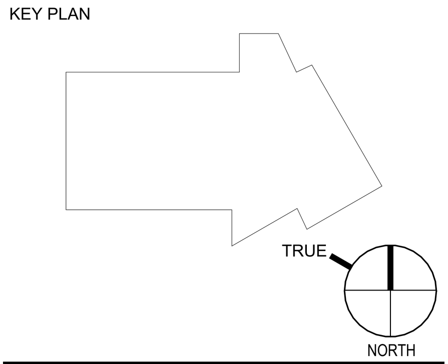

SHEET TITLE

WINDOW SCHEDULE INTERIOR TYPES

SCALE: As indicated

DATE: 05/15/2024

PROJECT NUMBER: 2319

SHEET NUMBER: **A620**

FILE PATH: Autodesk Docs://FBC IT Building/FBIT_A23.rvt

PLOT DATE: 5/21/2024 5:17:08 PM

E D C B A

4

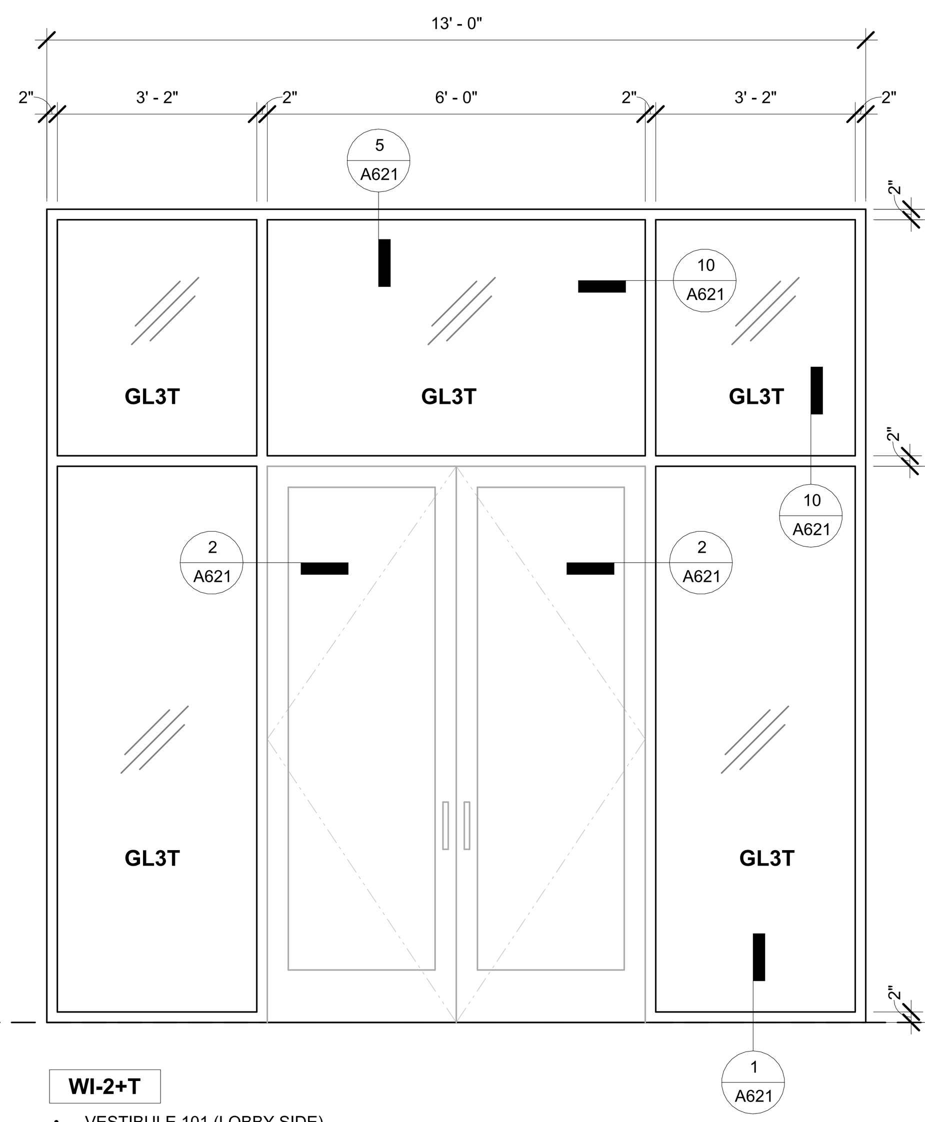

WI-2+T

- VESTIBULE 101 (LOBBY SIDE)

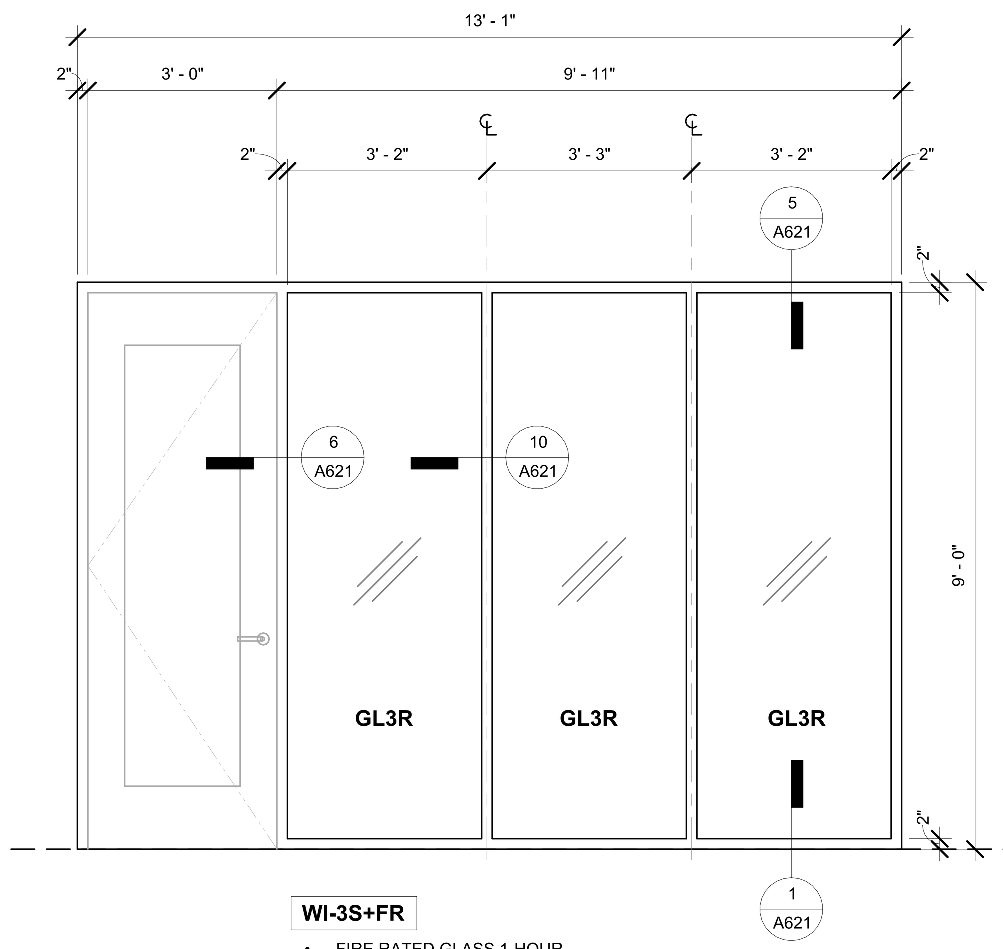

WI-3S+FR

- FIRE RATED GLASS 1-HOUR
- STAIR 1 300A

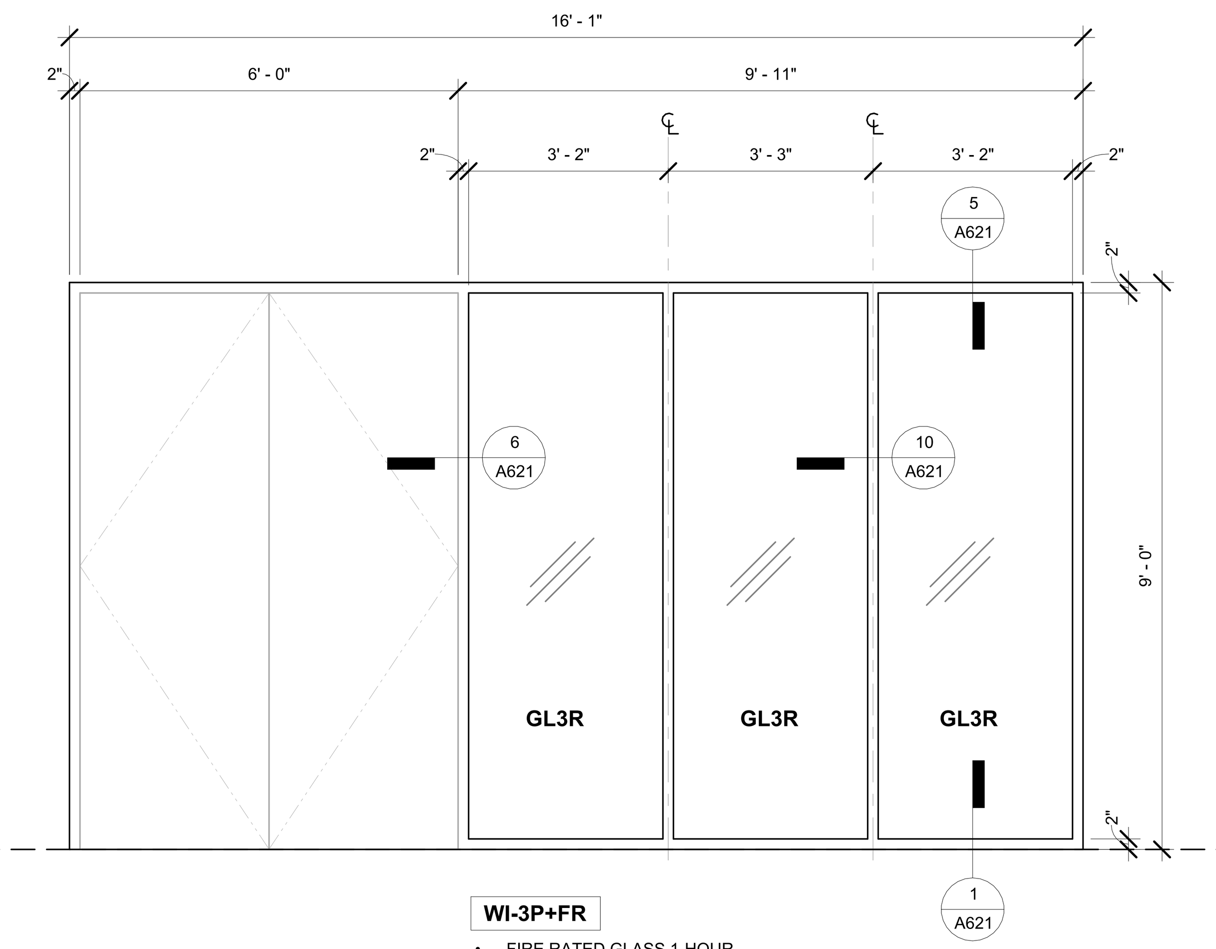

WI-3P+FR

- FIRE RATED GLASS 1-HOUR
- DATA CENTER RM 240

3

GENERAL NOTES: INTERIOR WINDOWS

A. INTERIOR WINDOW SYSTEM BASIS OF DESIGN IS RACO INTERIOR OFFICE FRONTS

GLAZING INTERIOR GL4R

GL3T = 1/4" VISION TEMPERED
GL4R = 1/4" VISION FIRE-RATED
GL5T = 1/4" FROSTED TEMPERED
GL6T = 1/4" VISION TEMPERED FILM

2

BASIS OF DESIGN: RACO INTERIOR OFFICE FRONTS ALUMINUM FRAME SYSTEM

NOTE: ALL DETAILS ARE TO BE VERIFIED THRU SHOP DRAWING SUBMITTALS.

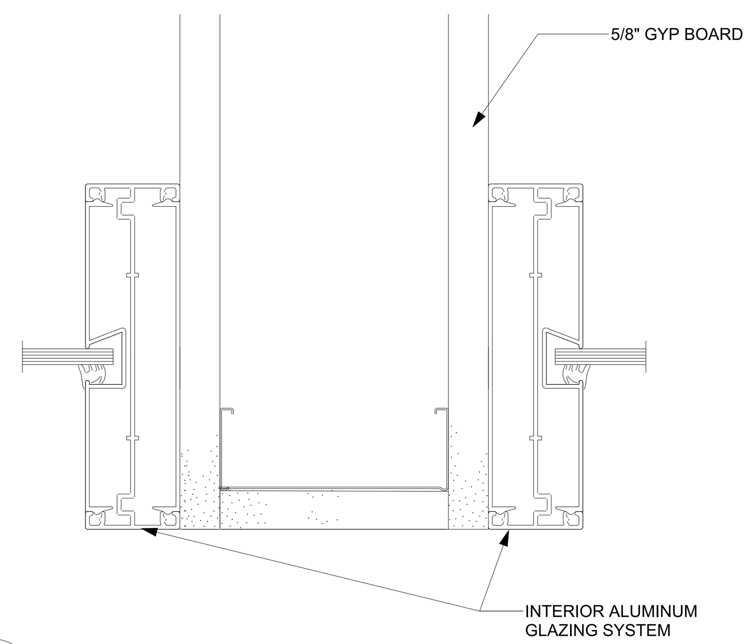

14 A621 PLAN DTL: END JAMB @ WINDOWS
SCALE : 6" = 1'-0"

BASIS OF DESIGN: RACO INTERIOR OFFICE FRONTS ALUMINUM FRAME SYSTEM

NOTE: ALL DETAILS ARE TO BE VERIFIED THRU SHOP DRAWING SUBMITTALS.

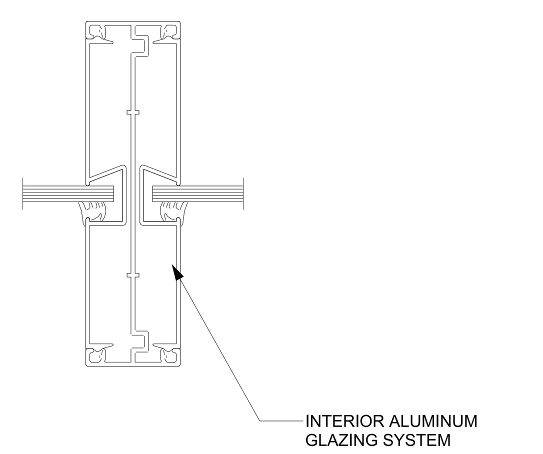

10 A621 PLAN DTL: MULLION BETWEEN WINDOWS
SCALE : 6" = 1'-0"

BASIS OF DESIGN: RACO INTERIOR OFFICE FRONTS ALUMINUM FRAME SYSTEM

NOTE: ALL DETAILS ARE TO BE VERIFIED THRU SHOP DRAWING SUBMITTALS.

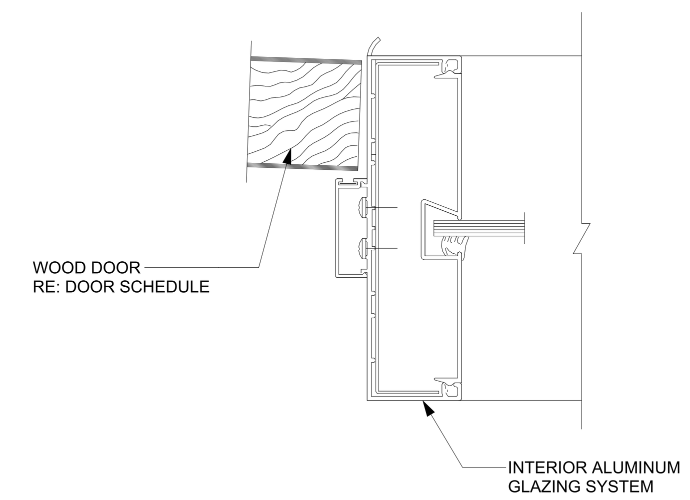

6 A621 PLAN DTL: JAMB @ DOOR & WINDOW
SCALE : 6" = 1'-0"

BASIS OF DESIGN: RACO INTERIOR OFFICE FRONTS ALUMINUM FRAME SYSTEM

NOTE: ALL DETAILS ARE TO BE VERIFIED THRU SHOP DRAWING SUBMITTALS.

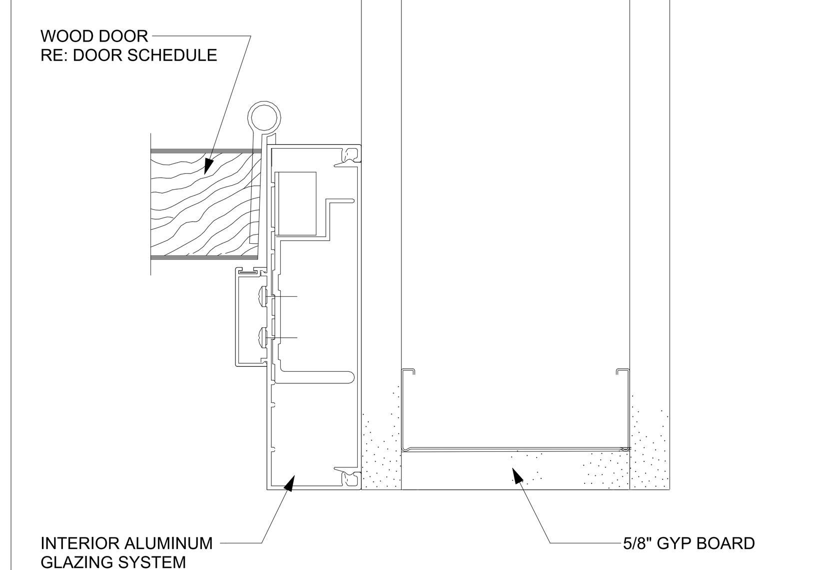

2 A621 PLAN DTL: JAMB @ DOOR HINGE
SCALE : 6" = 1'-0"

1

BASIS OF DESIGN: RACO INTERIOR OFFICE FRONTS ALUMINUM FRAME SYSTEM

NOTE: ALL DETAILS ARE TO BE VERIFIED THRU SHOP DRAWING SUBMITTALS.

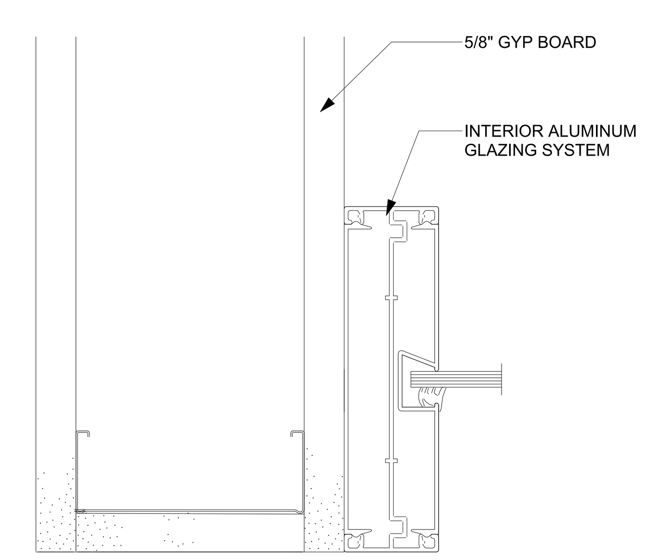

9 A621 PLAN DTL: END JAMB @ WINDOW
SCALE : 6" = 1'-0"

BASIS OF DESIGN: RACO INTERIOR OFFICE FRONTS ALUMINUM FRAME SYSTEM

NOTE: ALL DETAILS ARE TO BE VERIFIED THRU SHOP DRAWING SUBMITTALS.

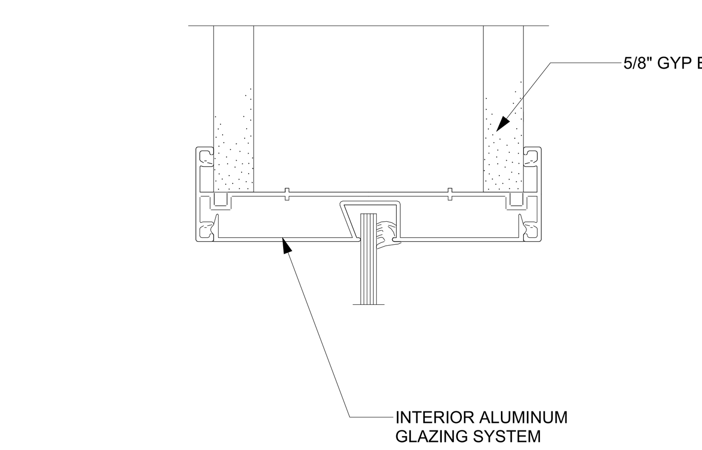

5 A621 SECT DTL: HEADER @ WINDOW
SCALE : 6" = 1'-0"

BASIS OF DESIGN: RACO INTERIOR OFFICE FRONTS ALUMINUM FRAME SYSTEM

NOTE: ALL DETAILS ARE TO BE VERIFIED THRU SHOP DRAWING SUBMITTALS.

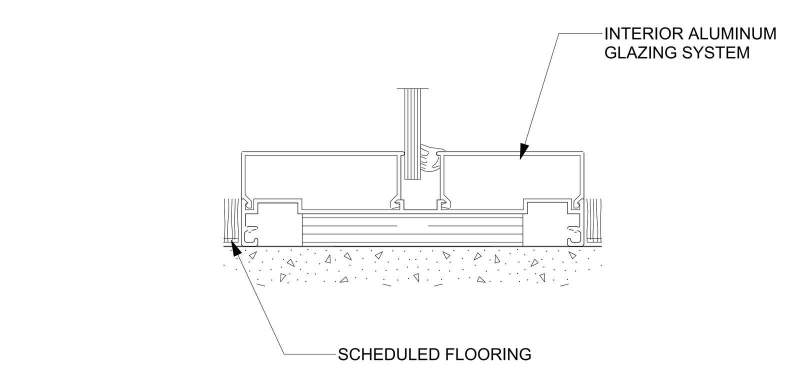

1 A621 SEC DTL: FLOOR SILL @ FULL HT WINDOW
SCALE : 6" = 1'-0"

E D C B A

PLOT DATE: 5/21/2024 5:17:25 PM
FILE PATH: Autodesk Docs://FBC IT Building/FBIT_A23.rvt

FSGROUP® ARCHITECTS
16575 Village Drive
Houston Texas 77040
713 344 1752 PH
fsdesignbuild.com

PROJECT NAME

INFORMATION TECHNOLGY BUILDING
1419 EUGENE HEIMANN CIRCLE
FORT BEND COUNTY . RICHMOND . TEXAS 77469

CONSULTANTS

PROFESSIONAL SEAL

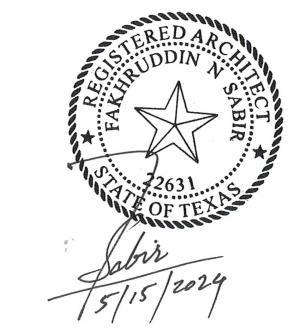

ISSUED FOR

ISSUED FOR PROPOSALS AND PERMIT

REVISIONS

No.	DESCRIPTION	DATE

KEY PLAN

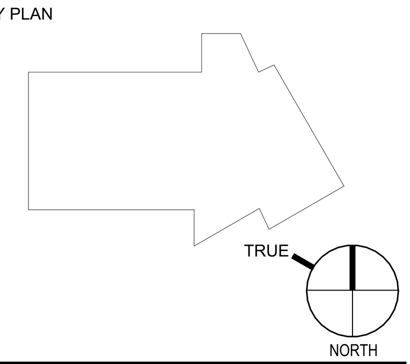

SHEET TITLE

WINDOW SCHEDULE INTERIOR TYPES & DETAILS

SCALE: As indicated

DATE: 05/15/2024

PROJECT NUMBER: 2319

SHEET NUMBER

A621

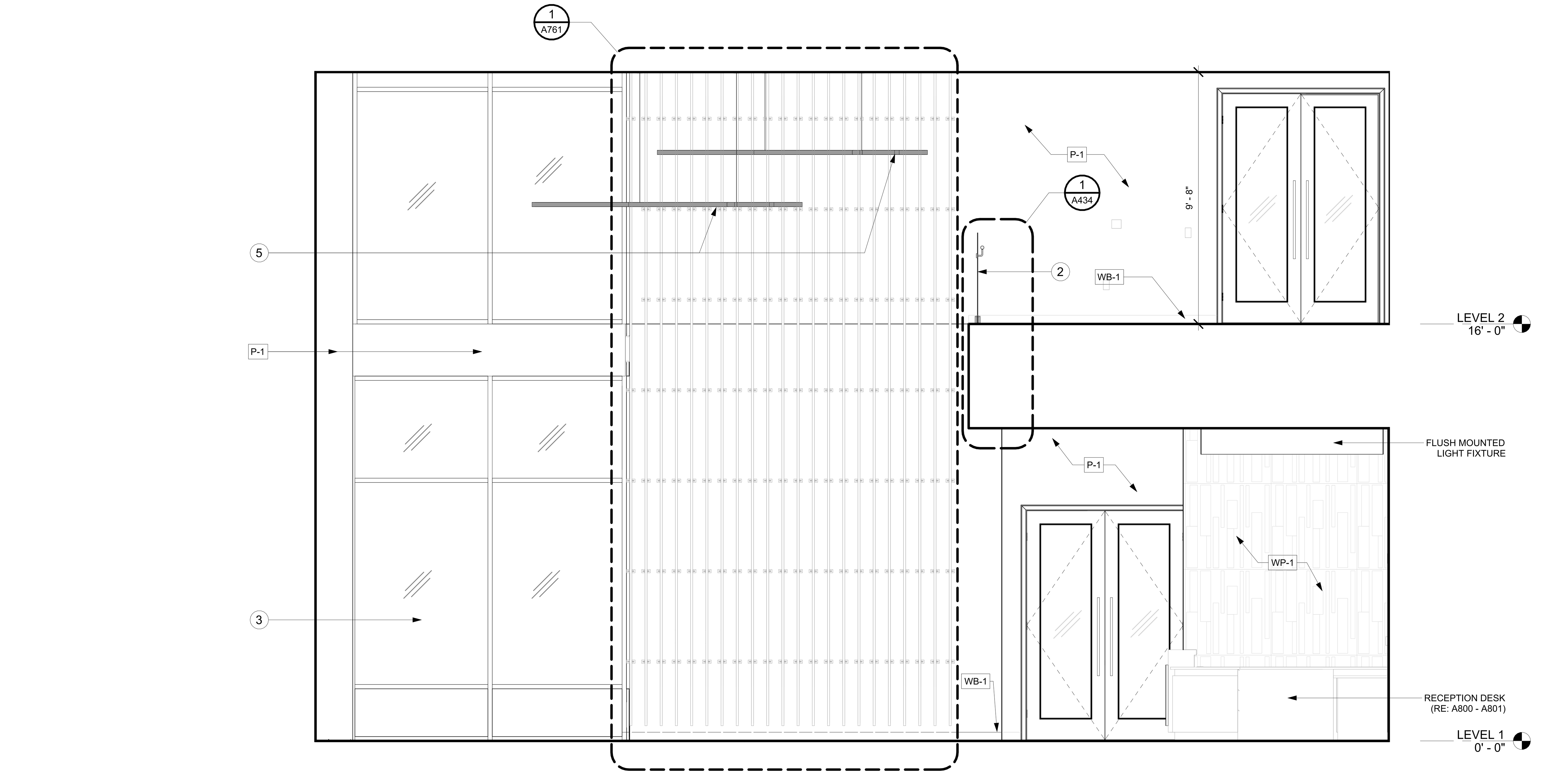

2
A700
INT ELEV: LOBBY 100 VIEW WEST
SCALE : 3/8" = 1'-0"

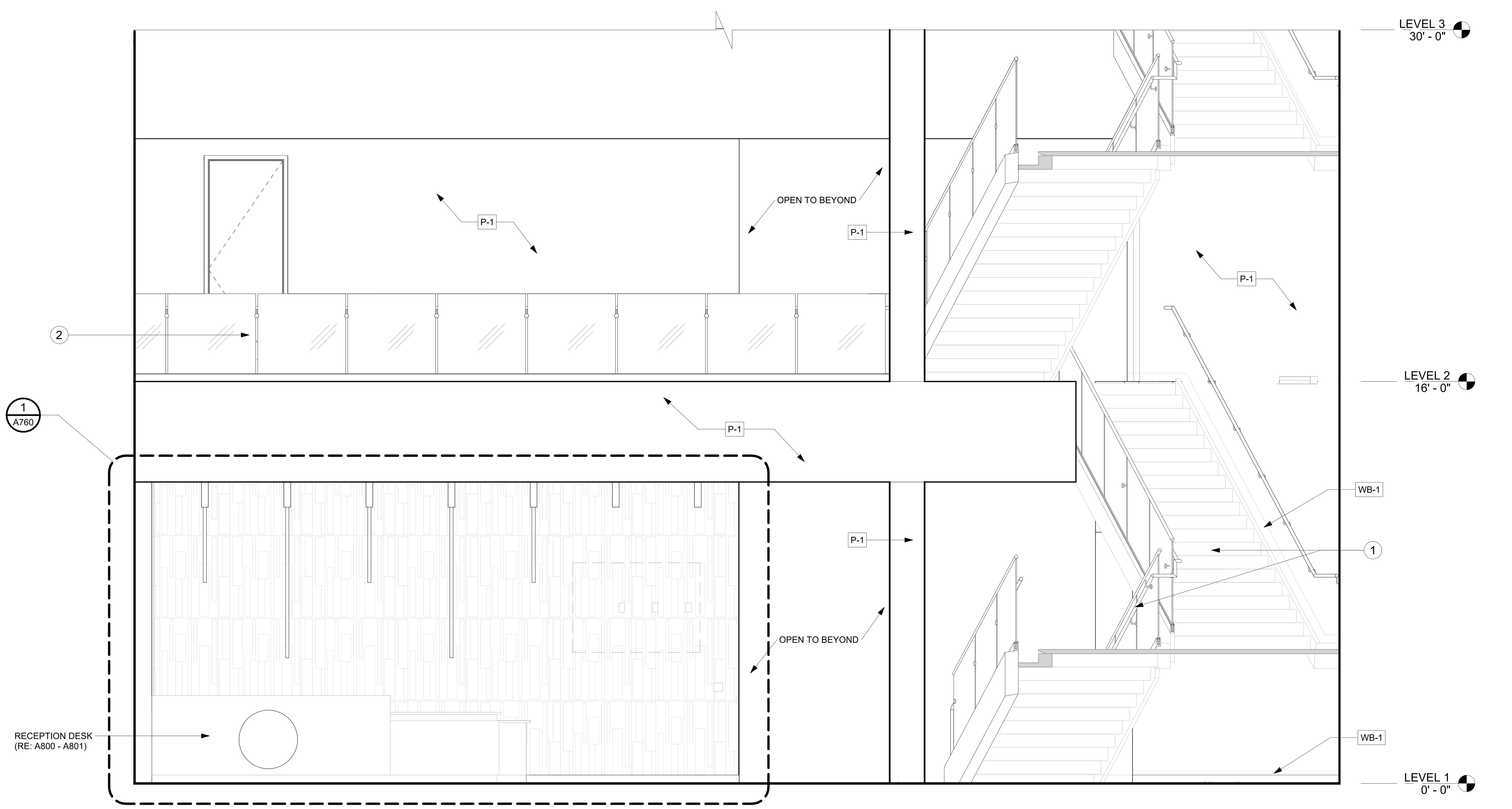

1
A700
INT ELEV: LOBBY 100 VIEW NORTH
SCALE : 3/8" = 1'-0"

PLOT DATE: 5/21/2024 5:17:50 PM
FILE PATH: Autodesk Docs://FBC IT Building/FBIT_A23.rvt

GENERAL NOTES: INTERIOR ELEVATIONS

A. THE GENERAL CONTRACTOR SHALL CONFIRM ALL DIMENSIONAL, ARCHITECTRUAL AND M.E.P. REQUIREMENTS AS CONFIGURED IN THESE DOCUMENTS.

B. ALL INTERIOR DIMENSIONS ARE MEASURED FROM FINISH FACE TO FINISH FACE UNLESS NOTED OTHERWISE. REFER TO THE ANNOTATION SYMBOL LEGEND AT SHEET G0.00 FOR TYPICAL DOOR PLACEMENT ON THE WALL THAT DOES NOT HAVE A DIMENSION PLACEMENT.

C. REFER TO FLOOR PLANS A110 THRU A112 AND REFLECTED CEILING PLANS A120 THRU A122 FOR ADDITIONAL INFORMATION.

D. FOR DOOR AND WINDOW TYPES REFER TO DOOR SCHEDULE (A600) AND WINDOW SCHEDULES (A610 THRU A620).

E. FOR PLUMBING FIXTURES REFER TO PLUMBING DRAWINGS.

F. FOR ROOM FINISHES REFER TO FINISH SCHEDULE (A900 - A901) AND FINISH PLANS (A910 THRU A912).

G. THE GENERAL CONTRACTOR IS TO NOTIFY ARCHITECT IF FLOOR PENETRATIONS CONFLICT WITH STRUCTURAL ELEMENTS, DUCTWORK, ETC. PRIOR TO PROCEEDING WITH WORK.

H. CLOSE ALL JOINTS BETWEEN PLUMBING FIXTURES, ACCESSORIES AND DISSIMILAR MATERIALS WITH SEALANT (I.E. SINKS AND ACCESSORIES TO WALL).

I. PARTITIONS:
   - FOR PARTITION TYPE DETAILS REFER TO SHEET A950.
   - DO NOT SCALE DRAWINGS, DIMENSIONS GOVERNING. DIMENSIONS ARE TO FACE OF FINSIHED PARTITION UNLESS NOTED OTHERWISE (GYPSUM BOARD SURFACE, NOT THE STUD).
   - GYPSUM BOARD ABOVE THE CEILING TO BE TAPED AND FLOATED ONLY.
   - INSTALL WATER RESISTANT GYPSUM BOARD (5/8") AT ALL PLUMBING CHASES.
   - PROVIDE BRACING ABOVE CEILING HEIGHT PARTITIONS WHEN LONG UNBRACED WALL LENGTHS OCCUR, AND AT ALL DOOR AND GLAZED OPENING JAMBS IN ACCORDANCE WITH MANUFACTURER'S SPECIFICATIONS.

J. THE GENERAL CONTRACTOR IS RESPONSIBLE FOR BRACING AND BLOCKING OF WALLS RECEIVING MILLWORK, SHELVING, EQUIPMENT, ETC. ALL WOOD BLOCKING, GROUNDS, ROUGH BUCKS AND MISCELLANEOUS BLOCKING IS TO BE FIRE-RETARDANT TREATED.

K. THE GENERAL CONTRACTOR SHALL CONFIRM ALL OWNER FURNISHED OWNER INSTALLED (O.F.O.I.) AND OWNER FURNISHED CONTRACTOR INSTALLED (O.F.C.I.) ITEMS WITH THE ARCHITECT AND THE OWNER PRIOR TO CONTRACTION.

KEY NOTES: INTERIOR ELEVATIONS 1

1 STAIR 1
2 GLASS GUARDRAIL
3 CURTAINWALL SYSTEM
4 ALUMINUM FRAME SYSTEM
5 PENDANT LIGHT FIXTURE
6 ACOUSTIC PANELS

FSGROUP® ARCHITECTS
16575 Village Drive
Houston Texas 77040
713 344 1752 PH
fsdesignbuild.com

PROJECT NAME

THE STATE OF TEXAS
FORT BEND COUNTY

INFORMATION TECHNOLGY BUILDING
1419 EUGENE HEIMANN CIRCLE
FORT BEND COUNTY , RICHMOND , TEXAS 77469

CONSULTANTS

PROFESSIONAL SEAL

REGISTERED ARCHITECT
FAKHRUDDIN N. SABIR
22631
STATE OF TEXAS
5/15/2024

ISSUED FOR
ISSUED FOR PROPOSALS AND PERMIT

REVISIONS

No.	DESCRIPTION	DATE

KEY PLAN

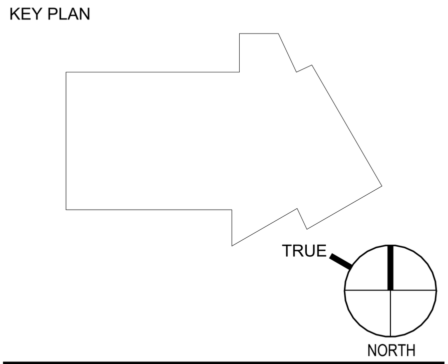

SHEET TITLE
INTERIOR ELEVATIONS LOBBY 100

SCALE
As indicated

DATE
05/15/2024

PROJECT NUMBER
2319

SHEET NUMBER
A700

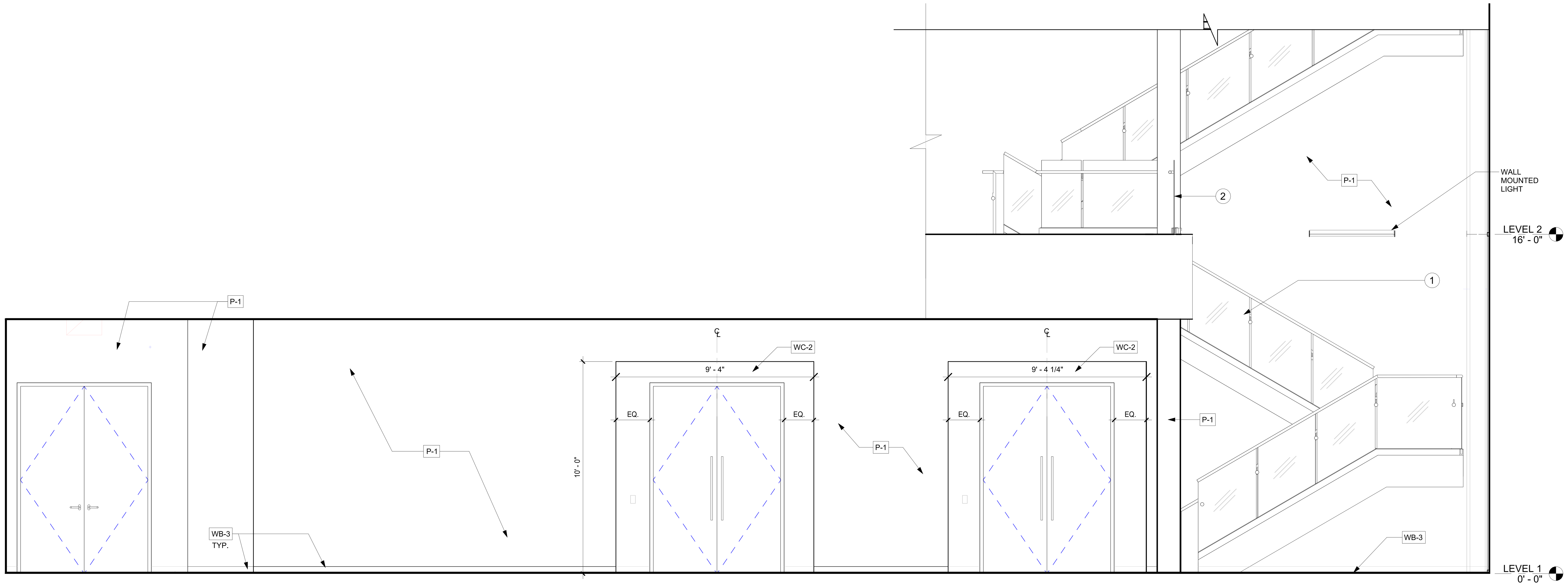

2 A701 INT ELEV: LOBBY 100 VIEW EAST
SCALE : 3/8" = 1'-0"

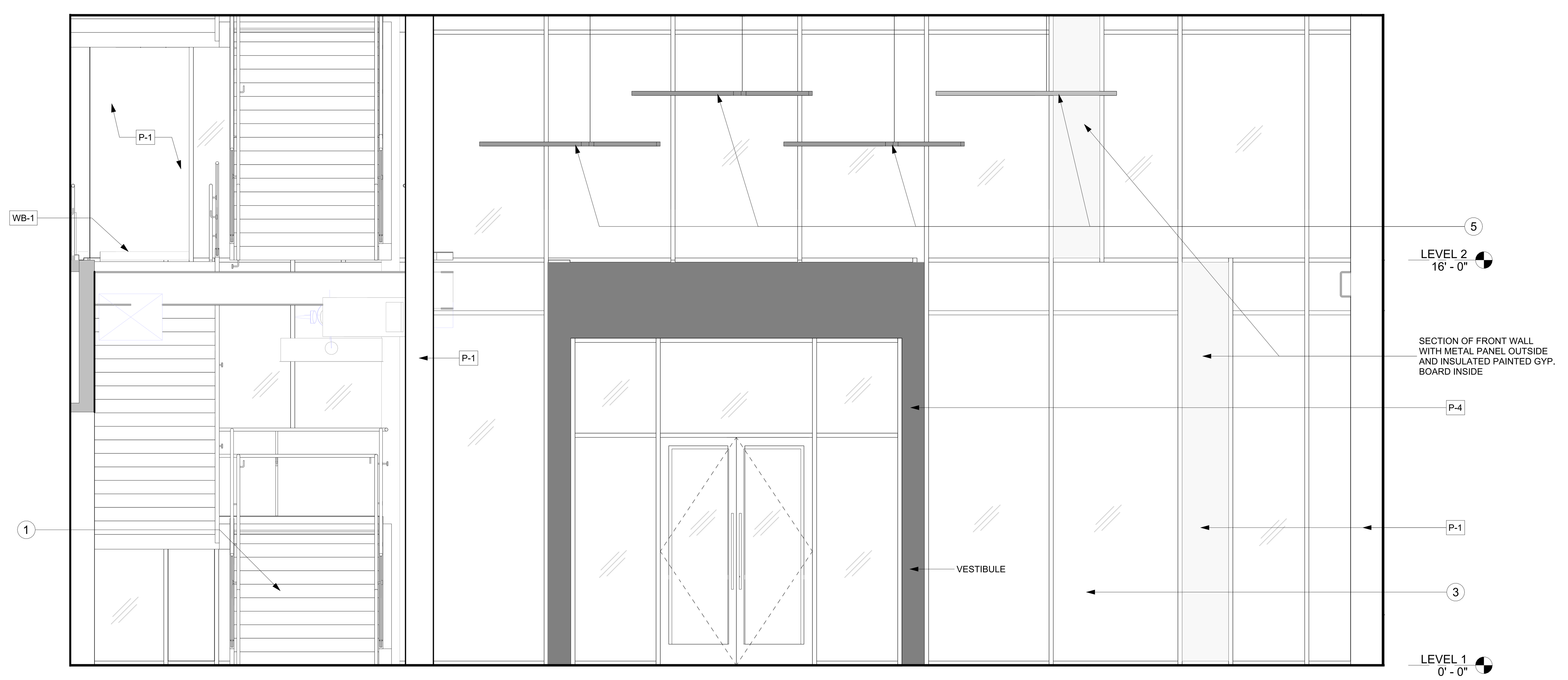

1 A701 INT ELEV: LOBBY 100 VIEW SOUTH
SCALE : 3/8" = 1'-0"

GENERAL NOTES: INTERIOR ELEVATIONS

A. THE GENERAL CONTRACTOR SHALL CONFIRM ALL DIMENSIONAL, ARCHITECTRUAL AND M.E.P. REQUIREMENTS AS CONFIGURED IN THESE DOCUMENTS.

B. ALL INTERIOR DIMENSIONS ARE MEASURED FROM FINISH FACE TO FINISH FACE UNLESS NOTED OTHERWISE. REFER TO THE ANNOTATION SYMBOL LEGEND AT SHEET G0.00 FOR TYPICAL DOOR PLACEMENT ON THE WALL THAT DOES NOT HAVE A DIMENSION PLACEMENT.

C. REFER TO FLOOR PLANS A110 THRU A112 AND REFLECTED CEILING PLANS A120 THRU A122 FOR ADDITIONAL INFORMATION.

D. FOR DOOR AND WINDOW TYPES REFER TO DOOR SCHEDULE (A600) AND WINDOW SCHEDULES (A610 THRU A620).

E. FOR PLUMBING FIXTURES REFER TO PLUMBING DRAWINGS.

F. FOR ROOM FINISHES REFER TO FINISH SCHEDULE (A900 - A901) AND FINISH PLANS (A910 THRU A912).

G. THE GENERAL CONTRACTOR IS TO NOTIFY ARCHITECT IF FLOOR PENETRATIONS CONFLICT WITH STRUCTURAL ELEMENTS, DUCTWORK, ETC. PRIOR TO PROCEEDING WITH WORK.

H. CLOSE ALL JOINTS BETWEEN PLUMBING FIXTURES, ACCESSORIES AND DISSIMILAR MATERIALS WITH SEALANT (I.E. SINKS AND ACCESSORIES TO WALL).

I. PARTITIONS:

- FOR PARTITION TYPE DETAILS REFER TO SHEET A950.
- DO NOT SCALE DRAWINGS, DIMENSIONS GOVERNING. DIMENSIONS ARE TO FACE OF FINSIHED PARTITION UNLESS NOTED OTHERWISE (GYPSUM BOARD SURFACE, NOT THE STUD).
- GYPSUM BOARD ABOVE THE CEILING TO BE TAPED AND FLOATED ONLY.
- INSTALL WATER RESISTANT GYPSUM BOARD (5/8") AT ALL PLUMBING CHASES.
- PROVIDE BRACING ABOVE CEILING HEIGHT PARTITIONS WHEN LONG UNBRACED WALL LENGTHS OCCUR, AND AT ALL DOOR AND GLAZED OPENING JAMBS IN ACCORDANCE WITH MANUFACTURER'S SPECIFICATIONS.

J. THE GENERAL CONTRACTOR IS RESPONSIBLE FOR BRACING AND BLOCKING OF WALLS RECEIVING MILLWORK, SHELVING, EQUIPMENT, ETC. ALL WOOD BLOCKING, GROUNDS, ROUGH BUCKS AND MISCELLANEOUS BLOCKING IS TO BE FIRE-RETARDANT TREATED.

K. THE GENERAL CONTRACTOR SHALL CONFIRM ALL OWNER FURNISHED OWNER INSTALLED (O.F.O.I.) AND OWNER FURNISHED CONTRACTOR INSTALLED (O.F.C.I.) ITEMS WITH THE ARCHITECT AND THE OWNER PRIOR TO CONTRACTION.

KEY NOTES: INTERIOR ELEVATIONS

1 STAIR 1
2 GLASS GUARDRAIL
3 CURTAINWALL SYSTEM
4 ALUMINUM FRAME SYSTEM
5 PENDANT LIGHT FIXTURE
6 ACOUSTIC PANELS

FSGROUP ARCHITECTS
16575 Village Drive
Houston Texas 77040
713 344 1752 PH
fsdesignbuild.com

PROJECT NAME

THE STATE OF TEXAS
FORT BEND COUNTY

INFORMATION TECHNOLGY BUILDING
1419 EUGENE HEIMANN CIRCLE
FORT BEND COUNTY , RICHMOND , TEXAS 77469

CONSULTANTS

PROFESSIONAL SEAL

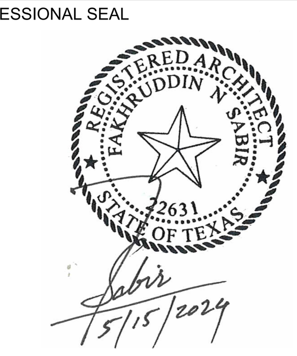

ISSUED FOR
ISSUED FOR PROPOSALS AND PERMIT

REVISIONS

No.	DESCRIPTION	DATE

KEY PLAN

TRUE
NORTH

SHEET TITLE
INTERIOR ELEVATIONS LOBBY 100

SCALE
As indicated

DATE
05/15/2024

PROJECT NUMBER
2319

SHEET NUMBER
A701

PLOT DATE: 5/21/2024 5:18:14 PM
FILE PATH: Autodesk Docs://FBC IT Building/FBIT_A23.rvt

GENERAL NOTES: INTERIOR ELEVATIONS

A. THE GENERAL CONTRACTOR SHALL CONFIRM ALL DIMENSIONAL, ARCHITECTRUAL AND M.E.P. REQUIREMENTS AS CONFIGURED IN THESE DOCUMENTS.

B. ALL INTERIOR DIMENSIONS ARE MEASURED FROM FINISH FACE TO FINISH FACE UNLESS NOTED OTHERWISE. REFER TO THE ANNOTATION SYMBOL LEGEND AT SHEET G0.00 FOR TYPICAL DOOR PLACEMENT ON THE WALL THAT DOES NOT HAVE A DIMENSION PLACEMENT.

C. REFER TO FLOOR PLANS A110 THRU A112 AND REFLECTED CEILING PLANS A120 THRU A122 FOR ADDITIONAL INFORMATION.

D. FOR DOOR AND WINDOW TYPES REFER TO DOOR SCHEDULE (A600) AND WINDOW SCHEDULES (A610 THRU A620).

E. FOR PLUMBING FIXTURES REFER TO PLUMBING DRAWINGS.

F. FOR ROOM FINISHES REFER TO FINISH SCHEDULE (A900 - A901) AND FINISH PLANS (A910 THRU A912).

G. THE GENERAL CONTRACTOR IS TO NOTIFY ARCHITECT IF FLOOR PENETRATIONS CONFLICT WITH STRUCTURAL ELEMENTS, DUCTWORK, ETC. PRIOR TO PROCEEDING WITH WORK.

H. CLOSE ALL JOINTS BETWEEN PLUMBING FIXTURES, ACCESSORIES AND DISSIMILAR MATERIALS WITH SEALANT (I.E. SINKS AND ACCESSORIES TO WALL).

I. PARTITIONS:
- FOR PARTITION TYPE DETAILS REFER TO SHEET A950.
- DO NOT SCALE DRAWINGS, DIMENSIONS GOVERNING. DIMENSIONS ARE TO FACE OF FINISHED PARTITION UNLESS NOTED OTHERWISE (GYPSUM BOARD SURFACE, NOT THE STUD).
- GYPSUM BOARD ABOVE THE CEILING TO BE TAPED AND FLOATED ONLY.
- INSTALL WATER RESISTANT GYPSUM BOARD (5/8") AT ALL PLUMBING CHASES.
- PROVIDE BRACING ABOVE CEILING HEIGHT PARTITIONS WHEN LONG UNBRACED WALL LENGTHS OCCUR, AND AT ALL DOOR AND GLAZED OPENING JAMBS IN ACCORDANCE WITH MANUFACTURER'S SPECIFICATIONS.

J. THE GENERAL CONTRACTOR IS RESPONSIBLE FOR BRACING AND BLOCKING OF WALLS RECEIVING MILLWORK, SHELVING, EQUIPMENT, ETC. ALL WOOD BLOCKING, GROUNDS, ROUGH BUCKS AND MISCELLANEOUS BLOCKING IS TO BE FIRE-RETARDANT TREATED.

K. THE GENERAL CONTRACTOR SHALL CONFIRM ALL OWNER FURNISHED OWNER INSTALLED (O.F.O.I.) AND OWNER FURNISHED CONTRACTOR INSTALLED (O.F.C.I.) ITEMS WITH THE ARCHITECT AND THE OWNER PRIOR TO CONTRACTION.

KEY NOTES: INTERIOR ELEVATIONS 1

1 STAIR 1
2 GLASS GUARDRAIL
3 CURTAINWALL SYSTEM
4 ALUMINUM FRAME SYSTEM
5 PENDANT LIGHT FIXTURE
6 ACOUSTIC PANELS

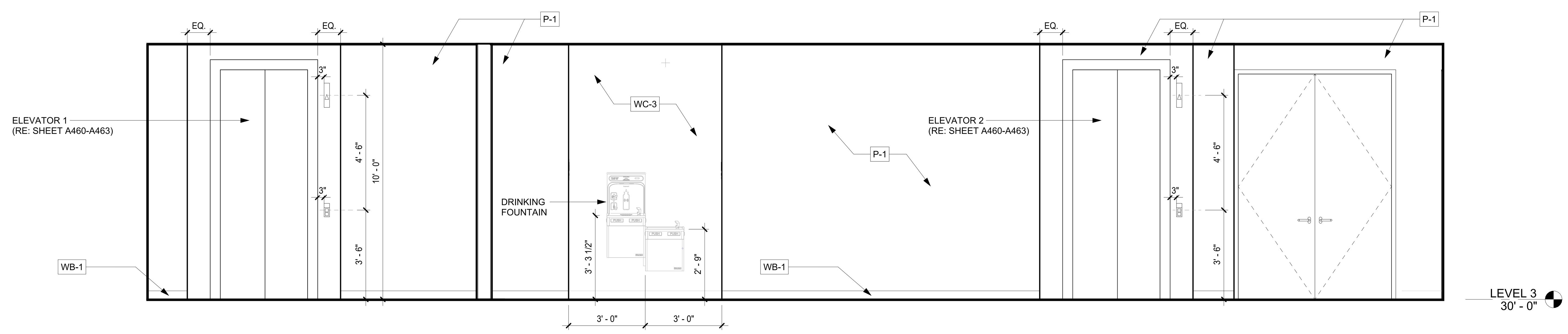

3
A702
INT ELEV: LOBBY 300 VIEW WEST TOWARDS ELEVATORS
SCALE : 3/8" = 1'-0"

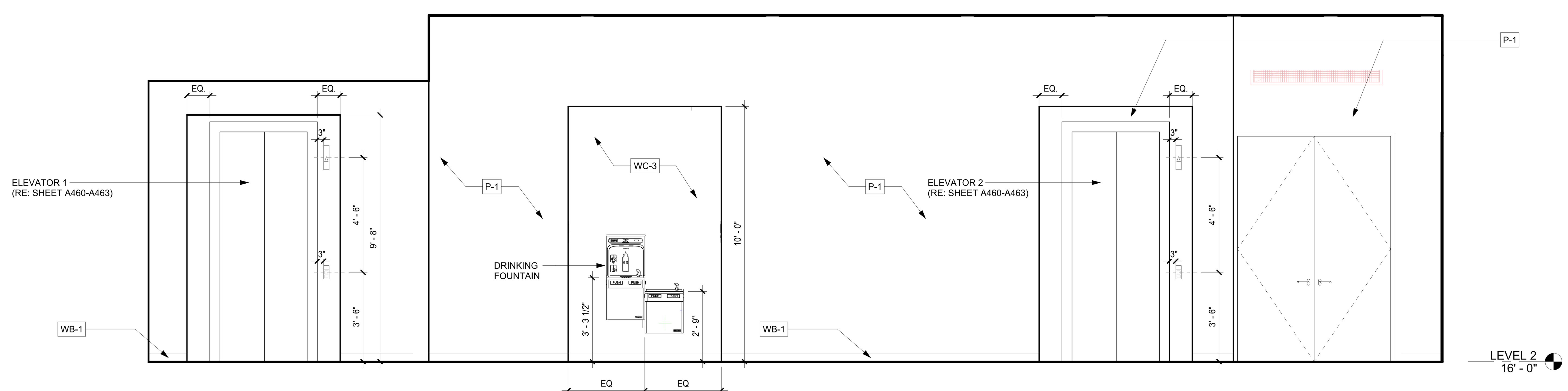

2
A702
INT ELEV: LOBBY 200 VIEW WEST TOWARDS ELEVATORS
SCALE : 3/8" = 1'-0"

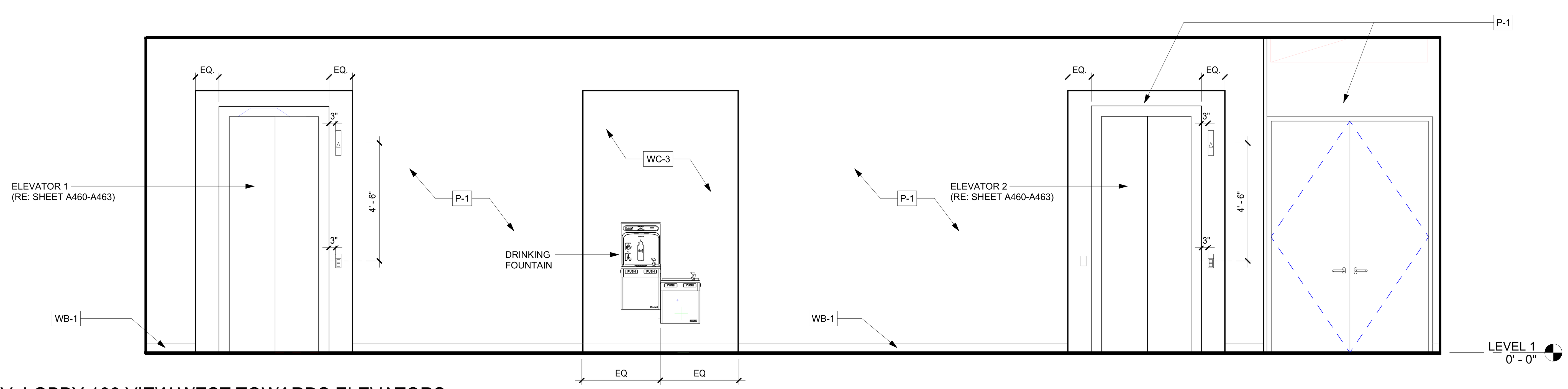

1
A702
INT ELEV: LOBBY 100 VIEW WEST TOWARDS ELEVATORS
SCALE : 3/8" = 1'-0"

FILE PATH: Autodesk Docs://FBC IT Building/FBIT_A23.rvt
PLOT DATE: 5/22/2024 2:21:21 PM

FSGROUP®
ARCHITECTS
16575 Village Drive
Houston Texas 77040
713 344 1752 PH
fsdesignbuild.com

PROJECT NAME

INFORMATION TECHNOLGY BUILDING
1419 EUGENE HEIMANN CIRCLE
FORT BEND COUNTY . RICHMOND . TEXAS 77469

CONSULTANTS

PROFESSIONAL SEAL

ISSUED FOR
ISSUED FOR PROPOSALS AND PERMIT

REVISIONS

No.	DESCRIPTION	DATE

KEY PLAN

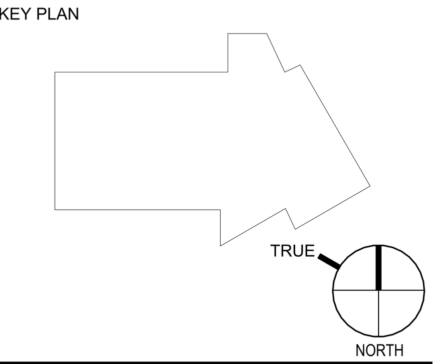

SHEET TITLE
INTERIOR ELEVATIONS LOBBY 100, 200 & 300

SCALE
As indicated

DATE
05/15/2024

PROJECT NUMBER
2319

SHEET NUMBER
A702

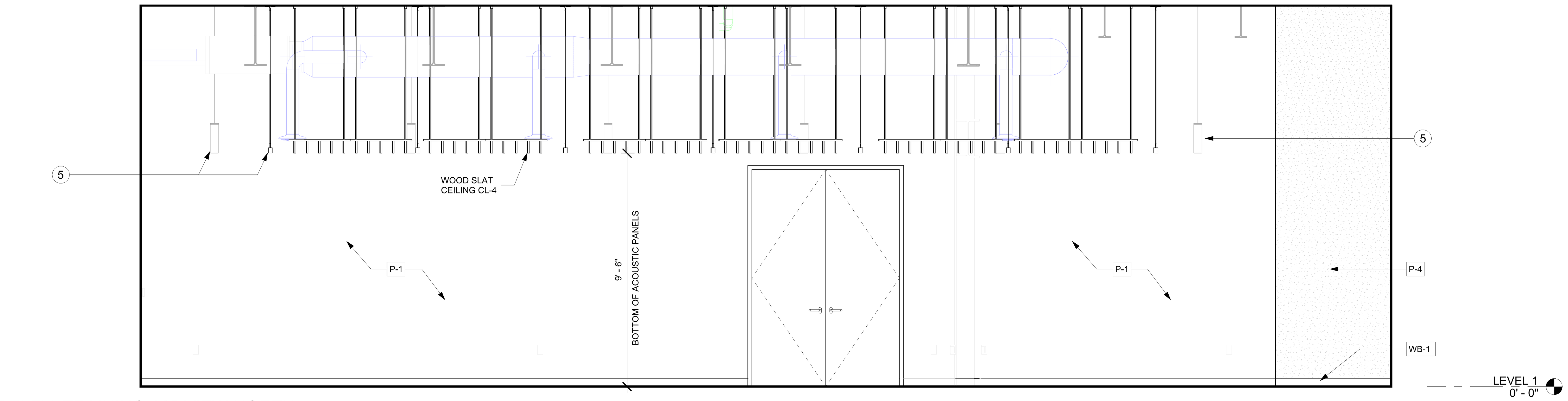

4
A710
INT ELEV: TRAINING 102 VIEW NORTH
SCALE : 3/8" = 1'-0"

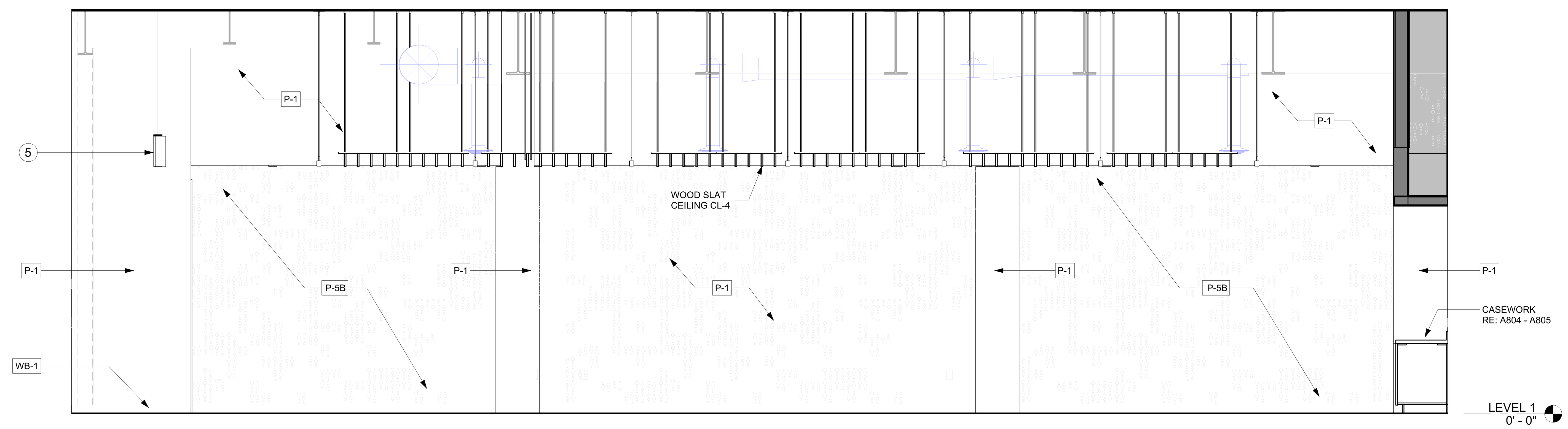

3
A710
INT ELEV: TRAINING 102 VIEW SOUTH
SCALE : 3/8" = 1'-0"

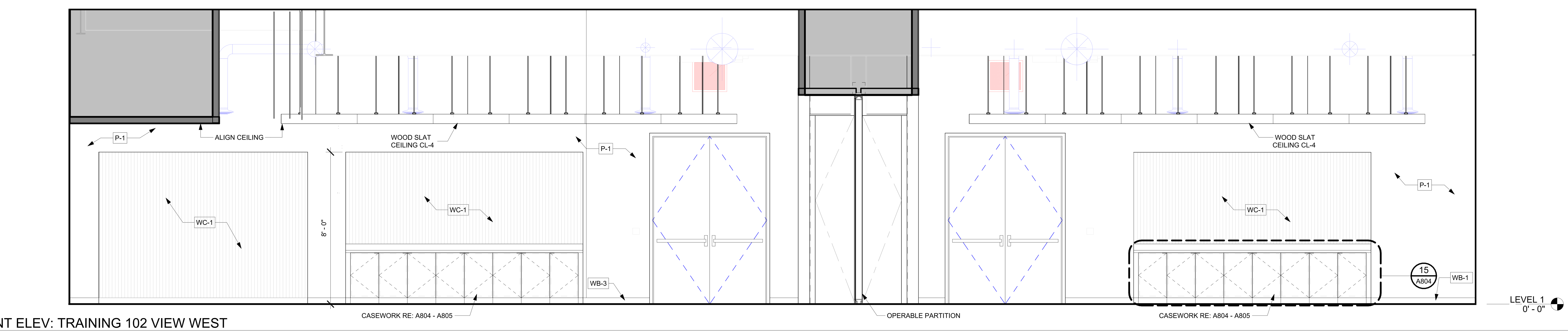

2
A710
INT ELEV: TRAINING 102 VIEW WEST
SCALE : 3/8" = 1'-0"

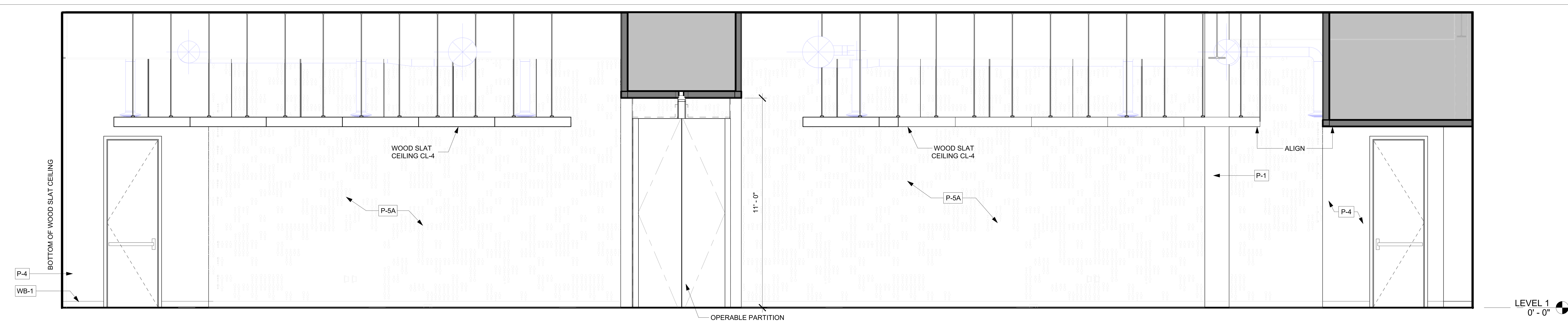

1
A710
INT ELEV: TRAINING 102 VIEW EAST
SCALE : 3/8" = 1'-0"

GENERAL NOTES: INTERIOR ELEVATIONS

A. THE GENERAL CONTRACTOR SHALL CONFIRM ALL DIMENSIONAL, ARCHITECTRUAL AND M.E.P. REQUIREMENTS AS CONFIGURED IN THESE DOCUMENTS.

B. ALL INTERIOR DIMENSIONS ARE MEASURED FROM FINISH FACE TO FINISH FACE UNLESS NOTED OTHERWISE. REFER TO THE ANNOTATION SYMBOL LEGEND AT SHEET G0.00 FOR TYPICAL DOOR PLACEMENT ON THE WALL THAT DOES NOT HAVE A DIMENSION PLACEMENT.

C. REFER TO FLOOR PLANS A110 THRU A112 AND REFLECTED CEILING PLANS A120 THRU A122 FOR ADDITIONAL INFORMATION.

D. FOR DOOR AND WINDOW TYPES REFER TO DOOR SCHEDULE (A600) AND WINDOW SCHEDULES (A610 THRU A620).

E. FOR PLUMBING FIXTURES REFER TO PLUMBING DRAWINGS.

F. FOR ROOM FINISHES REFER TO FINISH SCHEDULE (A900 - A901) AND FINISH PLANS (A910 THRU A912).

G. THE GENERAL CONTRACTOR IS TO NOTIFY ARCHITECT IF FLOOR PENETRATIONS CONFLICT WITH STRUCTURAL ELEMENTS, DUCTWORK, ETC. PRIOR TO PROCEEDING WITH WORK.

H. CLOSE ALL JOINTS BETWEEN PLUMBING FIXTURES, ACCESSORIES AND DISSIMILAR MATERIALS WITH SEALANT (I.E. SINKS AND ACCESSORIES TO WALL).

I. PARTITIONS:

- FOR PARTITION TYPE DETAILS REFER TO SHEET A950.
- DO NOT SCALE DRAWINGS, DIMENSIONS GOVERNING. DIMENSIONS ARE TO FACE OF FINSIHED PARTITION UNLESS NOTED OTHERWISE (GYPSUM BOARD SURFACE, NOT THE STUD).
- GYPSUM BOARD ABOVE THE CEILING TO BE TAPED AND FLOATED ONLY.
- INSTALL WATER RESISTANT GYPSUM BOARD (5/8") AT ALL PLUMBING CHASES.
- PROVIDE BRACING ABOVE CEILING HEIGHT PARTITIONS WHEN LONG UNBRACED WALL LENGTHS OCCUR, AND AT ALL DOOR AND GLAZED OPENING JAMBS IN ACCORDANCE WITH MANUFACTURER'S SPECIFICATIONS.

J. THE GENERAL CONTRACTOR IS RESPONSIBLE FOR BRACING AND BLOCKING OF WALLS RECEIVING MILLWORK, SHELVING, EQUIPMENT, ETC. ALL WOOD BLOCKING, GROUNDS, ROUGH BUCKS AND MISCELLANEOUS BLOCKING IS TO BE FIRE-RETARDANT TREATED.

K. THE GENERAL CONTRACTOR SHALL CONFIRM ALL OWNER FURNISHED OWNER INSTALLED (O.F.O.I.) AND OWNER FURNISHED CONTRACTOR INSTALLED (O.F.C.I.) ITEMS WITH THE ARCHITECT AND THE OWNER PRIOR TO CONTRACTION.

KEY NOTES: INTERIOR ELEVATIONS 1

1 STAIR 1
2 GLASS GUARDRAIL
3 CURTAINWALL SYSTEM
4 ALUMINUM FRAME SYSTEM
5 PENDANT LIGHT FIXTURE
6 ACOUSTIC PANELS

FSGROUP®
ARCHITECTS
16575 Village Drive
Houston Texas 77040
713 344 1752 PH
fsdesignbuild.com

PROJECT NAME

THE STATE OF TEXAS
FORT BEND COUNTY

INFORMATION TECHNOLGY BUILDING
1419 EUGENE HEIMANN CIRCLE
FORT BEND COUNTY , RICHMOND , TEXAS 77469

CONSULTANTS

PROFESSIONAL SEAL

REGISTERED ARCHITECT
FAKHRUDDIN N. SABIR
22631
STATE OF TEXAS
5/15/2024

ISSUED FOR
ISSUED FOR PROPOSALS AND PERMIT

REVISIONS

No.	DESCRIPTION	DATE

KEY PLAN

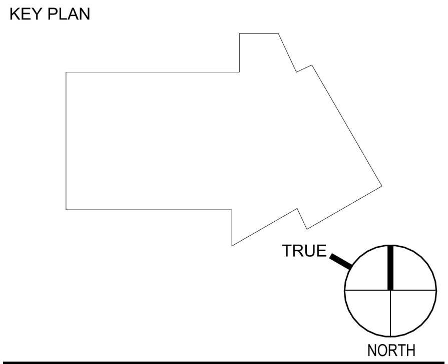

SHEET TITLE
INTERIOR ELEVATIONS TRAINING ROOM 102

SCALE
As indicated

DATE
05/15/2024

PROJECT NUMBER
2319

SHEET NUMBER
A710

PLOT DATE: 5/21/2024 5:19:58 PM
FILE PATH: Autodesk Docs://FBC IT Building/FBIT_A23.rvt

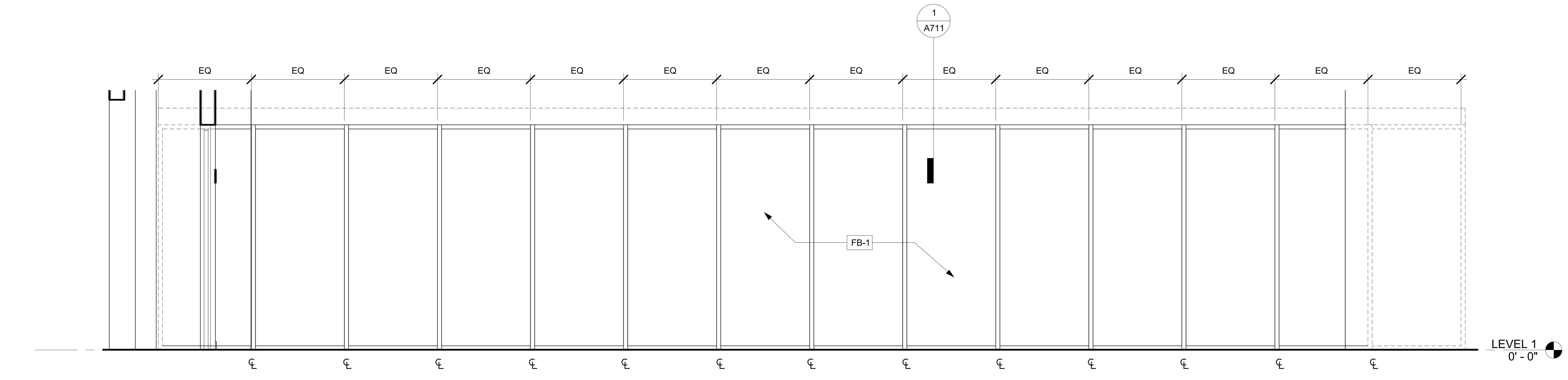

11
A711
ELEVATION: OPERABLE PARTITION
SCALE : 3/8" = 1'-0"

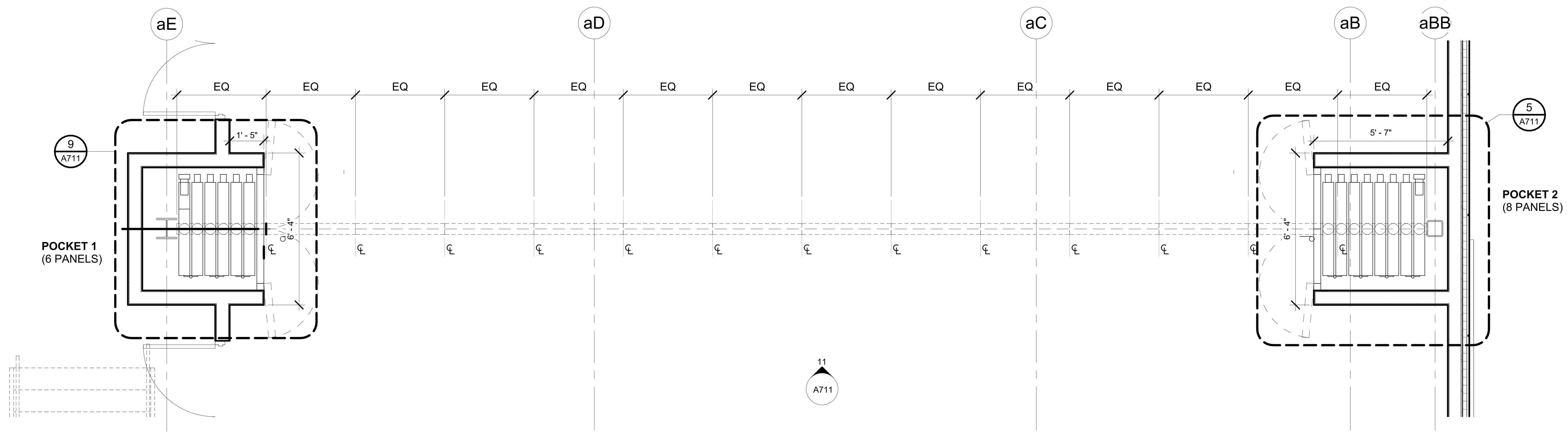

12
A711
ENLG PLAN: OPERABLE PARTITION
SCALE : 3/8" = 1'-0"

BASIS OF DESIGN:

PANELFOLD
MODUFLEX SERIES 600
DOUBLE DOOR

FINISH:

- PRODUCT TYPE: TEK-WALL 1002
- PRODUCT SIZE: 54" WIDTH
- ORIENTATION: REFER TO DRAWINGS
- COLOR NAME: HERITAGE
- PRODUCT NUMBER: 399594-013
- MANUFACTURER: MAHARAM
- LOCATION: TRAINING ROOM PANELFOLD

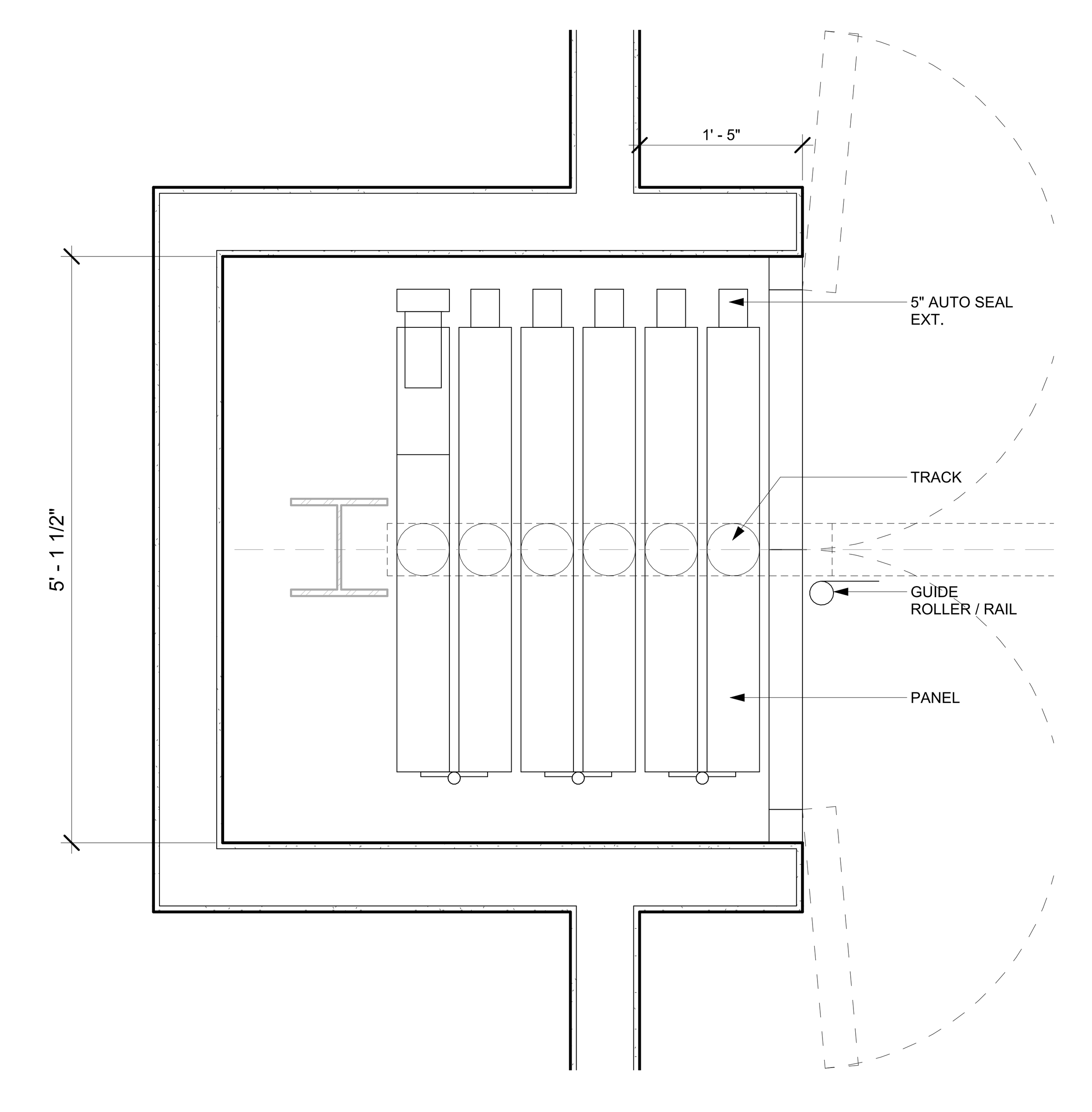

9
A711
ENLG PLAN: WEST CLOSET FOR PARTITION PANELS
SCALE : 1" = 1'-0"

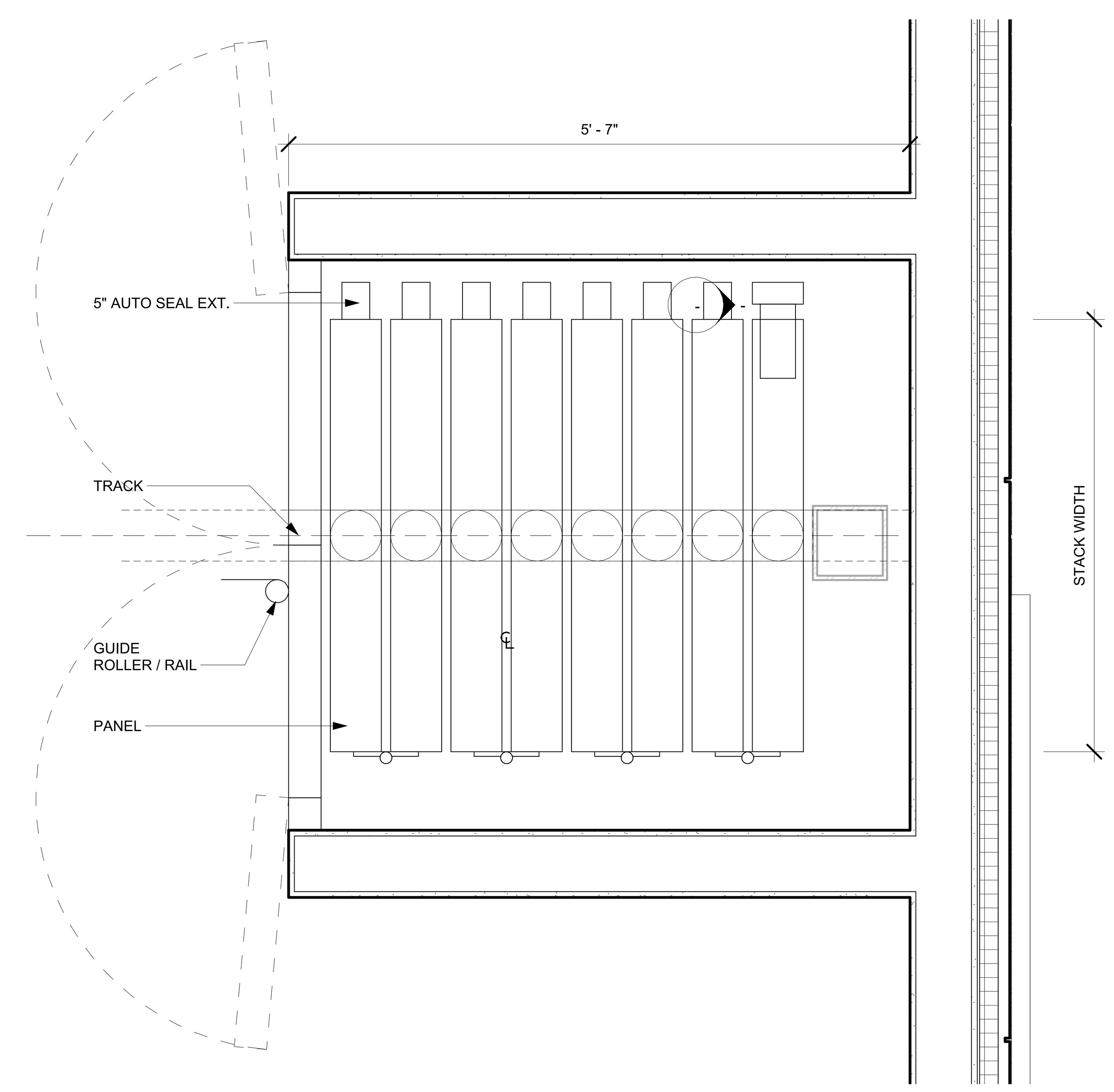

5
A711
ENLG PLAN: EAST CLOSET FOR PARTITION PANELS
SCALE : 1" = 1'-0"

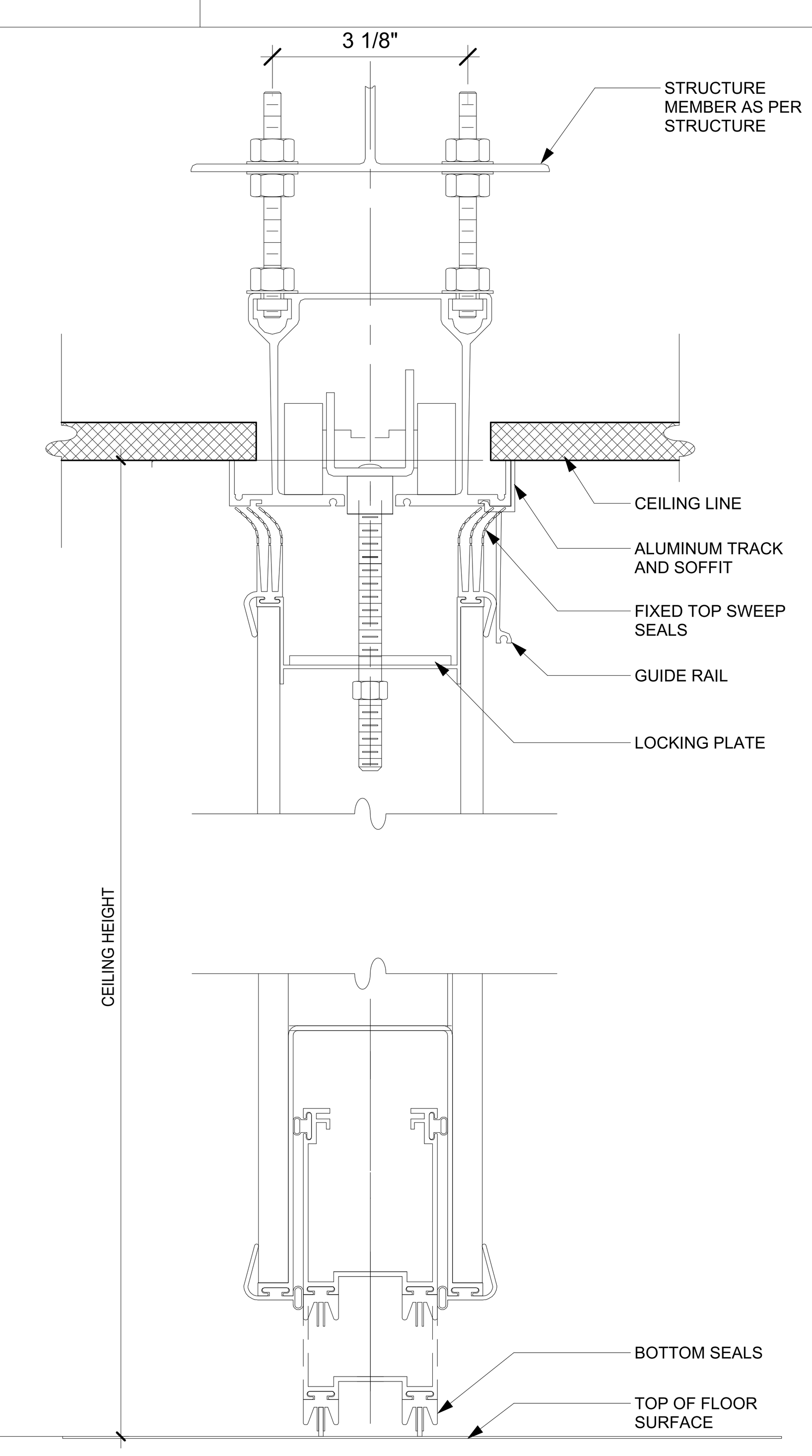

1
A711
CHANNEL TRACK HANGER ROD SUSPENSION DETAIL
SCALE : 6" = 1'-0"

FSGROUP®
ARCHITECTS
16575 Village Drive
Houston Texas 77040
713 344 1752 PH
fsdesignbuild.com

PROJECT NAME

INFORMATION TECHNOLGY BUILDING
1419 EUGENE HEIMANN CIRCLE
FORT BEND COUNTY . RICHMOND . TEXAS 77469

CONSULTANTS

PROFESSIONAL SEAL

ISSUED FOR
ISSUED FOR PROPOSALS AND PERMIT

REVISIONS

No.	DESCRIPTION	DATE

KEY PLAN

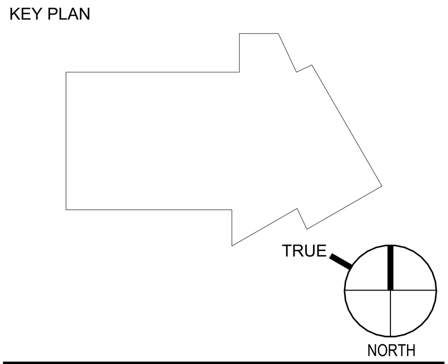

SHEET TITLE
OPERABLE PARTITION DETAILS

SCALE: As indicated
DATE: 05/15/2024
PROJECT NUMBER: 2319
SHEET NUMBER
A711

FILE PATH: Autodesk Docs://FBC IT Building/FBIT_A23.rvt
PLOT DATE: 5/21/2024 5:20:21 PM

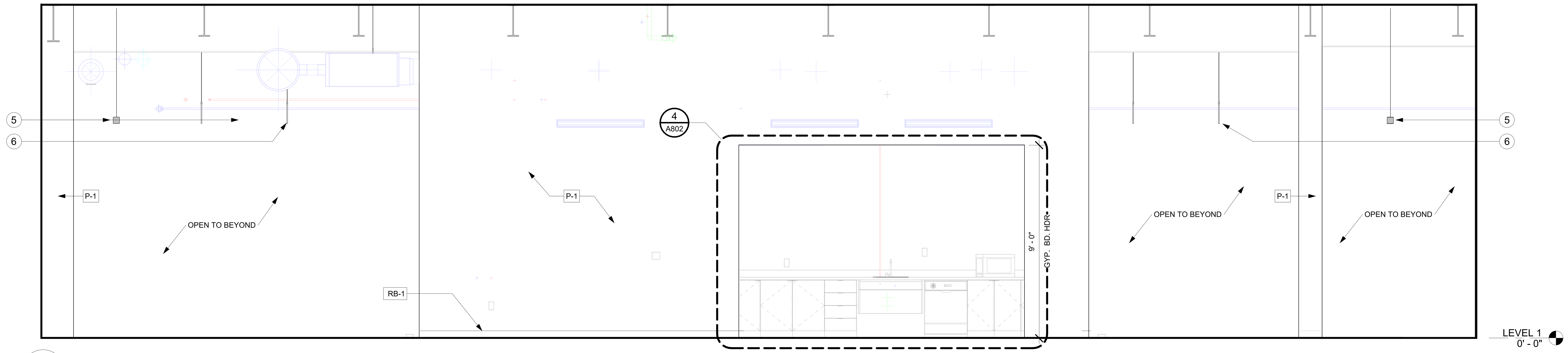

4
A720
INT ELEV: BULLPEN 120 VIEW EAST
SCALE : 3/8" = 1'-0"

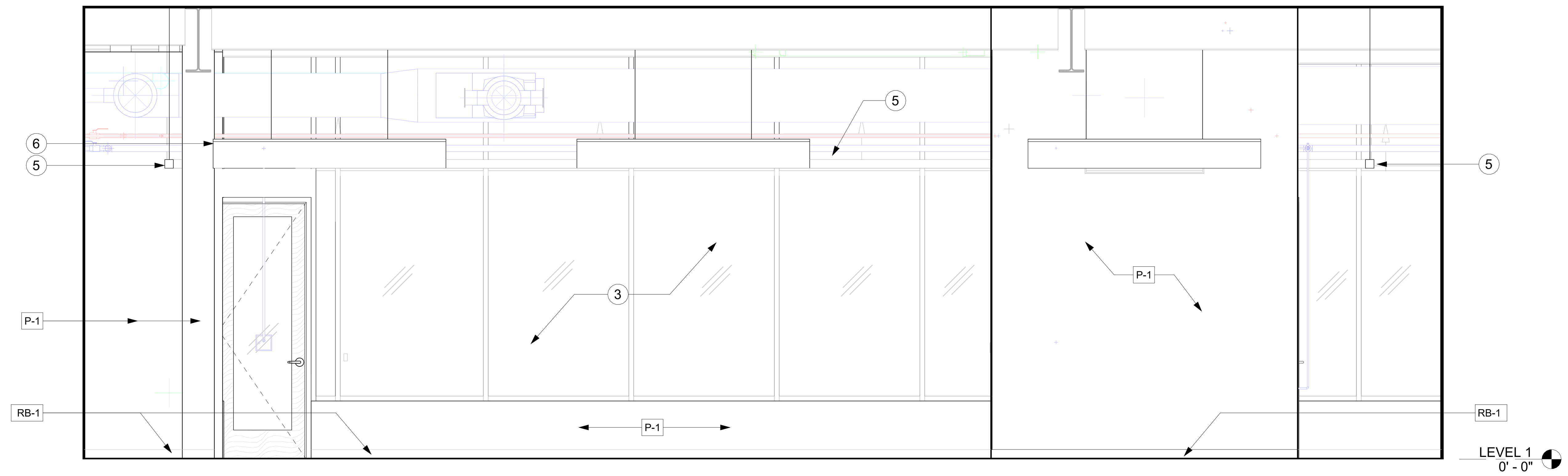

3
A720
INT ELEV: BULLPEN 120 VIEW NORTH
SCALE : 3/8" = 1'-0"

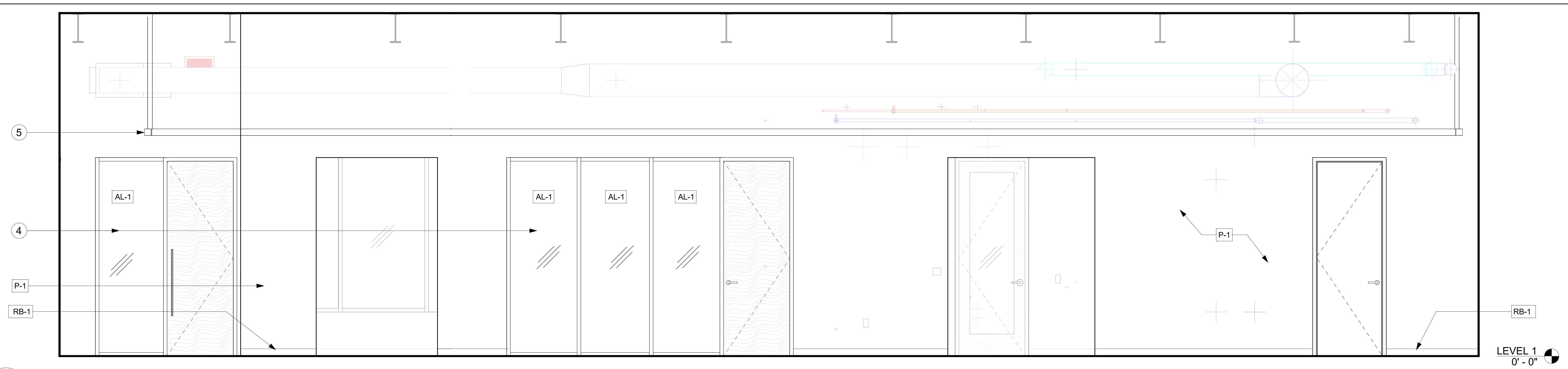

2
A720
INT ELEV: BULLPEN 120 VIEW WEST
SCALE : 3/8" = 1'-0"

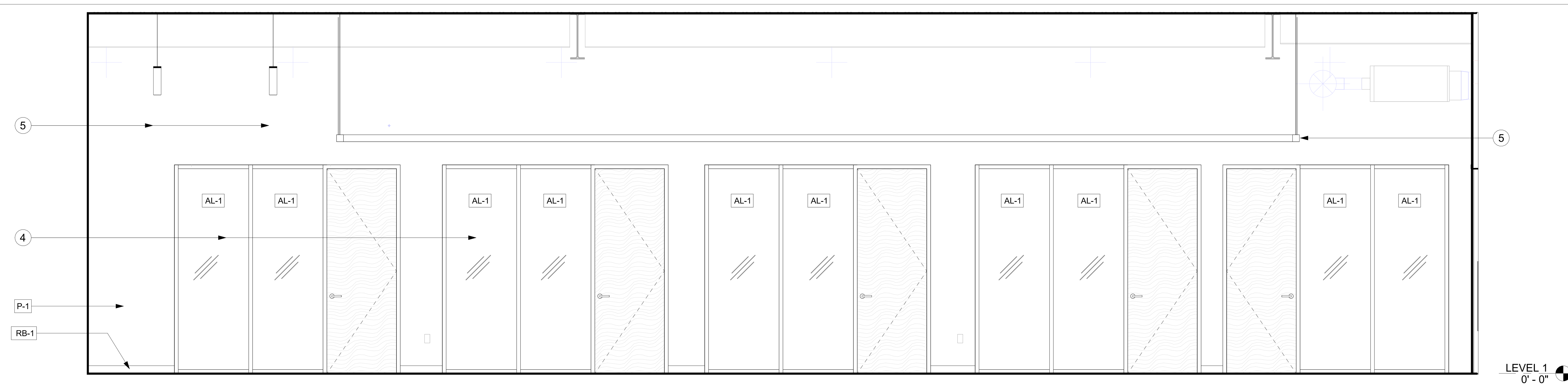

1
A720
INT ELEV: BULLPEN 120 VIEW SOUTH
SCALE : 3/8" = 1'-0"

GENERAL NOTES: INTERIOR ELEVATIONS

A. THE GENERAL CONTRACTOR SHALL CONFIRM ALL DIMENSIONAL, ARCHITECTRUAL AND M.E.P. REQUIREMENTS AS CONFIGURED IN THESE DOCUMENTS.

B. ALL INTERIOR DIMENSIONS ARE MEASURED FROM FINISH FACE TO FINISH FACE UNLESS NOTED OTHERWISE. REFER TO THE ANNOTATION SYMBOL LEGEND AT SHEET G0.00 FOR TYPICAL DOOR PLACEMENT ON THE WALL THAT DOES NOT HAVE A DIMENSION PLACEMENT.

C. REFER TO FLOOR PLANS A110 THRU A112 AND REFLECTED CEILING PLANS A120 THRU A122 FOR ADDITIONAL INFORMATION.

D. FOR DOOR AND WINDOW TYPES REFER TO DOOR SCHEDULE (A600) AND WINDOW SCHEDULES (A610 THRU A620).

E. FOR PLUMBING FIXTURES REFER TO PLUMBING DRAWINGS.

F. FOR ROOM FINISHES REFER TO FINISH SCHEDULE (A900 - A901) AND FINISH PLANS (A910 THRU A912).

G. THE GENERAL CONTRACTOR IS TO NOTIFY ARCHITECT IF FLOOR PENETRATIONS CONFLICT WITH STRUCTURAL ELEMENTS, DUCTWORK, ETC. PRIOR TO PROCEEDING WITH WORK.

H. CLOSE ALL JOINTS BETWEEN PLUMBING FIXTURES, ACCESSORIES AND DISSIMILAR MATERIALS WITH SEALANT (I.E. SINKS AND ACCESSORIES TO WALL).

I. PARTITIONS:

- FOR PARTITION TYPE DETAILS REFER TO SHEET A950.
- DO NOT SCALE DRAWINGS, DIMENSIONS GOVERNING. DIMENSIONS ARE TO FACE OF FINSIHED PARTITION UNLESS NOTED OTHERWISE (GYPSUM BOARD SURFACE, NOT THE STUD).
- GYPSUM BOARD ABOVE THE CEILING TO BE TAPED AND FLOATED ONLY.
- INSTALL WATER RESISTANT GYPSUM BOARD (5/8") AT ALL PLUMBING CHASES.
- PROVIDE BRACING ABOVE CEILING HEIGHT PARTITIONS WHEN LONG UNBRACED WALL LENGTHS OCCUR, AND AT ALL DOOR AND GLAZED OPENING JAMBS IN ACCORDANCE WITH MANUFACTURER'S SPECIFICATIONS.

J. THE GENERAL CONTRACTOR IS RESPONSIBLE FOR BRACING AND BLOCKING OF WALLS RECEIVING MILLWORK, SHELVING, EQUIPMENT, ETC. ALL WOOD BLOCKING, GROUNDS, ROUGH BUCKS AND MISCELLANEOUS BLOCKING IS TO BE FIRE-RETARDANT TREATED.

K. THE GENERAL CONTRACTOR SHALL CONFIRM ALL OWNER FURNISHED OWNER INSTALLED (O.F.O.I.) AND OWNER FURNISHED CONTRACTOR INSTALLED (O.F.C.I.) ITEMS WITH THE ARCHITECT AND THE OWNER PRIOR TO CONTRACTION.

KEY NOTES: INTERIOR ELEVATIONS (1)

1 STAIR 1
2 GLASS GUARDRAIL
3 CURTAINWALL SYSTEM
4 ALUMINUM FRAME SYSTEM
5 PENDANT LIGHT FIXTURE
6 ACOUSTIC PANELS

FSGROUP® ARCHITECTS
16575 Village Drive
Houston Texas 77040
713 344 1752 PH
fsdesignbuild.com

PROJECT NAME

INFORMATION TECHNOLGY BUILDING
EUGENE HEIMANN CIRCLE
FORT BEND COUNTY . RICHMOND . TEXAS

CONSULTANTS

PROFESSIONAL SEAL

INTERIM REVIEW
FOR INTERIM REVIEW ONLY. DOCUMENTS MAY BE INCOMPLETE. THIS DOCUMENT MAY NOT BE USED FOR REGULATORY APPROVAL, PERMITTING OR CONSTRUCTION.

ISSUED FOR
ISSUED FOR PROPOSALS AND PERMIT

REVISIONS

No.	DESCRIPTION	DATE

KEY PLAN

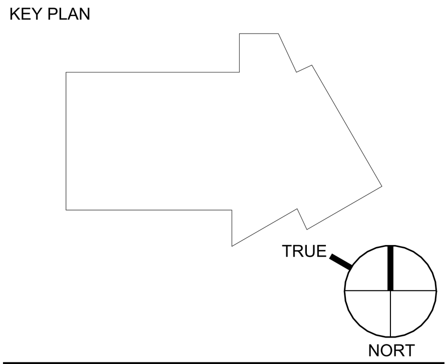

SHEET TITLE
INTERIOR ELEVATIONS LEVEL 1 BULLPEN 120

SCALE
As indicated

DATE
05/15/2024

PROJECT NUMBER
2319

SHEET NUMBER
A720

FILE PATH: Autodesk Docs://FBC IT Building/FBIT_A23.rvt
PLOT DATE: 5/21/2024 5:20:40 PM

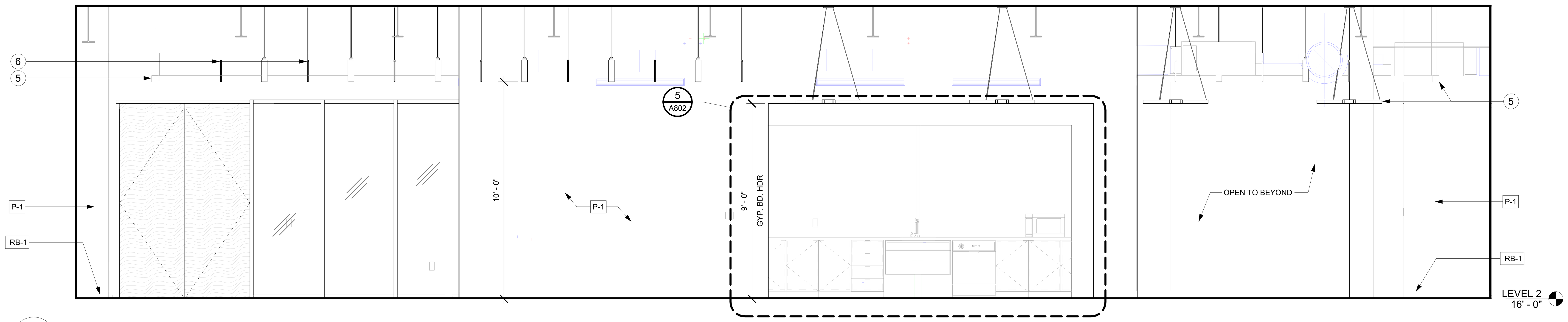

4
A730
INT ELEV: BULLPEN 220 VIEW EAST
SCALE : 3/8" = 1'-0"

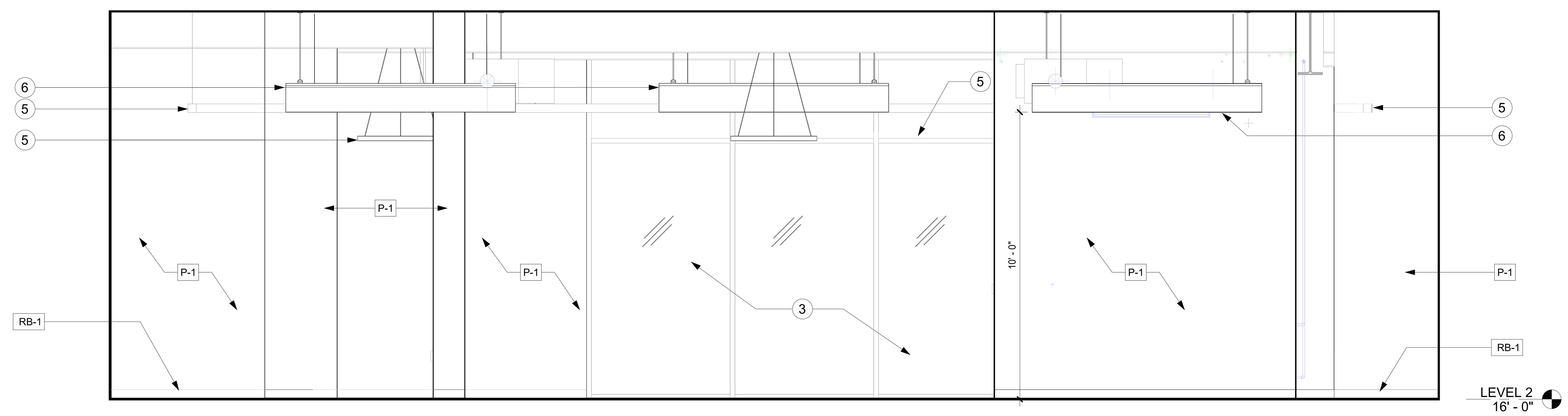

3
A730
INT ELEV: BULLPEN 220 VIEW NORTH
SCALE : 3/8" = 1'-0"

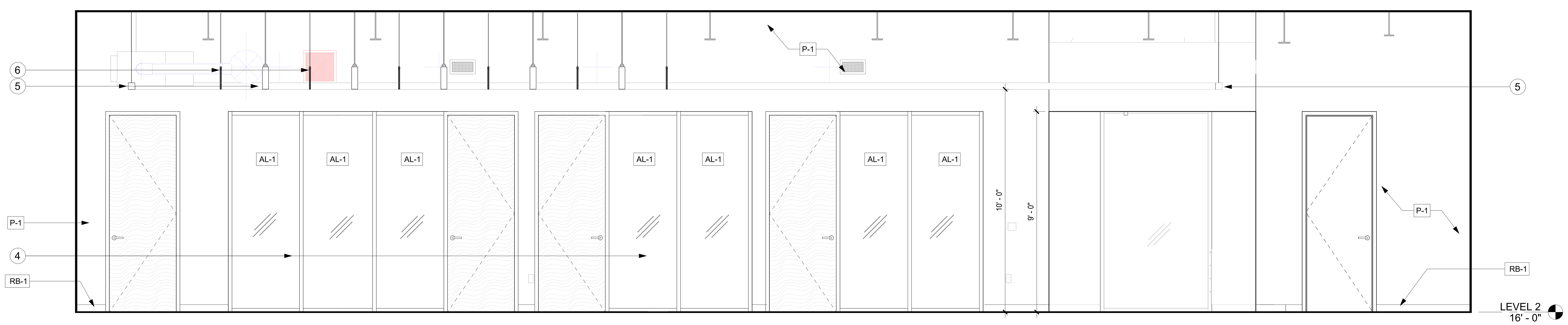

2
A730
INT ELEV: BULLPEN 220 VIEW WEST
SCALE : 3/8" = 1'-0"

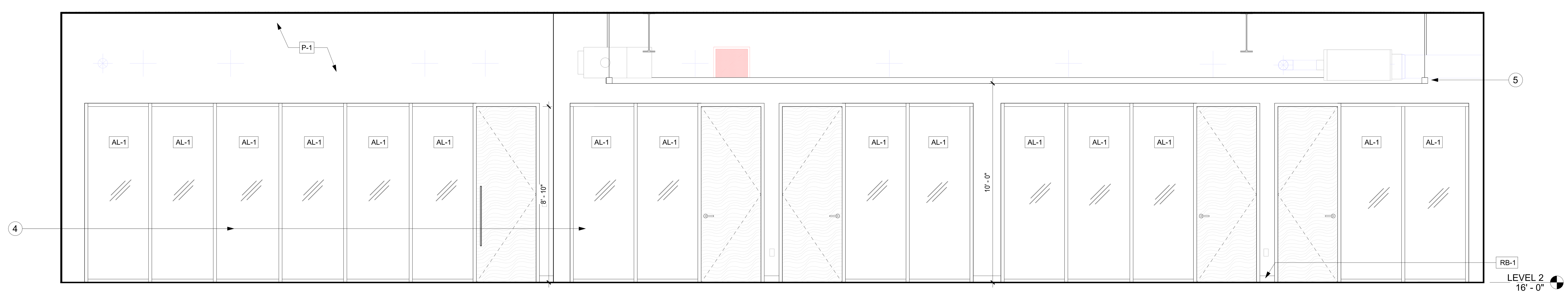

1
A730
INT ELEV: BULLPEN 220 VIEW SOUTH
SCALE : 3/8" = 1'-0"

GENERAL NOTES: INTERIOR ELEVATIONS

A. THE GENERAL CONTRACTOR SHALL CONFIRM ALL DIMENSIONAL, ARCHITECTRUAL AND M.E.P. REQUIREMENTS AS CONFIGURED IN THESE DOCUMENTS.

B. ALL INTERIOR DIMENSIONS ARE MEASURED FROM FINISH FACE TO FINISH FACE UNLESS NOTED OTHERWISE. REFER TO THE ANNOTATION SYMBOL LEGEND AT SHEET G0.00 FOR TYPICAL DOOR PLACEMENT ON THE WALL THAT DOES NOT HAVE A DIMENSION PLACEMENT.

C. REFER TO FLOOR PLANS A110 THRU A112 AND REFLECTED CEILING PLANS A120 THRU A122 FOR ADDITIONAL INFORMATION.

D. FOR DOOR AND WINDOW TYPES REFER TO DOOR SCHEDULE (A600) AND WINDOW SCHEDULES (A610 THRU A620).

E. FOR PLUMBING FIXTURES REFER TO PLUMBING DRAWINGS.

F. FOR ROOM FINISHES REFER TO FINISH SCHEDULE (A900 - A901) AND FINISH PLANS (A910 THRU A912).

G. THE GENERAL CONTRACTOR IS TO NOTIFY ARCHITECT IF FLOOR PENETRATIONS CONFLICT WITH STRUCTURAL ELEMENTS, DUCTWORK, ETC. PRIOR TO PROCEEDING WITH WORK.

H. CLOSE ALL JOINTS BETWEEN PLUMBING FIXTURES, ACCESSORIES AND DISSIMILAR MATERIALS WITH SEALANT (I.E. SINKS AND ACCESSORIES TO WALL).

I. PARTITIONS:

- FOR PARTITION TYPE DETAILS REFER TO SHEET A950.
- DO NOT SCALE DRAWINGS, DIMENSIONS GOVERNING. DIMENSIONS ARE TO FACE OF FINSIHED PARTITION UNLESS NOTED OTHERWISE (GYPSUM BOARD SURFACE, NOT THE STUD).
- GYPSUM BOARD ABOVE THE CEILING TO BE TAPED AND FLOATED ONLY.
- INSTALL WATER RESISTANT GYPSUM BOARD (5/8") AT ALL PLUMBING CHASES.
- PROVIDE BRACING ABOVE CEILING HEIGHT PARTITIONS WHEN LONG UNBRACED WALL LENGTHS OCCUR, AND AT ALL DOOR AND GLAZED OPENING JAMBS IN ACCORDANCE WITH MANUFACTURER'S SPECIFICATIONS.

J. THE GENERAL CONTRACTOR IS RESPONSIBLE FOR BRACING AND BLOCKING OF WALLS RECEIVING MILLWORK, SHELVING, EQUIPMENT, ETC. ALL WOOD BLOCKING, GROUNDS, ROUGH BUCKS AND MISCELLANEOUS BLOCKING IS TO BE FIRE-RETARDANT TREATED.

K. THE GENERAL CONTRACTOR SHALL CONFIRM ALL OWNER FURNISHED OWNER INSTALLED (O.F.O.I.) AND OWNER FURNISHED CONTRACTOR INSTALLED (O.F.C.I.) ITEMS WITH THE ARCHITECT AND THE OWNER PRIOR TO CONTRACTION.

KEY NOTES: INTERIOR ELEVATIONS

1 STAIR 1
2 GLASS GUARDRAIL
3 CURTAINWALL SYSTEM
4 ALUMINUM FRAME SYSTEM
5 PENDANT LIGHT FIXTURE
6 ACOUSTIC PANELS

FSGROUP ARCHITECTS
16575 Village Drive
Houston Texas 77040
713 344 1752 PH
fsdesignbuild.com

PROJECT NAME

INFORMATION TECHNOLGY BUILDING
1419 EUGENE HEIMANN CIRCLE
FORT BEND COUNTY . RICHMOND . TEXAS 77469

CONSULTANTS

PROFESSIONAL SEAL

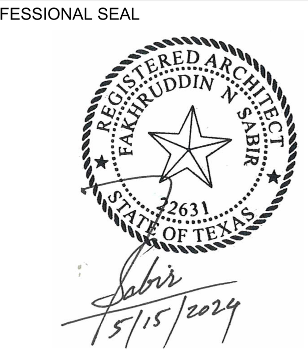

ISSUED FOR

ISSUED FOR PROPOSALS AND PERMIT

REVISIONS

No.	DESCRIPTION	DATE

KEY PLAN

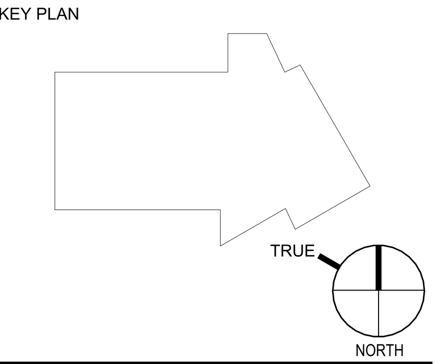

SHEET TITLE

INTERIOR ELEVATIONS LEVEL 2 BULLPEN 220

SCALE: As indicated

DATE: 05/15/2024

PROJECT NUMBER: 2319

SHEET NUMBER: A730

FILE PATH: Autodesk Docs://FBC IT Building/FBIT_A23.rvt
PLOT DATE: 5/21/2024 5:20:57 PM

GENERAL NOTES: INTERIOR ELEVATIONS

A. THE GENERAL CONTRACTOR SHALL CONFIRM ALL DIMENSIONAL, ARCHITECTRUAL AND M.E.P. REQUIREMENTS AS CONFIGURED IN THESE DOCUMENTS.

B. ALL INTERIOR DIMENSIONS ARE MEASURED FROM FINISH FACE TO FINISH FACE UNLESS NOTED OTHERWISE. REFER TO THE ANNOTATION SYMBOL LEGEND AT SHEET G0.00 FOR TYPICAL DOOR PLACEMENT ON THE WALL THAT DOES NOT HAVE A DIMENSION PLACEMENT.

C. REFER TO FLOOR PLANS A110 THRU A112 AND REFLECTED CEILING PLANS A120 THRU A122 FOR ADDITIONAL INFORMATION.

D. FOR DOOR AND WINDOW TYPES REFER TO DOOR SCHEDULE (A600) AND WINDOW SCHEDULES (A610 THRU A620).

E. FOR PLUMBING FIXTURES REFER TO PLUMBING DRAWINGS.

F. FOR ROOM FINISHES REFER TO FINISH SCHEDULE (A900 - A901) AND FINISH PLANS (A910 THRU A912).

G. THE GENERAL CONTRACTOR IS TO NOTIFY ARCHITECT IF FLOOR PENETRATIONS CONFLICT WITH STRUCTURAL ELEMENTS, DUCTWORK, ETC. PRIOR TO PROCEEDING WITH WORK.

H. CLOSE ALL JOINTS BETWEEN PLUMBING FIXTURES, ACCESSORIES AND DISSIMILAR MATERIALS WITH SEALANT (I.E. SINKS AND ACCESSORIES TO WALL).

I. PARTITIONS:

- FOR PARTITION TYPE DETAILS REFER TO SHEET A950.
- DO NOT SCALE DRAWINGS, DIMENSIONS GOVERNING. DIMENSIONS ARE TO FACE OF FINSIHED PARTITION UNLESS NOTED OTHERWISE (GYPSUM BOARD SURFACE, NOT THE STUD).
- GYPSUM BOARD ABOVE THE CEILING TO BE TAPED AND FLOATED ONLY.
- INSTALL WATER RESISTANT GYPSUM BOARD (5/8") AT ALL PLUMBING CHASES.
- PROVIDE BRACING ABOVE CEILING HEIGHT PARTITIONS WHEN LONG UNBRACED WALL LENGTHS OCCUR, AND AT ALL DOOR AND GLAZED OPENING JAMBS IN ACCORDANCE WITH MANUFACTURER'S SPECIFICATIONS.

J. THE GENERAL CONTRACTOR IS RESPONSIBLE FOR BRACING AND BLOCKING OF WALLS RECEIVING MILLWORK, SHELVING, EQUIPMENT, ETC. ALL WOOD BLOCKING, GROUNDS, ROUGH BUCKS AND MISCELLANEOUS BLOCKING IS TO BE FIRE-RETARDANT TREATED.

K. THE GENERAL CONTRACTOR SHALL CONFIRM ALL OWNER FURNISHED OWNER INSTALLED (O.F.O.I.) AND OWNER FURNISHED CONTRACTOR INSTALLED (O.F.C.I.) ITEMS WITH THE ARCHITECT AND THE OWNER PRIOR TO CONTRACTION.

KEY NOTES: INTERIOR ELEVATIONS 1

1 STAIR 1
2 GLASS GUARDRAIL
3 CURTAINWALL SYSTEM
4 ALUMINUM FRAME SYSTEM
5 PENDANT LIGHT FIXTURE
6 ACOUSTIC PANELS

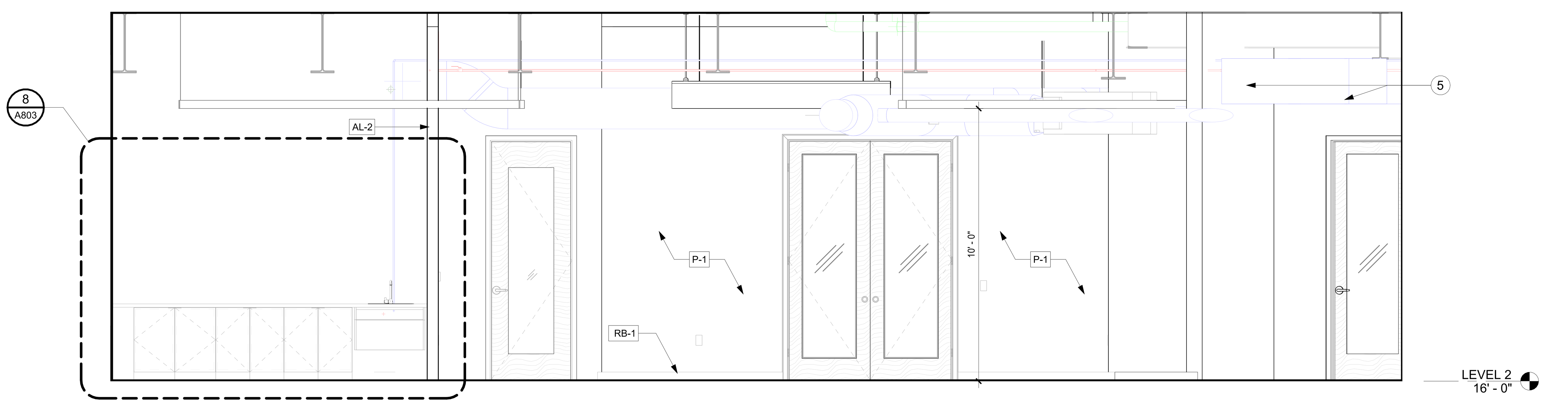

3 A731 INT ELEV: BULLPEN 202 VIEW SOUTH
SCALE : 3/8" = 1'-0"

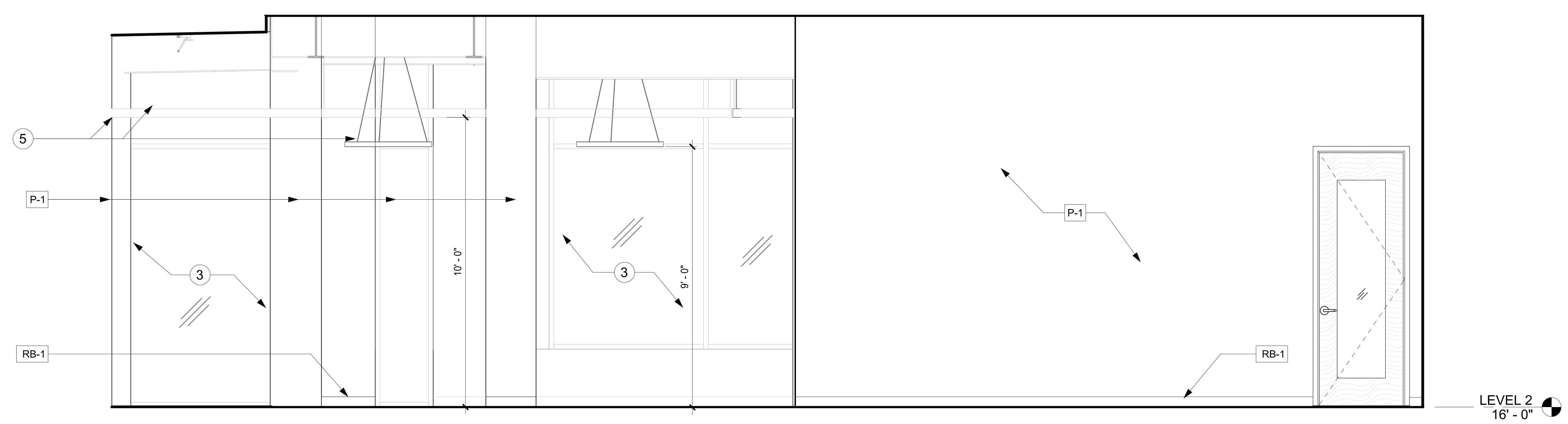

2 A731 INT ELEV: BULLPEN 202 VIEW EAST
SCALE : 3/8" = 1'-0"

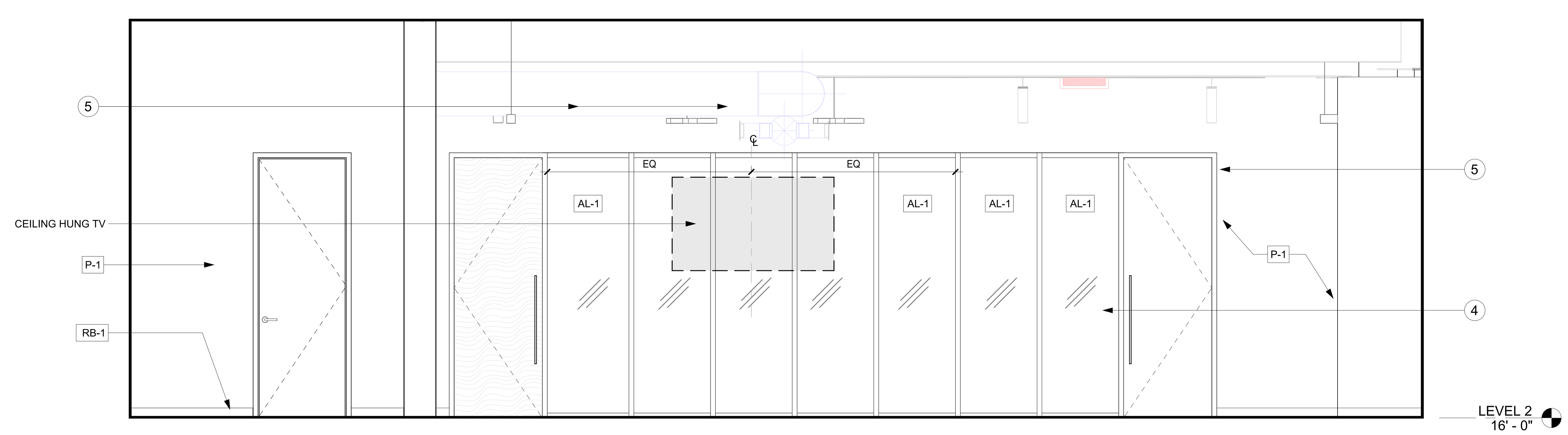

1 A731 INT ELEV: BULLPEN 202 VIEW NORTH
SCALE : 3/8" = 1'-0"

FSGROUP®
ARCHITECTS
16575 Village Drive
Houston Texas 77040
713 344 1752 PH
fsdesignbuild.com

PROJECT NAME

INFORMATION TECHNOLGY BUILDING
1419 EUGENE HEIMANN CIRCLE
FORT BEND COUNTY . RICHMOND . TEXAS 77469

CONSULTANTS

PROFESSIONAL SEAL

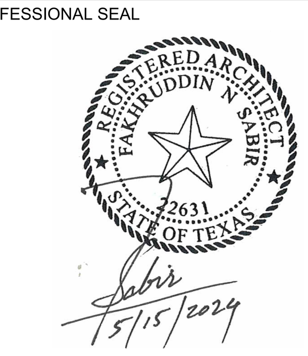

ISSUED FOR

ISSUED FOR PROPOSALS AND PERMIT

REVISIONS

No.	DESCRIPTION	DATE

KEY PLAN

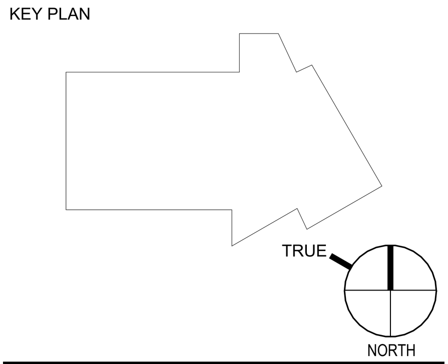

SHEET TITLE

INTERIOR ELEVATIONS LEVEL 2 BULLPEN 202

SCALE: As indicated

DATE: 05/15/2024

PROJECT NUMBER: 2319

SHEET NUMBER

A731

FILE PATH: Autodesk Docs://FBC IT Building/FBIT_A23.rvt

PLOT DATE: 5/21/2024 5:21:22 PM

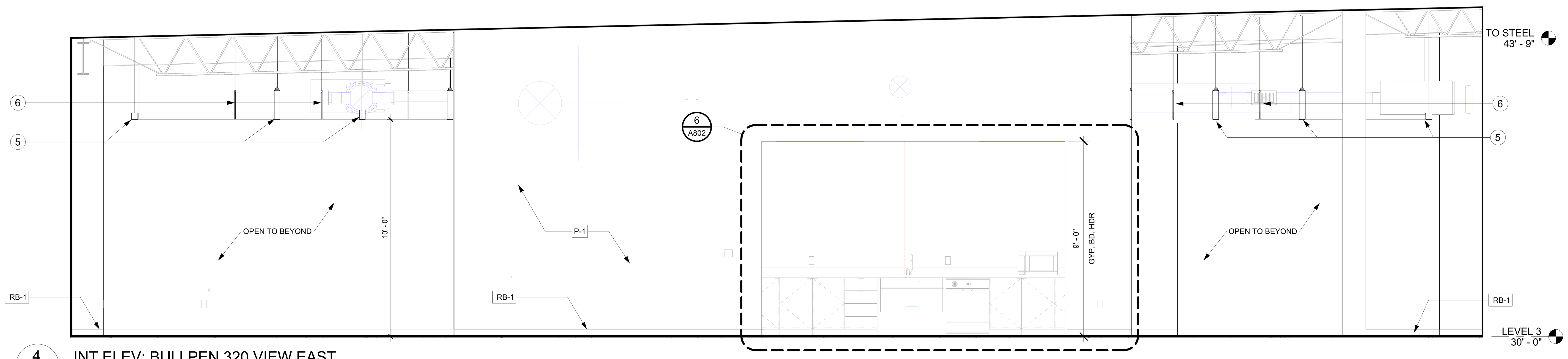

4 A740 INT ELEV: BULLPEN 320 VIEW EAST
SCALE : 3/8" = 1'-0"

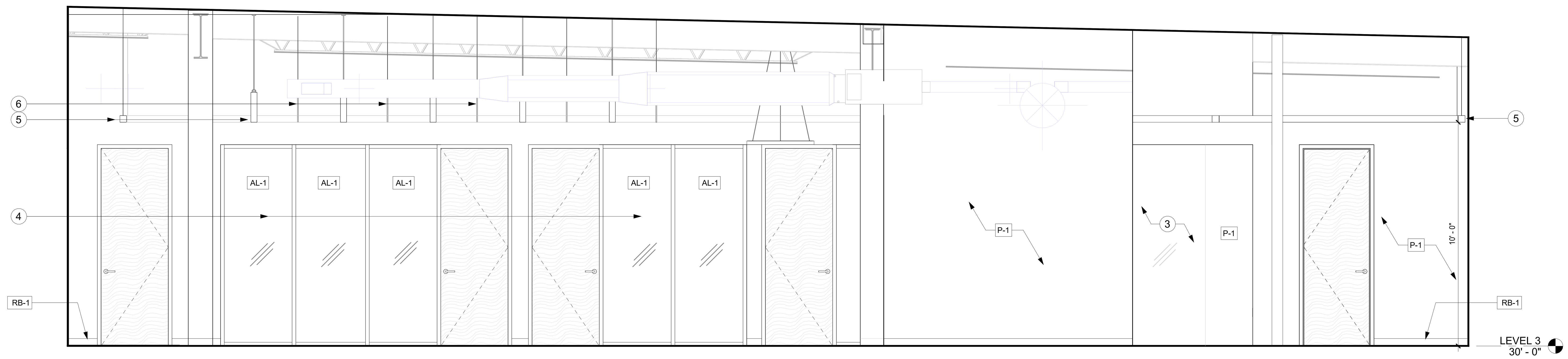

3 A740 INT ELEV: BULLPEN 320 VIEW WEST
SCALE : 3/8" = 1'-0"

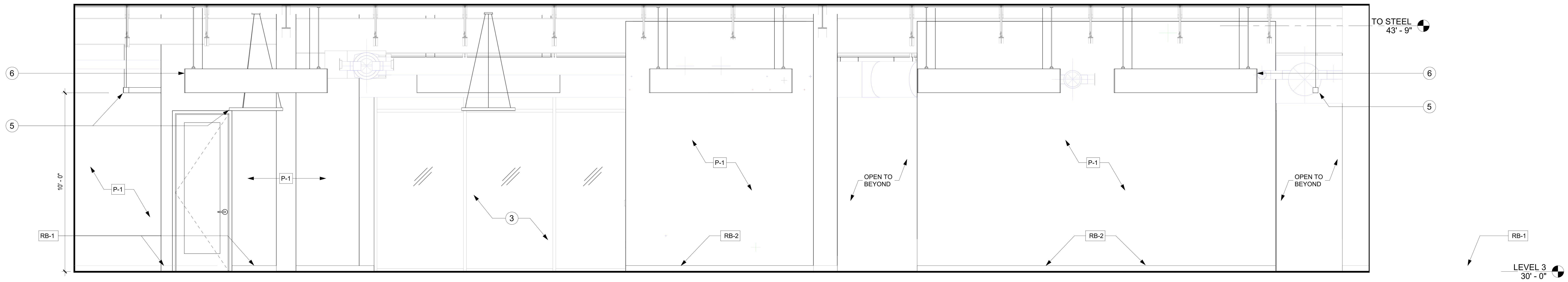

2 A740 INT ELEV: BULLPEN 320 VIEW NORTH
SCALE : 3/8" = 1'-0"

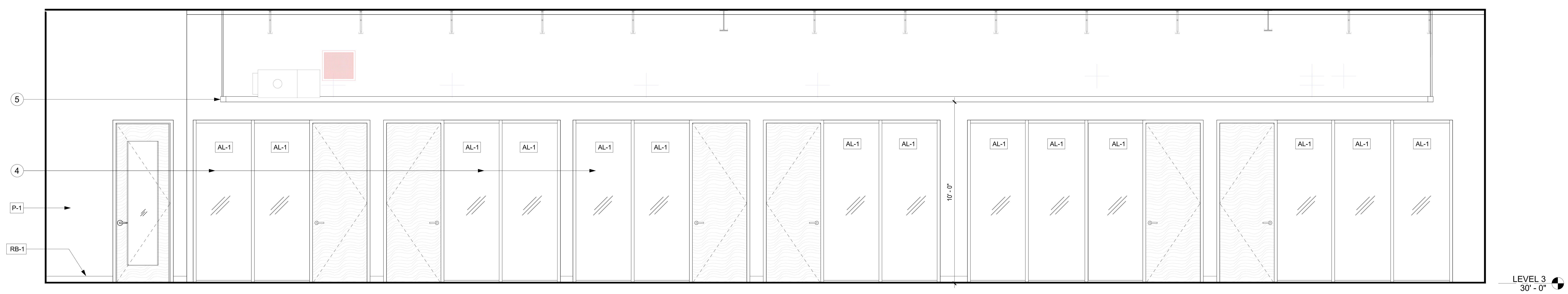

1 A740 INT ELEV: BULLPEN 320 VIEW SOUTH
SCALE : 3/8" = 1'-0"

GENERAL NOTES: INTERIOR ELEVATIONS

A. THE GENERAL CONTRACTOR SHALL CONFIRM ALL DIMENSIONAL, ARCHITECTRUAL AND M.E.P. REQUIREMENTS AS CONFIGURED IN THESE DOCUMENTS.

B. ALL INTERIOR DIMENSIONS ARE MEASURED FROM FINISH FACE TO FINISH FACE UNLESS NOTED OTHERWISE. REFER TO THE ANNOTATION SYMBOL LEGEND AT SHEET G0.00 FOR TYPICAL DOOR PLACEMENT ON THE WALL THAT DOES NOT HAVE A DIMENSION PLACEMENT.

C. REFER TO FLOOR PLANS A110 THRU A112 AND REFLECTED CEILING PLANS A120 THRU A122 FOR ADDITIONAL INFORMATION.

D. FOR DOOR AND WINDOW TYPES REFER TO DOOR SCHEDULE (A600) AND WINDOW SCHEDULES (A610 THRU A620).

E. FOR PLUMBING FIXTURES REFER TO PLUMBING DRAWINGS.

F. FOR ROOM FINISHES REFER TO FINISH SCHEDULE (A900 - A901) AND FINISH PLANS (A910 THRU A912).

G. THE GENERAL CONTRACTOR IS TO NOTIFY ARCHITECT IF FLOOR PENETRATIONS CONFLICT WITH STRUCTURAL ELEMENTS, DUCTWORK, ETC. PRIOR TO PROCEEDING WITH WORK.

H. CLOSE ALL JOINTS BETWEEN PLUMBING FIXTURES, ACCESSORIES AND DISSIMILAR MATERIALS WITH SEALANT (I.E. SINKS AND ACCESSORIES TO WALL).

I. PARTITIONS:

- FOR PARTITION TYPE DETAILS REFER TO SHEET A950.
- DO NOT SCALE DRAWINGS, DIMENSIONS GOVERNING. DIMENSIONS ARE TO FACE OF FINSIHED PARTITION UNLESS NOTED OTHERWISE (GYPSUM BOARD SURFACE, NOT THE STUD).
- GYPSUM BOARD ABOVE THE CEILING TO BE TAPED AND FLOATED ONLY.
- INSTALL WATER RESISTANT GYPSUM BOARD (5/8") AT ALL PLUMBING CHASES.
- PROVIDE BRACING ABOVE CEILING HEIGHT PARTITIONS WHEN LONG UNBRACED WALL LENGTHS OCCUR, AND AT ALL DOOR AND GLAZED OPENING JAMBS IN ACCORDANCE WITH MANUFACTURER'S SPECIFICATIONS.

J. THE GENERAL CONTRACTOR IS RESPONSIBLE FOR BRACING AND BLOCKING OF WALLS RECEIVING MILLWORK, SHELVING, EQUIPMENT, ETC. ALL WOOD BLOCKING, GROUNDS, ROUGH BUCKS AND MISCELLANEOUS BLOCKING IS TO BE FIRE-RETARDANT TREATED.

K. THE GENERAL CONTRACTOR SHALL CONFIRM ALL OWNER FURNISHED OWNER INSTALLED (O.F.O.I.) AND OWNER FURNISHED CONTRACTOR INSTALLED (O.F.C.I.) ITEMS WITH THE ARCHITECT AND THE OWNER PRIOR TO CONTRACTION.

KEY NOTES: INTERIOR ELEVATIONS

1 STAIR 1
2 GLASS GUARDRAIL
3 CURTAINWALL SYSTEM
4 ALUMINUM FRAME SYSTEM
5 PENDANT LIGHT FIXTURE
6 ACOUSTIC PANELS

FSGROUP ARCHITECTS
16575 Village Drive
Houston Texas 77040
713 344 1752 PH
fsdesignbuild.com

PROJECT NAME

INFORMATION TECHNOLGY BUILDING
1419 EUGENE HEIMANN CIRCLE
FORT BEND COUNTY . RICHMOND . TEXAS 77469

CONSULTANTS

PROFESSIONAL SEAL

REGISTERED ARCHITECT FAKHRUDDIN N. SABIR 22631 STATE OF TEXAS
5/15/2024

ISSUED FOR
ISSUED FOR PROPOSALS AND PERMIT

REVISIONS

No.	DESCRIPTION	DATE

KEY PLAN

TRUE NORTH

SHEET TITLE
INTERIOR ELEVATIONS LEVEL 3 BULLPEN 320

SCALE: As indicated
DATE: 05/15/2024
PROJECT NUMBER: 2319
SHEET NUMBER: A740

FILE PATH: Autodesk Docs://FBC IT Building/FBIT_A23.rvt
PLOT DATE: 5/21/2024 5:21:36 PM

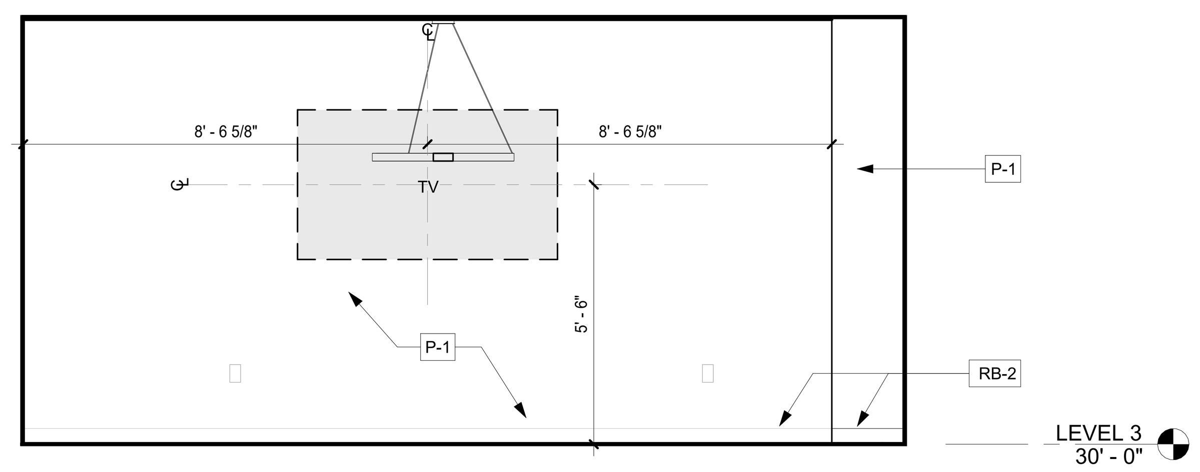

9 A750 INT ELEV: TESTING HUDDLE 309 VIEW EAST
SCALE : 3/8" = 1'-0"

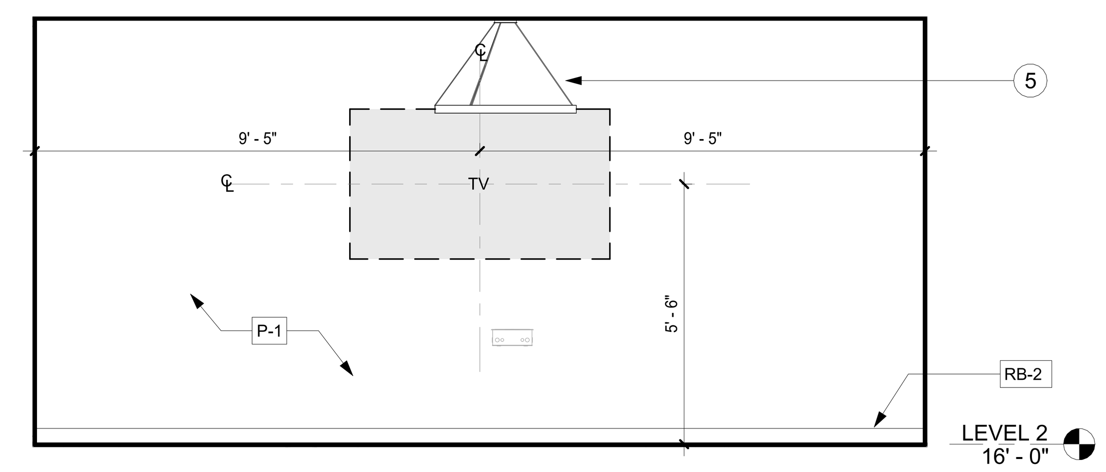

4 A750 INT ELEV: CONFERENCE 221 VIEW EAST
SCALE : 3/8" = 1'-0"

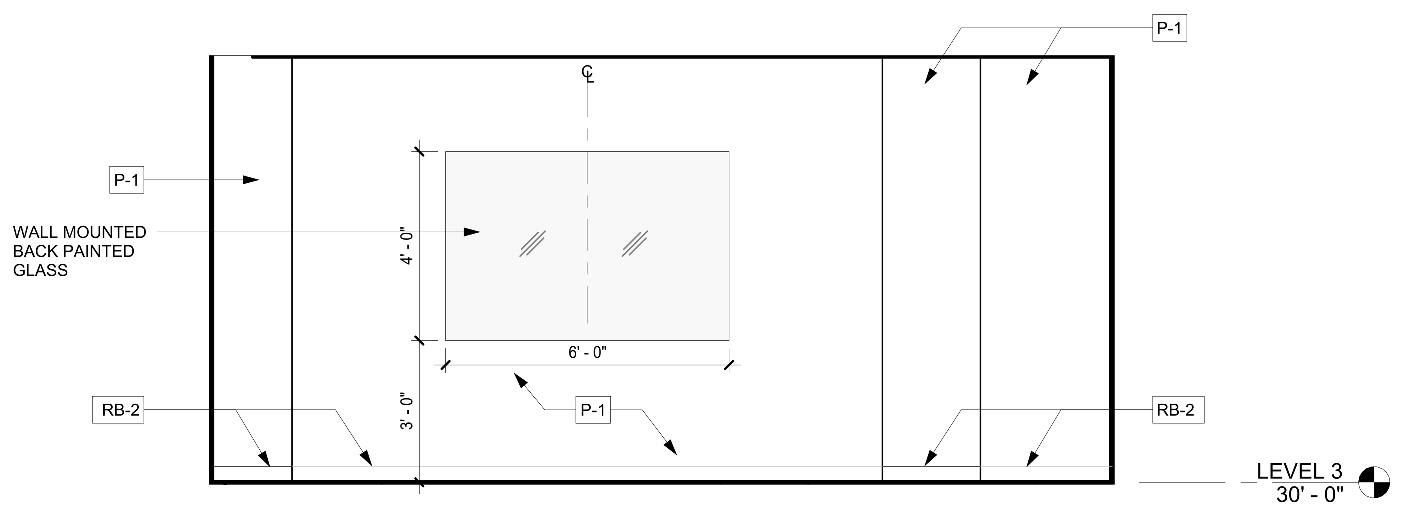

8 A750 INT ELEV: TESTING HUDDLE 309 VIEW WEST
SCALE : 3/8" = 1'-0"

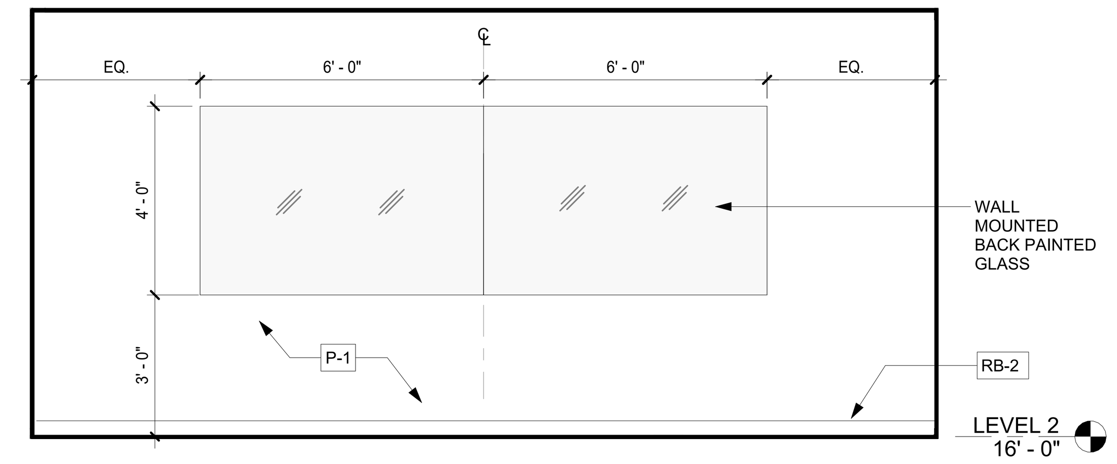

3 A750 INT ELEV: CONFERENCE 221 VIEW WEST
SCALE : 3/8" = 1'-0"

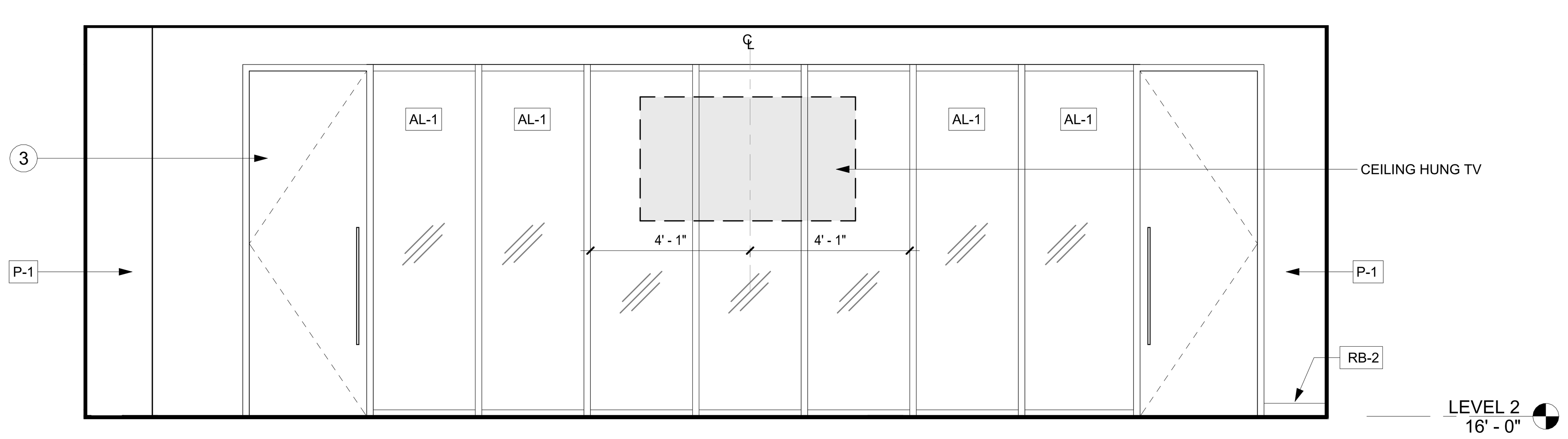

7 A750 INT ELEV: CYBER/ NSOC 208 VIEW SOUTH
SCALE : 3/8" = 1'-0"

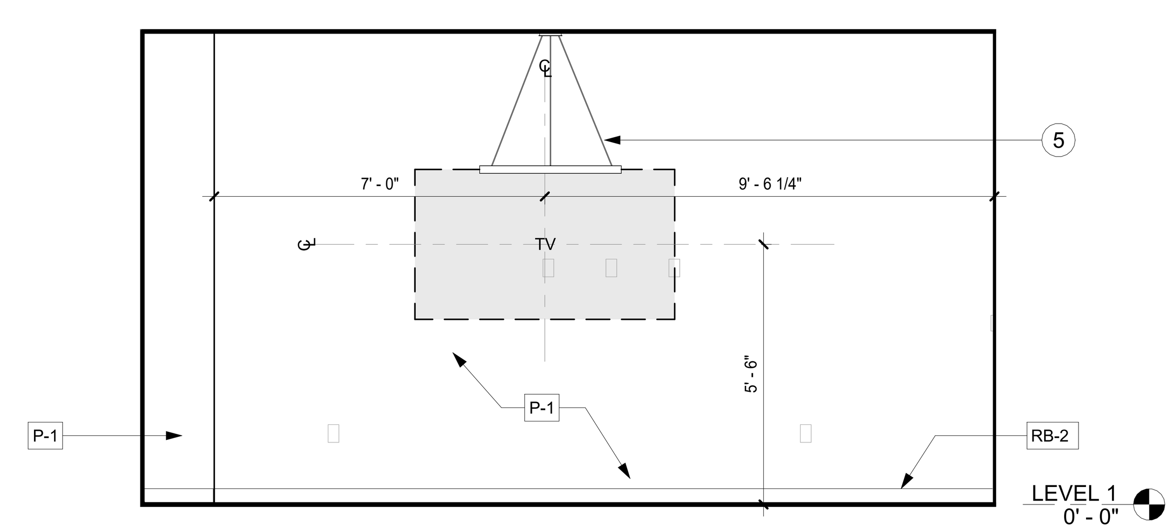

2 A750 INT ELEV: CONFERENCE 129 VIEW NORTH
SCALE : 3/8" = 1'-0"

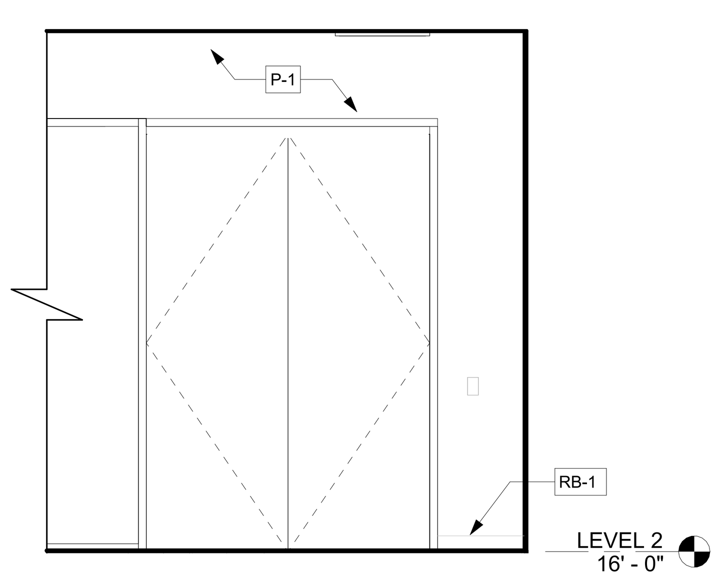

6 A750 INT ELEV: DATA CENTER 240 VIEW WEST
SCALE : 3/8" = 1'-0"

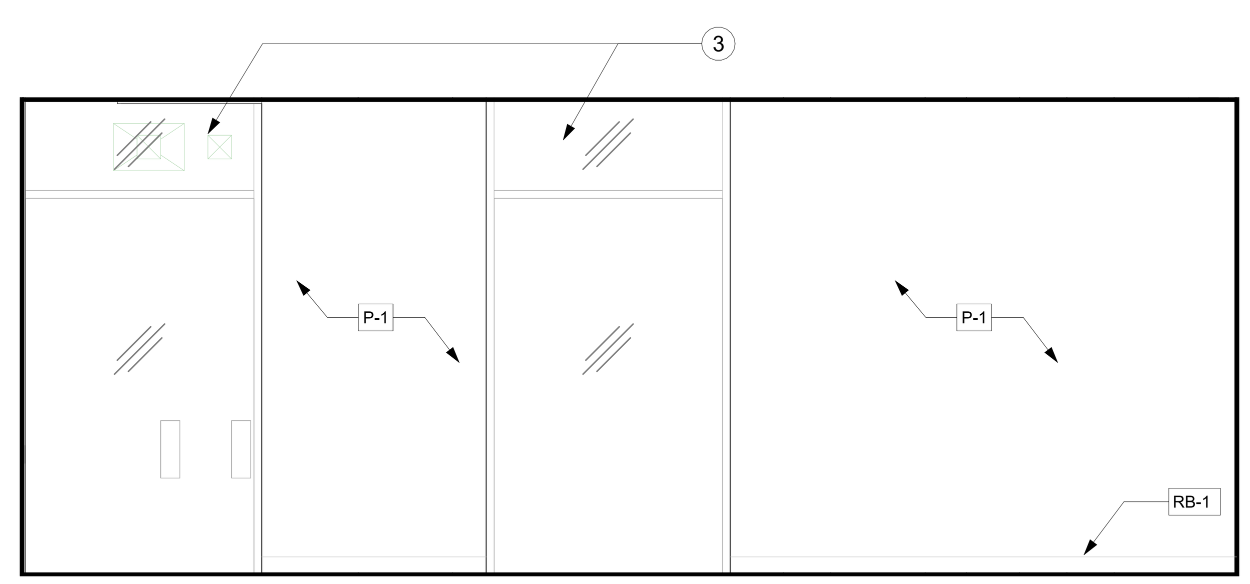

5 A750 INT ELEV: DATA CENTER 240 VIEW NORTH
SCALE : 3/8" = 1'-0"

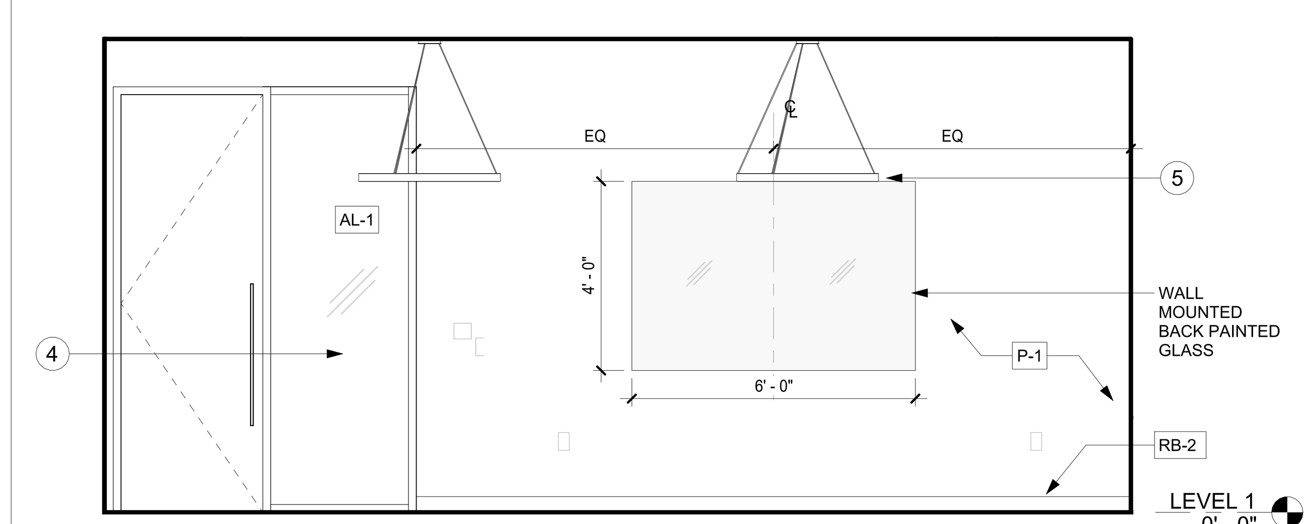

1 A750 INT ELEV: CONFERENCE 129 VIEW EAST
SCALE : 3/8" = 1'-0"

GENERAL NOTES: INTERIOR ELEVATIONS

A. THE GENERAL CONTRACTOR SHALL CONFIRM ALL DIMENSIONAL, ARCHITECTRUAL AND M.E.P. REQUIREMENTS AS CONFIGURED IN THESE DOCUMENTS.

B. ALL INTERIOR DIMENSIONS ARE MEASURED FROM FINISH FACE TO FINISH FACE UNLESS NOTED OTHERWISE. REFER TO THE ANNOTATION SYMBOL LEGEND AT SHEET G0.00 FOR TYPICAL DOOR PLACEMENT ON THE WALL THAT DOES NOT HAVE A DIMENSION PLACEMENT.

C. REFER TO FLOOR PLANS A110 THRU A112 AND REFLECTED CEILING PLANS A120 THRU A122 FOR ADDITIONAL INFORMATION.

D. FOR DOOR AND WINDOW TYPES REFER TO DOOR SCHEDULE (A600) AND WINDOW SCHEDULES (A610 THRU A620).

E. FOR PLUMBING FIXTURES REFER TO PLUMBING DRAWINGS.

F. FOR ROOM FINISHES REFER TO FINISH SCHEDULE (A900 - A901) AND FINISH PLANS (A910 THRU A912).

G. THE GENERAL CONTRACTOR IS TO NOTIFY ARCHITECT IF FLOOR PENETRATIONS CONFLICT WITH STRUCTURAL ELEMENTS, DUCTWORK, ETC. PRIOR TO PROCEEDING WITH WORK.

H. CLOSE ALL JOINTS BETWEEN PLUMBING FIXTURES, ACCESSORIES AND DISSIMILAR MATERIALS WITH SEALANT (I.E. SINKS AND ACCESSORIES TO WALL).

I. PARTITIONS:

- FOR PARTITION TYPE DETAILS REFER TO SHEET A950.
- DO NOT SCALE DRAWINGS, DIMENSIONS GOVERNING. DIMENSIONS ARE TO FACE OF FINSIHED PARTITION UNLESS NOTED OTHERWISE (GYPSUM BOARD SURFACE, NOT THE STUD).
- GYPSUM BOARD ABOVE THE CEILING TO BE TAPED AND FLOATED ONLY.
- INSTALL WATER RESISTANT GYPSUM BOARD (5/8") AT ALL PLUMBING CHASES.
- PROVIDE BRACING ABOVE CEILING HEIGHT PARTITIONS WHEN LONG UNBRACED WALL LENGTHS OCCUR, AND AT ALL DOOR AND GLAZED OPENING JAMBS IN ACCORDANCE WITH MANUFACTURER'S SPECIFICATIONS.

J. THE GENERAL CONTRACTOR IS RESPONSIBLE FOR BRACING AND BLOCKING OF WALLS RECEIVING MILLWORK, SHELVING, EQUIPMENT, ETC. ALL WOOD BLOCKING, GROUNDS, ROUGH BUCKS AND MISCELLANEOUS BLOCKING IS TO BE FIRE-RETARDANT TREATED.

K. THE GENERAL CONTRACTOR SHALL CONFIRM ALL OWNER FURNISHED OWNER INSTALLED (O.F.O.I.) AND OWNER FURNISHED CONTRACTOR INSTALLED (O.F.C.I.) ITEMS WITH THE ARCHITECT AND THE OWNER PRIOR TO CONTRACTION.

KEY NOTES: INTERIOR ELEVATIONS 1

1 STAIR 1
2 GLASS GUARDRAIL
3 CURTAINWALL SYSTEM
4 ALUMINUM FRAME SYSTEM
5 PENDANT LIGHT FIXTURE
6 ACOUSTIC PANELS

FSGROUP®
ARCHITECTS
16575 Village Drive
Houston Texas 77040
713 344 1752 PH
fsdesignbuild.com

PROJECT NAME

INFORMATION TECHNOLGY BUILDING
1419 EUGENE HEIMANN CIRCLE
FORT BEND COUNTY . RICHMOND . TEXAS 77469

CONSULTANTS

PROFESSIONAL SEAL

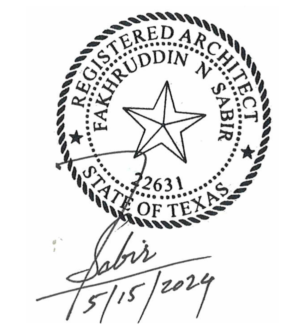

ISSUED FOR
ISSUED FOR PROPOSALS AND PERMIT

REVISIONS

No.	DESCRIPTION	DATE

KEY PLAN

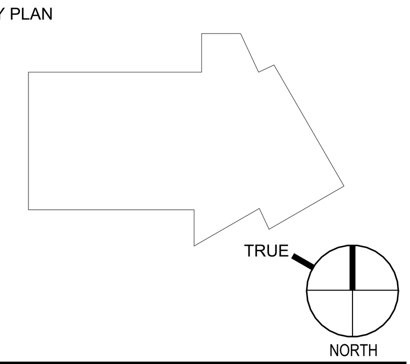

SHEET TITLE
INTERIOR ELEVATIONS - MISC

SCALE
As indicated

DATE
05/15/2024

PROJECT NUMBER
2319

SHEET NUMBER
A750

PLOT DATE: 5/21/2024 5:21:51 PM
FILE PATH: Autodesk Docs://FBC IT Building/FBIT_A23.rvt

GENERAL NOTES: INTERIOR ELEVATIONS

A. THE GENERAL CONTRACTOR SHALL CONFIRM ALL DIMENSIONAL, ARCHITECTRUAL AND M.E.P. REQUIREMENTS AS CONFIGURED IN THESE DOCUMENTS.

B. ALL INTERIOR DIMENSIONS ARE MEASURED FROM FINISH FACE TO FINISH FACE UNLESS NOTED OTHERWISE. REFER TO THE ANNOTATION SYMBOL LEGEND AT SHEET G0.00 FOR TYPICAL DOOR PLACEMENT ON THE WALL THAT DOES NOT HAVE A DIMENSION PLACEMENT.

C. REFER TO FLOOR PLANS A110 THRU A112 AND REFLECTED CEILING PLANS A120 THRU A122 FOR ADDITIONAL INFORMATION.

D. FOR DOOR AND WINDOW TYPES REFER TO DOOR SCHEDULE (A600) AND WINDOW SCHEDULES (A610 THRU A620).

E. FOR PLUMBING FIXTURES REFER TO PLUMBING DRAWINGS.

F. FOR ROOM FINISHES REFER TO FINISH SCHEDULE (A900 - A901) AND FINISH PLANS (A910 THRU A912).

G. THE GENERAL CONTRACTOR IS TO NOTIFY ARCHITECT IF FLOOR PENETRATIONS CONFLICT WITH STRUCTURAL ELEMENTS, DUCTWORK, ETC. PRIOR TO PROCEEDING WITH WORK.

H. CLOSE ALL JOINTS BETWEEN PLUMBING FIXTURES, ACCESSORIES AND DISSIMILAR MATERIALS WITH SEALANT (I.E. SINKS AND ACCESSORIES TO WALL).

I. PARTITIONS:

- FOR PARTITION TYPE DETAILS REFER TO SHEET A950.
- DO NOT SCALE DRAWINGS, DIMENSIONS GOVERNING. DIMENSIONS ARE TO FACE OF FINSIHED PARTITION UNLESS NOTED OTHERWISE (GYPSUM BOARD SURFACE, NOT THE STUD).
- GYPSUM BOARD ABOVE THE CEILING TO BE TAPED AND FLOATED ONLY.
- INSTALL WATER RESISTANT GYPSUM BOARD (5/8") AT ALL PLUMBING CHASES.
- PROVIDE BRACING ABOVE CEILING HEIGHT PARTITIONS WHEN LONG UNBRACED WALL LENGTHS OCCUR, AND AT ALL DOOR AND GLAZED OPENING JAMBS IN ACCORDANCE WITH MANUFACTURER'S SPECIFICATIONS.

J. THE GENERAL CONTRACTOR IS RESPONSIBLE FOR BRACING AND BLOCKING OF WALLS RECEIVING MILLWORK, SHELVING, EQUIPMENT, ETC. ALL WOOD BLOCKING, GROUNDS, ROUGH BUCKS AND MISCELLANEOUS BLOCKING IS TO BE FIRE-RETARDANT TREATED.

K. THE GENERAL CONTRACTOR SHALL CONFIRM ALL OWNER FURNISHED OWNER INSTALLED (O.F.O.I.) AND OWNER FURNISHED CONTRACTOR INSTALLED (O.F.C.I.) ITEMS WITH THE ARCHITECT AND THE OWNER PRIOR TO CONTRACTION.

KEY NOTES: INTERIOR ELEVATIONS 1

1 STAIR 1
2 GLASS GUARDRAIL
3 CURTAINWALL SYSTEM
4 ALUMINUM FRAME SYSTEM
5 PENDANT LIGHT FIXTURE
6 ACOUSTIC PANELS

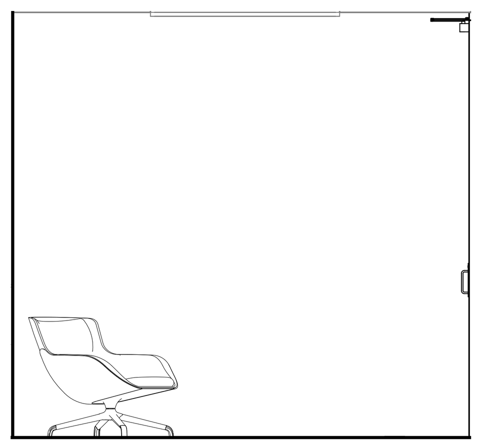

7 A751 ELEV: QUIET RM 246 - NORTH
SCALE : 3/8" = 1'-0" SIMILAR: QUIET ROOMS 146 & 346

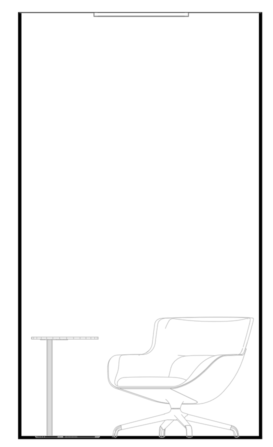

9 A751 ELEV: QUIET RM 246 - WEST
SCALE : 3/8" = 1'-0" SIMILAR: QUIET ROOMS 146 & 346

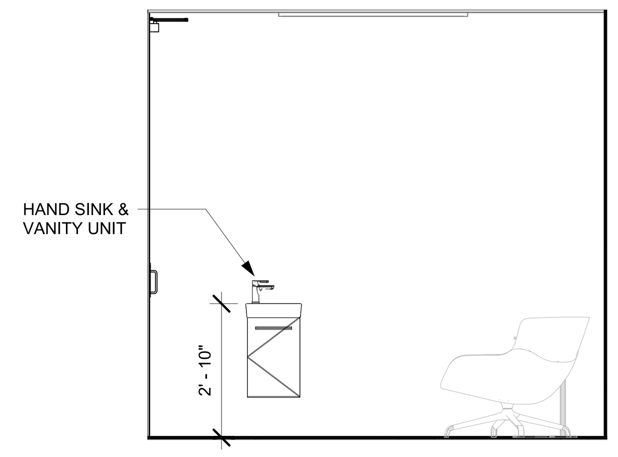

8 A751 ELEV: QUIET RM 246 - SOUTH
SCALE : 3/8" = 1'-0" SIMILAR: QUIET ROOMS 146 & 346

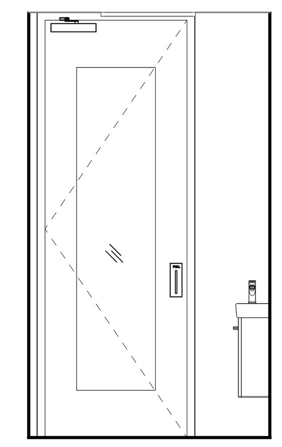

6 A751 ELEV: QUIET RM 246 - EAST
SCALE : 3/8" = 1'-0" SIMILAR: QUIET ROOMS 146 & 346

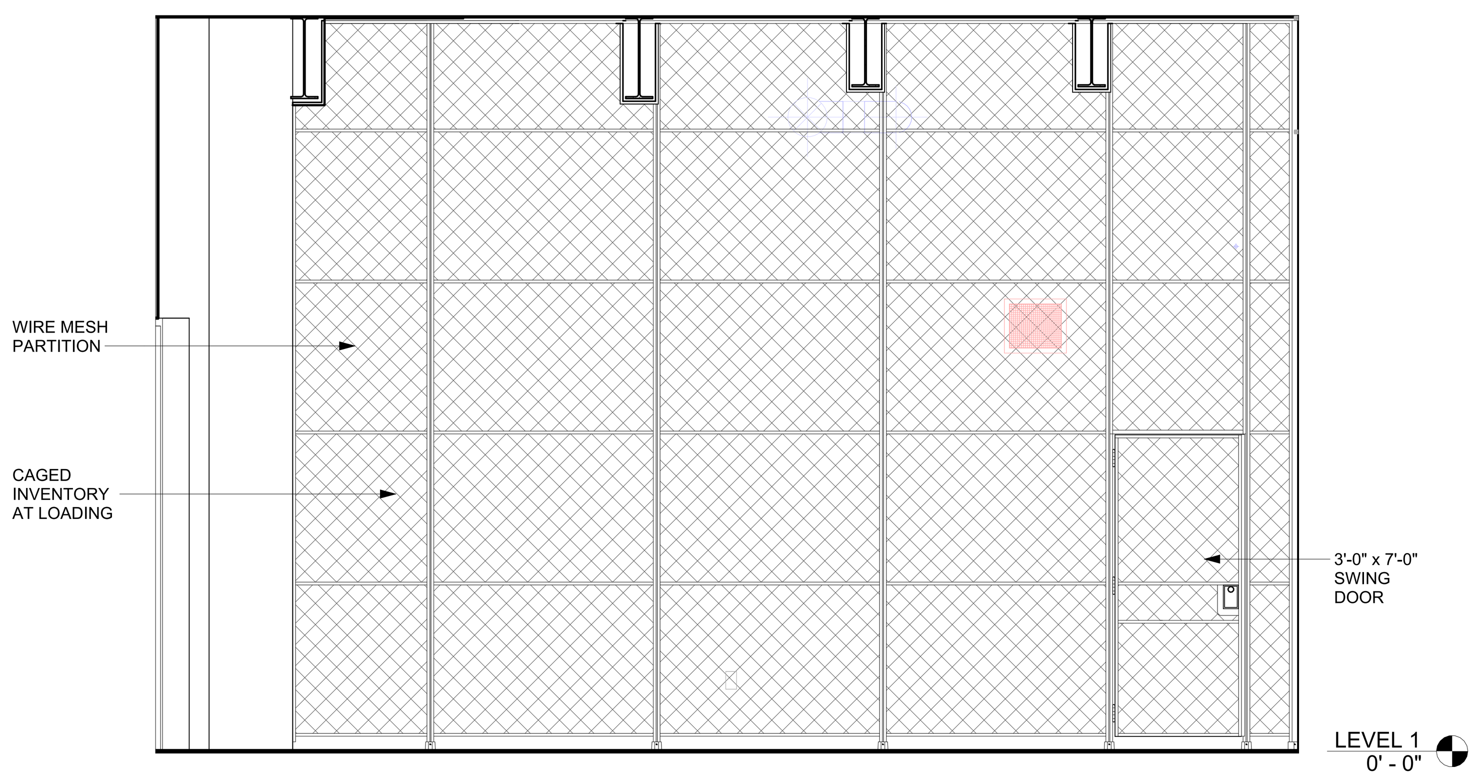

10 A751 CAGED INVENTORY - VIEW SOUTH WEST
SCALE : 3/8" = 1'-0"

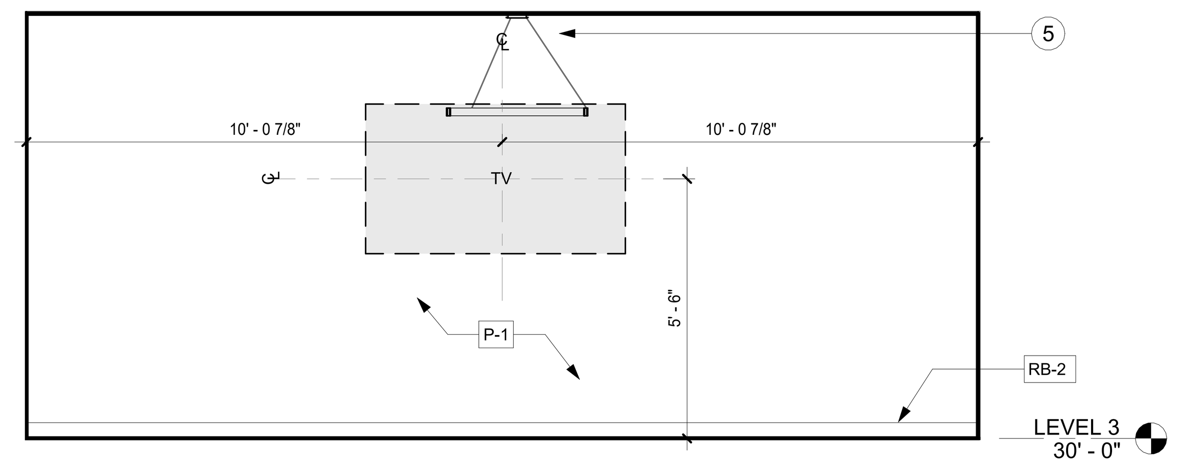

4 A751 INT ELEV: CONFERENCE 310 VIEW NORTH
SCALE : 3/8" = 1'-0"

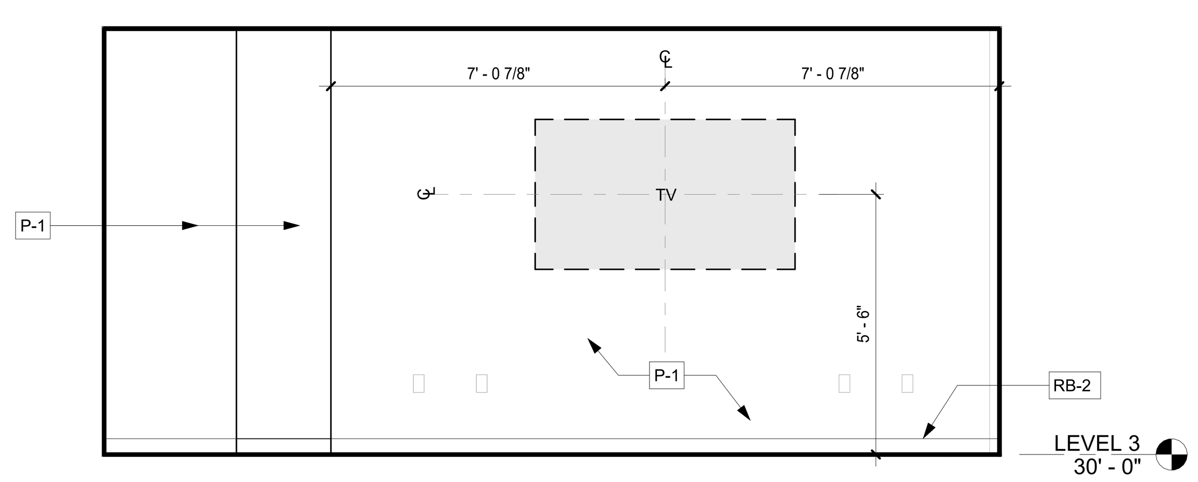

3 A751 INT ELEV: GIS WORKROOM 301 VIEW EAST
SCALE : 3/8" = 1'-0"

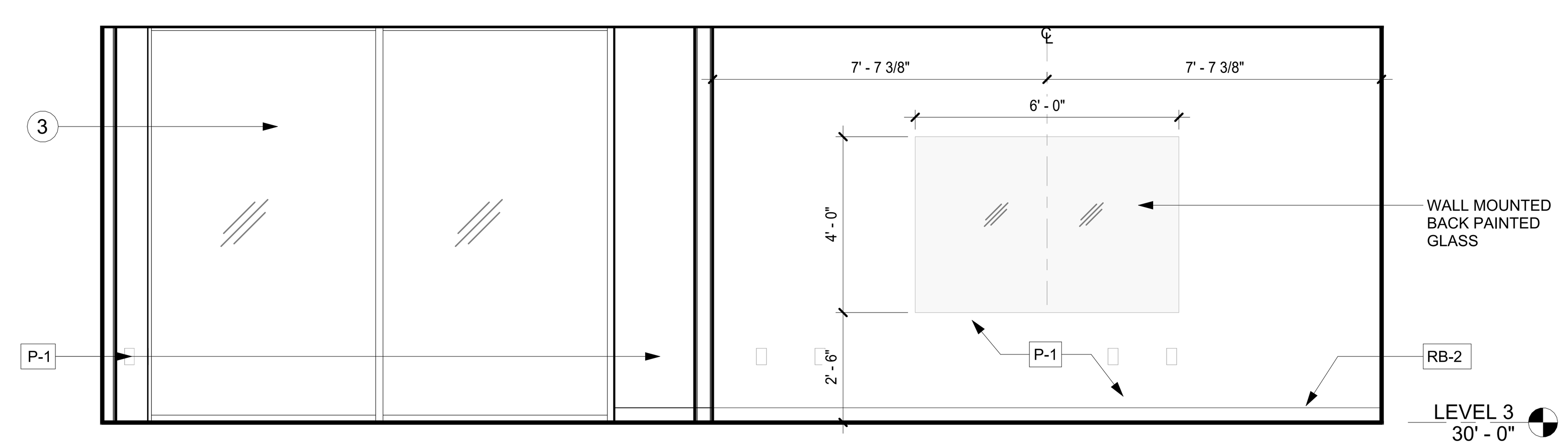

2 A751 INT ELEV: GIS WORKROOM 301 VIEW WEST
SCALE : 3/8" = 1'-0"

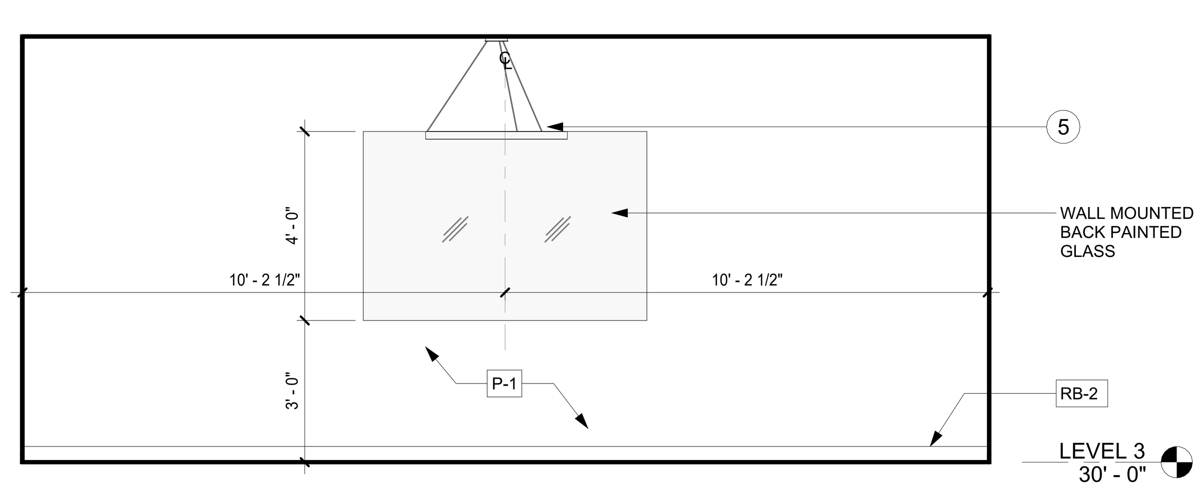

5 A751 INT ELEV: CONFERENCE 310 VIEW SOUTH
SCALE : 3/8" = 1'-0"

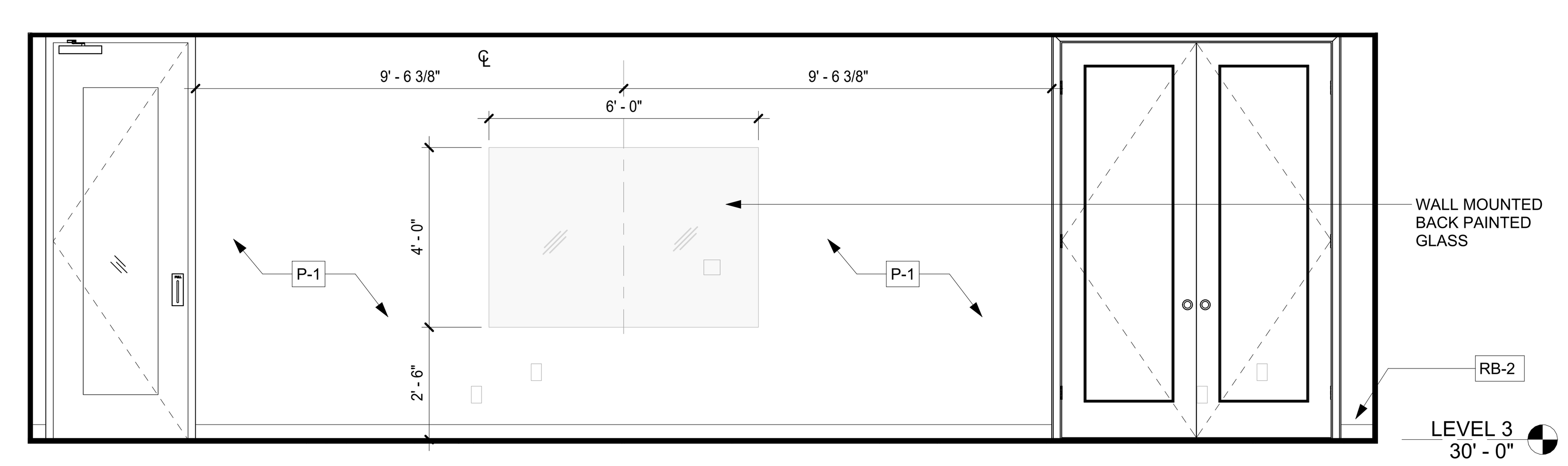

1 A751 INT ELEV: GIS WORKROOM 301 VIEW NORTH
SCALE : 3/8" = 1'-0"

FSGROUP ARCHITECTS
16575 Village Drive
Houston Texas 77040
713 344 1752 PH
fsdesignbuild.com

PROJECT NAME

INFORMATION TECHNOLGY BUILDING
1419 EUGENE HEIMANN CIRCLE
FORT BEND COUNTY . RICHMOND . TEXAS 77469

CONSULTANTS

PROFESSIONAL SEAL

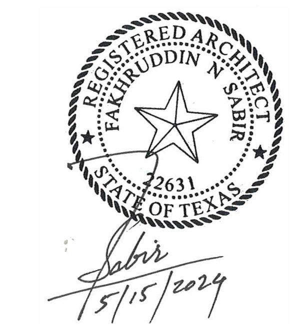

ISSUED FOR
ISSUED FOR PROPOSALS AND PERMIT

REVISIONS

No.	DESCRIPTION	DATE

KEY PLAN

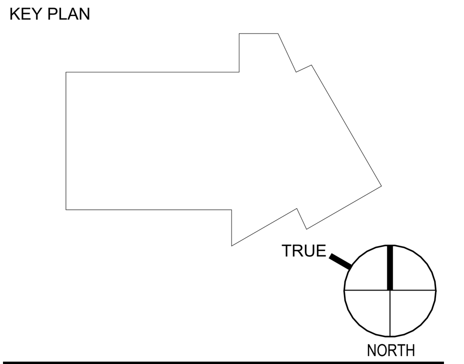

SHEET TITLE
INTERIOR ELEVATIONS - MISC

SCALE: As indicated
DATE: 05/15/2024
PROJECT NUMBER: 2319
SHEET NUMBER: A751

PLOT DATE: 5/21/2024 5:22:11 PM
FILE PATH: Autodesk Docs://FBC IT Building/FBIT_A23.rvt

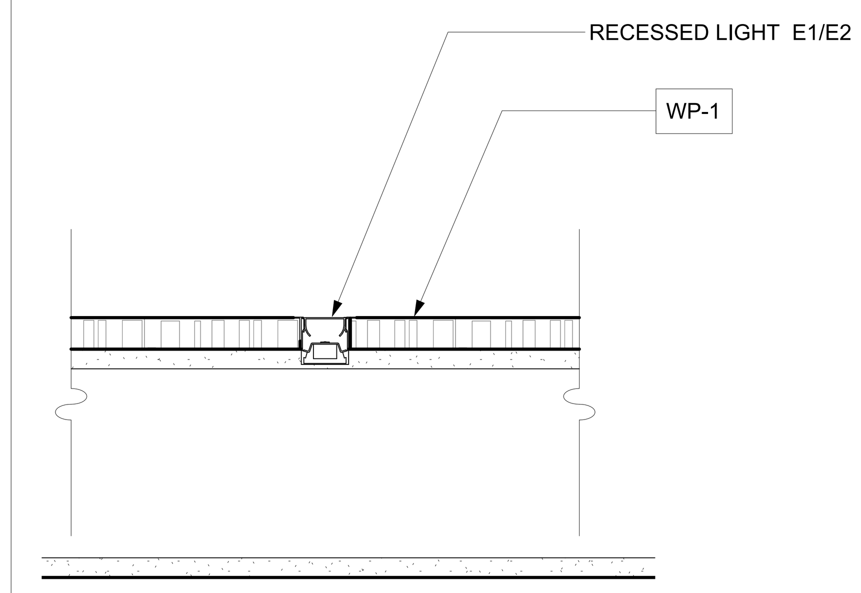

3
A760
DETAIL: RECESSED LIGHT
SCALE : 3" = 1'-0"

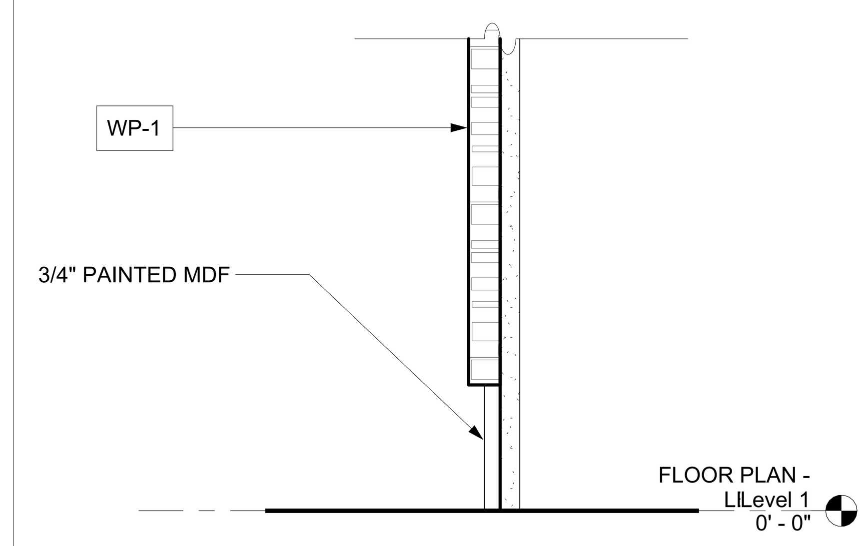

2
A760
SECTION: RECEPTION BACKWALL
SCALE : 3" = 1'-0"

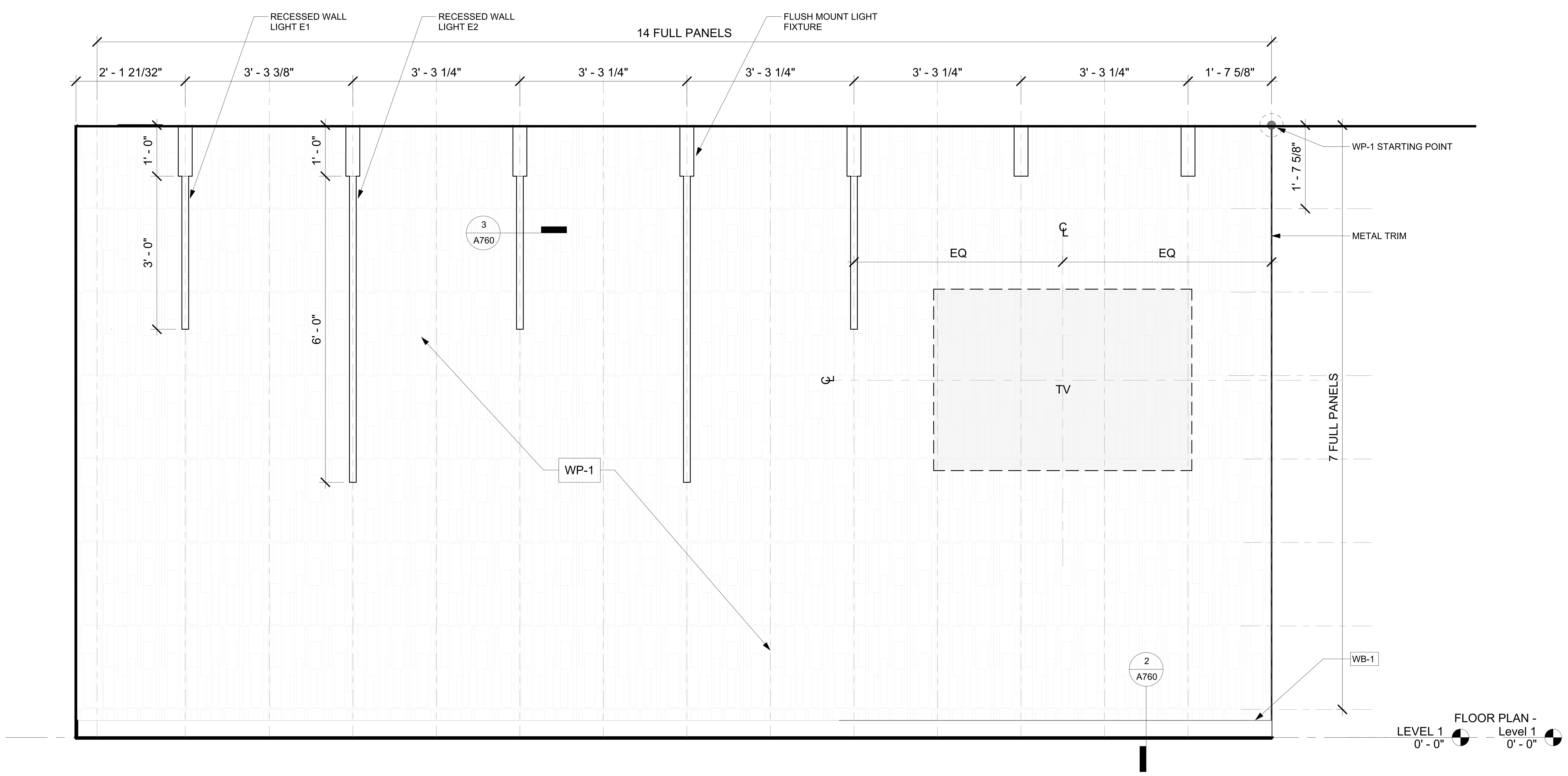

1
A760
INT ELEV: LOBBY 100 VIEW NORTH
SCALE : 3/4" = 1'-0"

GENERAL NOTES: INTERIOR ELEVATIONS

A. THE GENERAL CONTRACTOR SHALL CONFIRM ALL DIMENSIONAL, ARCHITECTRUAL AND M.E.P. REQUIREMENTS AS CONFIGURED IN THESE DOCUMENTS.

B. ALL INTERIOR DIMENSIONS ARE MEASURED FROM FINISH FACE TO FINISH FACE UNLESS NOTED OTHERWISE. REFER TO THE ANNOTATION SYMBOL LEGEND AT SHEET G0.00 FOR TYPICAL DOOR PLACEMENT ON THE WALL THAT DOES NOT HAVE A DIMENSION PLACEMENT.

C. REFER TO FLOOR PLANS A110 THRU A112 AND REFLECTED CEILING PLANS A120 THRU A122 FOR ADDITIONAL INFORMATION.

D. FOR DOOR AND WINDOW TYPES REFER TO DOOR SCHEDULE (A600) AND WINDOW SCHEDULES (A610 THRU A620).

E. FOR PLUMBING FIXTURES REFER TO PLUMBING DRAWINGS.

F. FOR ROOM FINISHES REFER TO FINISH SCHEDULE (A900 - A901) AND FINISH PLANS (A910 THRU A912).

G. THE GENERAL CONTRACTOR IS TO NOTIFY ARCHITECT IF FLOOR PENETRATIONS CONFLICT WITH STRUCTURAL ELEMENTS, DUCTWORK, ETC. PRIOR TO PROCEEDING WITH WORK.

H. CLOSE ALL JOINTS BETWEEN PLUMBING FIXTURES, ACCESSORIES AND DISSIMILAR MATERIALS WITH SEALANT (I.E. SINKS AND ACCESSORIES TO WALL).

I. PARTITIONS:

- FOR PARTITION TYPE DETAILS REFER TO SHEET A950.
- DO NOT SCALE DRAWINGS, DIMENSIONS GOVERNING. DIMENSIONS ARE TO FACE OF FINSIHED PARTITION UNLESS NOTED OTHERWISE (GYPSUM BOARD SURFACE, NOT THE STUD).
- GYPSUM BOARD ABOVE THE CEILING TO BE TAPED AND FLOATED ONLY.
- INSTALL WATER RESISTANT GYPSUM BOARD (5/8") AT ALL PLUMBING CHASES.
- PROVIDE BRACING ABOVE CEILING HEIGHT PARTITIONS WHEN LONG UNBRACED WALL LENGTHS OCCUR, AND AT ALL DOOR AND GLAZED OPENING JAMBS IN ACCORDANCE WITH MANUFACTURER'S SPECIFICATIONS.

J. THE GENERAL CONTRACTOR IS RESPONSIBLE FOR BRACING AND BLOCKING OF WALLS RECEIVING MILLWORK, SHELVING, EQUIPMENT, ETC. ALL WOOD BLOCKING, GROUNDS, ROUGH BUCKS AND MISCELLANEOUS BLOCKING IS TO BE FIRE-RETARDANT TREATED.

K. THE GENERAL CONTRACTOR SHALL CONFIRM ALL OWNER FURNISHED OWNER INSTALLED (O.F.O.I.) AND OWNER FURNISHED CONTRACTOR INSTALLED (O.F.C.I.) ITEMS WITH THE ARCHITECT AND THE OWNER PRIOR TO CONTRACTION.

KEY NOTES: INTERIOR ELEVATIONS (1)

1 STAIR 1
2 GLASS GUARDRAIL
3 CURTAINWALL SYSTEM
4 ALUMINUM FRAME SYSTEM
5 PENDANT LIGHT FIXTURE
6 ACOUSTIC PANELS

FSGROUP®
ARCHITECTS
16575 Village Drive
Houston Texas 77040
713 344 1752 PH
fsdesignbuild.com

PROJECT NAME

THE STATE OF TEXAS
FORT BEND COUNTY

INFORMATION TECHNOLGY BUILDING
1419 EUGENE HEIMANN CIRCLE
FORT BEND COUNTY , RICHMOND , TEXAS 77469

CONSULTANTS

PROFESSIONAL SEAL

REGISTERED ARCHITECT
FAKHRUDDIN 'N' SABIR
22531
STATE OF TEXAS
5/15/2024

ISSUED FOR
ISSUED FOR PROPOSALS AND PERMIT

REVISIONS

No.	DESCRIPTION	DATE

KEY PLAN

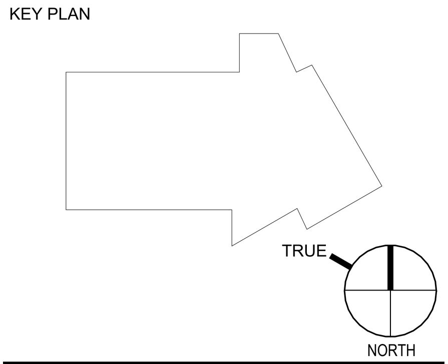

SHEET TITLE
INTERIOR ELEVATIONS RECEPTION BACK WALL

SCALE
As indicated

DATE
05/15/2024

PROJECT NUMBER
2319

SHEET NUMBER
A760

FILE PATH: Autodesk Docs://FBC IT Building/FBIT_A23.rvt
PLOT DATE: 5/21/2024 5:22:28 PM

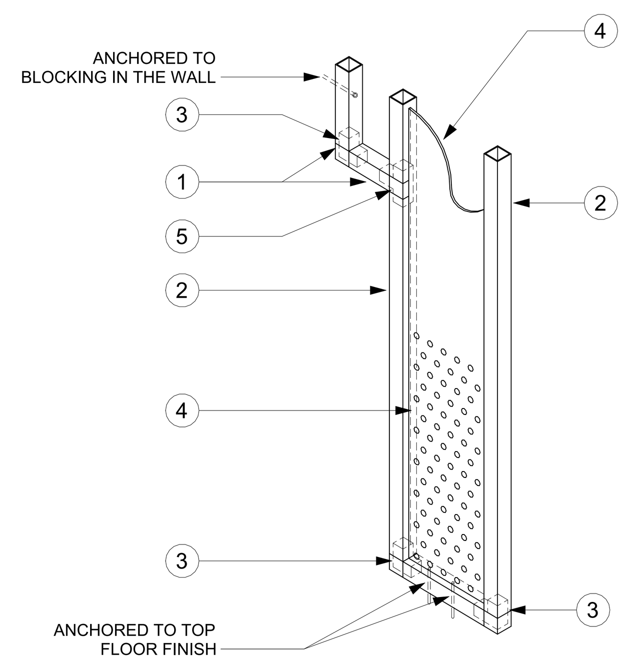

9 A761 — A 761_9 DETAIL
SCALE : 1 1/2" = 1'-0"

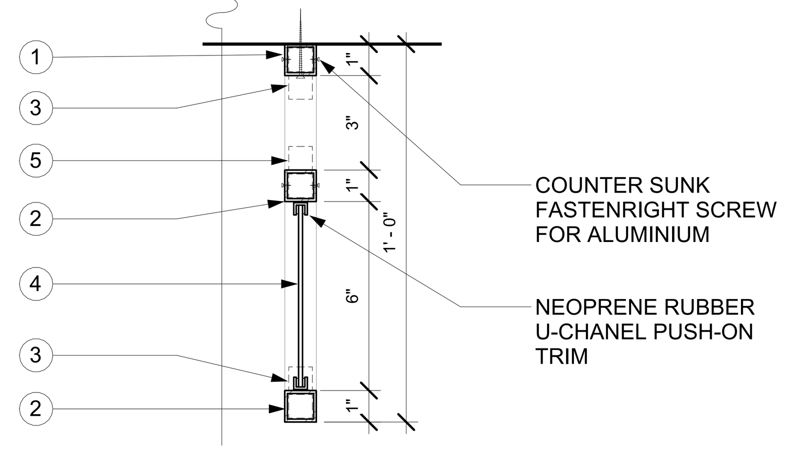

7 A761 — DETAIL: WALL PANEL CONNECTION
SCALE : 3" = 1'-0"

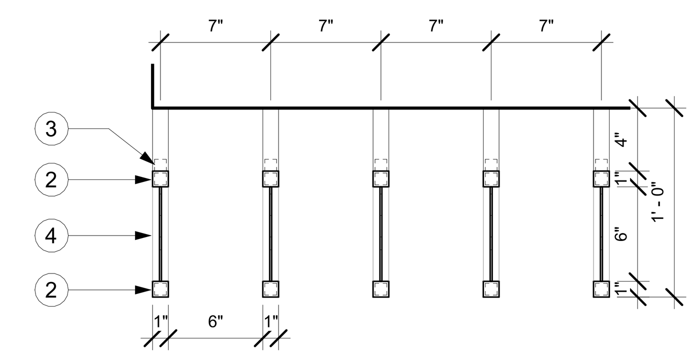

6 A761 — DETAIL: WALL PANELS
SCALE : 1 1/2" = 1'-0"

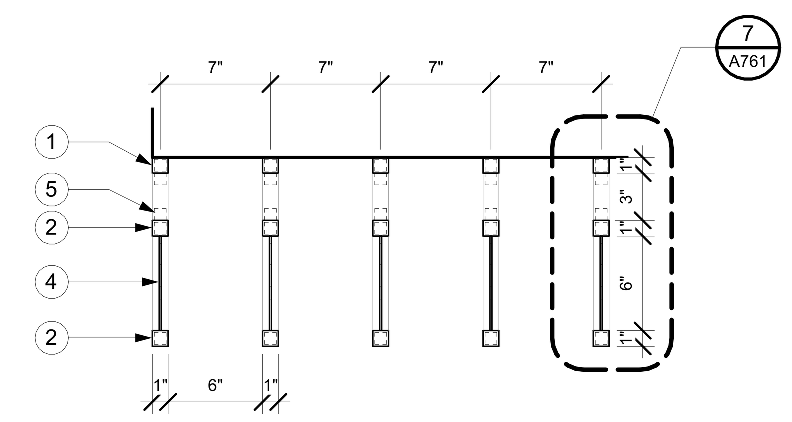

5 A761 — DETAIL: WALL PANELS
SCALE : 1 1/2" = 1'-0"

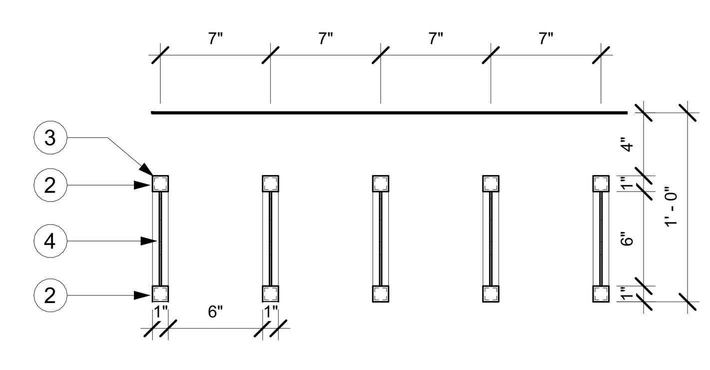

4 A761 — DETAIL: WALL PANELS
SCALE : 1 1/2" = 1'-0"

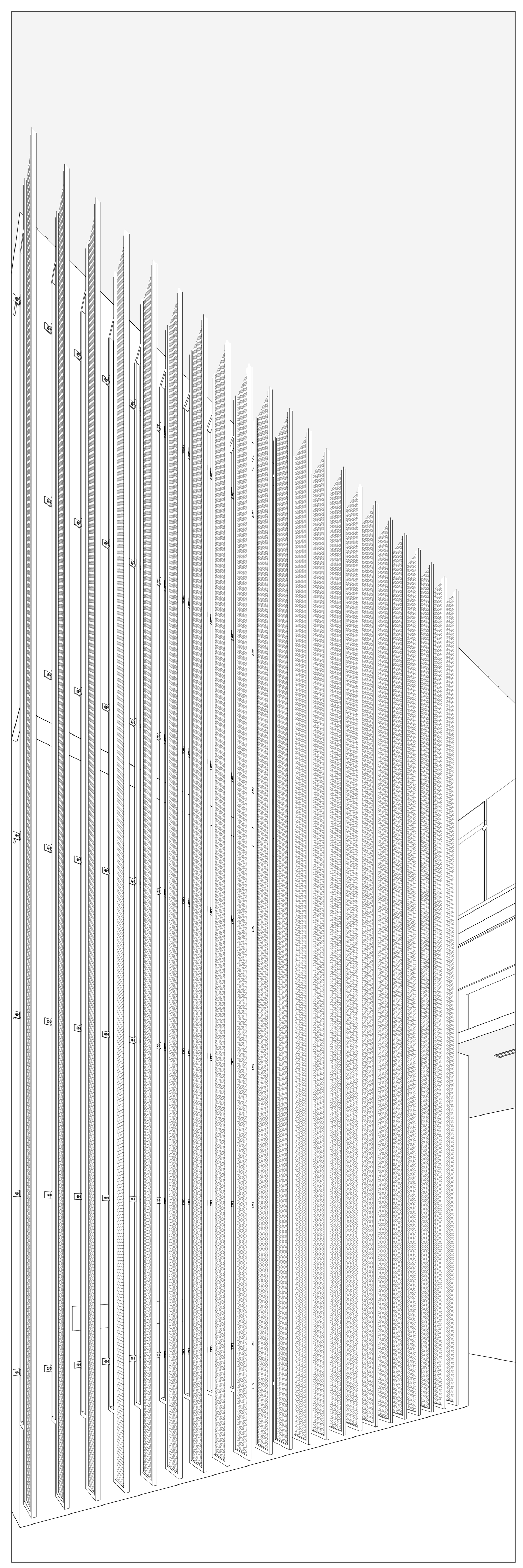

8 A761 — 3D VIEW: WEST WALL
SCALE :

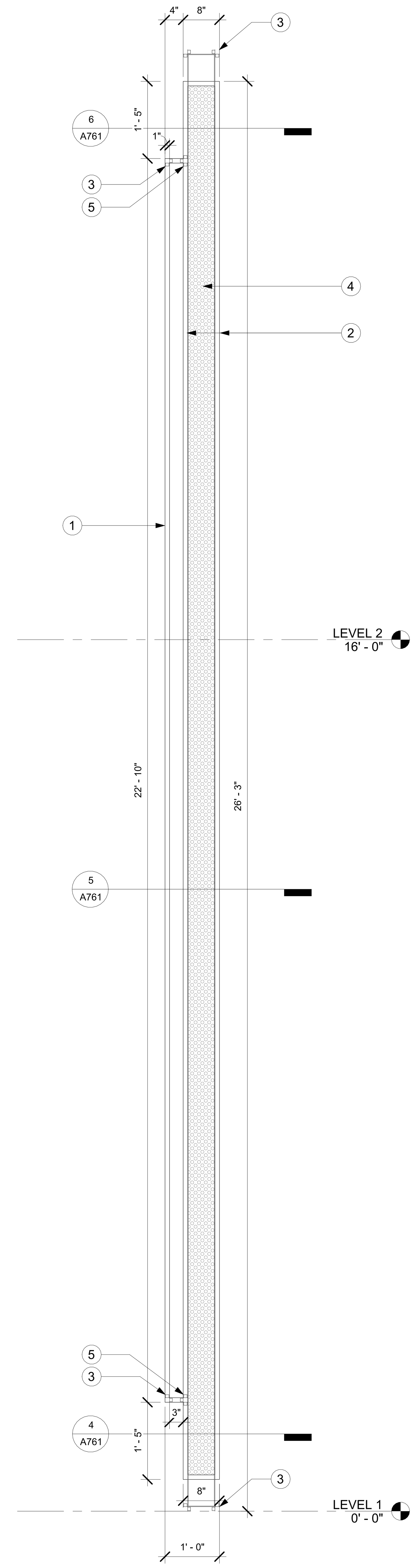

3 A761 — SECTION: LOBBY WEST WALL
SCALE : 3/4" = 1'-0"

LEGEND:

BASIS OF DESIGN: GRAINGER ITTEM" 186634 MODEL:9025-72/ OR EQUAL

1. SQUARE TUBE PROFILE: 1" X 1" , 12' NOM. LENGTH. BRAND: 80/20 FINISH: BRONZE ANODIZED
2. DOUBLE FLANGED SQUARE TUBE PROFILE: 1" X 1", 8'-0"/12'-0" NOM. LENGTH BRAND: 80/20 FINISH: BRONZE ANODIZED
3. 2 WAY CORNER CONNECTOR: 2 1/8" X 2 1/8" , 90° ELBOW, FINISH: BRONZE ANODIZED.
4. METAL DEPOT/ OR EQUAL : PERFORATTED ALUMINIUM SHEET - ROUND HOLES 3/8" @ 1" O.C DIAGONAL, FINISH: BRONZE
5. 3 WAY CORNER CONNECTOR: 2 1/8" X 2 1/8" 3-WAY CORNER CONNECTOR.

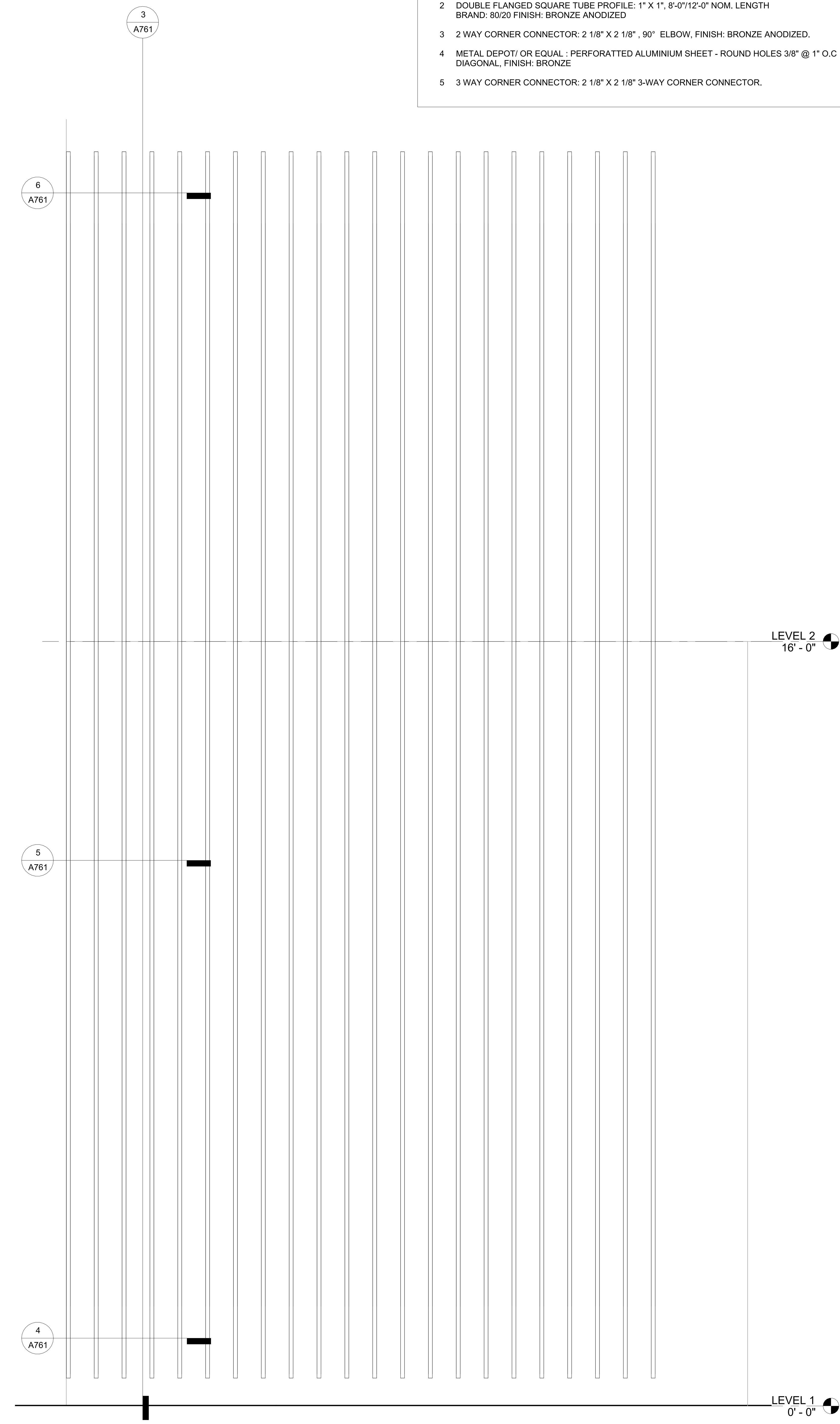

2 A761 — INT ELEV: LOBBY 100 VIEW WEST
SCALE : 3/4" = 1'-0"

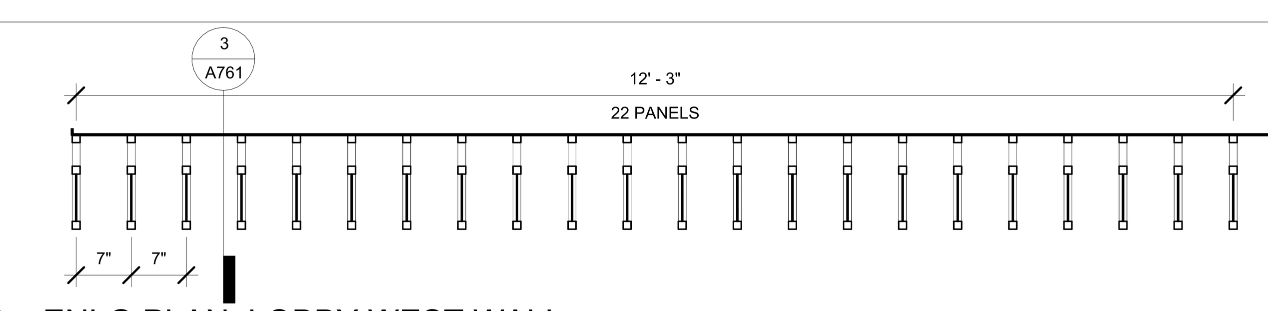

1 A761 — ENLG PLAN: LOBBY WEST WALL
SCALE : 3/4" = 1'-0"

FILE PATH: Autodesk Docs://FBC IT Building/FBIT_A23.rvt

PLOT DATE: 5/21/2024 5:22:47 PM

FSGROUP® ARCHITECTS
16575 Village Drive
Houston Texas 77040
713 344 1752 PH
fsdesignbuild.com

PROJECT NAME

INFORMATION TECHNOLGY BUILDING
1419 EUGENE HEIMANN CIRCLE
FORT BEND COUNTY . RICHMOND . TEXAS 77469

CONSULTANTS

PROFESSIONAL SEAL

ISSUED FOR
ISSUED FOR PROPOSALS AND PERMIT

REVISIONS

No.	DESCRIPTION	DATE

KEY PLAN

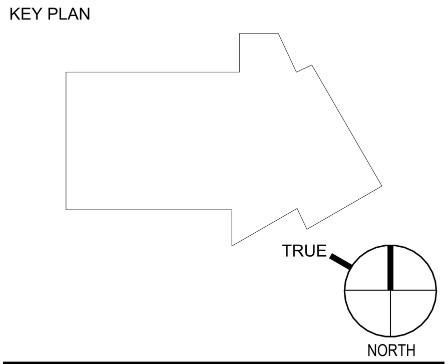

SHEET TITLE
INTERIOR ELEVATIONS ENLG LOBBY WEST WALL

SCALE: As indicated

DATE: 05/15/2024

PROJECT NUMBER: 2319

SHEET NUMBER: A761

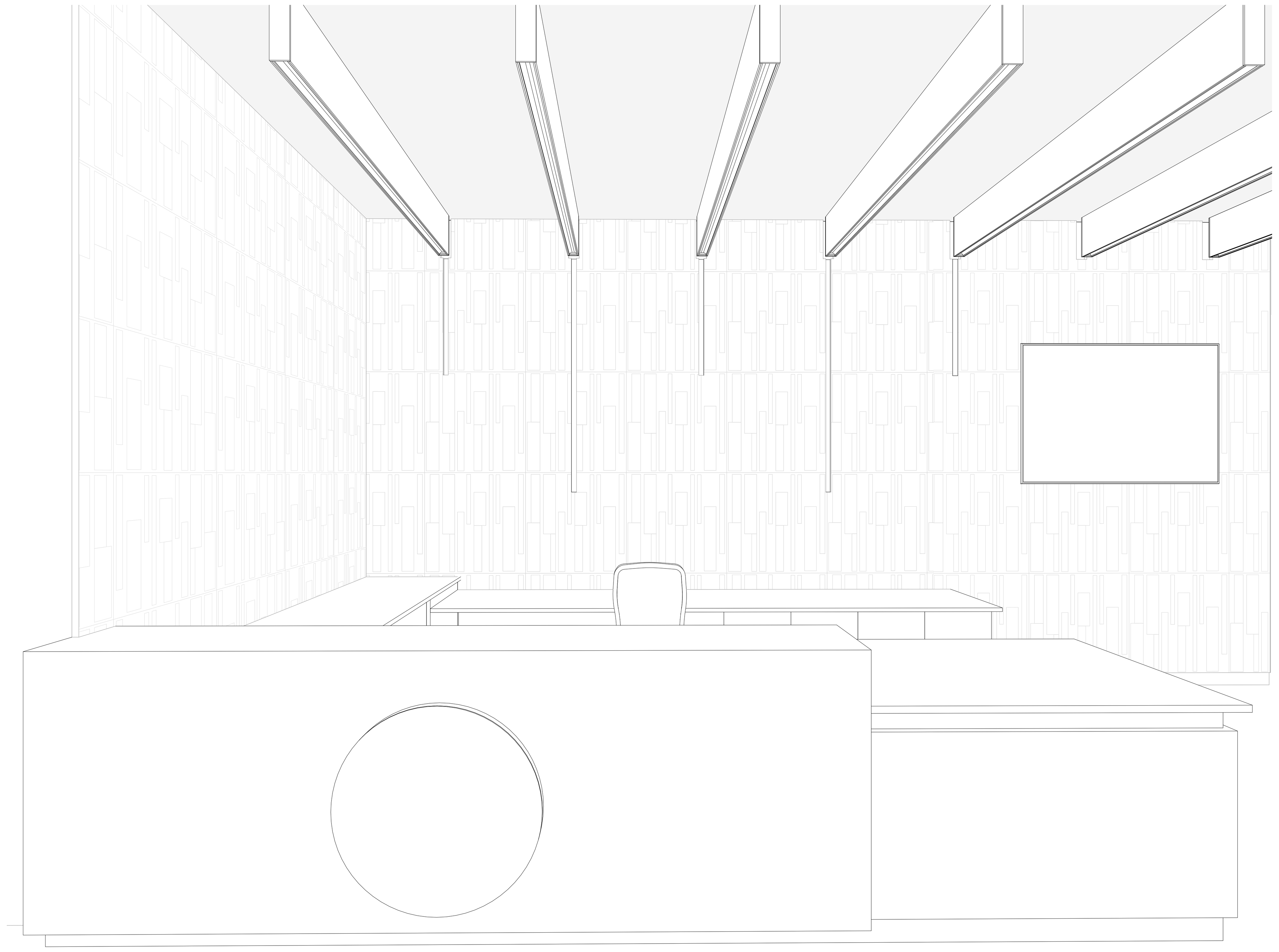

7 A800 3D VIEW: RECEPTION
SCALE :

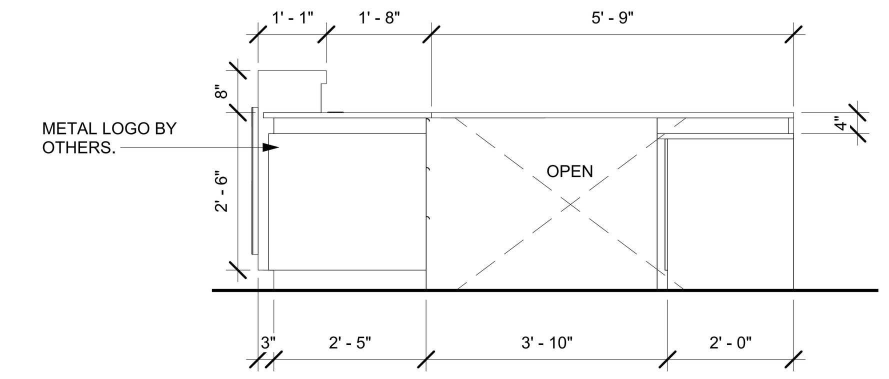

4 A800 ELEV: RECEPTION W SIDE
SCALE : 1/2" = 1'-0"

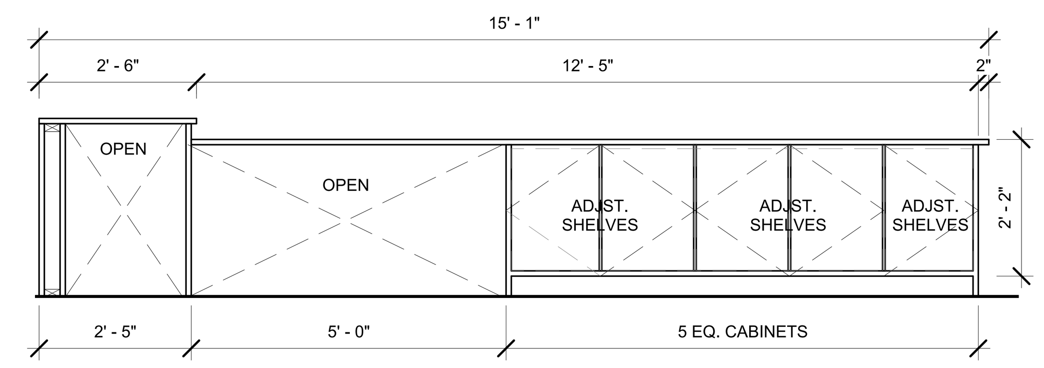

3 A800 SECTION: RECEPTION
SCALE : 1/2" = 1'-0"

6 A800 3D VIEW: RECEPTION
SCALE :

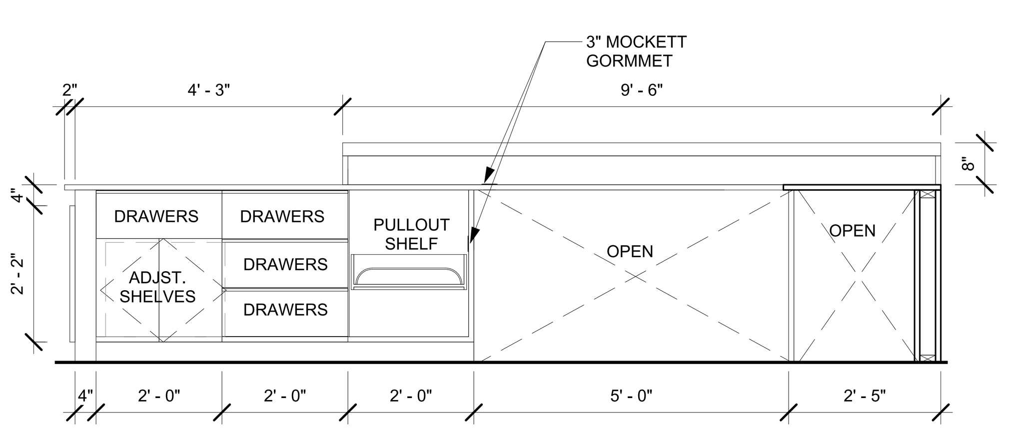

5 A800 SECTION: RECEPTION
SCALE : 1/2" = 1'-0"

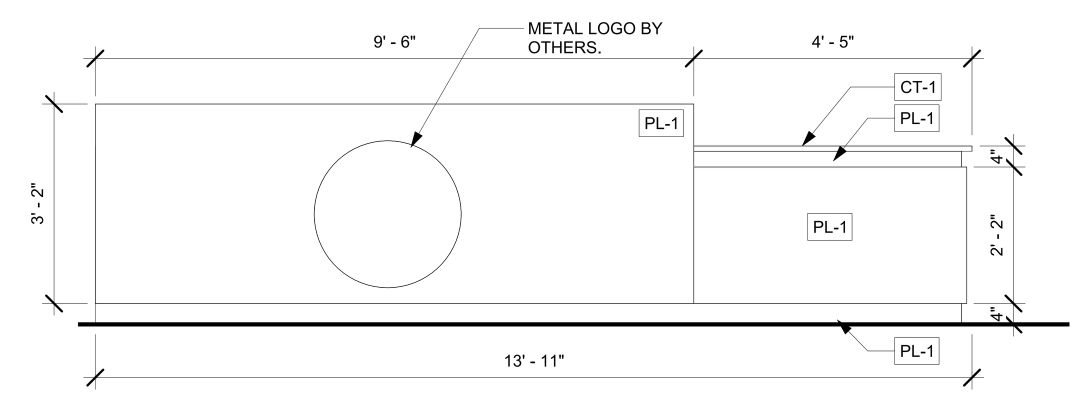

2 A800 ELEV: RECEPTION FRONT
SCALE : 1/2" = 1'-0"

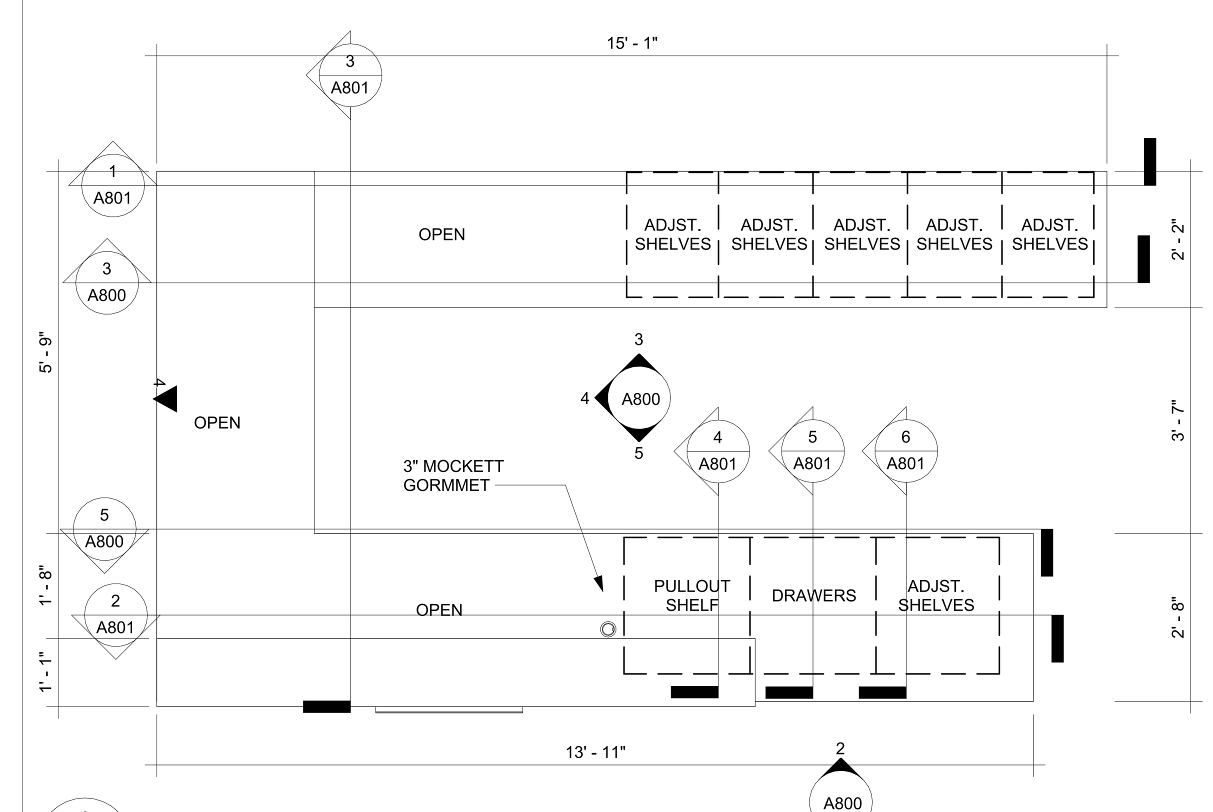

1 A800 ENLG PLAN: RECEPTION
SCALE : 1/2" = 1'-0"

PLOT DATE: 5/21/2024 5:23:08 PM
FILE PATH: Autodesk Docs://FBC IT Building/FBIT_A23.rvt

FSGROUP ARCHITECTS
16575 Village Drive
Houston Texas 77040
713 344 1752 PH
fsdesignbuild.com

PROJECT NAME
INFORMATION TECHNOLGY BUILDING
1419 EUGENE HEIMANN CIRCLE
FORT BEND COUNTY . RICHMOND . TEXAS 77469

CONSULTANTS

PROFESSIONAL SEAL
REGISTERED ARCHITECT FAKHRUDDIN 'N' SABIR 22631 STATE OF TEXAS
5/15/2024

ISSUED FOR
ISSUED FOR PROPOSALS AND PERMIT

REVISIONS

No.	DESCRIPTION	DATE

KEY PLAN

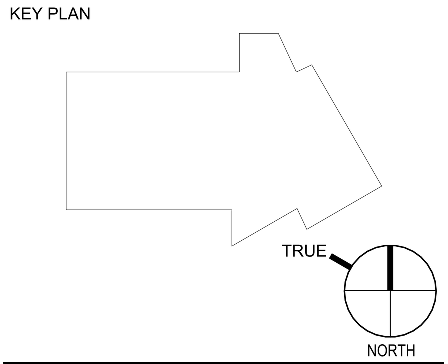

SHEET TITLE
CASEWORK - RECEPTION DESK

SCALE 1/2" = 1'-0"
DATE 05/15/2024
PROJECT NUMBER 2319
SHEET NUMBER
A800

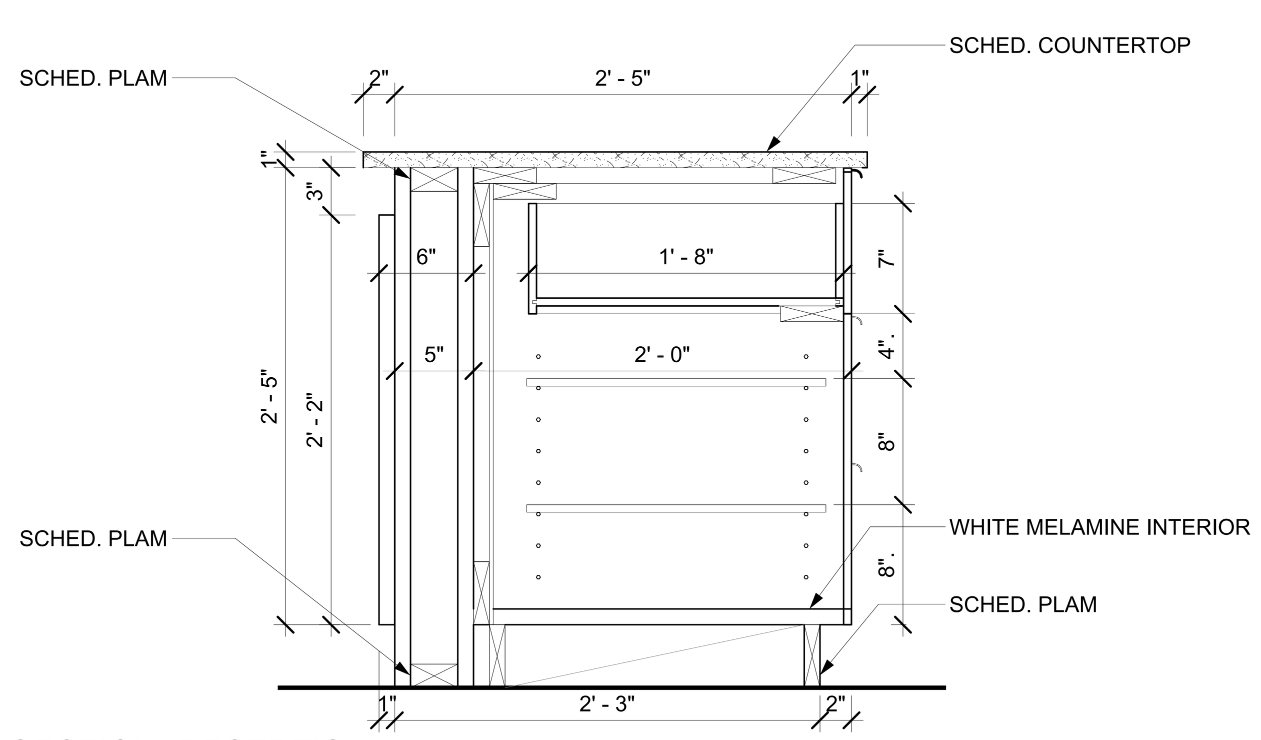

6 A801 SECTION: RECEPTION
SCALE : 1 1/2" = 1'-0"

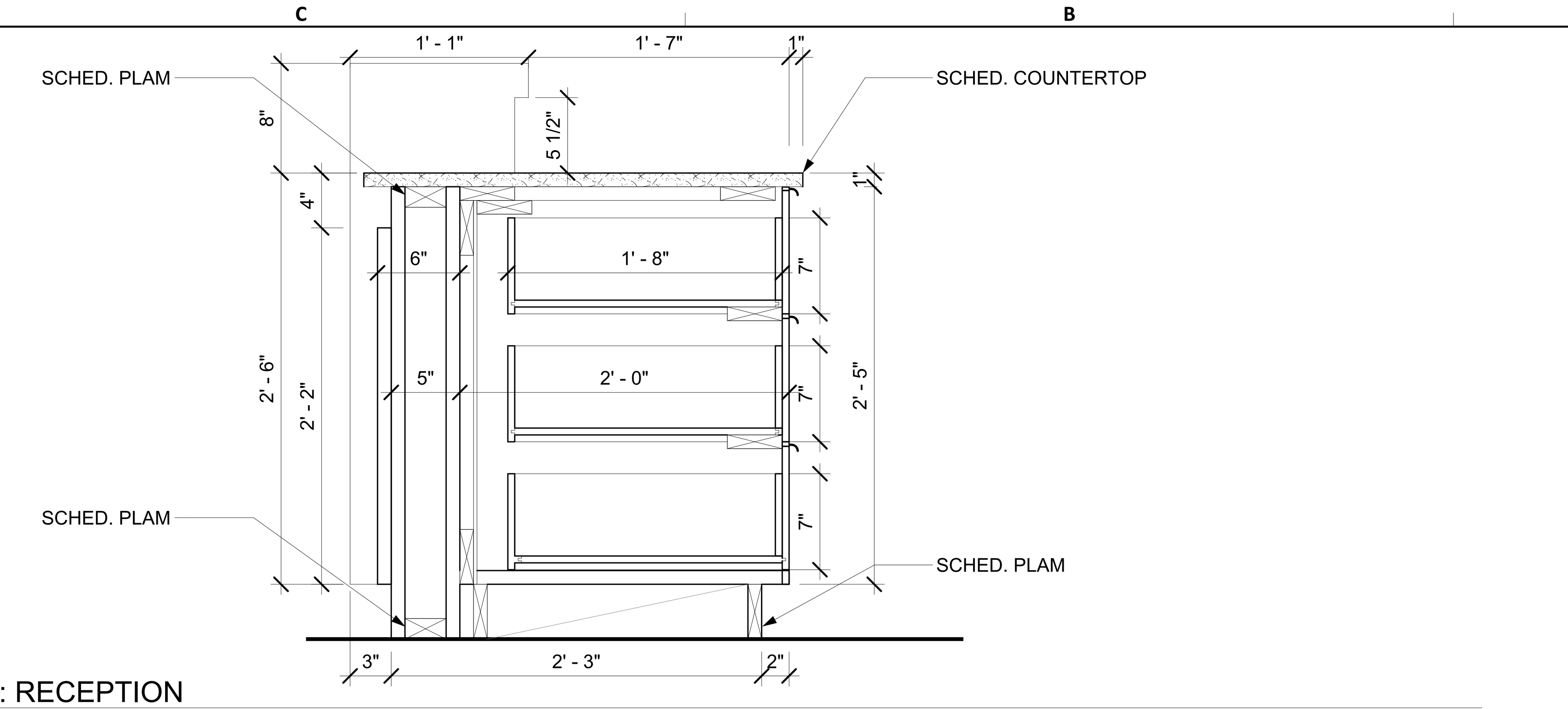

5 A801 SECTION: RECEPTION
SCALE : 1 1/2" = 1'-0"

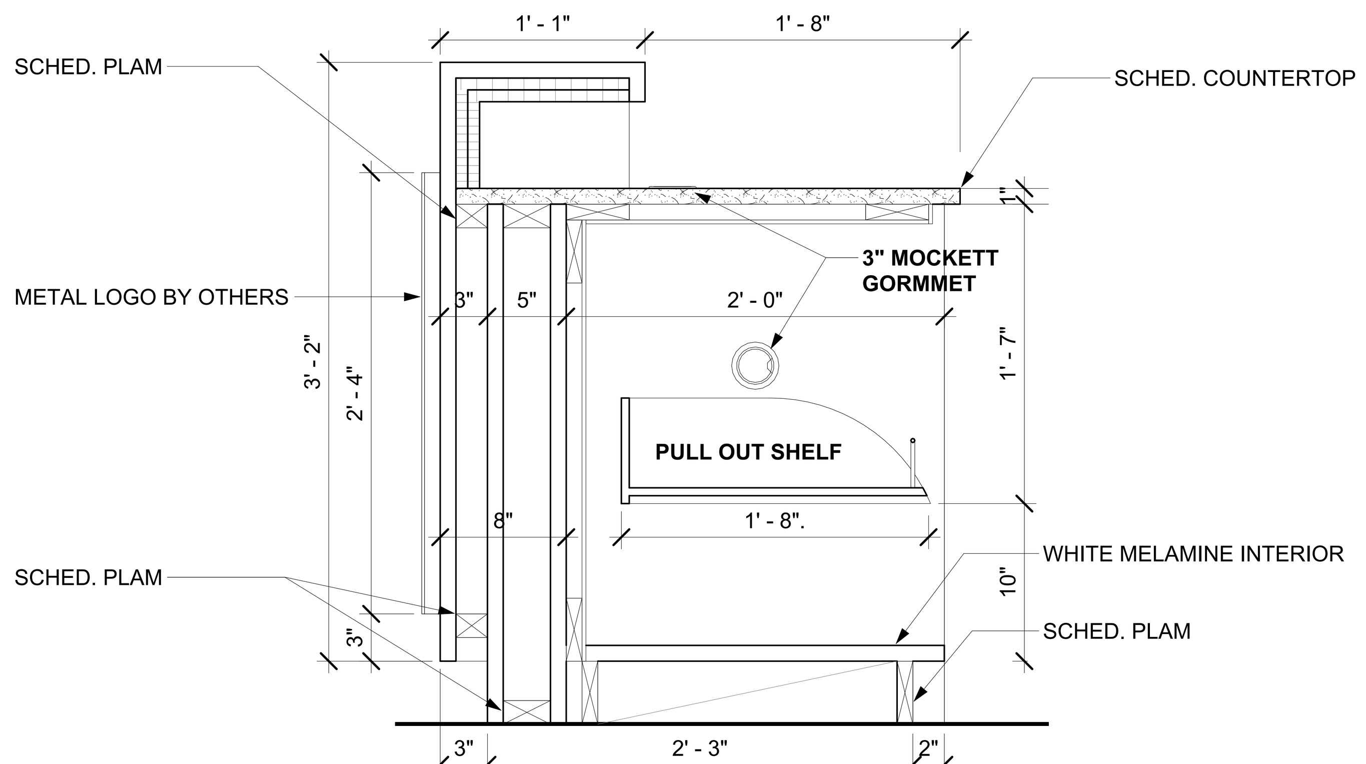

4 A801 SECTION: RECEPTION
SCALE : 1 1/2" = 1'-0"

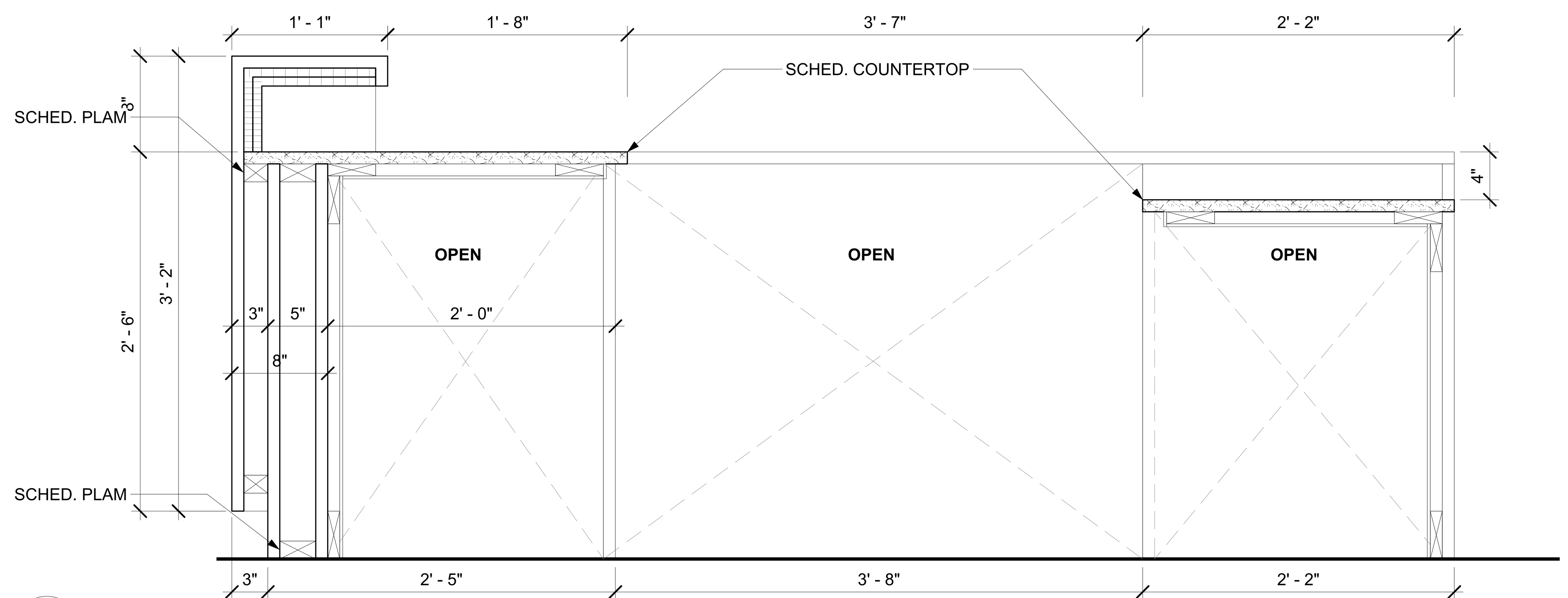

3 A801 SECTION: RECEPTION
SCALE : 1 1/2" = 1'-0"

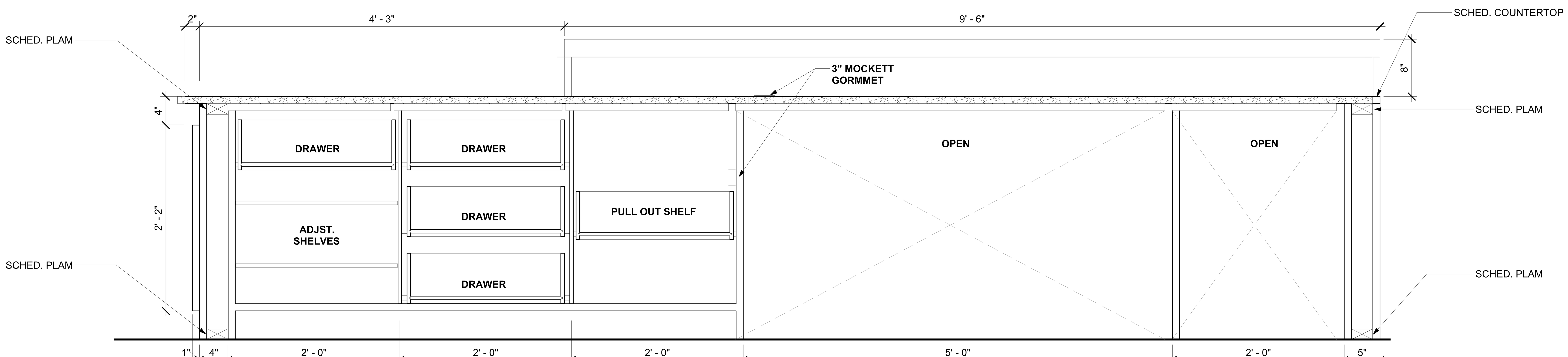

2 A801 SECTION: RECEPTION
SCALE : 1 1/2" = 1'-0"

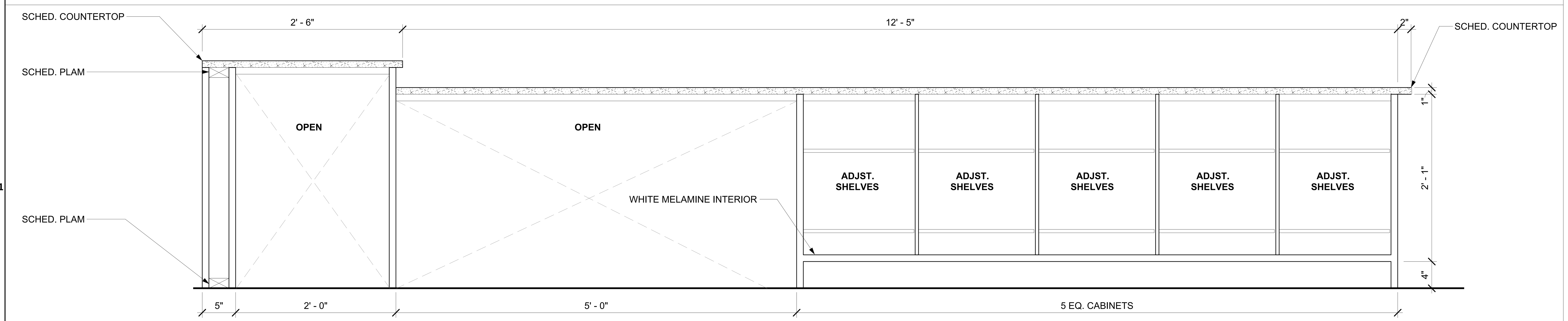

1 A801 SECTION: RECEPTION
SCALE : 1 1/2" = 1'-0"

FILE PATH: Autodesk Docs://FBC IT Building/FBIT_A23.rvt
PLOT DATE: 5/21/2024 5:23:22 PM

FSGROUP®
ARCHITECTS
16575 Village Drive
Houston Texas 77040
713 344 1752 PH
fsdesignbuild.com

PROJECT NAME

INFORMATION TECHNOLGY BUILDING
1419 EUGENE HEIMANN CIRCLE
FORT BEND COUNTY . RICHMOND . TEXAS 77469

CONSULTANTS

PROFESSIONAL SEAL

REGISTERED ARCHITECT
FAKHRUDDIN 'N' SABIR
22631
STATE OF TEXAS
5/15/2024

ISSUED FOR
ISSUED FOR PROPOSALS AND PERMIT

REVISIONS

No.	DESCRIPTION	DATE

KEY PLAN

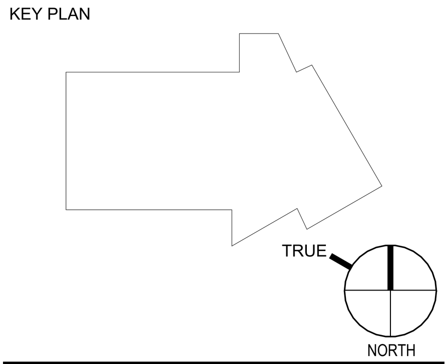

SHEET TITLE
CASEWORK - RECEPTION DESK

SCALE 1 1/2" = 1'-0"

DATE 05/15/2024

PROJECT NUMBER 2319

SHEET NUMBER
A801

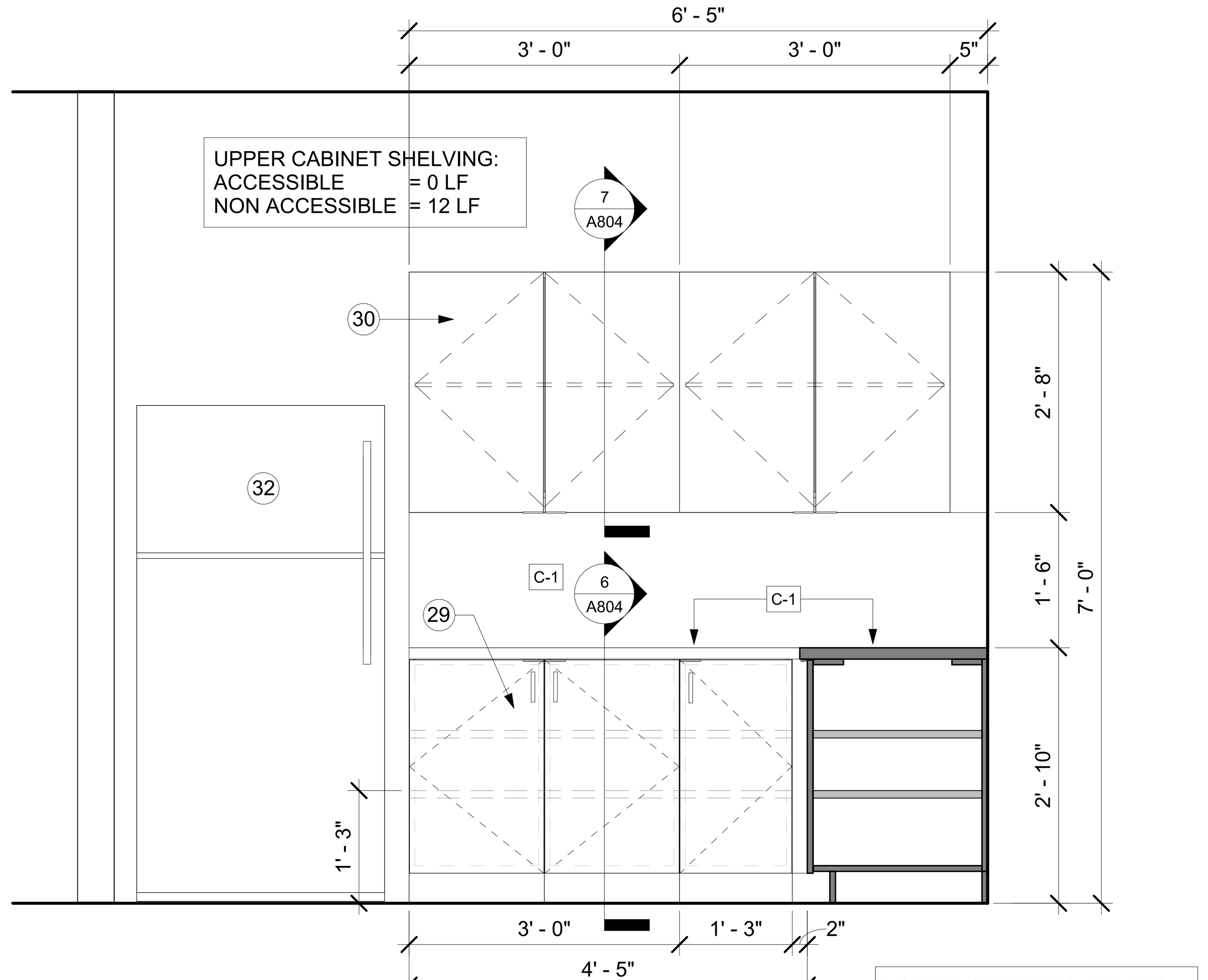

LOWER CABINET SHELVING:
ACCESSIBLE = 8.5 LF
NON ACCESSIBLE = 4.25 LF

9 A802 ELEV: MILLWORK BREAKROOM 345 NORTH
SCALE : 3/4" = 1'-0"

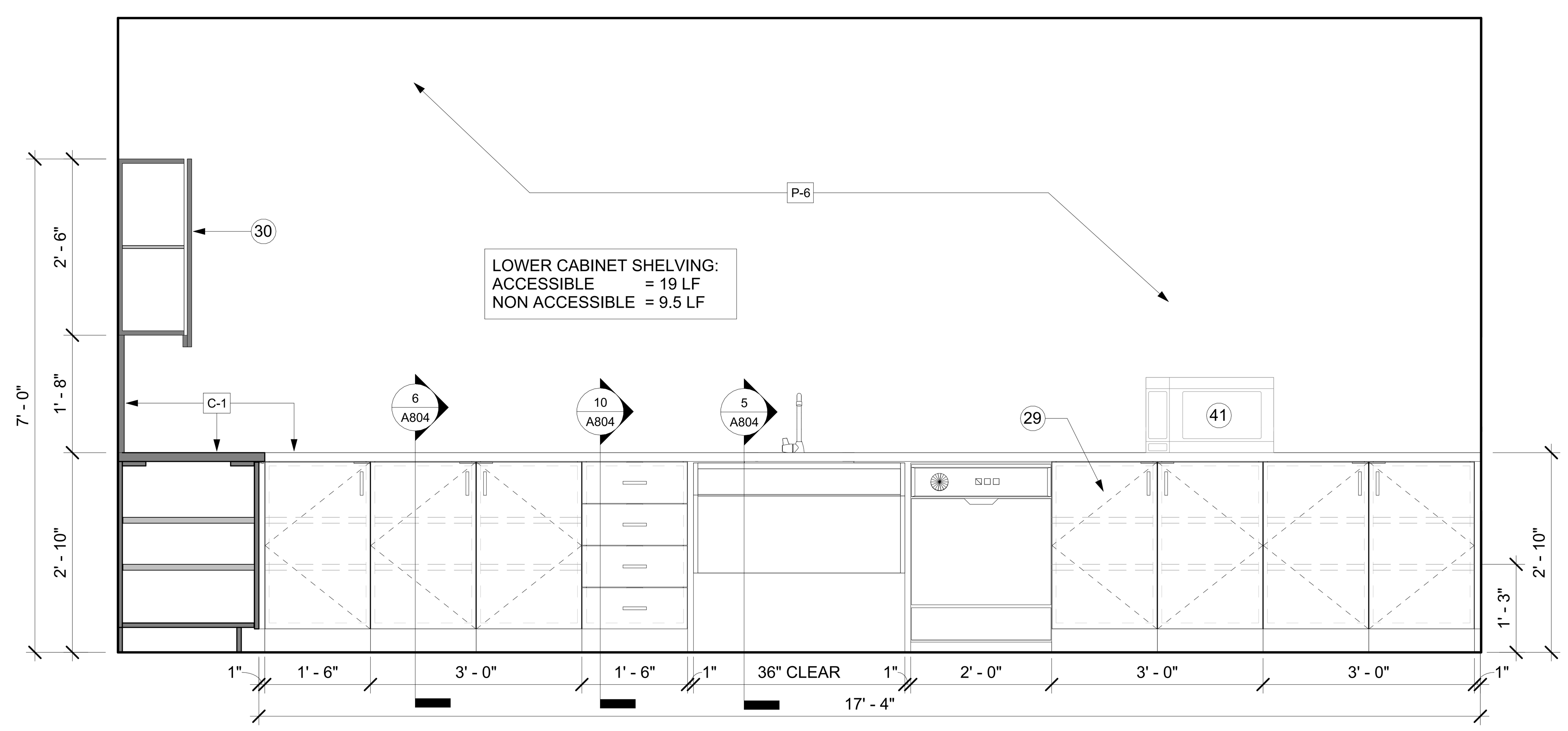

6 A802 ELEV: MILLWORK BREAKROOM 345 EAST
SCALE : 3/4" = 1'-0"

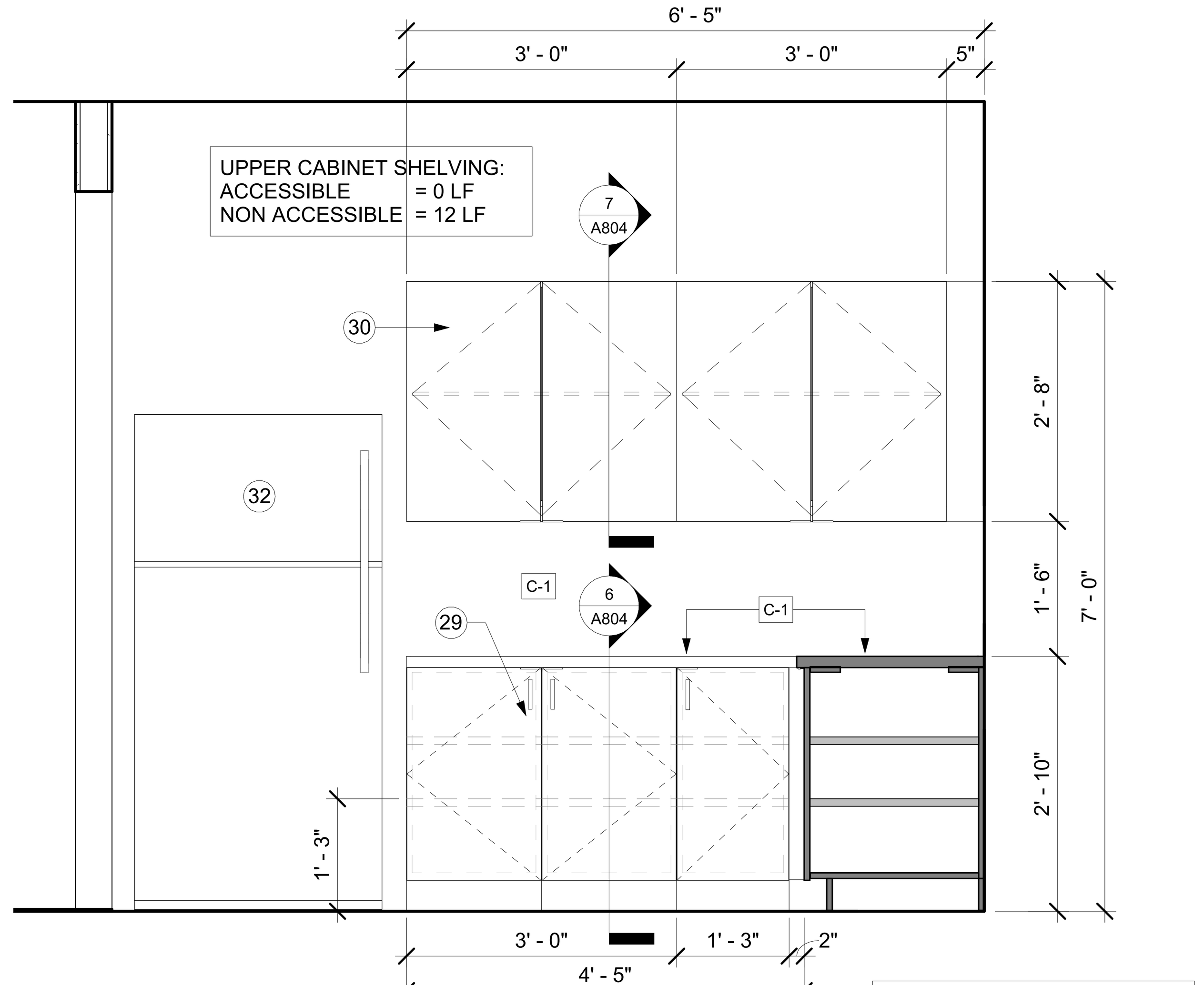

LOWER CABINET SHELVING:
ACCESSIBLE = 8.5 LF
NON ACCESSIBLE = 4.25 LF

8 A802 ELEV: MILLWORK BREAKROOM 245 NORTH
SCALE : 3/4" = 1'-0"

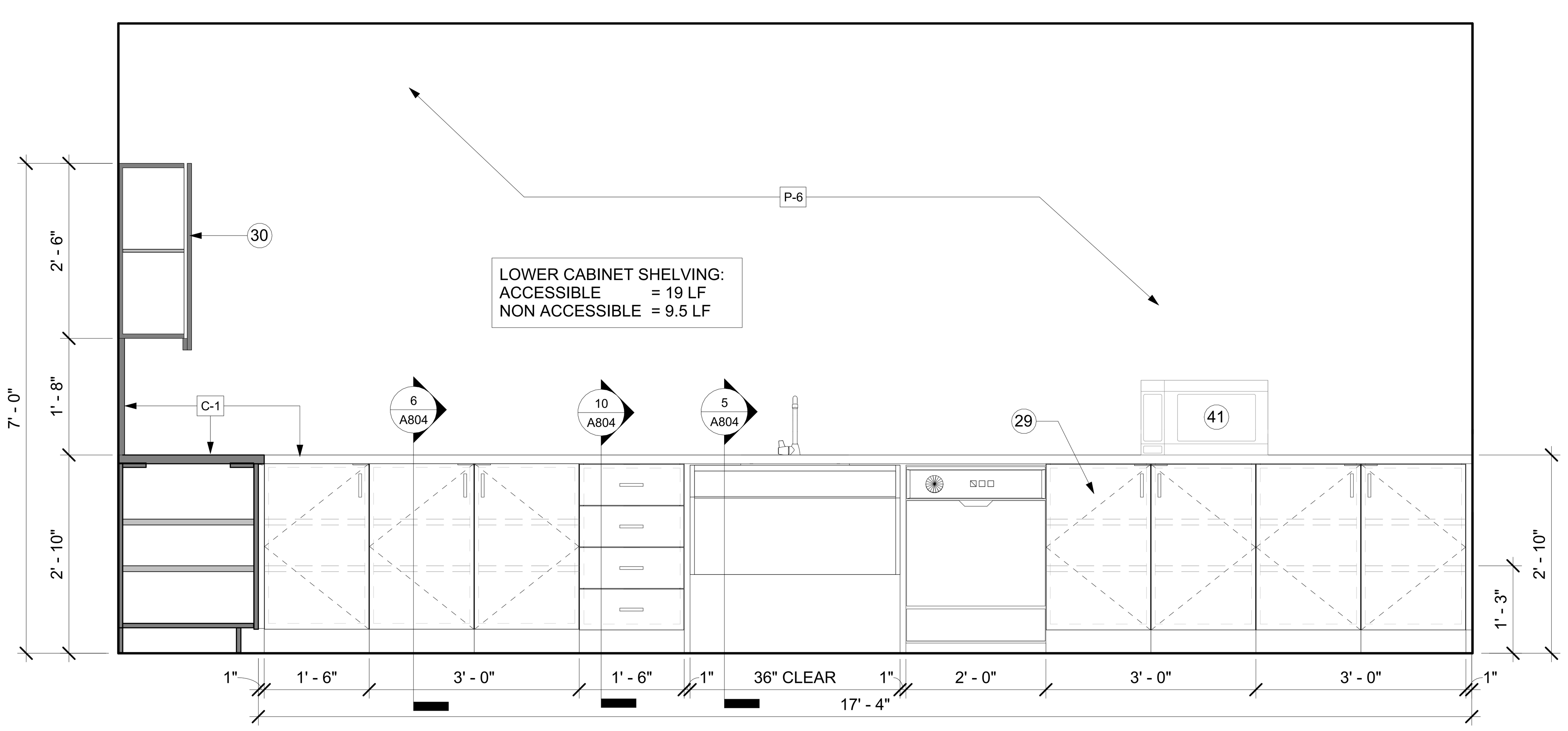

5 A802 ELEV: MILLWORK BREAKROOM 245 EAST
SCALE : 3/4" = 1'-0"

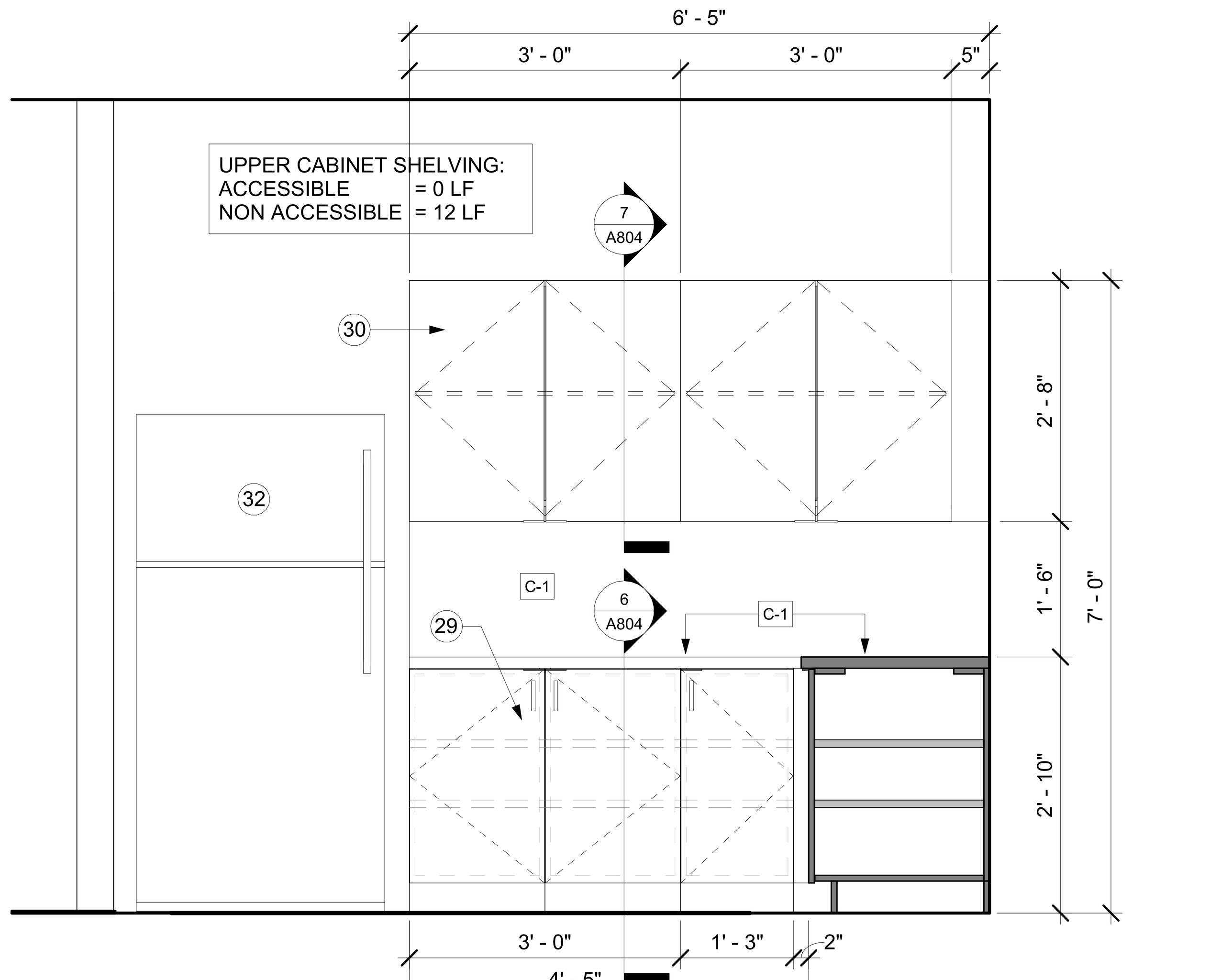

LOWER CABINET SHELVING:
ACCESSIBLE = 8.5 LF
NON ACCESSIBLE = 4.25 LF

7 A802 ELEV: MILLWORK BREAKROOM 145 NORTH
SCALE : 3/4" = 1'-0"

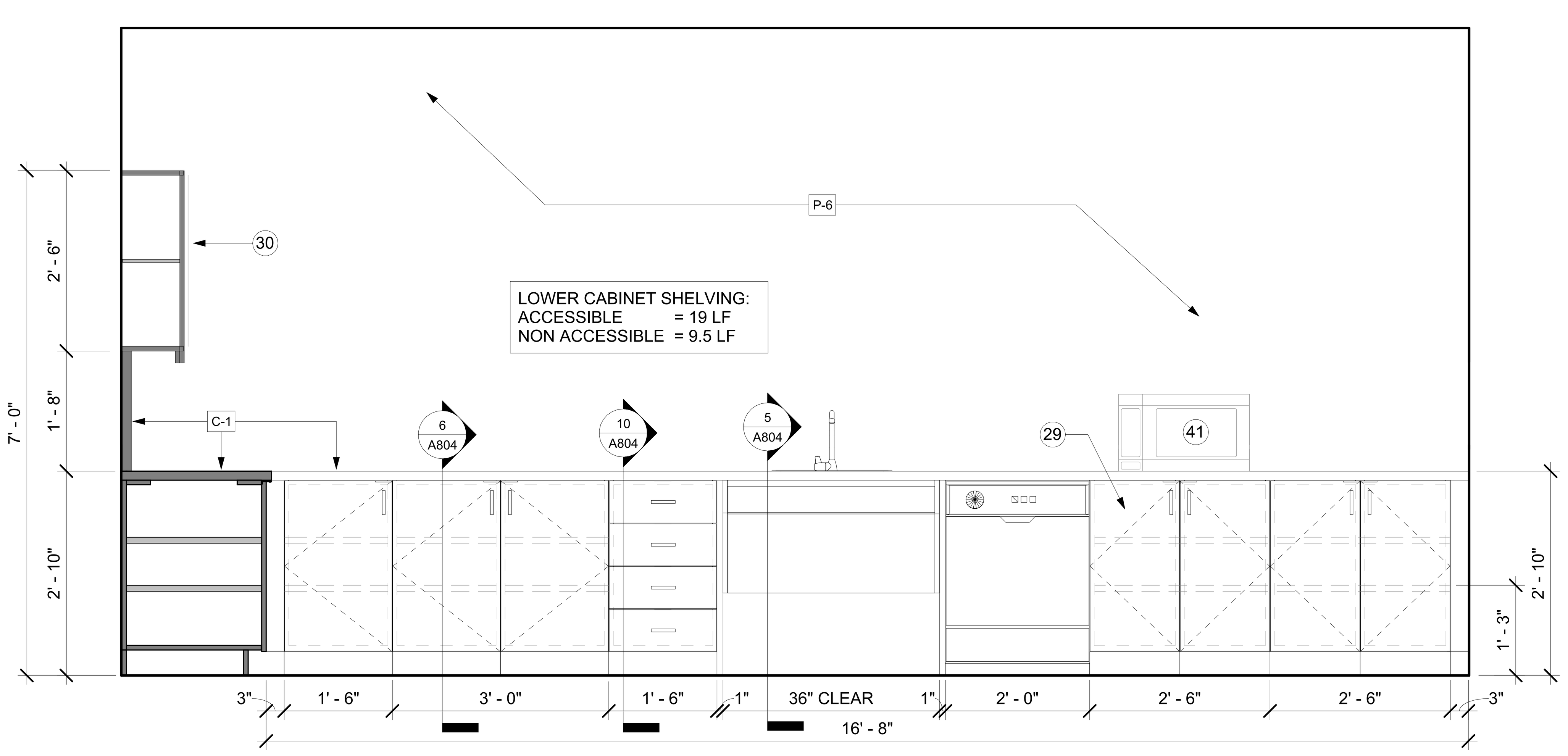

4 A802 ELEV: MILLWORK BREAKROOM 145 EAST
SCALE : 3/4" = 1'-0"

GENERAL NOTES: RESTROOMS & BREAK ROOMS

A. FINISH SCHEDULE & LEGEND REFER TO A900 & A901.

B. WALL PARTITION TYPES REFER TO A950.

C. RESTROOMS AT OFFICE BUILDING, PERIMETER WALLS (GYP & METAL STUD) TO GO TO UNDERSIDE OF DECK AND PROVIDE ACOUSTICAL BATT INSULATION.

D. COORDINATE INSTALLATION OF REQUIRED BLOCKING AND STABALIZING FOR FIXTURES.

E. THE STRUCTURAL STRENGTH OF GRAB BARS AT ACCESSIBLE WATER CLOSETS SHALL COMPLY WITH TEXAS ACCESSIBILTY STANDARDS 2012.

F. FURNSIH & INSTALL KITCHEN APPLIANCES AT BREAK ROOMS AS NOTED.

KEY NOTES: RESTROOMS & BREAK ROOMS 1

1 WALL MOUNTED TOILET ACCESSIBLE
2 WALL MOUNTED TOILET
3 WALL MOUNTED URINAL ACCESSIBLE
4 WALL MOUNTED URINAL
5 URINAL PARTITION T-10
6 PHENOLIC TOILET PARTITION T-10
7 CLOTHES HOOK T-05
8 36" GRAB BAR T-03
9 42" GRAB BAR T-04
10 TOILET PAPER DISPENSER T-01
11 SEAT COVER DISPENSER T-02
12 SANITARY NAPKIN DISPOSAL T-06
13 HI-LOW DRINKING FOUNTAIN WITH BOTTLE FILLER
14 PRIVACY GLASS
15 SEMI-RECESSED PAPER TOWEL DISPENSER T-07
16 SOAP DISPENSER T-08
17 MIRROR T-09
18 SOLID SURFACE COUNTERTOP
19 LAVATORY SINK UNDERMONT AT COUNTER
20 CANE APRON ACCESSORY
21 LINEAR SHOWER DRAIN
22 24" GRAB BAR
23 48" GRAB BAR
24 FOLDING SHOWER SEAT T-11
25 HANDHELD SHOWER SYSTEM
26 ALUMINUM CORNER GUARD FULL HEIGHT
27 ALUMINUM END CAP FULL HEIGHT
28 FURNITURE
29 BASE CABINET
30 UPPER CABINET
31 JANITOR'S SINK
32 REFRIGERATOR: FURNISH & INSTALL GE 21.9 CF TOP FREEZER REFRIGERATOR WHITE GTS22KGNRWW.
33 GYPSUM BOARD FURR-DOWN HEADER
34 OFFICE EQUIPMENT
35 GYM EQUIPMENT
36 STRUCTURAL BRACE FRAME RE: STRUCTURAL
37 PIPE PROTECTION
38 PROTECTIVE COVER UNDER LAVATORY
39 HAND SINK & VANITY UNIT, WALL MOUNTED BASIS OF DESIGN: SINK 43003L01 AVENTO & VANITY A87600 AVENTO BY VILLEROY & BOCH
40 DRINKING FOUNTAIN FILTERED WATER FILLER AT SINK
41 MICROWAVE: FURNISH & INSTALL GE 1.4 CF COUNTER TOP MICROWAVE OVEN WHITE JES1460DSWW.
42 DISHWASHER: FURNISH AND INSTALL GE GDT225SGLWW

TOTAL CABINET SHELVING LENGTH EACH BREAK ROOM:

ACCESSIBLE	= 27.5 LF	= 51.6%
NON ACCESSIBLE	= 25.75 LF	= 48.4%
TOTAL	= 53.25 LF	= 100%

FSGROUP® ARCHITECTS
16575 Village Drive
Houston Texas 77040
713 344 1752 PH
fsdesignbuild.com

PROJECT NAME

INFORMATION TECHNOLGY BUILDING
1419 EUGENE HEIMANN CIRCLE
FORT BEND COUNTY . RICHMOND . TEXAS 77469

CONSULTANTS

PROFESSIONAL SEAL

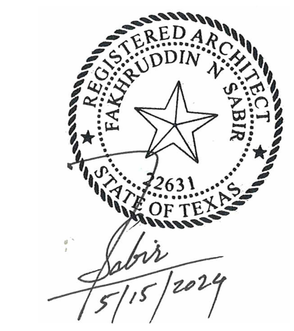

ISSUED FOR
ISSUED FOR PROPOSALS AND PERMIT

REVISIONS

No.	DESCRIPTION	DATE

KEY PLAN

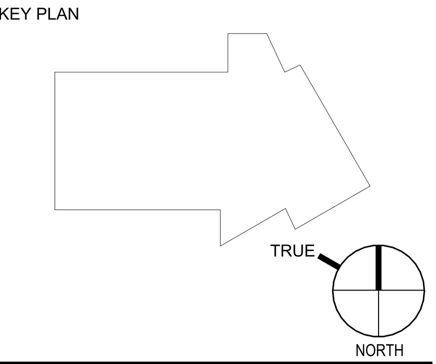

SHEET TITLE
CASEWORK - BREAKROOM

SCALE As indicated
DATE 05/15/2024
PROJECT NUMBER 2319
SHEET NUMBER
A802

FILE PATH: Autodesk Docs://FBC IT Building/FBIT_A23.rvt
PLOT DATE: 5/22/2024 5:29:58 PM

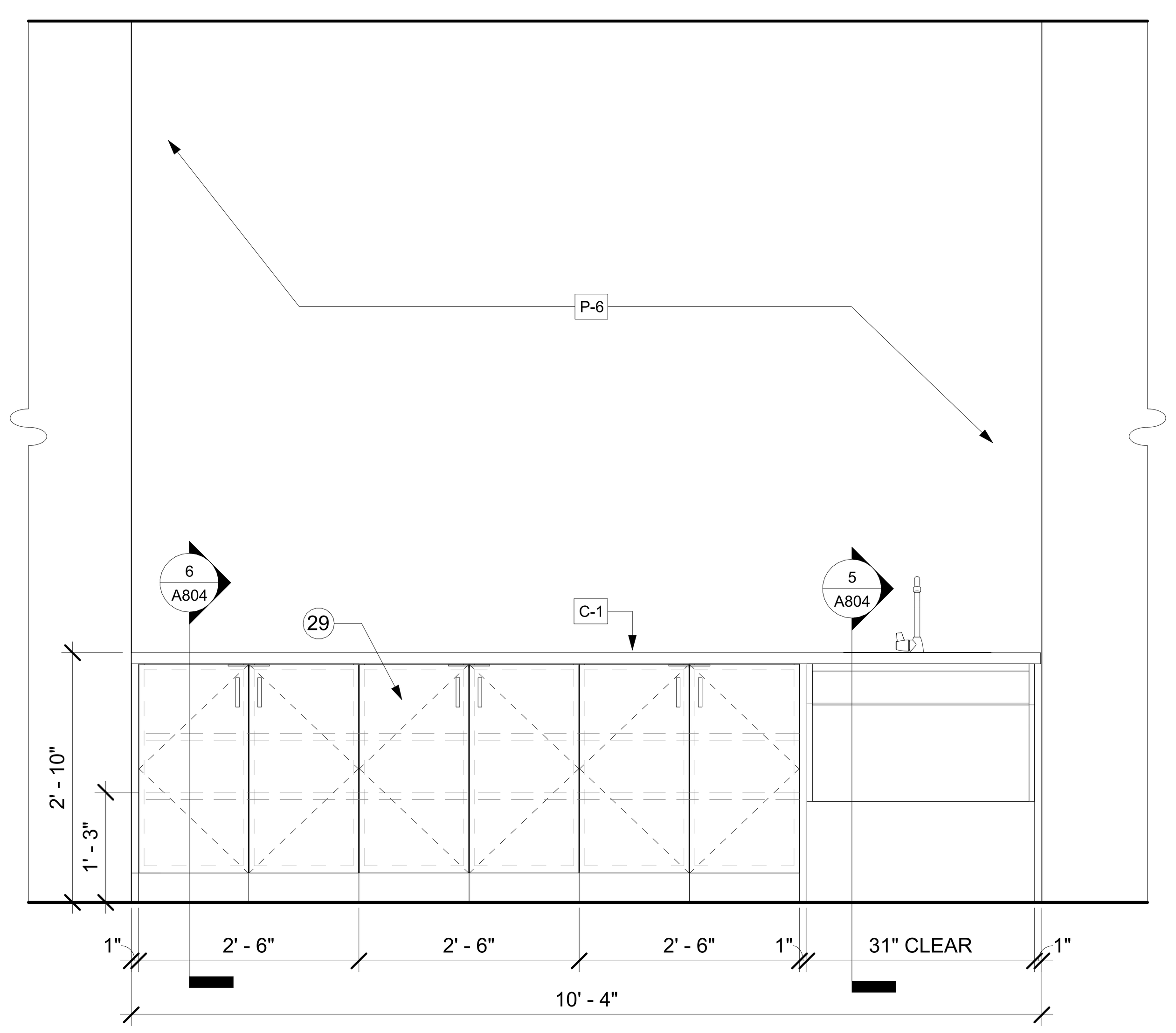

16
A803
ELEV: COFFEE BAR 302
SCALE : 3/4" = 1'-0"

LOWER CABINET SHELVING:		
ACCESSIBLE	= 15 LF	= 66.7%
NON ACCESSIBLE	= 7.5 LF	= 33.3%
TOTAL	= 22.5 LF	= 100%

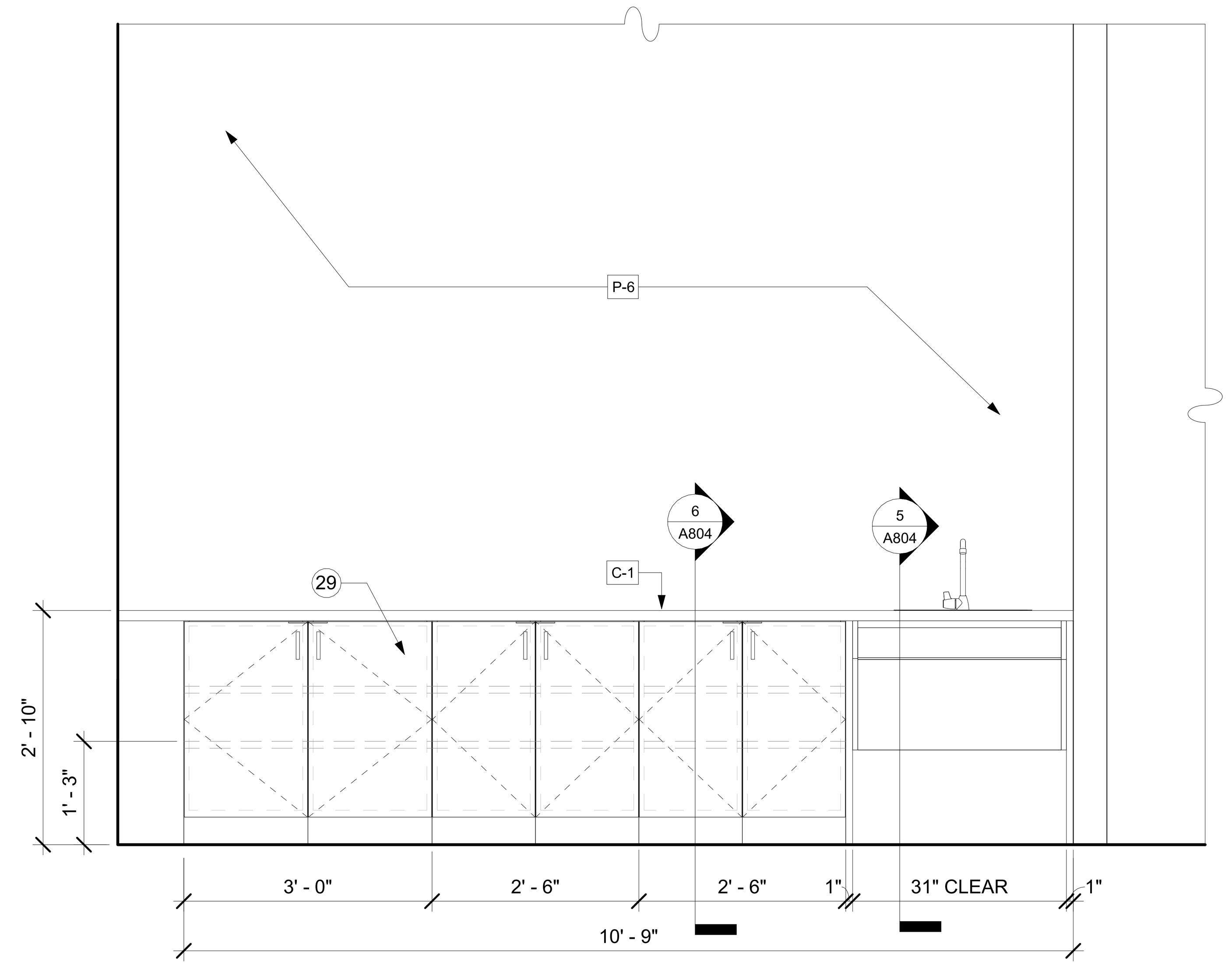

8
A803
ELEV: COFFEE BAR 202
SCALE : 3/4" = 1'-0"

LOWER CABINET SHELVING:		
ACCESSIBLE	= 16 LF	= 66.7%
NON ACCESSIBLE	= 8 LF	= 33.3%
TOTAL	= 24 LF	= 100%

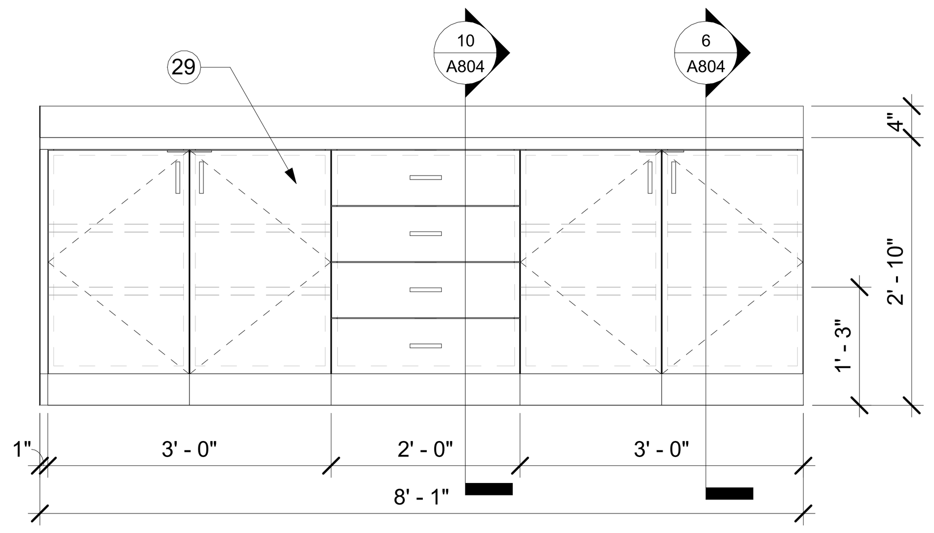

15
A803
ELEV: WORK ROOM NORTH (330)
SCALE : 3/4" = 1'-0"

LOWER CABINET SHELVING:		
ACCESSIBLE	= 16 LF	= 61.5%
NON ACCESSIBLE	= 10 LF	= 38.5%
TOTAL	= 26 LF	= 100%

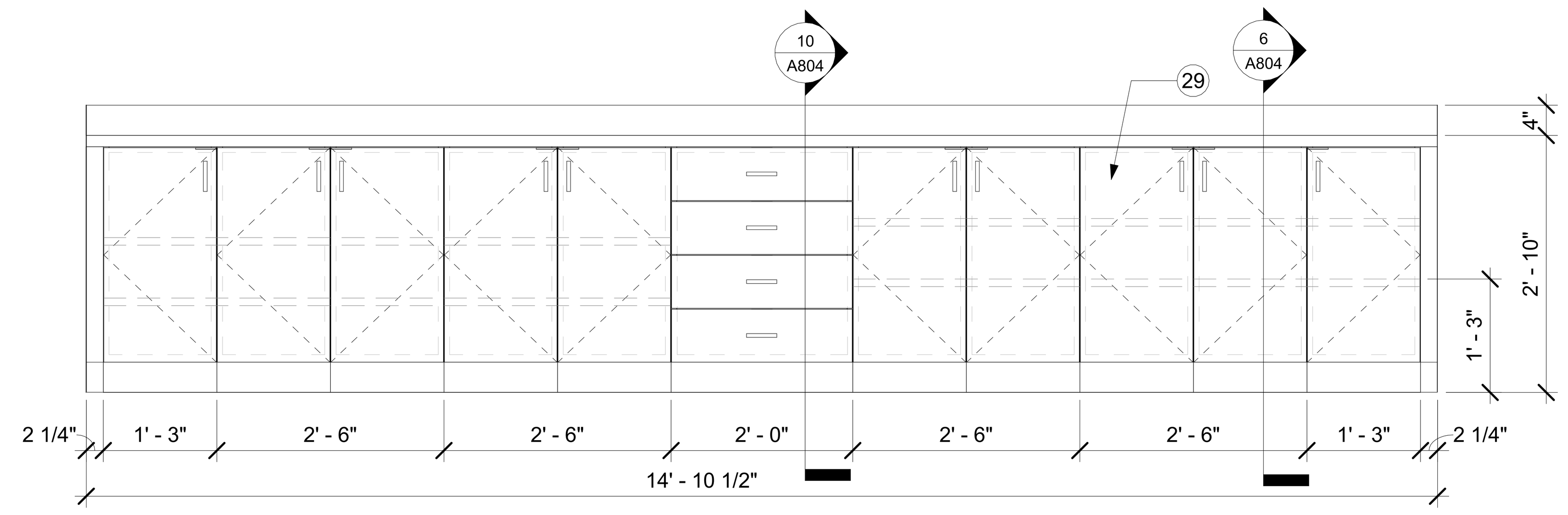

7
A803
ELEV: WORK ROOM SOUTH (330)
SCALE : 3/4" = 1'-0"

LOWER CABINET SHELVING:		
ACCESSIBLE	= 29 LF	= 63.7%
NON ACCESSIBLE	= 16.5 LF	= 36.3%
TOTAL	= 45.5 LF	= 100%

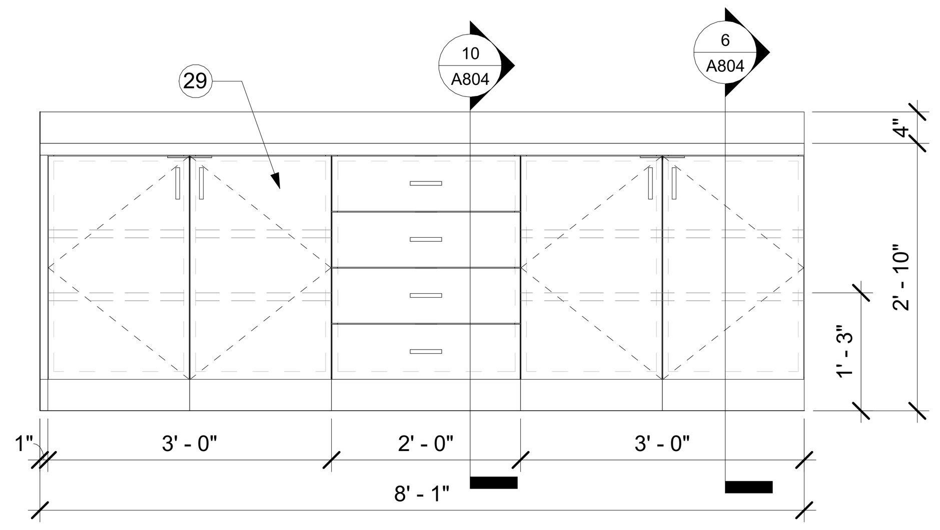

14
A803
ELEV: WORK ROOM NORTH (230)
SCALE : 3/4" = 1'-0"

LOWER CABINET SHELVING:		
ACCESSIBLE	= 16 LF	= 61.5%
NON ACCESSIBLE	= 10 LF	= 38.5%
TOTAL	= 26 LF	= 100%

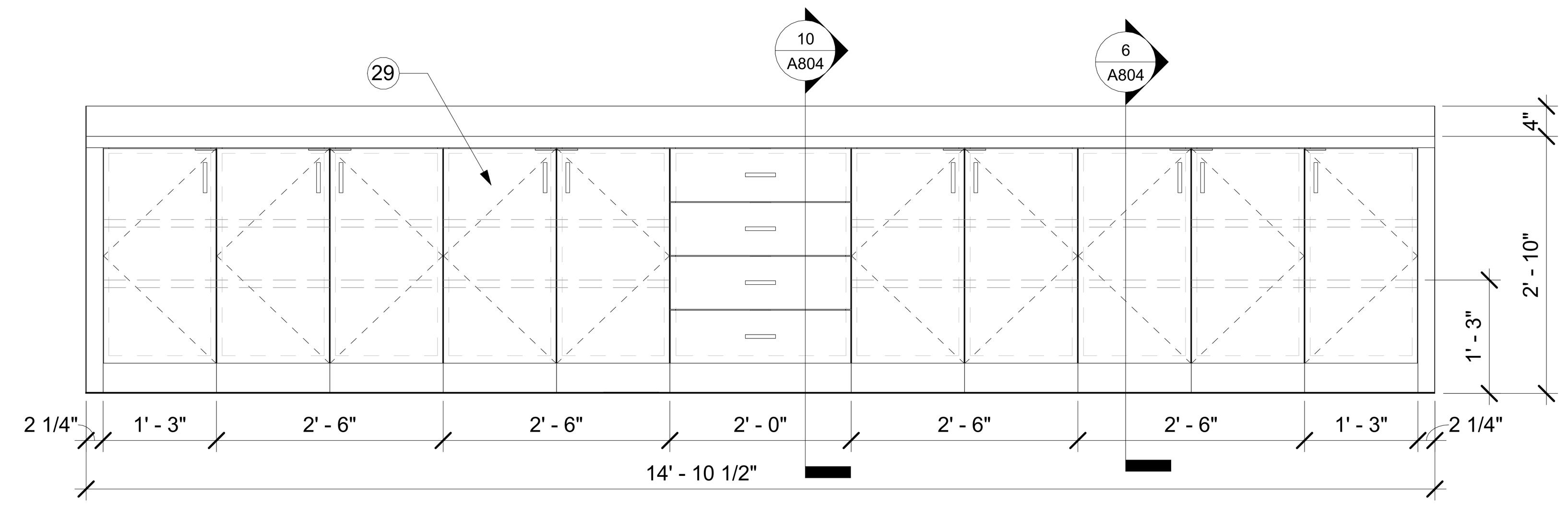

6
A803
ELEV: WORK ROOM SOUTH (230)
SCALE : 3/4" = 1'-0"

LOWER CABINET SHELVING:		
ACCESSIBLE	= 29 LF	= 63.7%
NON ACCESSIBLE	= 16.5 LF	= 36.3%
TOTAL	= 45.5 LF	= 100%

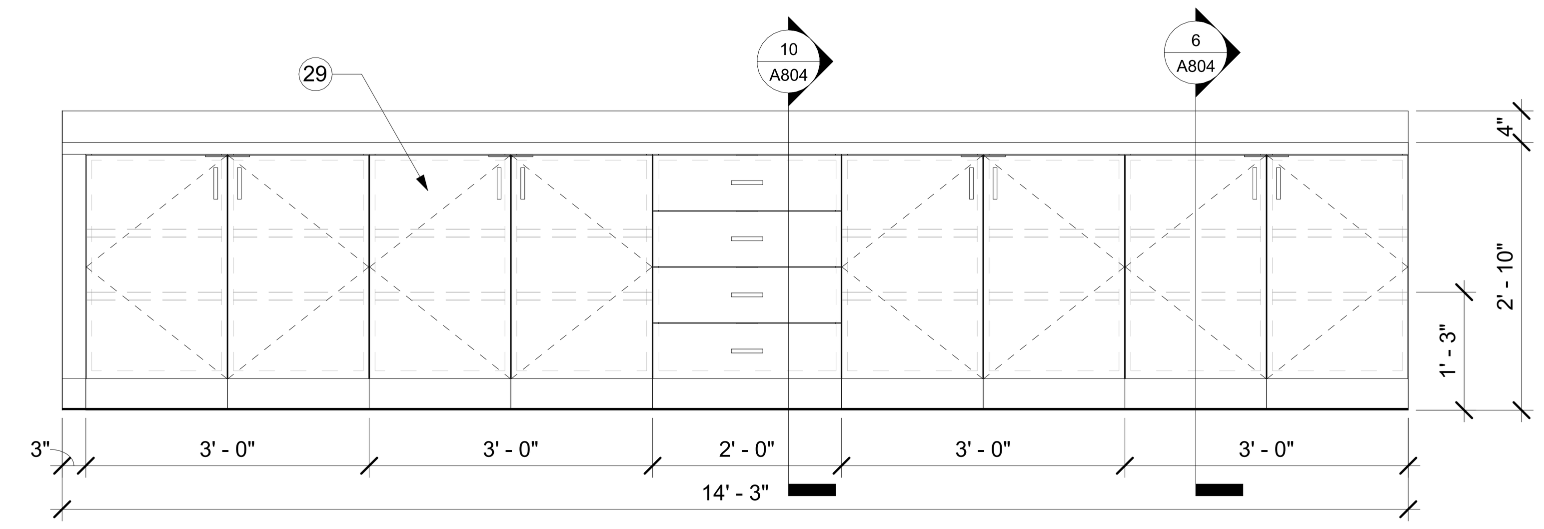

LOWER CABINET SHELVING:		
ACCESSIBLE	= 28 LF	= 63.7%
NON ACCESSIBLE	= 16 LF	= 36.3%
TOTAL	= 44 LF	= 100%

5
A803
ELEV: WORK ROOM SOUTH (110)
SCALE : 3/4" = 1'-0"

GENERAL NOTES: RESTROOMS & BREAK ROOMS

A. FINISH SCHEDULE & LEGEND REFER TO A900 & A901.

B. WALL PARTITION TYPES REFER TO A950.

C. RESTROOMS AT OFFICE BUILDING, PERIMETER WALLS (GYP & METAL STUD) TO GO TO UNDERSIDE OF DECK AND PROVIDE ACOUSTICAL BATT INSULATION.

D. COORDINATE INSTALLATION OF REQUIRED BLOCKING AND STABALIZING FOR FIXTURES.

E. THE STRUCTURAL STRENGTH OF GRAB BARS AT ACCESSIBLE WATER CLOSETS SHALL COMPLY WITH TEXAS ACCESSIBILTY STANDARDS 2012.

F. FURNSIH & INSTALL KITCHEN APPLIANCES AT BREAK ROOMS AS NOTED.

KEY NOTES: RESTROOMS & BREAK ROOMS 1

1 WALL MOUNTED TOILET ACCESSIBLE
2 WALL MOUNTED TOILET
3 WALL MOUNTED URINAL ACCESSIBLE
4 WALL MOUNTED URINAL
5 URINAL PARTITION T-10
6 PHENOLIC TOILET PARTITION T-10
7 CLOTHES HOOK T-05
8 36" GRAB BAR T-03
9 42" GRAB BAR T-04
10 TOILET PAPER DISPENSER T-01
11 SEAT COVER DISPENSER T-02
12 SANITARY NAPKIN DISPOSAL T-06
13 HI-LOW DRINKING FOUNTAIN WITH BOTTLE FILLER
14 PRIVACY GLASS
15 SEMI-RECESSED PAPER TOWEL DISPENSER T-07
16 SOAP DISPENSER T-08
17 MIRROR T-09
18 SOLID SURFACE COUNTERTOP
19 LAVATORY SINK UNDERMONT AT COUNTER
20 CANE APRON ACCESSORY
21 LINEAR SHOWER DRAIN
22 24" GRAB BAR
23 48" GRAB BAR
24 FOLDING SHOWER SEAT T-11
25 HANDHELD SHOWER SYSTEM
26 ALUMINUM CORNER GUARD FULL HEIGHT
27 ALUMINUM END CAP FULL HEIGHT
28 FURNITURE
29 BASE CABINET
30 UPPER CABINET
31 JANITOR'S SINK
32 REFRIGERATOR: FURNISH & INSTALL GE 21.9 CF TOP FREEZER REFRIGERATOR WHITE GTS22KGNRWW.
33 GYPSUM BOARD FURR-DOWN HEADER
34 OFFICE EQUIPMENT
35 GYM EQUIPMENT
36 STRUCTURAL BRACE FRAME RE: STRUCTURAL
37 PIPE PROTECTION
38 PROTECTIVE COVER UNDER LAVATORY
39 HAND SINK & VANITY UNIT, WALL MOUNTED BASIS OF DESIGN: SINK 43003L01 AVENTO & VANITY A87600 AVENTO BY VILLEROY & BOCH
40 DRINKING FOUNTAIN FILTERED WATER FILLER AT SINK
41 MICROWAVE: FURNISH & INSTALL GE 1.4 CF COUNTER TOP MICROWAVE OVEN WHITE JES1460DSWW.
42 DISHWASHER: FURNISH AND INSTALL GE GDT225SGLWW

FSGROUP®
ARCHITECTS
16575 Village Drive
Houston Texas 77040
713 344 1752 PH
fsdesignbuild.com

PROJECT NAME

THE STATE OF TEXAS
FORT BEND COUNTY

INFORMATION TECHNOLGY BUILDING
1419 EUGENE HEIMANN CIRCLE
FORT BEND COUNTY . RICHMOND . TEXAS 77469

CONSULTANTS

PROFESSIONAL SEAL

REGISTERED ARCHITECT
FAKHRUDDIN N. SABIR
22631
STATE OF TEXAS
5/15/2024

ISSUED FOR
ISSUED FOR PROPOSALS AND PERMIT

REVISIONS

No.	DESCRIPTION	DATE

KEY PLAN

TRUE
NORTH

SHEET TITLE
CASEWORK - WORK ROOM & COFFEE BAR

SCALE
As indicated

DATE
05/15/2024

PROJECT NUMBER
2319

SHEET NUMBER
A803

PLOT DATE: 5/22/2024 5:30:10 PM
FILE PATH: Autodesk Docs://FBC IT Building/FBIT_A23.rvt

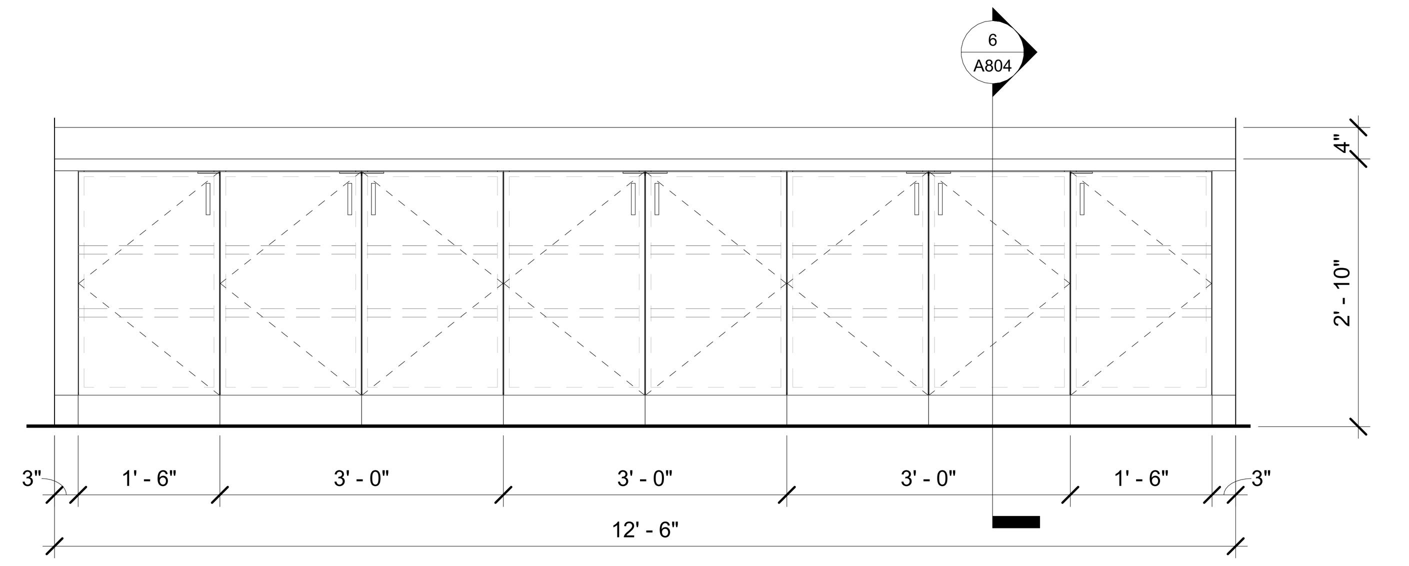

LOWER CABINET SHELVING:

ACCESSIBLE	=	24 LF	=	66.7%
NON-ACCESSIBLE	=	12 LF	=	33.3%
TOTAL	=	36 LF	=	100%

16 A804 ELEV: MILLWORK TRAINING ROOM SOUTH (102)
SCALE : 3/4" = 1'-0"

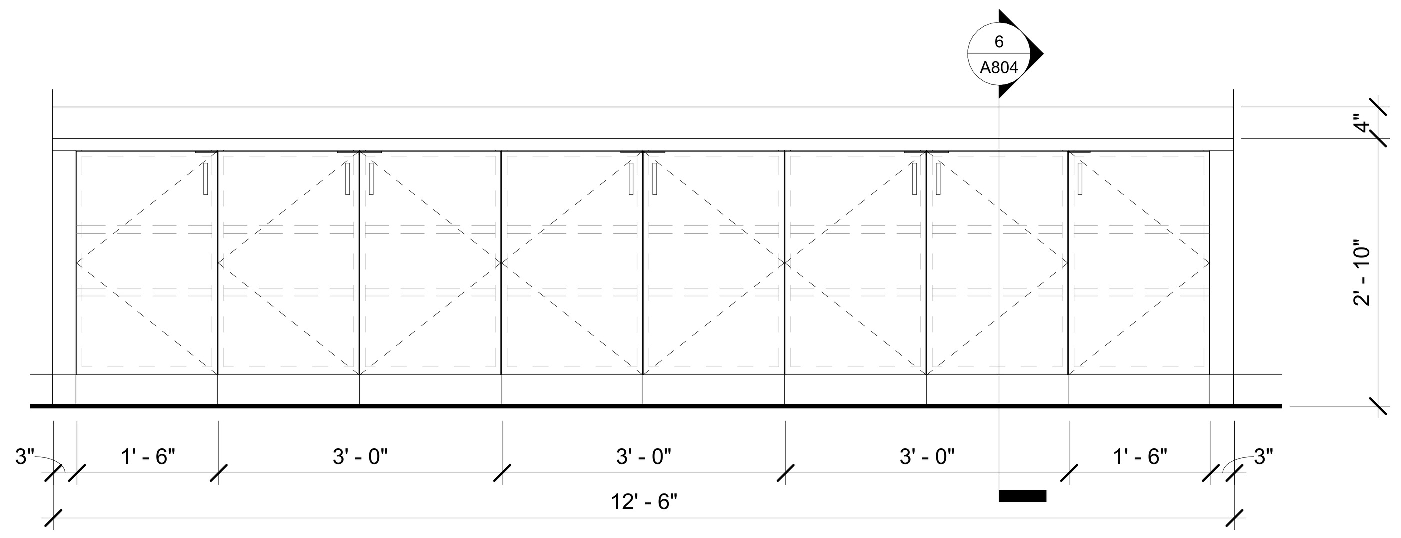

LOWER CABINET SHELVING:

ACCESSIBLE	=	24 LF	=	66.7%
NON-ACCESSIBLE	=	12 LF	=	33.3%
TOTAL	=	36 LF	=	100%

15 A804 ELEV: MILLWORK TRAINING ROOM SOUTH (102)
SCALE : 3/4" = 1'-0"

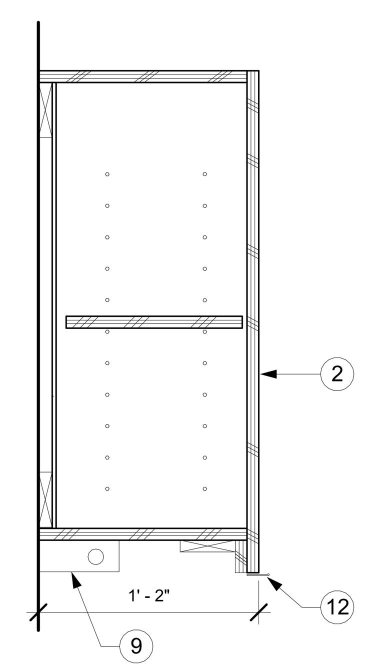

7 A804 SECTION: UPPER CABINET
SCALE : 1 1/2" = 1'-0"

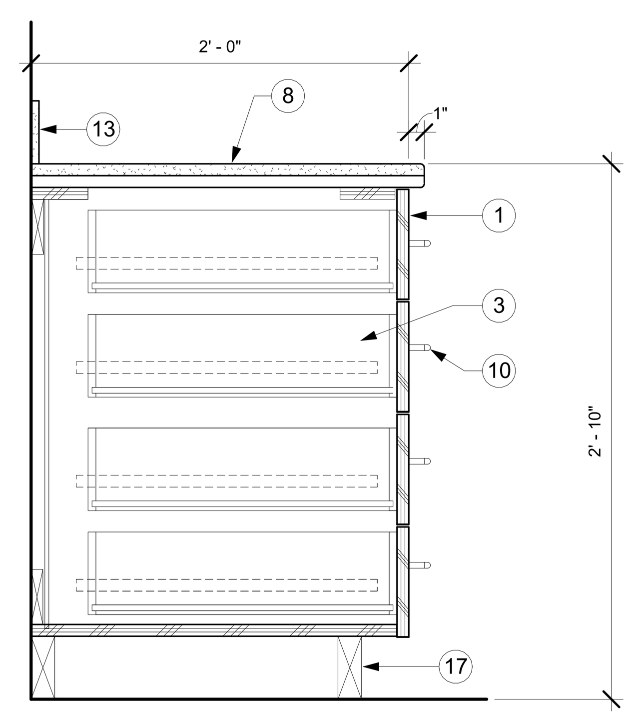

10 A804 SECTION: BASE CABINET w/ DRAWERS
SCALE : 1 1/2" = 1'-0"

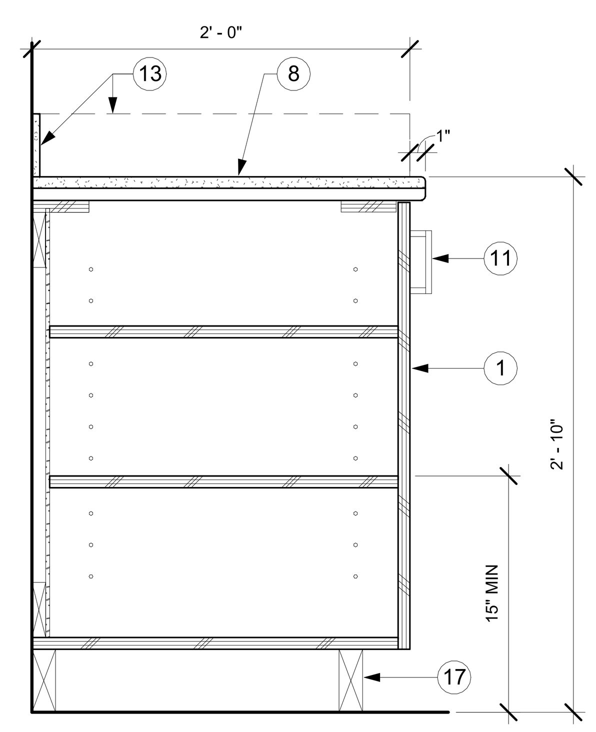

6 A804 SECTION: BASE CABINET
SCALE : 1 1/2" = 1'-0"

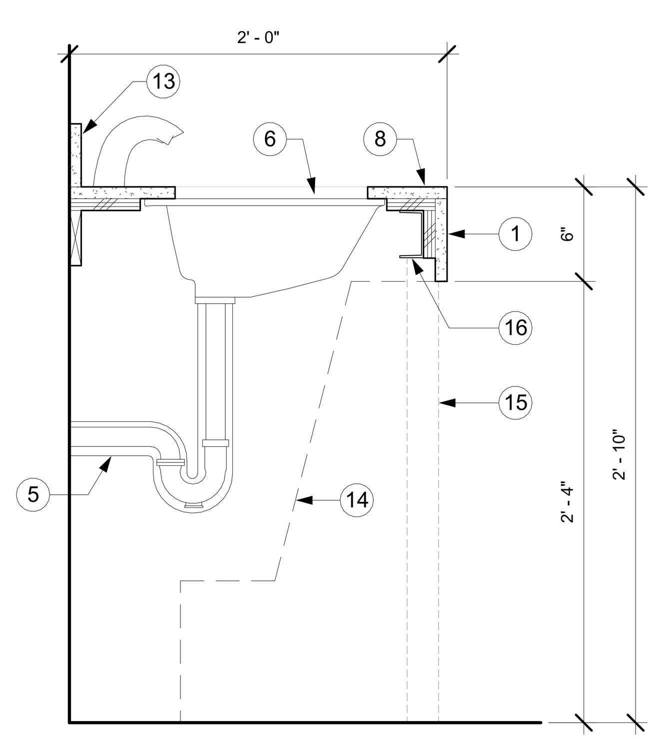

9 A804 SECTION: RESTROOM SINK
SCALE : 1 1/2" = 1'-0"

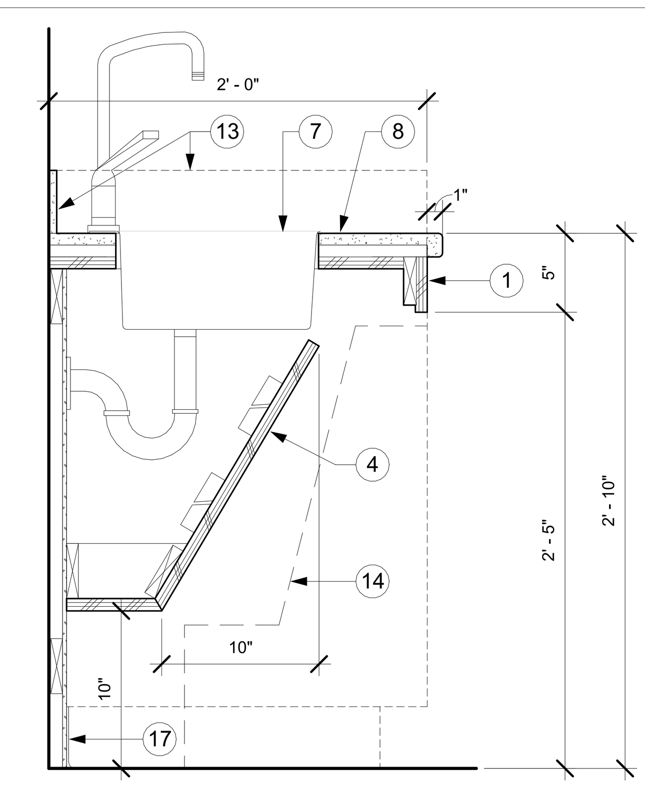

5 A804 SECTION: BASE CABINET @ SINK
SCALE : 1 1/2" = 1'-0"

GENERAL NOTES: CASEWORK

A. REFER TO INTERIOR ELEVATIONS ON TO IDENTIFY THE ROOM AND WALL ON WHICH THE CABINETRY IS LOCATED. COORDINATE CABINETRY LOCATIONS WITH FLOOR PLANS.

B. SPECIALIZED CABINET SECTIONS ONLY ARE KEYED OR NOTED ON CABINET ELEVATIONS. OTHER CABINET SECTIONS ILLUSTRATE TYPICAL CONSTRUCTION AND NOT EVERY DOOR AND /OR DRAWER VARIATION IS SHOWN.

C. PROVIDE FINISHED END PANELS AND /OR END RETUNS AT OPEN ENDED CABINETRY(INCLUDING KNEE SPACES).

D. PROVIDE PLASTIC LAMINATE CLAD TRIM AND FILLER PANELS WHERE EQUIPMENT IS LOCATED WITHIN CABINET UNITS.

E. GENERAL CONTRACTOR TO SUBMIT SHOP DRAWINGS FOR ALL CASEWORK FOR ARCHITECT TO REVIEW PRIOR TO FABRICATION.

F. PROVIDE BLOCKING WITHIN PARTITION FOR ALL CABINETRY ATTACHED TO WALLS. SEE SECTION DETAILS FOR ATTACHMENT DETAILS.

G. FILE DRAWERS ARE NOTED ON ELEVATIONS.

H. CABINET UNIT DEPTH IS AS SHOWN ON SECTION, U.N.O. ON ELEVATIONS.

I. PROVIDE BOTTOM CLOSURE FOR FILLER PANELS AT TOE SPACES AND AT BOTTOM OF UPPER WALL CABINETS TO CLOSE OFF ALL CONCEALED OPENINGS (I.E., KEEP VERMIN OUT).

J. AT THE BOTTOM OF INDIVIDUAL UPPER CABINET UNITS, ALLOW FOR CONTINUOUS RUNS OF UNDER CABINET LIGHTS; REFER TO ARCHITECTURAL AND ELECTRICAL DRAWINGS FOR LOCATIONS.

K. ALL WOOD TO BE FIRE TREATED.

L. ALL DOORS AT DRAWER FACES TO BE FLUSH WITH THE FACE OF FILLER PANELS AT SCRIBES. PROVIDE FILLER PANELS, WALL SCRIBES, FINISH FURR DOWNS AND ALL OTHER COMPONENTS FLUSH WITH FACES OF DOORS AND DRAWERS.

M. ALL CASEWORK DIMENSIONS ARE TO BE FIELD VERIFIED PRIOR TO FABRICATION.

N. ALL WOOD GRAIN LAMINATE TO BE INSTALLED WITH GRAIN RUNNING VERTICALLY, U.N.O. ON ELEVATIONS.

O. FINISHED END SUPPORT PANEL EDGES TO BE EDGE BANDED.

P. ALL BASE CABINET TOE KICK FACES TO BE FINISHED WITH SCHEDULED PLASTIC LAMINATE.

KEY NOTES: CASEWORK 1

1 BASE CABINET
2 WALL CABINET
3 CABINET DRAWER
4 REMOVABLE ACCESS PANEL
5 PIPE PROTECTION
6 LAVATORY SINK
7 KITCHEN SINK
8 SOLID SURFACE COUNTERTOP
9 UNDER CABINET STRIP LIGHT
10 WIRE PULL - HORIZONTAL POSITION; MOCKETT 4" ROUND TOP, DP128/4, BLACK
11 WIRE PULL - VERTICAL POSITION; MOCKETT 4" ROUND TOP, DP128/4, BLACK
12 TAB PULL; MOCKETT DP3 SERIES 1-1/2" PROFILE, DP3A, MATTE BLACK
13 BACKSPLASH / SIDESPLASH TO MATCH COUNTERTOP
14 ADA CLEARANCE
15 STEEL POST IN WALL BEYOND
16 STEEL CHANNEL COUNTERTOP SUPPORT
17 WALL BASE AT CABINET BASE

FSGROUP® ARCHITECTS
16575 Village Drive
Houston Texas 77040
713 344 1752 PH
fsdesignbuild.com

PROJECT NAME

THE STATE OF TEXAS FORT BEND COUNTY

INFORMATION TECHNOLGY BUILDING
1419 EUGENE HEIMANN CIRCLE
FORT BEND COUNTY , RICHMOND , TEXAS 77469

CONSULTANTS

PROFESSIONAL SEAL

REGISTERED ARCHITECT FAKHRUDDIN N. SABIR 22631 STATE OF TEXAS
5/15/2024

ISSUED FOR
ISSUED FOR PROPOSALS AND PERMIT

REVISIONS

No.	DESCRIPTION	DATE

KEY PLAN

TRUE NORTH

SHEET TITLE
CASEWORK DETAILS

SCALE As indicated
DATE 05/15/2024
PROJECT NUMBER 2319

SHEET NUMBER
A804

PLOT DATE: 5/22/2024 11:06:56 AM FILE PATH: Autodesk Docs://FBC IT Building/FBIT_A23.rvt

ROOM FINISH SCHEDULE - LEVEL 1

ROOM No.	ROOM NAME	FLOOR FINISH	WALL BASE FINISH	WALL FINISH	CEILING FINISH	AREA	COMMENTS
100	LOBBY	PT-2 TILE	WB-1 WOOD BASE	P-1 PAINT; P-4 PAINT	CL-1A OPEN TO STRUCTURE; CL-2 GYPSUM BOARD	1965 SF	
100 A	STAIR 1	TZ-1	WB-1 WOOD BASE	P-1 PAINT	CL-1A OPEN TO STRUCTURE	260 SF	
101	VESTIBULE	RECESSED GRILLE MAT	WB-1 WOOD BASE	P-1 PAINT	CL-2 GYPSUM BOARD	110 SF	
102	TRAINING ROOM	CPT-3 CARPET TILE	WB-1 WOOD BASE	P-1 PAINT; P-4 PAINT	CL-1B OPEN TO STRUCTURE; CL-5 SLAT CLNG	Not Placed	
105	WOMEN	PT-1 TILE	TB-1 TILE	P-1 PAINT; PT-3 TILE; TB-1 TILE	CL-2 GYPSUM BOARD	255 SF	C-1 COUNTERTOP
106	MEN	PT-1 TILE	TB-1 TILE	P-1 PAINT; PT-3 TILE; TB-1 TILE	CL-2 GYPSUM BOARD	215 SF	C-1 COUNTERTOP
107	MECHANICAL	FL-1 UNFINISHED CONCRETE	RB-1 RUBBER BASE	P-1 PAINT	CL-1A OPEN TO STRUCTURE	290 SF	
110	WORK RM	LVT-1 LUXURY VINYL TILE	RB-1 RUBBER BASE	P-1 PAINT	CL-3 ACOUSTICAL CEILING	195 SF	
111	INVENTORY	FL-1 UNFINISHED CONCRETE	RB-1 RUBBER BASE	P-1 PAINT	CL-3 ACOUSTICAL CEILING	260 SF	
112	LOADING	FL-1 UNFINISHED CONCRETE	RB-1 RUBBER BASE	P-1 PAINT	CL-1A OPEN TO STRUCTURE	425 SF	
113	LOUNGE	LVT-1 LUXURY VINYL TILE	RB-1 RUBBER BASE	P-1 PAINT	CL-1B OPEN TO STRUCTURE	155 SF	
120	BULLPEN	LVT-1 LUXURY VINYL TILE; CPT-1 CARPET TILE	RB-1 RUBBER BASE; RB-2 RUBBER BASE	P-1 PAINT	CL-1B OPEN TO STRUCTURE; G3 LINEAR PANELS	2980 SF	
121	DEPLOY	CPT-2 CARPET TILE	RB-2 RUBBER BASE	P-1 PAINT	CL-3 ACOUSTICAL CEILING	135 SF	
122	FA SV 2	CPT-2 CARPET TILE	RB-2 RUBBER BASE	P-1 PAINT	CL-3 ACOUSTICAL CEILING	135 SF	
123	FA SV 1	CPT-2 CARPET TILE	RB-2 RUBBER BASE	P-1 PAINT	CL-3 ACOUSTICAL CEILING	135 SF	
124	OP SV 3	CPT-2 CARPET TILE	RB-2 RUBBER BASE	P-1 PAINT	CL-3 ACOUSTICAL CEILING	135 SF	
125	OP SV 2	CPT-2 CARPET TILE	RB-2 RUBBER BASE	P-1 PAINT	CL-3 ACOUSTICAL CEILING	140 SF	
126	OP SV 1	CPT-2 CARPET TILE	RB-2 RUBBER BASE	P-1 PAINT	CL-3 ACOUSTICAL CEILING	135 SF	
129	CONFERENCE	CPT-2 CARPET TILE	RB-2 RUBBER BASE	P-1 PAINT	CL-3 ACOUSTICAL CEILING	395 SF	
130	GYM	LVT-1 LUXURY VINYL TILE	RB-1 RUBBER BASE	P-1 PAINT	CL-3 ACOUSTICAL CEILING	365 SF	
131	SHOWER	PT-1 TILE	TB-1 TILE	P-1 PAINT; PT-3 TILE	CL-2 GYPSUM BOARD	70 SF	
132	SHOWER	PT-1 TILE	TB-1 TILE	P-1 PAINT; PT-3 TILE	CL-2 GYPSUM BOARD	90 SF	
133	BUNK 1	CPT-2 CARPET TILE	RB-2 RUBBER BASE	P-1 PAINT	CL-3 ACOUSTICAL CEILING	55 SF	
135	BUNK 2	CPT-2 CARPET TILE	RB-2 RUBBER BASE	P-1 PAINT	CL-3 ACOUSTICAL CEILING	75 SF	
136	FIRE RISER	FL-1 UNFINISHED CONCRETE	RB-1 RUBBER BASE	P-1 PAINT	CL-1A OPEN TO STRUCTURE	85 SF	
140	TECH BUILD RM	LVT-1 LUXURY VINYL TILE	RB-1 RUBBER BASE	P-1 PAINT	CL-3 ACOUSTICAL CEILING	555 SF	
141	ELECTRICAL	FL-1 UNFINISHED CONCRETE	RB-1 RUBBER BASE	P-1 PAINT	CL-1A OPEN TO STRUCTURE	145 SF	
142	MDM INVENTORY	LVT-1 LUXURY VINYL TILE	RB-1 RUBBER BASE	P-1 PAINT	CL-3 ACOUSTICAL CEILING	100 SF	
143	ELECTRICAL	FL-1 UNFINISHED CONCRETE	RB-1 RUBBER BASE	P-1 PAINT	CL-1A OPEN TO STRUCTURE	255 SF	
145	BREAK RM	LVT-1 LUXURY VINYL TILE	RB-1 RUBBER BASE	P-1 PAINT; PT-4 TILE	CL-2 GYPSUM BOARD	185 SF	C-1 COUNTERTOP; PL-1 LAMINATE
146	QUIET RM	CPT-1 CARPET TILE	RB-1 RUBBER BASE; RB-2 RUBBER BASE	P-1 PAINT	CL-3 ACOUSTICAL CEILING	50 SF	
147	JANITOR	FL-2 SEALED CONCRETE	RB-1 RUBBER BASE	P-1 PAINT	CL-3 ACOUSTICAL CEILING	50 SF	
150	STAIR 2	FL-1 UNFINISHED CONCRETE	RB-1 RUBBER BASE	P-1 PAINT	CL-1A OPEN TO STRUCTURE	205 SF	
160	STAIR 3	FL-1 UNFINISHED CONCRETE	RB-1 RUBBER BASE	P-1 PAINT	CL-1A OPEN TO STRUCTURE	275 SF	

ROOM FINISH SCHEDULE - LEVEL 2

ROOM No.	ROOM NAME	FLOOR FINISH	WALL BASE FINISH	WALL FINISH	CEILING FINISH	AREA	COMMENTS
200	FOYER	PT-2 TILE	WB-1 WOOD BASE	P-1 PAINT	CL-1A OPEN TO STRUCTURE; CL-2 GYPSUM BOARD	745 SF	
200 A	STAIR 1	TZ-1	WB-1 WOOD BASE	P-1 PAINT	CL-1A OPEN TO STRUCTURE	275 SF	
202	BULLPEN	LVT-1 LUXURY VINYL TILE; CPT-1 CARPET TILE	RB-1 RUBBER BASE; RB-2 RUBBER BASE	P-1 PAINT	CL-1B OPEN TO STRUCTURE; G3 LINEAR PANELS	1965 SF	
205	WOMEN	PT-1 TILE	TB-1 TILE	P-1 PAINT; PT-3 TILE; TB-1 TILE	CL-2 GYPSUM BOARD	185 SF	C-1 COUNTERTOP
206	MEN	PT-1 TILE	TB-1 TILE	P-1 PAINT; PT-3 TILE; TB-1 TILE	CL-2 GYPSUM BOARD	215 SF	C-1 COUNTERTOP
207	MECHANICAL	FL-1 UNFINISHED CONCRETE	RB-1 RUBBER BASE	P-1 PAINT	CL-1A OPEN TO STRUCTURE	305 SF	
208	CYBER / NSOC	CPT-2 CARPET TILE	RB-2 RUBBER BASE	P-1 PAINT	CL-3 ACOUSTICAL CEILING	655 SF	
209	FORENSIC	CPT-2 CARPET TILE	RB-2 RUBBER BASE	P-1 PAINT	CL-3 ACOUSTICAL CEILING	230 SF	
210	CS SV1	CPT-2 CARPET TILE	RB-2 RUBBER BASE	P-1 PAINT	CL-3 ACOUSTICAL CEILING	180 SF	
211	CS M1	CPT-2 CARPET TILE	RB-2 RUBBER BASE	P-1 PAINT	CL-3 ACOUSTICAL CEILING	280 SF	
212	DIAGNOSTIC	CPT-2 CARPET TILE	RB-2 RUBBER BASE	P-1 PAINT	CL-3 ACOUSTICAL CEILING	510 SF	
220	BULLPEN	LVT-1 LUXURY VINYL TILE; CPT-1 CARPET TILE	RB-1 RUBBER BASE; RB-2 RUBBER BASE	P-1 PAINT	CL-1B OPEN TO STRUCTURE; G3 LINEAR PANELS	2870 SF	
221	CONFERENCE	CPT-2 CARPET TILE	RB-2 RUBBER BASE	P-1 PAINT	CL-3 ACOUSTICAL CEILING	455 SF	
222	SUPERVISOR	CPT-2 CARPET TILE	RB-2 RUBBER BASE	P-1 PAINT	CL-3 ACOUSTICAL CEILING	155 SF	
223	INF SV1	CPT-2 CARPET TILE	RB-2 RUBBER BASE	P-1 PAINT	CL-3 ACOUSTICAL CEILING	155 SF	
224	INF M1	CPT-2 CARPET TILE	RB-2 RUBBER BASE	P-1 PAINT	CL-3 ACOUSTICAL CEILING	195 SF	
225	OP SV4	CPT-2 CARPET TILE	RB-2 RUBBER BASE	P-1 PAINT	CL-3 ACOUSTICAL CEILING	155 SF	
226	OP M1	CPT-2 CARPET TILE	RB-2 RUBBER BASE	P-1 PAINT	CL-3 ACOUSTICAL CEILING	305 SF	
227	SUPERVISOR	CPT-2 CARPET TILE	RB-2 RUBBER BASE	P-1 PAINT	CL-3 ACOUSTICAL CEILING	220 SF	
228	MANAGER	CPT-2 CARPET TILE	RB-2 RUBBER BASE	P-1 PAINT	CL-3 ACOUSTICAL CEILING	155 SF	
229	MANAGER	CPT-2 CARPET TILE	RB-2 RUBBER BASE	P-1 PAINT	CL-3 ACOUSTICAL CEILING	150 SF	
230	WORK RM	LVT-1 LUXURY VINYL TILE	RB-1 RUBBER BASE	P-1 PAINT	CL-3 ACOUSTICAL CEILING	180 SF	
240	DATA CENTER	AFL ACCESS FLOOR	RB-1 RUBBER BASE	P-1 PAINT	CL-5 ACOUSTICAL CLEAN ROOM CEILING	1300 SF	
242	ELECTRICAL	FL-1 UNFINISHED CONCRETE	RB-1 RUBBER BASE	P-1 PAINT	CL-1A OPEN TO STRUCTURE	110 SF	
245	BREAK RM	LVT-1 LUXURY VINYL TILE	RB-1 RUBBER BASE	P-1 PAINT; PT-4 TILE	CL-2 GYPSUM BOARD	195 SF	C-1 COUNTERTOP; PL-1 LAMINATE
246	QUIET RM	CPT-1 CARPET TILE	RB-2 RUBBER BASE	P-1 PAINT	CL-3 ACOUSTICAL CEILING	50 SF	
247	JANITOR	FL-2 SEALED CONCRETE	RB-1 RUBBER BASE	P-1 PAINT	CL-3 ACOUSTICAL CEILING	50 SF	
250	STAIR 2	FL-1 UNFINISHED CONCRETE	RB-1 RUBBER BASE	P-1 PAINT	CL-1A OPEN TO STRUCTURE	205 SF	
260	STAIR 3	FL-1 UNFINISHED CONCRETE	RB-1 RUBBER BASE	P-1 PAINT	CL-1A OPEN TO STRUCTURE	275 SF	

ROOM FINISH SCHEDULE - LEVEL 3

ROOM No.	ROOM NAME	FLOOR FINISH	WALL BASE FINISH	WALL FINISH	CEILING FINISH	AREA	COMMENTS
300	FOYER	PT-2 TILE	WB-1 WOOD BASE	P-1 PAINT	CL-2 GYPSUM BOARD	535 SF	
300 A	STAIR 1	TZ-1	WB-1 WOOD BASE	P-1 PAINT	CL-2 GYPSUM BOARD	250 SF	
301	GIS WORKROOM	LVT-1 LUXURY VINYL TILE	RB-1 RUBBER BASE	P-1 PAINT	CL-3 ACOUSTICAL CEILING	655 SF	
302	CORRIDOR	LVT-1 LUXURY VINYL TILE	RB-1 RUBBER BASE	P-1 PAINT	CL-3 ACOUSTICAL CEILING	735 SF	
305	WOMEN	PT-1 TILE	TB-1 TILE	P-1 PAINT; PT-3 TILE; TB-1 TILE	CL-2 GYPSUM BOARD	185 SF	C-1 COUNTERTOP
306	MEN	PT-1 TILE	TB-1 TILE	P-1 PAINT; PT-3 TILE; TB-1 TILE	CL-2 GYPSUM BOARD	215 SF	C-1 COUNTERTOP
307	MECHANICAL	FL-1 UNFINISHED CONCRETE	RB-1 RUBBER BASE	P-1 PAINT	CL-1A OPEN TO STRUCTURE	315 SF	
308	ASST DIRECTOR	CPT-2 CARPET TILE	RB-2 RUBBER BASE	P-1 PAINT	CL-3 ACOUSTICAL CEILING	335 SF	
309	TESTING HUDDLE	CPT-2 CARPET TILE	RB-2 RUBBER BASE	P-1 PAINT	CL-3 ACOUSTICAL CEILING	320 SF	
310	CONFERENCE	CPT-2 CARPET TILE	RB-2 RUBBER BASE	P-1 PAINT	CL-3 ACOUSTICAL CEILING	475 SF	
311	DIRECTOR	CPT-2 CARPET TILE	RB-2 RUBBER BASE	P-1 PAINT	CL-3 ACOUSTICAL CEILING	440 SF	
312	ASST DIRECTOR	CPT-2 CARPET TILE	RB-2 RUBBER BASE	P-1 PAINT	CL-3 ACOUSTICAL CEILING	335 SF	
313	VIDEO	CPT-2 CARPET TILE	RB-2 RUBBER BASE	P-8 PAINT	CL-3 ACOUSTICAL CEILING	305 SF	
320	BULLPEN	LVT-1 LUXURY VINYL TILE; CPT-1 CARPET TILE	RB-1 RUBBER BASE; RB-2 RUBBER BASE	P-1 PAINT	CL-1B OPEN TO STRUCTURE; G3 LINEAR PANELS	4045 SF	
321	APSP SV	CPT-2 CARPET TILE	RB-2 RUBBER BASE	P-1 PAINT	CL-3 ACOUSTICAL CEILING	150 SF	
322	APSP SV	CPT-2 CARPET TILE	RB-2 RUBBER BASE	P-1 PAINT	CL-3 ACOUSTICAL CEILING	145 SF	
323	APSP SV	CPT-2 CARPET TILE	RB-2 RUBBER BASE	P-1 PAINT	CL-3 ACOUSTICAL CEILING	145 SF	
324	APSP SV	CPT-2 CARPET TILE	RB-2 RUBBER BASE	P-1 PAINT	CL-3 ACOUSTICAL CEILING	150 SF	
325	APSP SV	CPT-2 CARPET TILE	RB-2 RUBBER BASE	P-1 PAINT	CL-3 ACOUSTICAL CEILING	205 SF	
326	APSP SV	CPT-2 CARPET TILE	RB-2 RUBBER BASE	P-1 PAINT	CL-3 ACOUSTICAL CEILING	215 SF	
327	APSP M1	CPT-2 CARPET TILE	RB-2 RUBBER BASE	P-1 PAINT	CL-3 ACOUSTICAL CEILING	305 SF	
328	PMO SV	CPT-2 CARPET TILE	RB-2 RUBBER BASE	P-1 PAINT	CL-3 ACOUSTICAL CEILING	220 SF	
329	PMO TL2	CPT-2 CARPET TILE	RB-2 RUBBER BASE	P-1 PAINT	CL-3 ACOUSTICAL CEILING	155 SF	
330	PMO TL1	CPT-2 CARPET TILE	RB-2 RUBBER BASE	P-1 PAINT	CL-3 ACOUSTICAL CEILING	150 SF	
331	WORK RM	LVT-1 LUXURY VINYL TILE	RB-1 RUBBER BASE	P-1 PAINT	CL-3 ACOUSTICAL CEILING	180 SF	
334	ELECTRICAL	FL-1 UNFINISHED CONCRETE	RB-1 RUBBER BASE	P-1 PAINT	CL-1A OPEN TO STRUCTURE	115 SF	
345	BREAK RM	LVT-1 LUXURY VINYL TILE	RB-1 RUBBER BASE	P-1 PAINT; PT-4 TILE	CL-2 GYPSUM BOARD	195 SF	C-1 COUNTERTOP; PL-1 LAMINATE
346	QUIET RM	CPT-1 CARPET TILE	RB-2 RUBBER BASE	P-1 PAINT	CL-3 ACOUSTICAL CEILING	50 SF	
347	JANITOR	FL-2 SEALED CONCRETE	RB-1 RUBBER BASE	P-1 PAINT	CL-3 ACOUSTICAL CEILING	50 SF	
350	STAIR 2	FL-1 UNFINISHED CONCRETE	RB-1 RUBBER BASE	P-1 PAINT	CL-1A OPEN TO STRUCTURE	240 SF	
360	STAIR 3	FL-1 UNFINISHED CONCRETE	RB-1 RUBBER BASE	P-1 PAINT	CL-1A OPEN TO STRUCTURE	290 SF	
361	HUDDLE	CPT-1 CARPET TILE	RB-2 RUBBER BASE	P-1 PAINT	CL-3 ACOUSTICAL CEILING	105 SF	
362	HUDDLE	CPT-1 CARPET TILE	RB-2 RUBBER BASE	P-1 PAINT	CL-3 ACOUSTICAL CEILING	95 SF	
363	HUDDLE	CPT-1 CARPET TILE	RB-2 RUBBER BASE	P-1 PAINT	CL-3 ACOUSTICAL CEILING	95 SF	
364	OFFICE	CPT-2 CARPET TILE	RB-2 RUBBER BASE	P-1 PAINT	CL-3 ACOUSTICAL CEILING	160 SF	

GENERAL NOTES: FINISHES

A. ALL EXPOSED SCREW HEADS SHALL MATCH ADJACENT SURFACES UNLESS NOTED OTHERWISE. ALL GRILLES, REGISTERS, ACCESS DOORS, SPEAKERS, COVER PLATES, FIRE EQUIPMENT CABINETS AND ALL OTHER APPLIED DEVICES SHALL MATCH COLOR OF ADJACENT SURFACE UNLESS NOTED OTHERWISE.

B. FLOOR FINISH CHANGES SHALL HAVE THRESHOLDS OR REDUCERS STRIPS.

C. ALL FLOOR MATERIAL TO BE INSTALLED USING MANUFACTURERS' RECOMMENDED METHODS AND PRODUCTS.

D. FOR ALL PAINT REFER TO FINISH LEGEND.

E. ALL SURFACES SHOULD BE PROPERLY SEALED. REFER TO FINISH LEGEND FOR WALL PAINT LEVEL GRADE FINISH.

F. CONTRACTOR TO SUBMIT SAMPLES OF ALL FINISHES TO ARCHITECT FOR APPROVAL PRIOR TO ORDERING PRODUCT.

G. FLOORING CONTRACTOR IS RESPONSIBLE FOR INSPECTION OF SLAB CONDITION PRIOR TO INSTALLING FLOORING MATERIALS.

H. RUBBER BASE SHALL HAVE PRE-FORMED CORNERS (INSIDE AND OUTSIDE). ALL LENGTHS OF BASE SHALL BE A MINIMUM OF 12".

I. ALL RUBBER BASE TO BE COVE AT CARPET AND STRAIGHT AT LVT.

J. REFER TO ELEVATIONS AND ROOM FINISH SCHEDULE FOR ADDITIONAL FINISH INFORMATION INCLUDING ALL WALL FINISHES.

FSGROUP ARCHITECTS
16575 Village Drive
Houston Texas 77040
713 344 1752 PH
fsdesignbuild.com

PROJECT NAME

THE STATE OF TEXAS · FORT BEND COUNTY

INFORMATION TECHNOLGY BUILDING
1419 EUGENE HEIMANN CIRCLE
FORT BEND COUNTY . RICHMOND . TEXAS 77469

CONSULTANTS

PROFESSIONAL SEAL

REGISTERED ARCHITECT · FAKHRUDDIN N. SABIR · 22631 · STATE OF TEXAS

5/15/2024

ISSUED FOR

ISSUED FOR PROPOSALS AND PERMIT

REVISIONS

No.	DESCRIPTION	DATE

KEY PLAN

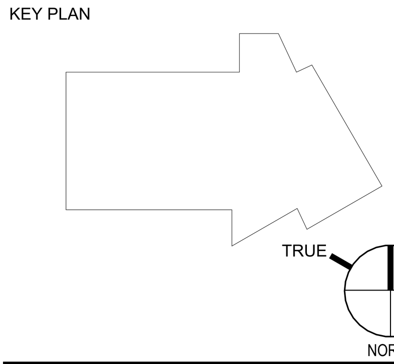

SHEET TITLE

ROOM FINISH SCHEDULE

SCALE 1 1/2" = 1'-0"

DATE 05/15/2024

PROJECT NUMBER 2319

SHEET NUMBER

A900

PLOT DATE: 5/22/2024 9:43:23 AM

FILE PATH: Autodesk Docs://FBC IT Building/FBIT_A23.rvt

FINISH LEGEND (REFER TO FINISH SCHEDULE, FINISH PLANS & CEILING PLANS FOR ADDITIONAL INFORMATION)

COUNTERTOP

C-1
- PRODUCT TYPE: COUNTERTOP | SOLID SURFACE
- COLOR NAME: SPARKLING GRANITA
- SLAB THICKNESS: 12 mm
- MANUFACTURER: CORIAN
- LOCATION: REFER TO DRAWINGS

PLASTIC LAMINATE

PL-1
- PRODUCT TYPE: PLASTIC LAMINATE
- COLOR NAME: NEW WHITE 7223 COLORCORE2 LAMINATE
- MANUFACTURER: FORMICA OR EQUAL
- LOCATION: REFER TO DRAWINGS

PL-2
- PRODUCT TYPE: WOOD FORMICA FOR DOORS
- COLOR NAME: MILLENNIUM OAK 5887
- MANUFACTURER: FORMICA OR EQUAL
- LOCATION: REFER TO DRAWINGS

CEILING TYPES

CL-1A
- PRODUCT TYPE: OPEN TO STRUCTURE
- FINISH: PAINT (P-1)
- LOCATION: REFER TO DRAWINGS

CL-1B
- PRODUCT TYPE: OPEN TO STRUCTURE
- FINISH: PAINT (P-4)
- LOCATION: REFER TO DRAWINGS

CL-2
- PRODUCT TYPE: GYPSUM BOARD (5/8" THICK)
- FINISH: PAINT (P-1)
- LOCATION: REFER TO DRAWINGS

CL-3
- PRODUCT TYPE: ACOUSTICAL CEILING TILE
- PANEL NAME: XXX
- PANEL SIZE: 24" x 24"
- SUSPENSION SYSTEM: XXX
- MANUFACTURER: XXX
- LOCATION: OFFICES, CONFERENCE RMS

CL-4
- PRODUCT TYPE: WOOD SLAT CEILING SYSTEM
- PANEL NAME: AALINE
- PANEL SIZE: XXX
- SUSPENSION SYSTEM: XXX
- COLOR: WHITE OAK
- MANUFACTURER: AALINE
- LOCATION: TRAINING ROOM

CL-5
- PRODUCT TYPE: ACOUSTICAL CEILING TILE
- PANEL NAME: CLEAN ROOM VL
- PANEL SIZE: 24" x 24"
- SUSPENSION SYSTEM: TBD
- MANUFACTURER: ARMSTRONG
- LOCATION: DATA CENTER

G3
- PRODUCT TYPE: NON-LIT ACOUSTIC PANEL
- PANEL NAME: ABVSN
- PANEL SIZE: 8'-0" LONG
- SUSPENSION SYSTEM: AIRCRAFT CABLE
- MOUNTING BRACKET FINISH: TITANIUM
- MANUFACTURER: ALIGHT
- LOCATION: BULLPENS

PAINT

P-1
- PRODUCT TYPE: PAINT
- COLOR NAME: ALABASTER
- COLOR NUMBER: SW 7008
- FINISH: EGGSHELL FINISH ON WALLS
- MANUFACTURER: SHERWIN WILLIAMS
- LOCATION: ALL WALLS U.N.O.

P-2
- PRODUCT TYPE: PAINT
- COLOR NAME: ALABASTER
- COLOR NUMBER: SW 7008
- FINISH: FLAT FINISH ON CEILINGS
- MANUFACTURER: SHERWIN WILLIAMS
- LOCATION: ALL CEILINGS U.N.O.

P-3
- PRODUCT TYPE: PAINT
- COLOR NAME: ALABASTER
- COLOR NUMBER: SW 7008
- FINISH: SEMI-GLOSS ON METALS
- MANUFACTURER: SHERWIN WILLIAMS
- LOCATION: REFER TO DRAWINGS

P-4
- PRODUCT TYPE: PAINT
- COLOR NAME: ESPALIER
- COLOR NUMBER: SW 6734
- FINISH: EGGSHELL
- MANUFACTURER: SHERWIN WILLIAMS
- LOCATION: REFER TO DRAWINGS

P-5A
- PRODUCT TYPE: PAINTED MURAL
- COLOR NAME: ESPALIER
- COLOR NUMBER: SW 6734
- FINISH: EGGSHELL
- MANUFACTURER: SHERWIN WILLIAMS
- LOCATION: TRAINING RM EAST WALL

P-5B
- PRODUCT TYPE: PAINTED MURAL
- COLOR NAME: ALABASTER
- COLOR NUMBER: SW 7008
- FINISH: EGGSHELL
- MANUFACTURER: SHERWIN WILLIAMS
- LOCATION: TRAINING RM SOUTH WALL

P-6
- PRODUCT TYPE: PAINT
- COLOR NAME: HONORABLE BLUE
- COLOR NUMBER: SW 6811
- FINISH: EGGSHELL
- MANUFACTURER: SHERWIN WILLIAMS
- LOCATION: REFER TO DRAWINGS

P-7
- PRODUCT TYPE: PAINT
- COLOR NAME: ESPALIER
- COLOR NUMBER: SW 6734
- FINISH: SEMI-GLOSS ON METALS
- MANUFACTURER: SHERWIN WILLIAMS
- LOCATION: EXTERIOR PAINT ON METAL

P-8
- PRODUCT TYPE: DIGITAL COMPOSITING PAINT
- COLOR NAME: DIGICOMP GREEN
- COLOR NUMBER: 5751
- FINISH: ULTRA-FLAT
- MANUFACTURER: ROSCO DIGICOMP HD
- LOCATION: VIDEO ROOM WALLS

FLOOR FINISH: CARPET

CPT-1
- PRODUCT TYPE: CARPET TILE
- PRODUCT SIZE: 24" x 24"
- COLOR NAME: VISIBLE TILE 5T002 EMIT COLOR 01530
- MANUFACTURER: SHAW CONTRACT GROUP
- LOCATION: BULLPEN
- PATTERN: ASHLAR

CPT-2
- PRODUCT TYPE: CARPET TILE
- PRODUCT SIZE: 24" x 24"
- COLOR NAME: ZEAL TILE 5T488 VIBRANCE COLOR 87327
- MANUFACTURER: SHAW CONTRACT GROUP
- LOCATION: OFFICES
- PATTERN: ASHLAR

CPT-3
- PRODUCT TYPE: CARPET TILE
- PRODUCT SIZE: 24" x 24"
- COLOR NAME: COLLECTIVE III TILE 5T440 TAN COLOR 38111
- MANUFACTURER: SHAW CONTRACT GROUP
- LOCATION: TRAINING RM 102
- PATTERN: ASHLAR

FLOOR FINISH: MISCELLANEOUS

FL-1
- PRODUCT TYPE: CONCRETE (UN-FINISHED) (REFER TO WRITTEN SPECIFICATIONS FOR COMPLETE INFORMATION)
- LOCATION: BACK-OF-HOUSE AREAS, STAIRS 2 & 3

FL-2
- PRODUCT TYPE: CONCRETE SEALED
- LOCATION: BACK-OF-HOUSE AREAS

AFL
- PRODUCT TYPE: ACCESS FLOOR (RAISED FLOOR)
- PRODUCT SIZE: 24" x 24"
- PRODUCT NAME: XXX
- FINISH NAME: XXX
- MANUFACTURER: TATE INC.
- LOCATION: DATA CENTER RM 240

TZ-1
- PRODUCT TYPE: TERRAZZO
- PRODUCT SIZE: XXX
- ORIENTATION: REFER TO DRAWINGS
- COLOR NAME: XXX
- MANUFACTURER: XXX
- LOCATION: STAIR 1 TREADS AND LANDINGS

FLOOR FINISH: LUXURY VINYL TILE

LVT-1
- PRODUCT TYPE: WOOD PLANK LUXURY VINYL TILE
- PRODUCT SIZE: XXX
- ORIENTATION: REFER TO DRAWINGS
- COLOR NAME: RESIDE 6 mil HEARTH 94140
- MANUFACTURER: SHAW CONTRACT GROUP
- LOCATION: REFER TO DRAWINGS

TILE FINISH:

PT-1
- PRODUCT TYPE: PORCELAIN TILE
- PRODUCT SIZE: 12" x 24"
- ORIENTATION: REFER TO DRAWINGS
- COLLECTION: TRAVERTINE VEINCUT
- COLOR NAME: TRAVERTINE VEINCUT SILVER
- PRODUCT NUMBER: SKU T06TRAVSI1224FH
- MANUFACTURER: EMSER TILE
- LOCATION: FLOOR AT RESTROOMS

PT-2
- PRODUCT TYPE: GLAZED AND THIN TILE PORCELAIN
- PRODUCT SIZE: 47" x 110"
- ORIENTATION: REFER TO DRAWINGS
- COLOR NAME: LASSA WHITE
- PRODUCT NUMBER: SKU V21LASSWH47110M
- MANUFACTURER: EMSER TILE
- LOCATION: FLOOR AT LOBBY 100

PT-3
- PRODUCT TYPE: GLAZED PORCELAIN TILE
- PRODUCT SIZE: 12" x 24"
- ORIENTATION: REFER TO DRAWINGS
- COLLECTION: CASSERO II
- COLOR NAME: WHITE
- PRODUCT NUMBER: SKU F23CASSWH1224
- MANUFACTURER: EMSER TILE
- LOCATION: WALLS AT RESTROOMS

PT-4
- PRODUCT TYPE: GLAZED PORCELAIN TILE
- PRODUCT SIZE: 7" x 16"
- ORIENTATION: REFER TO DRAWINGS
- COLLECTION: TUBAGE
- COLOR NAME: BRONZE
- PRODUCT NUMBER: SKU W21TUBABZ0716
- MANUFACTURER: EMSER TILE
- LOCATION: RESTROOMS | WALL ACCENT TILE BEHIND MIRROR

PT-5
- PRODUCT TYPE: GLAZED PORCELAIN AND RECYCLED GLASS MOSAIC
- PRODUCT SIZE: 12" X 12" HEXAGON MOSAIC
- ORIENTATION: REFER TO DRAWINGS
- COLLECTION: CONFETTI II
- COLOR NAME: BRONZE
- PRODUCT NUMBER: SKU F45DUNHBU1223
- MANUFACTURER: EMSER TILE
- LOCATION: FLOOR IN SHOWERS

FLOOR FINISH: RECESSED GRILLE MAT

MAT
- PRODUCT TYPE: 3/4" RECESSED GRILLE MAT - WITH CARPET SCRAPE HD CARPET INSERTS
- PRODUCT SIZE: REFER TO DRAWINGS
- ORIENTATION: REFER TO DRAWINGS
- COLOR NAME: TBD FROM STANDARD RANGE
- RAIL FINISH: MILL
- MANUFACTURER: AMERICAN FLOOR MATS
- LOCATION: VESTIBULE

WALL BASE

RB-1
- PRODUCT TYPE: RUBBER BASE
- PRODUCT SIZE: 4" H x LENGTH
- COLOR NAME: TO MATCH ADJACENT WALL
- MANUFACTURER: ROPPE
- NOTES: STRAIGHT BASE AT LVT

RB-2
- PRODUCT TYPE: RUBBER BASE
- PRODUCT SIZE: 4" H x LENGTH
- COLOR NAME: TO MATCH ADJACENT WALL
- MANUFACTURER: ROPPE
- NOTES: COVE BASE AT CARPET

WB-1
- PRODUCT TYPE: APPLIED WOOD BASE
- PRODUCT SIZE: 4" H x LENGTH
- COLOR NAME: TO MATCH ADJACENT WALL
- MANUFACTURER: XXX

TB-1
- PRODUCT TYPE: GLAZED PORCELAIN TILE
- PRODUCT SIZE: 3" H x LENGTH
- PRODUCT NUMBER: SKUF23CASSWH03125B
- COLOR NAME: CASSERO II - WHITE
- MANUFACTURER: EMSER TILE

WALL FINISH: WALL COVERINGS

WC-1
- PRODUCT TYPE: NON-WOVEN BACKED VINYL
- PRODUCT SIZE: 54" WIDTH
- ORIENTATION: REFER TO DRAWINGS
- COLOR NAME: GRANITE
- PRODUCT NUMBER: SKUDG1240
- MANUFACTURER: MDC INTERIOR SOLUTIONS
- LOCATION: REFER TO DRAWINGS

WC-2
- PRODUCT TYPE: NON-WOVEN BACKED VINYL
- PRODUCT SIZE: 50" WIDTH
- ORIENTATION: REFER TO DRAWINGS
- COLOR NAME: BURNISH - DARK GREY
- PRODUCT NUMBER: 6678-802
- MANUFACTURER: DESIGNTEX
- LOCATION: REFER TO DRAWINGS

WC-3
- PRODUCT TYPE: NON-WOVEN BACKED VINYL
- PRODUCT SIZE: 50" WIDTH
- ORIENTATION: REFER TO DRAWINGS
- COLOR NAME: BURNISH - ROSE
- PRODUCT NUMBER: 6678-301
- MANUFACTURER: DESIGNTEX
- LOCATION: REFER TO DRAWINGS

WC-4
- PRODUCT TYPE: NON-PHTHALATE VINYL
- PRODUCT SIZE: 52" WIDTH
- ORIENTATION: REFER TO DRAWINGS
- COLOR NAME: TOMATO
- PRODUCT NUMBER: 399600-004
- MANUFACTURER: MAHARAM
- LOCATION: REFER TO DRAWINGS

WALL PANELS:

WP-1
- PRODUCT TYPE: PVC
- PRODUCT SIZE: 19.63" H X 19.63" W
- ORIENTATION: REFER TO DRAWINGS
- COLOR NAME: SATIN HUNT CLUB GREEN
- PRODUCT NUMBER: SKU: FRUM9195
- MANUFACTURER: EKENA MILLWORK
- LOCATION: LOBBY RECEPTION BACKWALL

FABRICS:

FB-1
- PRODUCT TYPE: TEK-WALL 1002
- PRODUCT SIZE: 54" WIDTH
- ORIENTATION: REFER TO DRAWINGS
- COLOR NAME: HERITAGE
- PRODUCT NUMBER: 399594-013
- MANUFACTURER: MAHARAM
- LOCATION: TRAINING ROOM PANELFOLD

FB-2
- PRODUCT TYPE: NON-LIT SUSPENDED ACOUSTIC PANEL
- PRODUCT SIZE: 8'-0" LENGTH
- ORIENTATION: REFER TO DRAWINGS
- COLOR NAME: XXX
- PRODUCT NUMBER: XXX
- MANUFACTURER: LESCO
- LOCATION: BULLPENS

PLASTER:

PLAS-1
- PRODUCT TYPE: PLASTER
- COLOR NAME: SKIMCOAT
- MANUFACTURER: XXX
- LOCATION: STAIR 3 AND LOADING DOCK SOFFIT

COLUMN COVER:

CC-1
- PRODUCT TYPE: STAINLESS ROUND METAL COLUMN COVER
- PRODUCT SIZE: XXX
- ORIENTATION: REFER TO DRAWINGS
- COLOR NAME: XXX
- MANUFACTURER: XXX
- LOCATION: LOADING DOCK

METAL PANEL FINISH:

MP-1
- PRODUCT TYPE: ALUMINUM COMPOSITE PANELS
- PRODUCT SIZE: XXX
- ORIENTATION: REFER TO DRAWINGS
- COLOR NAME: DRIFTWOOD MICA
- MANUFACTURER: ALUCOBOND
- LOCATION: EXTERIOR WALLS FIELD

MP-2
- PRODUCT TYPE: ALUMINUM COMPOSITE PANELS
- PRODUCT SIZE: XXX
- ORIENTATION: REFER TO DRAWINGS
- COLOR NAME: PLATINUM MICA
- MANUFACTURER: ALUCOBOND
- LOCATION: EXTERIOR WALLS ACCENT

MP-3
- PRODUCT TYPE: ALUMINUM COMPOSITE PANELS
- PRODUCT SIZE: XXX
- ORIENTATION: REFER TO DRAWINGS
- COLOR NAME: ANODIC SATIN MICA
- MANUFACTURER: ALUCOBOND
- LOCATION: EXTERIOR WALLS ACCENT

MP-4
- PRODUCT TYPE: ALUMINUM COMPOSITE PANELS
- PRODUCT SIZE: XXX
- ORIENTATION: REFER TO DRAWINGS
- COLOR NAME: MOONSTONE METALLIC
- MANUFACTURER: ALUCOBOND
- LOCATION: EXTERIOR WALLS ACCENT

MP-5
- PRODUCT TYPE: ALUMINUM COMPOSITE PANELS
- PRODUCT SIZE: XXX
- ORIENTATION: REFER TO DRAWINGS
- COLOR NAME: RUSTIC WALNUT
- MANUFACTURER: ALUCOBOND
- LOCATION: EXTERIOR WALLS EYEBROW CANOPY

MP-6
- PRODUCT TYPE: ALUMINUM COMPOSITE PANELS
- PRODUCT SIZE: XXX
- ORIENTATION: REFER TO DRAWINGS
- COLOR NAME: DRIFTWOOD MICA
- MANUFACTURER: ALUCOBOND
- LOCATION: EXTERIOR COPING AND FLASHING

MP-2P
- PRODUCT TYPE: ALUMINUM COMPOSITE PANELS PERFORATED
- PRODUCT SIZE: XXX
- ORIENTATION: REFER TO DRAWINGS
- COLOR NAME: PLATINUM MICA
- MANUFACTURER: ALUCOBOND
- LOCATION: EXTERIOR STAIR 3 WALLS ACCENT

MP-3P
- PRODUCT TYPE: ALUMINUM COMPOSITE PANELS PERFORATED
- PRODUCT SIZE: XXX
- ORIENTATION: REFER TO DRAWINGS
- COLOR NAME: ANODIC SATIN MICA
- MANUFACTURER: ALUCOBOND
- LOCATION: EXTERIOR STAIR 3 WALLS ACCEN

MP-4P
- PRODUCT TYPE: ALUMINUM COMPOSITE PANELS PERFORATED
- PRODUCT SIZE: XXX
- ORIENTATION: REFER TO DRAWINGS
- COLOR NAME: MOONSTONE METALLIC
- MANUFACTURER: ALUCOBOND
- LOCATION: EXTERIOR STAIR 3 WALLS ACCENT

MP-7P
- PRODUCT TYPE: METAL PANELS PERFORATED
- PRODUCT SIZE: XXX
- ORIENTATION: REFER TO DRAWINGS
- COLOR NAME: BRUSHED BRONZE - BERRIDGE
- MANUFACTURER: XXX
- LOCATION: INTERIOR LOBBY FINS

MP-8P
- PRODUCT TYPE: CORRUGATED METAL PANELS PERFORATED
- PRODUCT SIZE: XXX
- ORIENTATION: REFER TO DRAWINGS
- COLOR NAME: PERFORATED ROOFING - PERFORATED WESTERN RIB GALVALUME 16 GA
- MANUFACTURER: XXX
- LOCATION: EXTERIOR FENCING

MP-9P
- PRODUCT TYPE: METAL PANELS PERFORATED
- PRODUCT SIZE: XXX
- ORIENTATION: REFER TO DRAWINGS
- COLOR NAME: BERRIDGE OR STAINLESS STEEL SIMILAR TO MP-8P
- MANUFACTURER: ALUCOBOND
- LOCATION: STAIRS 2 & 3 GUARDRAILS

METALS:

AL-1
- PRODUCT TYPE: BRUSHED ALUMINUM
- PRODUCT SIZE: REFER TO DRAWINGS
- COLOR NAME: WHITE POWDER COAT
- MANUFACTURER: XXX
- LOCATION: REFER TO DRAWINGS

AL-2
- PRODUCT TYPE: BRUSHED ALUMINUM
- PRODUCT SIZE: REFER TO DRAWINGS
- SHAPE: U SHAPED
- COLOR NAME: WHITE POWDER COAT
- MANUFACTURER: XXX
- LOCATION: REFER TO DRAWINGS

AL-3
- PRODUCT TYPE: BRUSHED ALUMINUM
- PRODUCT SIZE: REFER TO DRAWINGS
- SHAPE: END CAP (L-SHAPE)
- COLOR NAME: WHITE POWDER COAT
- MANUFACTURER: XXX
- LOCATION: REFER TO DRAWINGS

GLAZING: EXTERIOR

- GL1 = 1" VISION INSULATED COLOR # 1
- GL1T = 1" VISION INSULATED TEMPERED COLOR # 1
- GL2 = 1" SPANDREL INSULATED COLOR # 2
- GL10 = 1" VISION INSULATED COLOR # 3
- GL10T = 1" VISION INSULATED TEMPERED COLOR # 3
- GL11 = 1" VISION INSULATED COLOR # 4

GLAZING: INTERIOR

- GL3T = 1/4" VISION TEMPERED
- GL4R = 1/4" VISION FIRE-RATED
- GL5T = 1/4" FROSTED TEMPERED
- GL6T = 1/4" VISION TEMPERED FILM

GENERAL NOTES: FINISHES

A. ALL EXPOSED SCREW HEADS SHALL MATCH ADJACENT SURFACES UNLESS NOTED OTHERWISE. ALL GRILLES, REGISTERS, ACCESS DOORS, SPEAKERS, COVER PLATES, FIRE EQUIPMENT CABINETS AND ALL OTHER APPLIED DEVICES SHALL MATCH COLOR OF ADJACENT SURFACE UNLESS NOTED OTHERWISE.

B. FLOOR FINISH CHANGES SHALL HAVE THRESHOLDS OR REDUCERS STRIPS.

C. ALL FLOOR MATERIAL TO BE INSTALLED USING MANUFACTURERS' RECOMMENDED METHODS AND PRODUCTS.

D. FOR ALL PAINT REFER TO FINISH LEGEND.

E. ALL SURFACES SHOULD BE PROPERLY SEALED. REFER TO FINISH LEGEND FOR WALL PAINT LEVEL GRADE FINISH.

F. CONTRACTOR TO SUBMIT SAMPLES OF ALL FINISHES TO ARCHITECT FOR APPROVAL PRIOR TO ORDERING PRODUCT.

G. FLOORING CONTRACTOR IS RESPONSIBLE FOR INSPECTION OF SLAB CONDITION PRIOR TO INSTALLING FLOORING MATERIALS.

H. RUBBER BASE SHALL HAVE PRE-FORMED CORNERS (INSIDE AND OUTSIDE). ALL LENGTHS OF BASE SHALL BE A MINIMUM OF 12".

I. ALL RUBBER BASE TO BE COVE AT CARPET AND STRAIGHT AT LVT.

J. REFER TO ELEVATIONS AND ROOM FINISH SCHEDULE FOR ADDITIONAL FINISH INFORMATION INCLUDING ALL WALL FINISHES.

FSGROUP® ARCHITECTS
16575 Village Drive
Houston Texas 77040
713 344 1752 PH
fsdesignbuild.com

PROJECT NAME

THE STATE OF TEXAS · FORT BEND COUNTY

INFORMATION TECHNOLGY BUILDING
1419 EUGENE HEIMANN CIRCLE
FORT BEND COUNTY . RICHMOND . TEXAS 77469

CONSULTANTS

PROFESSIONAL SEAL

REGISTERED ARCHITECT · FAKHRUDDIN N. SABIR · 22631 · STATE OF TEXAS
5/15/2024

ISSUED FOR
ISSUED FOR PROPOSALS AND PERMIT

REVISIONS

No.	DESCRIPTION	DATE

KEY PLAN

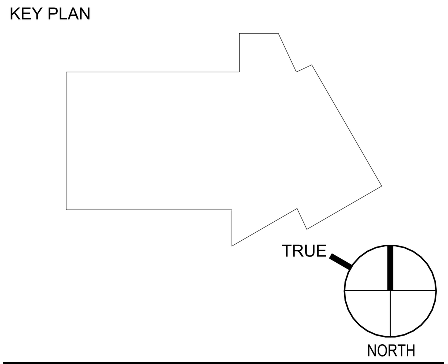

SHEET TITLE
ROOM FINISH LEGEND

SCALE: As indicated
DATE: 05/15/2024
PROJECT NUMBER: 2319
SHEET NUMBER: A901

FILE PATH: Autodesk Docs://FBC IT Building/FBIT_A23.rvt
PLOT DATE: 5/22/2024 9:43:36 AM

GENERAL NOTES: FINISHES

A. ALL EXPOSED SCREW HEADS SHALL MATCH ADJACENT SURFACES UNLESS NOTED OTHERWISE. ALL GRILLES, REGISTERS, ACCESS DOORS, SPEAKERS, COVER PLATES, FIRE EQUIPMENT CABINETS AND ALL OTHER APPLIED DEVICES SHALL MATCH COLOR OF ADJACENT SURFACE UNLESS NOTED OTHERWISE.

B. FLOOR FINISH CHANGES SHALL HAVE THRESHOLDS OR REDUCERS STRIPS.

C. ALL FLOOR MATERIAL TO BE INSTALLED USING MANUFACTURERS' RECOMMENDED METHODS AND PRODUCTS.

D. FOR ALL PAINT REFER TO FINISH LEGEND.

E. ALL SURFACES SHOULD BE PROPERLY SEALED. REFER TO FINISH LEGEND FOR WALL PAINT LEVEL GRADE FINISH.

F. CONTRACTOR TO SUBMIT SAMPLES OF ALL FINISHES TO ARCHITECT FOR APPROVAL PRIOR TO ORDERING PRODUCT.

G. FLOORING CONTRACTOR IS RESPONSIBLE FOR INSPECTION OF SLAB CONDITION PRIOR TO INSTALLING FLOORING MATERIALS.

H. RUBBER BASE SHALL HAVE PRE-FORMED CORNERS (INSIDE AND OUTSIDE). ALL LENGTHS OF BASE SHALL BE A MINIMUM OF 12".

I. ALL RUBBER BASE TO BE COVE AT CARPET AND STRAIGHT AT LVT.

J. REFER TO ELEVATIONS AND ROOM FINISH SCHEDULE FOR ADDITIONAL FINISH INFORMATION INCLUDING ALL WALL FINISHES.

LEGEND: FINISHES

CPT-1	CARPET TILE | 24" x 24"
CPT-2	CARPET TILE | 24" x 24"
CPT-3	CARPET TILE | 24" x 24"
LVT-1	WOOD PLANK LUXURY VINYL TILE
PT-1	PORCELAIN TILE | 12" x 24"
PT-2	PORCELAIN TILE | 47" x 110"
FL-1	CONCRETE (UN-FINISHED)
FL-2	SEALED CONCRETE
MAT	RECESSED GRILLE MAT

1 A910 FINISH PLAN LEVEL 1
SCALE : 1/8" = 1'-0"

FILE PATH: Autodesk Docs://FBC IT Building/FBIT_A23.rvt

PLOT DATE: 5/22/2024 9:43:47 AM

FSGROUP ARCHITECTS
16575 Village Drive
Houston Texas 77040
713 344 1752 PH
fsdesignbuild.com

PROJECT NAME

INFORMATION TECHNOLGY BUILDING
1419 EUGENE HEIMANN CIRCLE
FORT BEND COUNTY . RICHMOND . TEXAS 77469

CONSULTANTS

PROFESSIONAL SEAL

ISSUED FOR

ISSUED FOR PROPOSALS AND PERMIT

REVISIONS

No.	DESCRIPTION	DATE

KEY PLAN

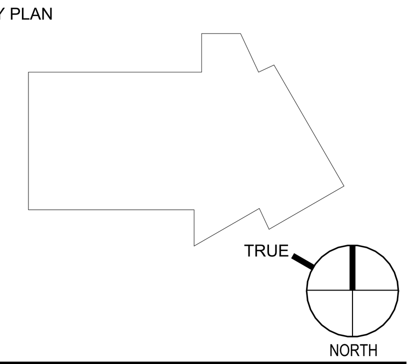

SHEET TITLE

FINISH PLAN LEVEL 1

SCALE: As indicated

DATE: 05/15/2024

PROJECT NUMBER: 2319

SHEET NUMBER

A910

1 A911 FINISH PLAN LEVEL 2
SCALE : 1/8" = 1'-0"

GENERAL NOTES: FINISHES

A. ALL EXPOSED SCREW HEADS SHALL MATCH ADJACENT SURFACES UNLESS NOTED OTHERWISE. ALL GRILLES, REGISTERS, ACCESS DOORS, SPEAKERS, COVER PLATES, FIRE EQUIPMENT CABINETS AND ALL OTHER APPLIED DEVICES SHALL MATCH COLOR OF ADJACENT SURFACE UNLESS NOTED OTHERWISE.

B. FLOOR FINISH CHANGES SHALL HAVE THRESHOLDS OR REDUCERS STRIPS.

C. ALL FLOOR MATERIAL TO BE INSTALLED USING MANUFACTURERS' RECOMMENDED METHODS AND PRODUCTS.

D. FOR ALL PAINT REFER TO FINISH LEGEND.

E. ALL SURFACES SHOULD BE PROPERLY SEALED. REFER TO FINISH LEGEND FOR WALL PAINT LEVEL GRADE FINISH.

F. CONTRACTOR TO SUBMIT SAMPLES OF ALL FINISHES TO ARCHITECT FOR APPROVAL PRIOR TO ORDERING PRODUCT.

G. FLOORING CONTRACTOR IS RESPONSIBLE FOR INSPECTION OF SLAB CONDITION PRIOR TO INSTALLING FLOORING MATERIALS.

H. RUBBER BASE SHALL HAVE PRE-FORMED CORNERS (INSIDE AND OUTSIDE). ALL LENGTHS OF BASE SHALL BE A MINIMUM OF 12".

I. ALL RUBBER BASE TO BE COVE AT CARPET AND STRAIGHT AT LVT.

J. REFER TO ELEVATIONS AND ROOM FINISH SCHEDULE FOR ADDITIONAL FINISH INFORMATION INCLUDING ALL WALL FINISHES.

LEGEND: FINISHES

CPT-1	CARPET TILE | 24" x 24"
CPT-2	CARPET TILE | 24" x 24"
CPT-3	CARPET TILE | 24" x 24"
LVT-1	WOOD PLANK LUXURY VINYL TILE
PT-1	PORCELAIN TILE | 12" x 24"
PT-2	PORCELAIN TILE | 47" x 110"
FL-1	CONCRETE (UN-FINISHED)
FL-2	SEALED CONCRETE
MAT	RECESSED GRILLE MAT

FSGROUP®
ARCHITECTS
16575 Village Drive
Houston Texas 77040
713 344 1752 PH
fsdesignbuild.com

PROJECT NAME

INFORMATION TECHNOLGY BUILDING
1419 EUGENE HEIMANN CIRCLE
FORT BEND COUNTY . RICHMOND . TEXAS 77469

CONSULTANTS

PROFESSIONAL SEAL

ISSUED FOR
ISSUED FOR PROPOSALS AND PERMIT

REVISIONS

No.	DESCRIPTION	DATE

KEY PLAN

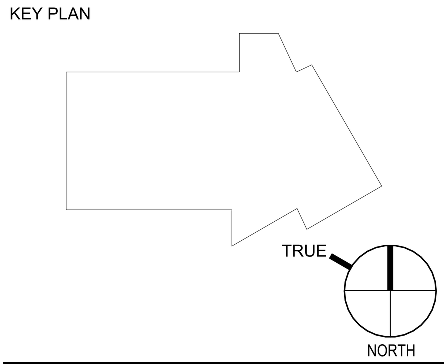

SHEET TITLE
FINISH PLAN LEVEL 2

SCALE
As indicated

DATE
05/15/2024

PROJECT NUMBER
2319

SHEET NUMBER
A911

FILE PATH: Autodesk Docs://FBC IT Building/FBIT_A23.rvt
PLOT DATE: 5/22/2024 9:43:59 AM

GENERAL NOTES: FINISHES

A. ALL EXPOSED SCREW HEADS SHALL MATCH ADJACENT SURFACES UNLESS NOTED OTHERWISE. ALL GRILLES, REGISTERS, ACCESS DOORS, SPEAKERS, COVER PLATES, FIRE EQUIPMENT CABINETS AND ALL OTHER APPLIED DEVICES SHALL MATCH COLOR OF ADJACENT SURFACE UNLESS NOTED OTHERWISE.

B. FLOOR FINISH CHANGES SHALL HAVE THRESHOLDS OR REDUCERS STRIPS.

C. ALL FLOOR MATERIAL TO BE INSTALLED USING MANUFACTURERS' RECOMMENDED METHODS AND PRODUCTS.

D. FOR ALL PAINT REFER TO FINISH LEGEND.

E. ALL SURFACES SHOULD BE PROPERLY SEALED. REFER TO FINISH LEGEND FOR WALL PAINT LEVEL GRADE FINISH.

F. CONTRACTOR TO SUBMIT SAMPLES OF ALL FINISHES TO ARCHITECT FOR APPROVAL PRIOR TO ORDERING PRODUCT.

G. FLOORING CONTRACTOR IS RESPONSIBLE FOR INSPECTION OF SLAB CONDITION PRIOR TO INSTALLING FLOORING MATERIALS.

H. RUBBER BASE SHALL HAVE PRE-FORMED CORNERS (INSIDE AND OUTSIDE). ALL LENGTHS OF BASE SHALL BE A MINIMUM OF 12".

I. ALL RUBBER BASE TO BE COVE AT CARPET AND STRAIGHT AT LVT.

J. REFER TO ELEVATIONS AND ROOM FINISH SCHEDULE FOR ADDITIONAL FINISH INFORMATION INCLUDING ALL WALL FINISHES.

LEGEND: FINISHES

CPT-1	CARPET TILE | 24" x 24"
CPT-2	CARPET TILE | 24" x 24"
CPT-3	CARPET TILE | 24" x 24"
LVT-1	WOOD PLANK LUXURY VINYL TILE
PT-1	PORCELAIN TILE | 12" x 24"
PT-2	PORCELAIN TILE | 47" x 110"
FL-1	CONCRETE (UN-FINISHED)
FL-2	SEALED CONCRETE
MAT	RECESSED GRILLE MAT

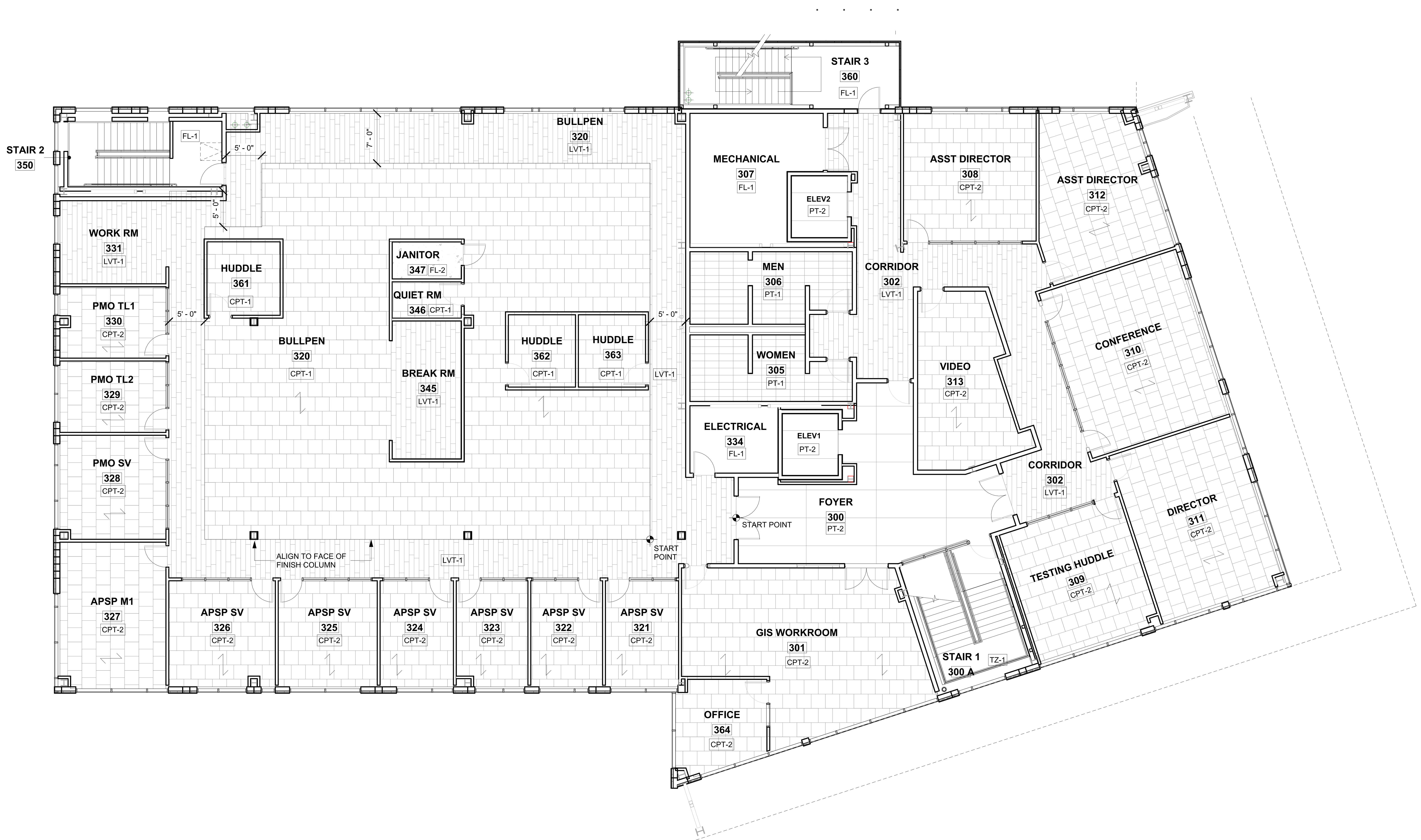

1 A912 FINISH PLAN LEVEL 3
SCALE : 1/8" = 1'-0"

FSGROUP®
ARCHITECTS
16575 Village Drive
Houston Texas 77040
713 344 1752 PH
fsdesignbuild.com

PROJECT NAME

THE STATE OF TEXAS · FORT BEND COUNTY

INFORMATION TECHNOLGY BUILDING
1419 EUGENE HEIMANN CIRCLE
FORT BEND COUNTY . RICHMOND . TEXAS 77469

CONSULTANTS

PROFESSIONAL SEAL

REGISTERED ARCHITECT FAKHRUDDIN 'N' SABIR 22631 STATE OF TEXAS
5/15/2024

ISSUED FOR
ISSUED FOR PROPOSALS AND PERMIT

REVISIONS

No.	DESCRIPTION	DATE

KEY PLAN

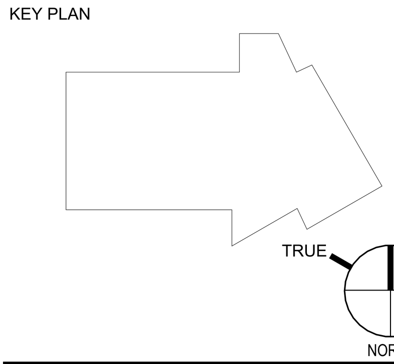

SHEET TITLE
FINISH PLAN LEVEL 3

SCALE As indicated
DATE 05/15/2024
PROJECT NUMBER 2319
SHEET NUMBER
A912

FILE PATH: Autodesk Docs://FBC IT Building/FBIT_A23.rvt
PLOT DATE: 5/22/2024 9:44:10 AM

GENERAL NOTES: FURNITURE PLANS

A. THIS FURNITURE PLAN IS FOR GENERAL REFERENCE ONLY.

B. THE PROCUREMENT AND INSTALLATION OF FURNITURE SHALL BE INCLUDED IN OWNER'S FURNITURE, FIXTURES AND EQUIPMENT PACKAGE (F.F.E.), WHICH IS N.I.C. THIS PROJECT.

C. ALL COORDINATING ITEMS FOR F.F.E. IDENTIFIED ELSEWHERE IN THE DOCUMENTS ARE INCLUDED IN THIS PROJECT (EXAMPLE - ROUGH IN ELECTRICAL FOR FURNITURE AND TVS.).

OWNER'S F.F.E. PACKAGE INCLUDES:

1 FURNITURE,
2 CHAIRS AND TABLES.
3 TRASH CONTAINERS.
4 GYMNASIUM EQUIPMENT.
5 BEDS AND BEDDING.
6 OFFICE EQUIPMENT, TELEPHONES, AND COMPUTERS.

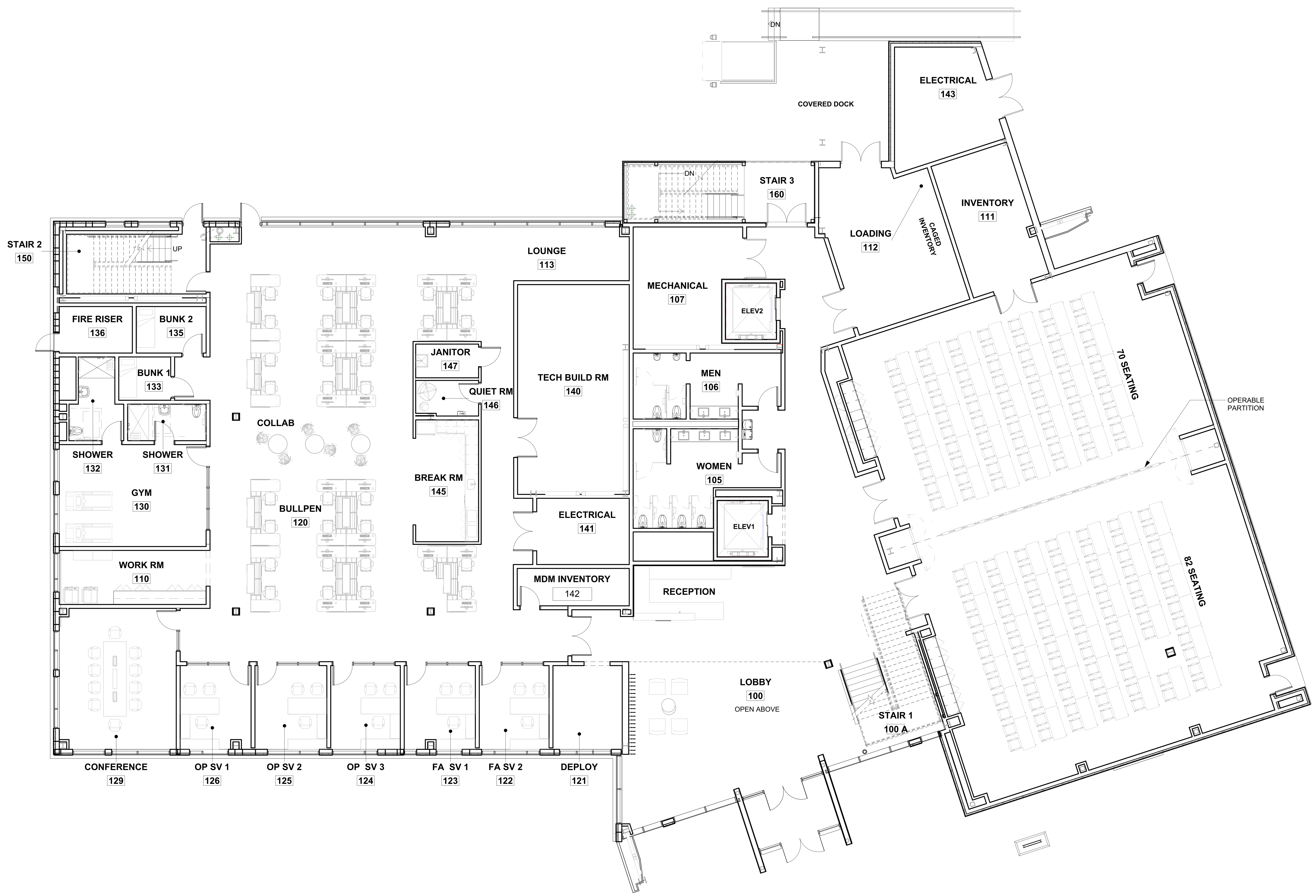

1
A920
FURNITURE PLAN: LEVEL 1
SCALE : 1/8" = 1'-0"

FSGROUP®
ARCHITECTS
16575 Village Drive
Houston Texas 77040
713 344 1752 PH
fsdesignbuild.com

PROJECT NAME

INFORMATION TECHNOLGY BUILDING
1419 EUGENE HEIMANN CIRCLE
FORT BEND COUNTY . RICHMOND . TEXAS 77469

CONSULTANTS

PROFESSIONAL SEAL

REGISTERED ARCHITECT FAKHRUDDIN N. SABIR 22631 STATE OF TEXAS
5/15/2024

ISSUED FOR
ISSUED FOR PROPOSALS AND PERMIT

REVISIONS

No.	DESCRIPTION	DATE

KEY PLAN

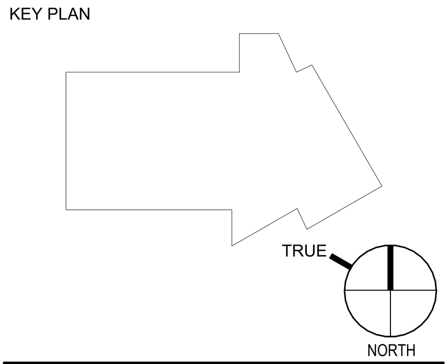

SHEET TITLE
FURNITURE PLAN LEVEL 1

SCALE: As indicated
DATE: 05/15/2024
PROJECT NUMBER: 2319
SHEET NUMBER
A920

PLOT DATE: 5/21/2024 5:32:09 PM
FILE PATH: Autodesk Docs://FBC IT Building/FBIT_A23.rvt

GENERAL NOTES: FURNITURE PLANS

A. THIS FURNITURE PLAN IS FOR GENERAL REFERENCE ONLY.

B. THE PROCUREMENT AND INSTALLATION OF FURNITURE SHALL BE INCLUDED IN OWNER'S FURNITURE, FIXTURES AND EQUIPMENT PACKAGE (F.F.E.), WHICH IS N.I.C. THIS PROJECT.

C. ALL COORDINATING ITEMS FOR F.F.E. IDENTIFIED ELSEWHERE IN THE DOCUMENTS ARE INCLUDED IN THIS PROJECT (EXAMPLE - ROUGH IN ELECTRICAL FOR FURNITURE AND TVS.).

OWNER'S F.F.E. PACKAGE INCLUDES:

1 FURNITURE.
2 CHAIRS AND TABLES.
3 TRASH CONTAINERS.
4 GYMNASIUM EQUIPMENT.
5 BEDS AND BEDDING.
6 OFFICE EQUIPMENT, TELEPHONES, AND COMPUTERS.

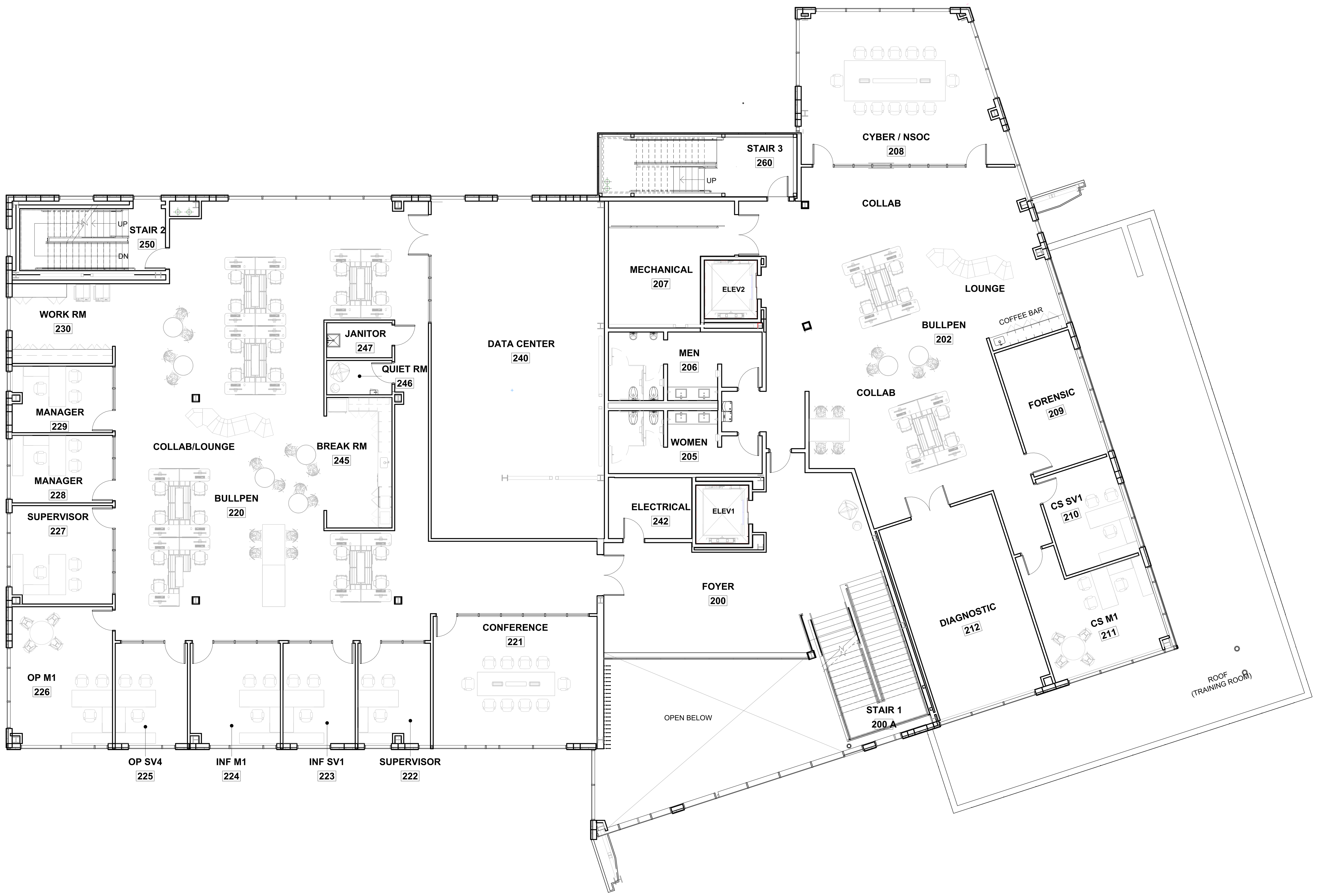

1
A921
FURNITURE PLAN: LEVEL 2
SCALE : 1/8" = 1'-0"

FSGROUP® ARCHITECTS
16575 Village Drive
Houston Texas 77040
713 344 1752 PH
fsdesignbuild.com

PROJECT NAME

THE STATE OF TEXAS · FORT BEND COUNTY

INFORMATION TECHNOLGY BUILDING
1419 EUGENE HEIMANN CIRCLE
FORT BEND COUNTY . RICHMOND . TEXAS 77469

CONSULTANTS

PROFESSIONAL SEAL

REGISTERED ARCHITECT · FAKHRUDDIN N. SABIR · 22631 · STATE OF TEXAS
5/15/2024

ISSUED FOR
ISSUED FOR PROPOSALS AND PERMIT

REVISIONS

No.	DESCRIPTION	DATE

KEY PLAN

TRUE NORTH

SHEET TITLE
FURNITURE PLAN LEVEL 2

SCALE: As indicated
DATE: 05/15/2024
PROJECT NUMBER: 2319
SHEET NUMBER
A921

FILE PATH: Autodesk Docs://FBC IT Building/FBIT_A23.rvt
PLOT DATE: 5/21/2024 5:32:27 PM

GENERAL NOTES: FURNITURE PLANS

A. THIS FURNITURE PLAN IS FOR GENERAL REFERENCE ONLY.

B. THE PROCUREMENT AND INSTALLATION OF FURNITURE SHALL BE INCLUDED IN OWNER'S FURNITURE, FIXTURES AND EQUIPMENT PACKAGE (F.F.E.), WHICH IS N.I.C. THIS PROJECT.

C. ALL COORDINATING ITEMS FOR F.F.E. IDENTIFIED ELSEWHERE IN THE DOCUMENTS ARE INCLUDED IN THIS PROJECT (EXAMPLE - ROUGH IN ELECTRICAL FOR FURNITURE AND TVS.).

OWNER'S F.F.E. PACKAGE INCLUDES:

1. FURNITURE.
2. CHAIRS AND TABLES.
3. TRASH CONTAINERS.
4. GYMNASIUM EQUIPMENT.
5. BEDS AND BEDDING.
6. OFFICE EQUIPMENT, TELEPHONES, AND COMPUTERS.

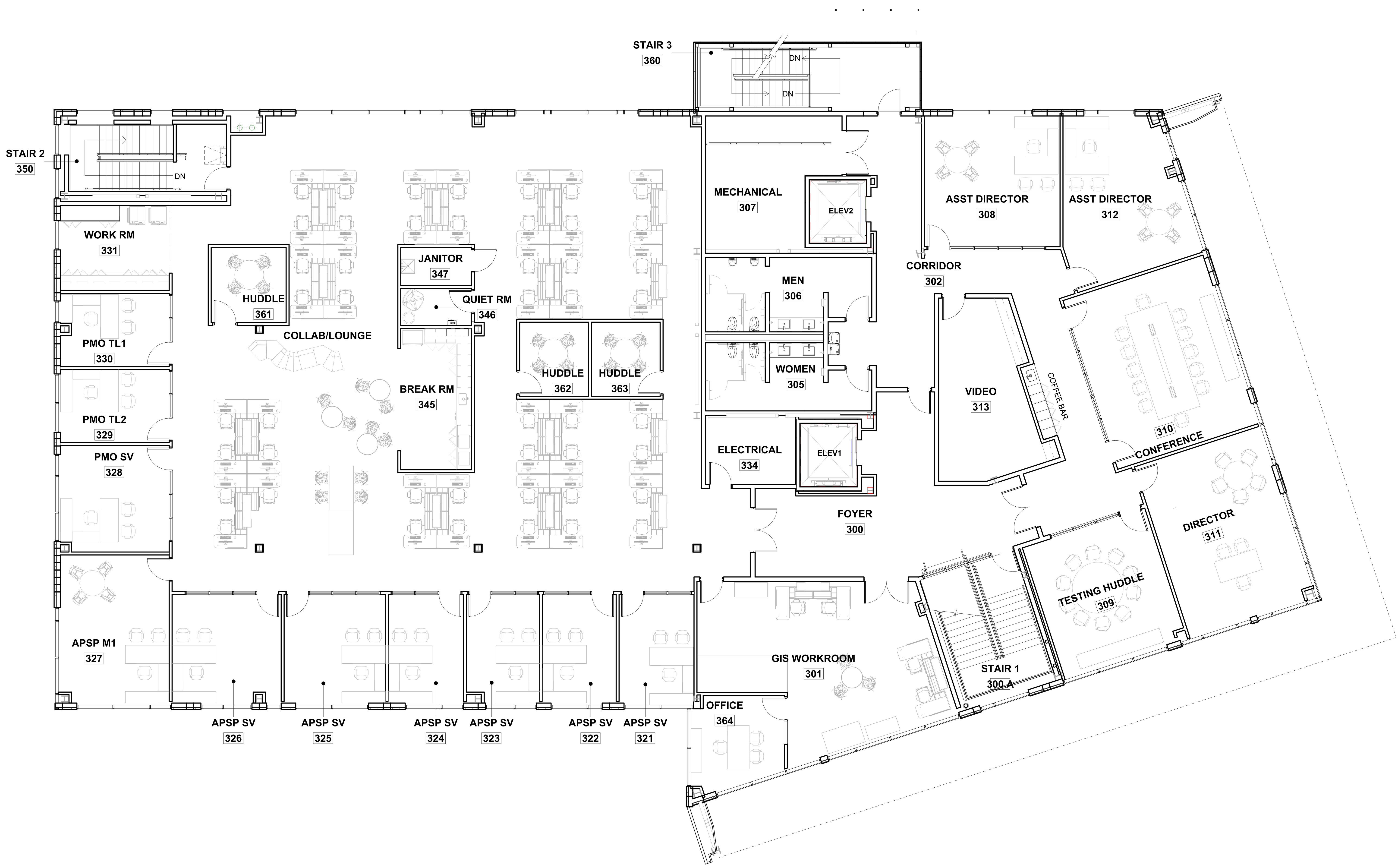

1 A922 FURNITURE PLAN: LEVEL 3
SCALE : 1/8" = 1'-0"

FSGROUP® ARCHITECTS
16575 Village Drive
Houston Texas 77040
713 344 1752 PH
fsdesignbuild.com

PROJECT NAME

THE STATE OF TEXAS FORT BEND COUNTY

INFORMATION TECHNOLGY BUILDING
1419 EUGENE HEIMANN CIRCLE
FORT BEND COUNTY . RICHMOND . TEXAS 77469

CONSULTANTS

PROFESSIONAL SEAL

REGISTERED ARCHITECT FAKHRUDDIN N. SABIR 22631 STATE OF TEXAS
5/15/2024

ISSUED FOR
ISSUED FOR PROPOSALS AND PERMIT

REVISIONS

No.	DESCRIPTION	DATE

KEY PLAN

TRUE NORTH

SHEET TITLE
FURNITURE PLAN LEVEL 3

SCALE: As indicated
DATE: 05/15/2024
PROJECT NUMBER: 2319
SHEET NUMBER: A922

FILE PATH: Autodesk Docs://FBC IT Building/FBIT_A23.rvt
PLOT DATE: 5/21/2024 5:32:44 PM

GENERAL NOTES: PARTITIONS

01 FIRE RESISTANT GYPSUM BOARD:
- FIRE RATED PARTITION CONSTRUCTION MUST CONFORM TO GYPSUM ASSOCIATION (GA) DESIGNS, UNDERWRITERS LABORATORY (UL) TESTED DESIGNS OR OTHER TESTS APPROVED BY GOVERNING CODE AUTHORITIES. FIRE ASSEMBLY DESIGN NUMBERS (I.E., GA WP 1200, UL U465) NOTED ON PARTITION DETAILS SHALL BE FOLLOWED WHEN A FIRE RATED ASSEMBLY IS INDICATED.
- WHEN FIRE RATED PARTITIONS INTERSECT NON-RATED PARTITIONS, CARRY FIRE RATED ASSEMBLY THROUGH NON-RATED CONSTRUCTION.
- CUTOUTS FOR ELECTRICAL DEVICES ON OPPOSITE SIDES OF PARTITIONS IN SAME STUD SPACE IS NOT ALLOWED.
- PROVIDE UL SYSTEM PENETRATION AT PENETRATIONS AND TERMINATIONS IN ACCORDANCE WITH DIVISION 7.
- PROVIDE FIRE STOPPING AND FIRE SAFING AT TOP OF PARTITION TERMINATIONS TO COMPLY WITH FIRE RATING ASSEMBLY AND EXTEND RATING TO STRUCTURAL DECK ABOVE.

02 INSTALL BACKING PLATES AT ALL WALL MOUNTED RAILINGS, TOILET AND SERVICE ACCESSORIES, WALL MOUNTED CASEWORK OR MILLWORK, SYSTEM FURNITURE LOCATIONS AND WALL MOUNTED DOOR BUMPERS. ALSO, PROVIDE BACKING PLATES BEHIND GYPSUM BOARD AT ALL LOCATIONS WHERE HORIZONTAL WOOD TRIM IS TO BE APPLIED.

03 ALL CORRIDOR PARTITIONS TO BE CONSTRUCTED TO RESIST THE PASSAGE OF SMOKE OR TO MEET THE REQUIRED RATING.

04 PROVIDE DEFLECTION OF STRUCTURE AT TERMINATIONS OF PARTITION WITH STRUCTURE ABOVE IN ACCORDANCE TO DIVISIONS 4 AND 9.

05 PROVIDE MOISTURE RESISTANT GYPSUM BOARD ON ALL WALLS IN ALL TOILETS, HOUSEKEEPING ROOMS, SOILED UTILITY ROOMS AND ALL PARTITIONS SCHEDULED TO RECEIVE CERAMIC TILE IN "NON WET" AREAS. REFER TO FINISH SCHEDULES AND FLOOR PLANS FOR LOCATION OF THESE WALLS. IN ADDITION, MOISTURE RESISTANT BOARD WILL BE USED BEHIND AND WITHIN 24" ON EITHER SIDE ADJACENT TO ALL PLUMBING FIXTURES AND DRINKING FOUNTAINS.

06 AT CHASE WALLS, THE SIDE WITH PLUMBING FIXTURES, PROVIDE LARGER (GUAGE AND SPACING) AS REQUIRED TO SUPPORT FIXTURES.

07 UNDERWRITERS LABORATORY AND OTHER TESTING AGENCY DESIGNATIONS INDICATED FOR FIRE RESISTIVE CONSTRUCTION ARE GIVEN FOR PURPOSES OF DESCRIBING CONSTRUCTION REQUIREMENTS ONLY AND NOT INTENDED TO LIMIT MANUFACTURERS OF MATERIALS. COMPLY WITH THE CONSTRUCTION REQUIREMENTS OF THE INDICATED DESIGN.

08 S.T.C. RATING SHOWN FOR SOUND WALLS ARE BASED ON LABORATORY TESTED ASSEMBLIES AND DO NOT NECESSARILY INDICATE THE ACTUAL S.T.C. RATING OF THE COMPLETED WORK.

09 LIMITING HEIGHTS INDICATED GIVE THE MAXIMUM UNSUPPORTED HEIGHT FOR THAT PARTITION TYPE BASED ON A DEFLECTION CRITERIA RATIO OF L / 240. WHERE FLOOR TO STRUCTURE HEIGHT OF PARTITION EXCEEDS THE INDICATED LIMITING HEIGHT, PROVIDE SUPPLEMENTAL BRACING TO THE STRUCTURE OVERHEAD AS REQUIRED TO MAINTAIN DEFLECTION RATIO WITHIN L / 240.

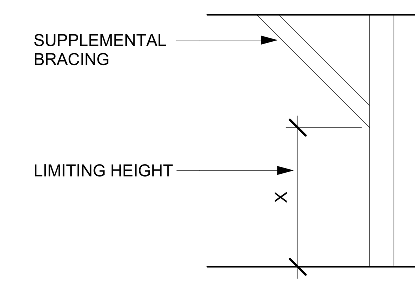

FOR PARTITIONS WITH "BRITTLE" FINISHES, SUCH AS PLASTER AND CERAMIC TILE, DESIGN PARTITION SYSTEM TO MAINTAIN DEFLECTION RATION WITHIN L / 360.

SUSPENDED CEILINGS SHALL NOT BE CONSIDERED AS BRACING.

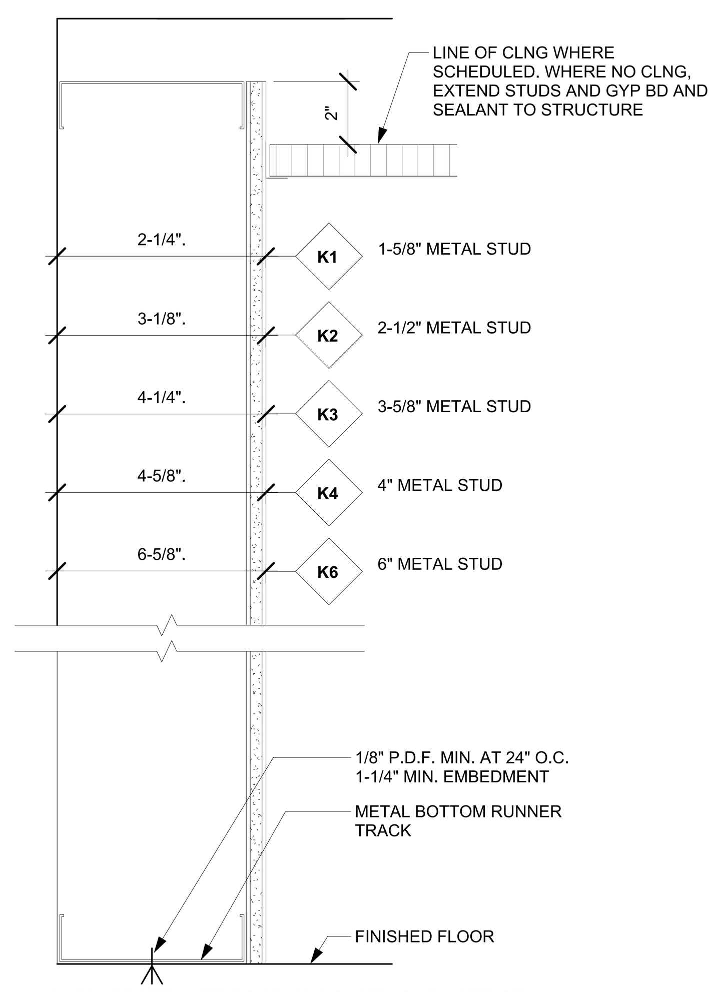

25 GUAGE METAL STUDS AT 16" O.C. WITH ONE LAYER OF 5/8" GYPSUM BOARD FINISHED SIDE.

J / A950 — WALL PARTITION K
SCALE : 3" = 1'-0"

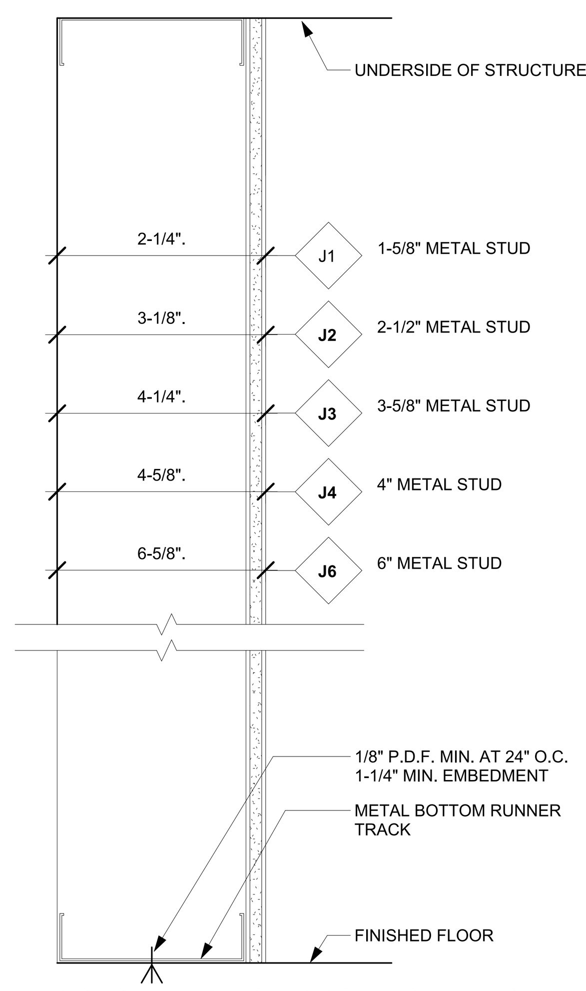

25 GUAGE METAL STUDS AT 16" O.C. WITH ONE LAYER OF 5/8" GYPSUM BOARD FINISHED SIDE.

H / A950 — WALL PARTITION J
SCALE : 3" = 1'-0"

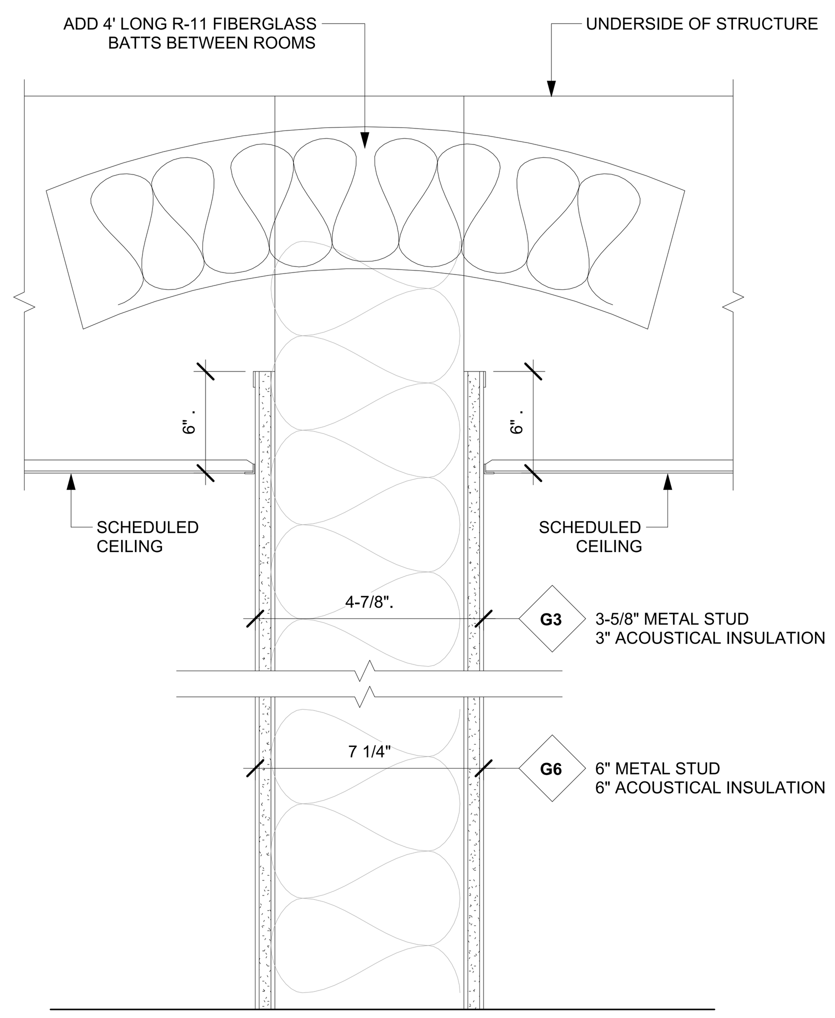

25 GUAGE METAL STUDS AT 16" O.C. WITH ONE LAYER OF 5/8" GYPSUM BOARD EACH SIDE AND ACOUSTICAL INSULATION.

G / A950 — WALL PARTITION G
SCALE : 3" = 1'-0"

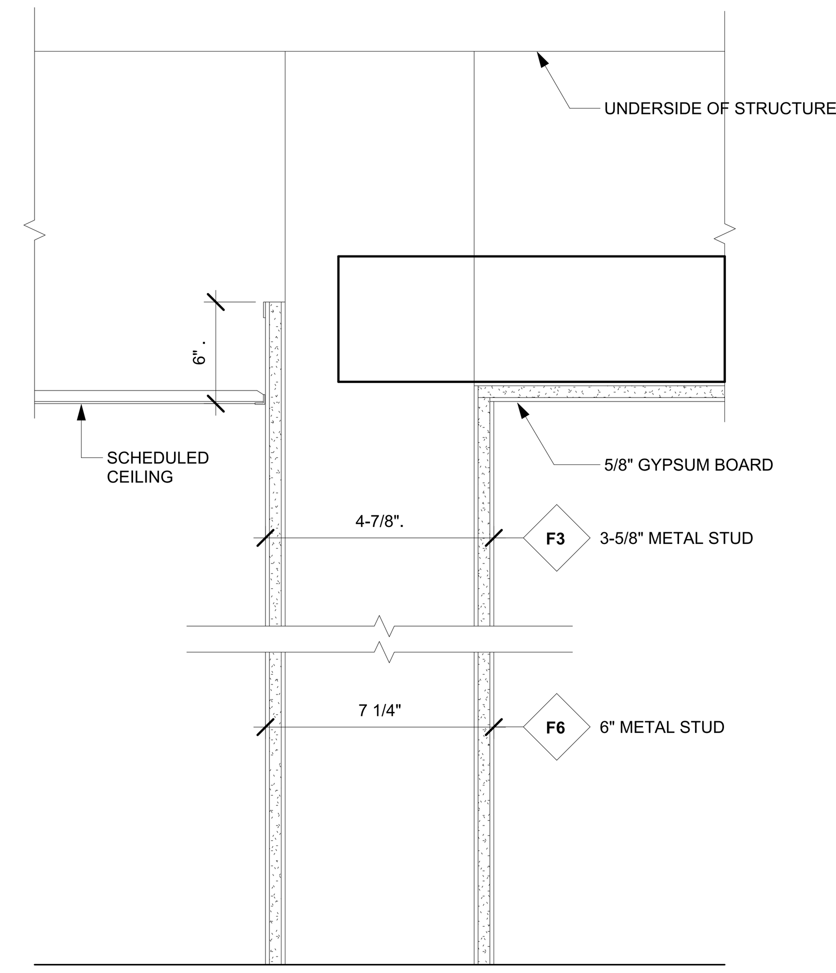

25 GUAGE METAL STUDS AT 16" O.C. WITH ONE LAYER OF 5/8" GYPSUM BOARD EACH SIDE.

F / A950 — WALL PARTITION F
SCALE : 3" = 1'-0"

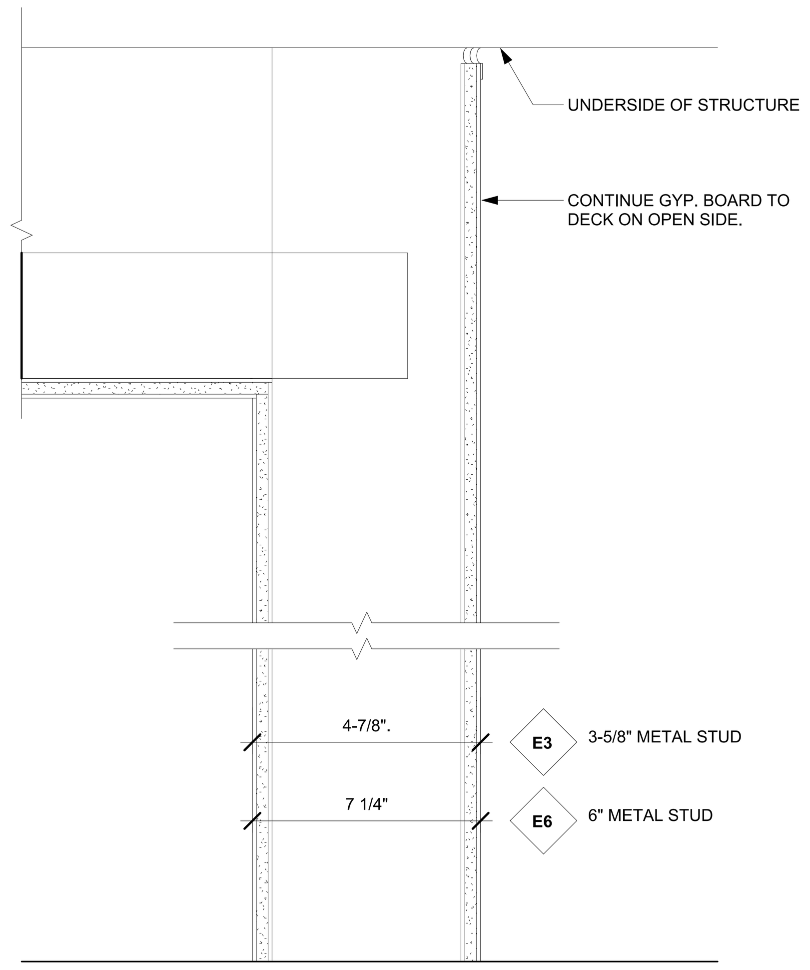

25 GUAGE METAL STUDS AT 16" O.C. WITH ONE LAYER OF 5/8" GYPSUM BOARD EACH SIDE.

E / A950 — WALL PARTITION E
SCALE : 3" = 1'-0"

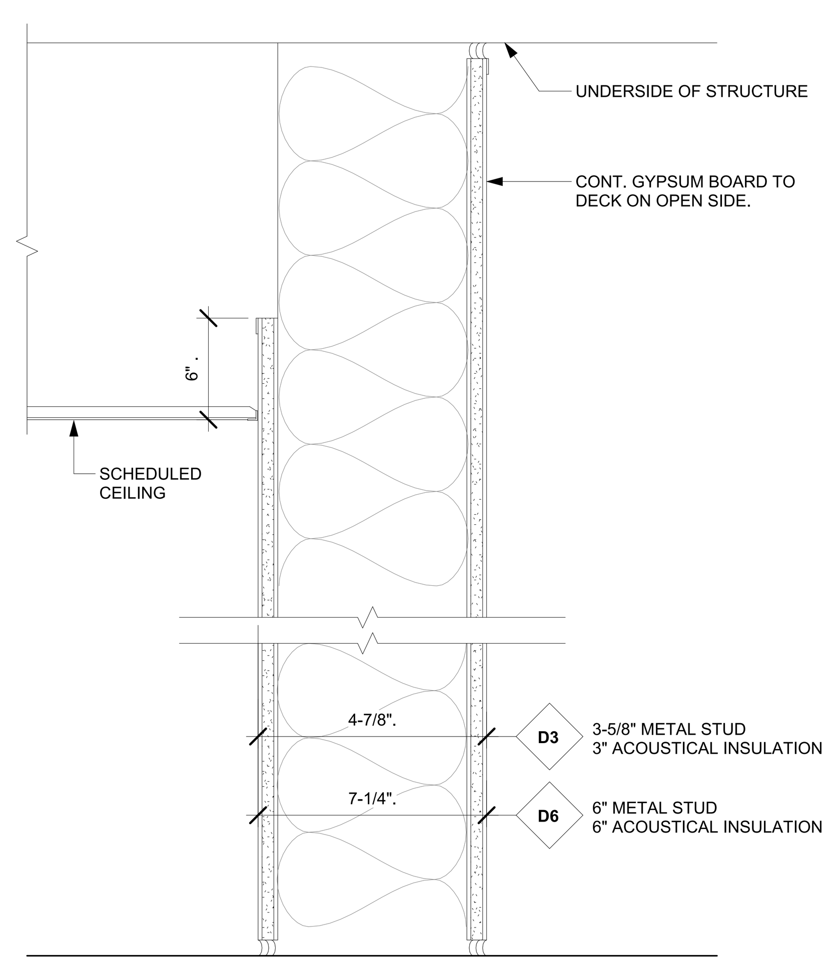

25 GUAGE METAL STUDS AT 16" O.C. WITH ONE LAYER OF 5/8" GYPSUM BOARD EACH SIDE AND ACOUSTICAL INSULATION FULL HEIGHT.

D / A950 — WALL PARTITION D
SCALE : 3" = 1'-0"

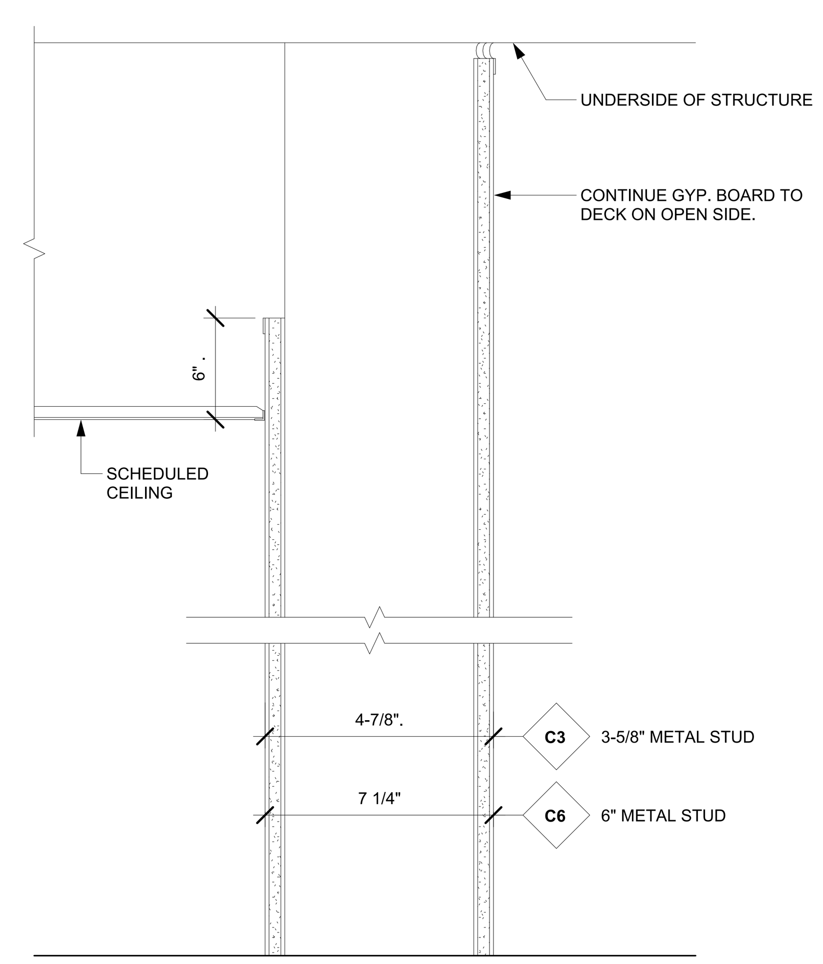

25 GUAGE METAL STUDS AT 16" O.C. WITH ONE LAYER OF 5/8" GYPSUM BOARD EACH SIDE.

C / A950 — WALL PARTITION C
SCALE : 3" = 1'-0"

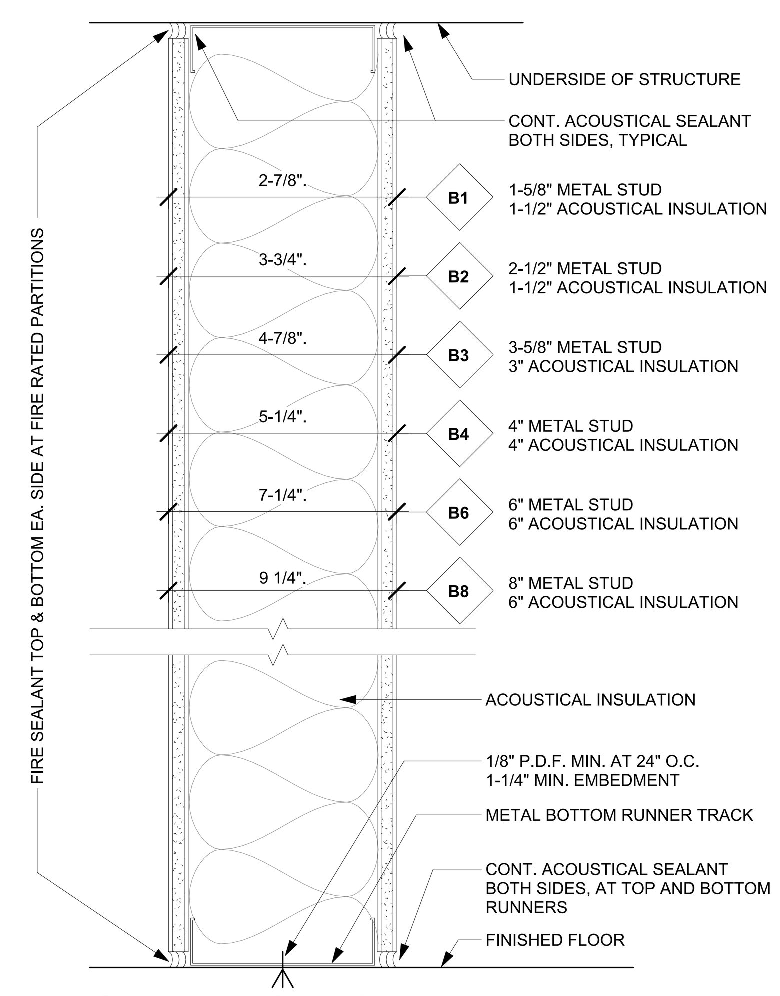

25 GUAGE METAL STUDS AT 16" O.C. WITH ONE LAYER OF 5/8" GYPSUM BOARD EACH SIDE AND ACOUSTICAL INSULATION FULL HEIGHT.

NOTE:
PARTITION IS FIRE RATED ONLY WHEN PARTITION TAG INCLUDES LETTER "R". B6R

B / A950 — WALL PARTITION B
SCALE : 3" = 1'-0"

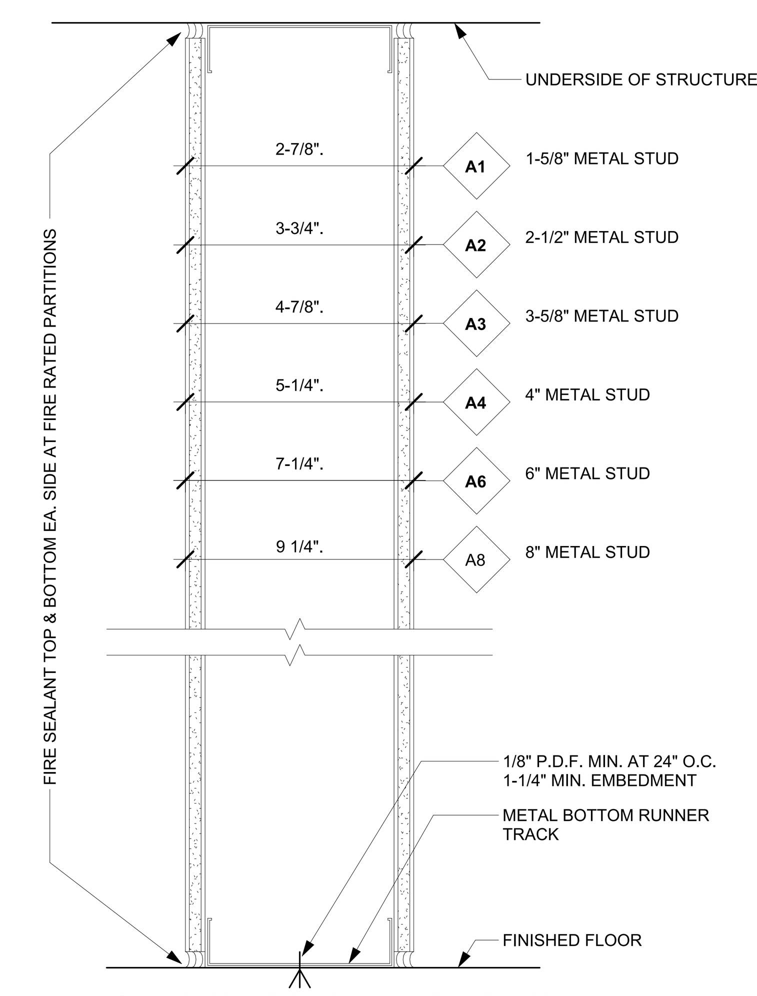

25 GUAGE METAL STUDS AT 16" O.C. WITH ONE LAYER OF 5/8" GYPSUM BOARD EACH SIDE.

NOTE:
PARTITION IS FIRE RATED ONLY WHEN PARTITION TAG INCLUDES LETTER "R". A6R

A / A950 — WALL PARTITION A
SCALE : 3" = 1'-0"

FSGROUP® ARCHITECTS
16575 Village Drive
Houston Texas 77040
713 344 1752 PH
fsdesignbuild.com

PROJECT NAME

INFORMATION TECHNOLGY BUILDING
1419 EUGENE HEIMANN CIRCLE
FORT BEND COUNTY . RICHMOND . TEXAS 77469

CONSULTANTS

PROFESSIONAL SEAL

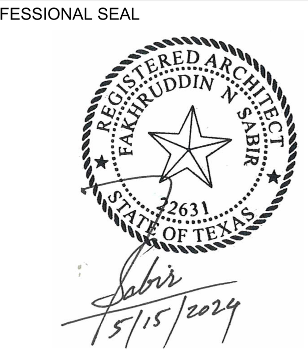

ISSUED FOR
ISSUED FOR PROPOSALS AND PERMIT

REVISIONS

No.	DESCRIPTION	DATE

KEY PLAN

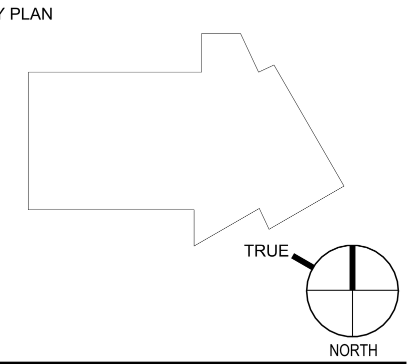

SHEET TITLE
WALL PARTITIONS

SCALE 3" = 1'-0"
DATE 05/15/2024
PROJECT NUMBER 2319
SHEET NUMBER
A950

GENERAL NOTES: PARTITIONS

01 FIRE RESISTANT GYPSUM BOARD:
- FIRE RATED PARTITION CONSTRUCTION MUST CONFORM TO GYPSUM ASSOCIATION (GA) DESIGNS, UNDERWRITERS LABORATORY (UL) TESTED DESIGNS OR OTHER TESTS APPROVED BY GOVERNING CODE AUTHORITIES. FIRE ASSEMBLY DESIGN NUMBERS (I.E., GA WP 1200, UL U465) NOTED ON PARTITION DETAILS SHALL BE FOLLOWED WHEN A FIRE RATED ASSEMBLY IS INDICATED.
- WHEN FIRE RATED PARTITIONS INTERSECT NON-RATED PARTITIONS, CARRY FIRE RATED ASSEMBLY THROUGH NON-RATED CONSTRUCTION.
- CUTOUTS FOR ELECTRICAL DEVICES ON OPPOSITE SIDES OF PARTITIONS IN SAME STUD SPACE IS NOT ALLOWED.
- PROVIDE UL SYSTEM PENETRATION AT PENETRATIONS AND TERMINATIONS IN ACCORDANCE WITH DIVISION 7.
- PROVIDE FIRE STOPPING AND FIRE SAFING AT TOP OF PARTITION TERMINATIONS TO COMPLY WITH FIRE RATING ASSEMBLY AND EXTEND RATING TO STRUCTURAL DECK ABOVE.

02 INSTALL BACKING PLATES AT ALL WALL MOUNTED RAILINGS, TOILET AND SERVICE ACCESSORIES, WALL MOUNTED CASEWORK OR MILLWORK, SYSTEM FURNITURE LOCATIONS AND WALL MOUNTED DOOR BUMPERS. ALSO, PROVIDE BACKING PLATES BEHIND GYPSUM BOARD AT ALL LOCATIONS WHERE HORIZONTAL WOOD TRIM IS TO BE APPLIED.

03 ALL CORRIDOR PARTITIONS TO BE CONSTRUCTED TO RESIST THE PASSAGE OF SMOKE OR TO MEET THE REQUIRED RATING.

04 PROVIDE DEFLECTION OF STRUCTURE AT TERMINATIONS OF PARTITION WITH STRUCTURE ABOVE IN ACCORDANCE TO DIVISIONS 4 AND 9.

05 PROVIDE MOISTURE RESISTANT GYPSUM BOARD ON ALL WALLS IN ALL TOILETS, HOUSEKEEPING ROOMS, SOILED UTILITY ROOMS AND ALL PARTITIONS SCHEDULED TO RECEIVE CERAMIC TILE IN "NON WET" AREAS. REFER TO FINISH SCHEDULES AND FLOOR PLANS FOR LOCATION OF THESE WALLS. IN ADDITION, MOISTURE RESISTANT BOARD WILL BE USED BEHIND AND WITHIN 24" ON EITHER SIDE ADJACENT TO ALL PLUMBING FIXTURES AND DRINKING FOUNTAINS.

06 AT CHASE WALLS, THE SIDE WITH PLUMBING FIXTURES, PROVIDE LARGER (GUAGE AND SPACING) AS REQUIRED TO SUPPORT FIXTURES.

07 UNDERWRITERS LABORATORY AND OTHER TESTING AGENCY DESIGNATIONS INDICATED FOR FIRE RESISTIVE CONSTRUCTION ARE GIVEN FOR PURPOSES OF DESCRIBING CONSTRUCTION REQUIREMENTS ONLY AND NOT INTENDED TO LIMIT MANUFACTURERS OF MATERIALS. COMPLY WITH THE CONSTRUCTION REQUIREMENTS OF THE INDICATED DESIGN.

08 S.T.C. RATING SHOWN FOR SOUND WALLS ARE BASED ON LABORATORY TESTED ASSEMBLIES AND DO NOT NECESSARILY INDICATE THE ACTUAL S.T.C. RATING OF THE COMPLETED WORK.

09 LIMITING HEIGHTS INDICATED GIVE THE MAXIMUM UNSUPPORTED HEIGHT FOR THAT PARTITION TYPE BASED ON A DEFLECTION CRITERIA RATIO OF L / 240. WHERE FLOOR TO STRUCTURE HEIGHT OF PARTITION EXCEEDS THE INDICATED LIMITING HEIGHT. PROVIDE SUPPLEMENTAL BRACING TO THE STRUCTURE OVERHEAD AS REQUIRED TO MAINTAIN DEFLECTION RATIO WITHIN L / 240.

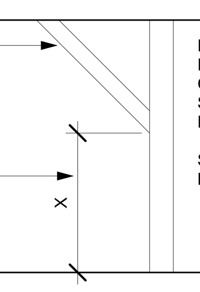

FOR PARTITIONS WITH "BRITTLE" FINISHES, SUCH AS PLASTER AND CERAMIC TILE, DESIGN PARTITION SYSTEM TO MAINTAIN DEFLECTION RATION WITHIN L / 360.

SUSPENDED CEILINGS SHALL NOT BE CONSIDERED AS BRACING.

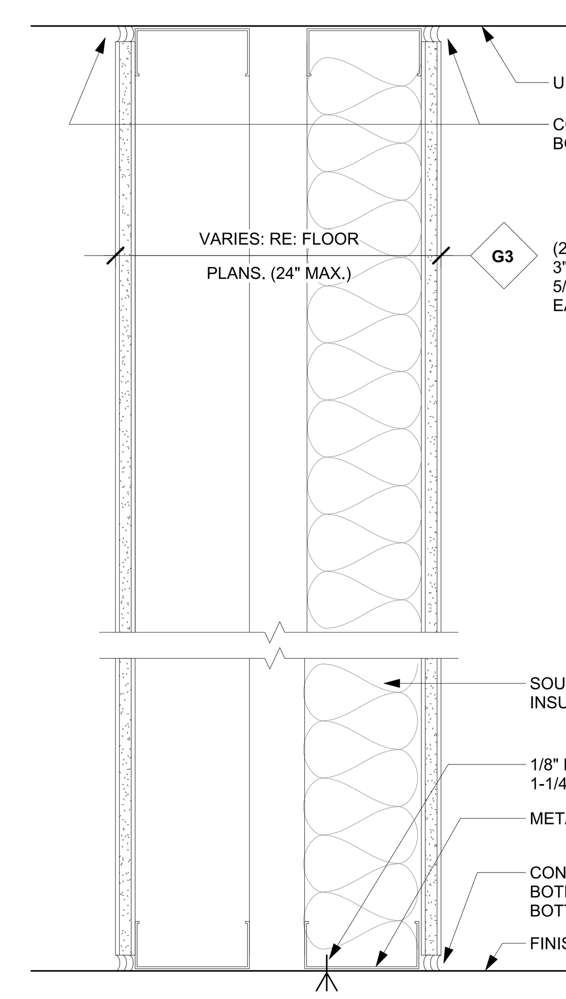

25 GUAGE METAL STUDS AT 16" O.C. WITH ONE LAYER OF 5/8" GYPSUM BOARD EACH SIDE AND ACOUSTICAL INSULATION FULL HEIGHT.

PARTITION TYPE	LIMITING HEIGHT	FIRE RATING	S.T.C. RATING
G3	19' - 3'	1 HR UL U420	--

NOTE:
PARTITION IS FIRE RATED ONLY WHEN PARTITION TAG INCLUDES LETTER "R". G3R

L / A951 WALL PARTITION G
SCALE : 3" = 1'-0"

SHAFT SIDE

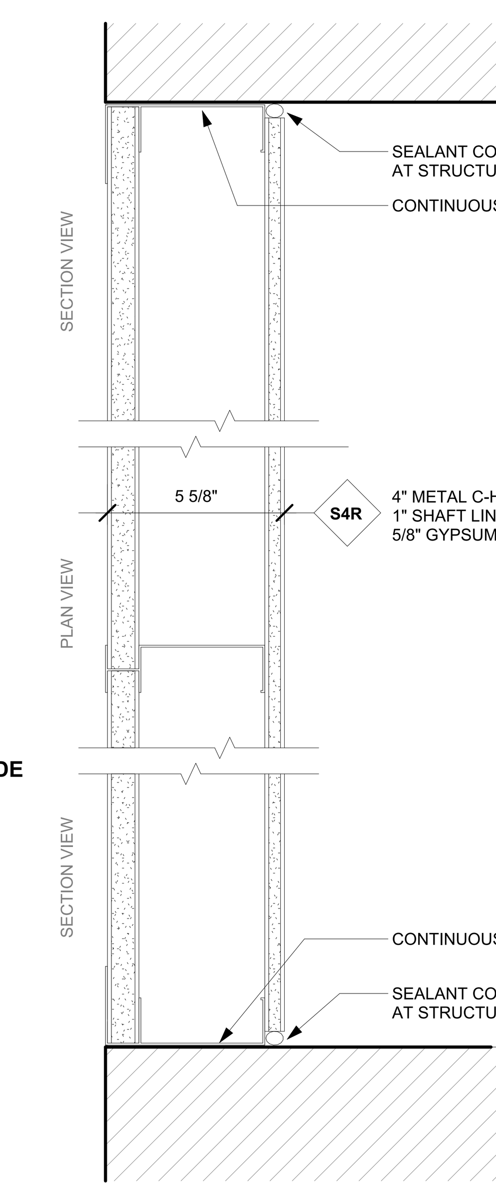

25 GUAGE METAL C-H STUD AT 24" O.C. WITH 1" SHAFT LINER AND 5/8" GYPSUM BOARD ON FINISH SIDE.

PARTITION TYPE	LIMITING HEIGHT	FIRE RATING	S.T.C. RATING
S4R	13' - 3'	2 HR UL U492	--

NOTE:
PARTITION IS FIRE RATED ONLY WHEN PARTITION TAG INCLUDES LETTER "R".

K / A951 WALL PARTITION S
SCALE : 3" = 1'-0"

FSGROUP® ARCHITECTS
16575 Village Drive
Houston Texas 77040
713 344 1752 PH
fsdesignbuild.com

PROJECT NAME

THE STATE OF TEXAS FORT BEND COUNTY

INFORMATION TECHNOLGY BUILDING
1419 EUGENE HEIMANN CIRCLE
FORT BEND COUNTY . RICHMOND . TEXAS 77469

CONSULTANTS

PROFESSIONAL SEAL

REGISTERED ARCHITECT FAKHRUDDIN N. SABIR 22631 STATE OF TEXAS
5/15/2024

ISSUED FOR
ISSUED FOR PROPOSALS AND PERMIT

REVISIONS

No.	DESCRIPTION	DATE

KEY PLAN

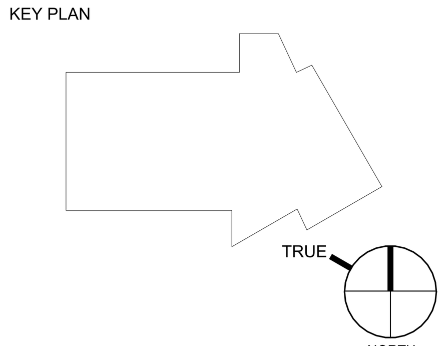

SHEET TITLE
WALL PARTITIONS

SCALE 3" = 1'-0"
DATE 05/15/2024
PROJECT NUMBER 2319
SHEET NUMBER
A951

FILE PATH: Autodesk Docs://FBC IT Building/FBIT_A23.rvt
PLOT DATE: 5/21/2024 5:33:00 PM

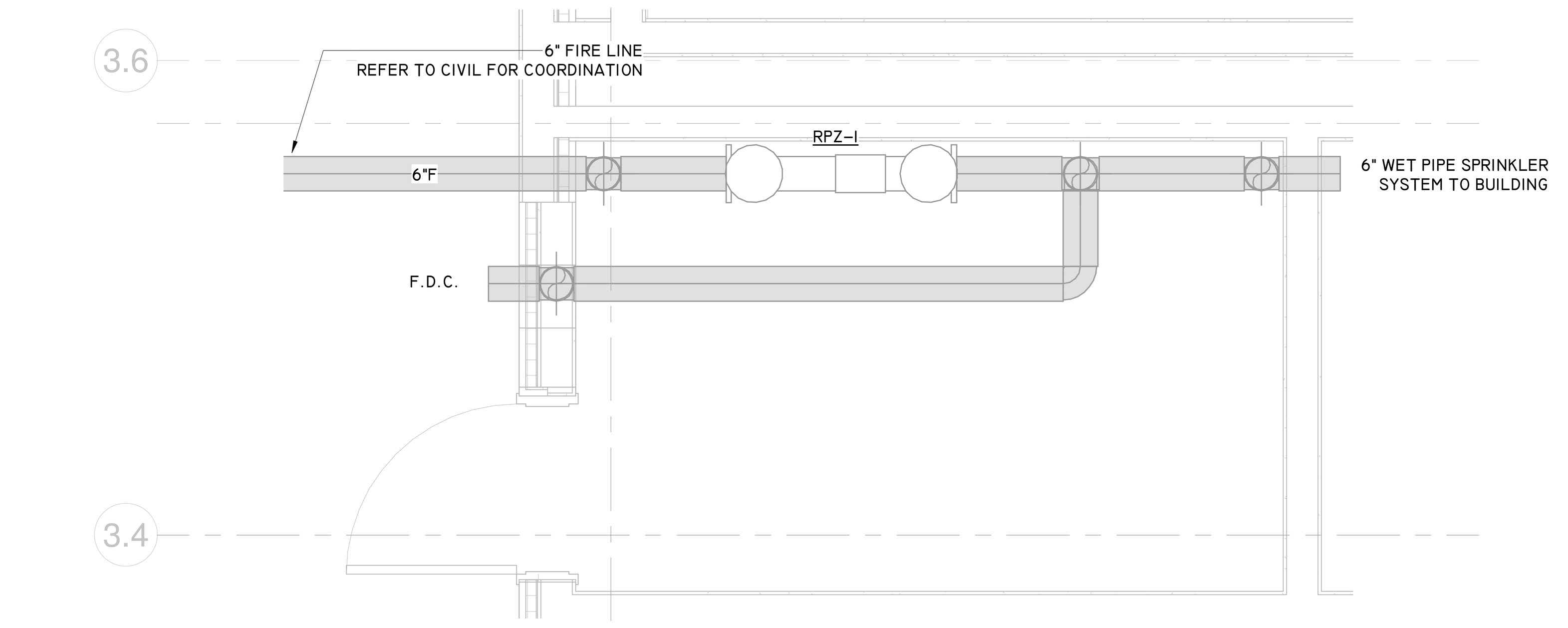

2 FP101 ENLARGED FIRE RISER ROOM
SCALE : 1/2" = 1'-0"

FIRE PROTECTION NOTES

1. CONTRACTOR SHALL PROVIDE THE HYDRAULIC DESIGN BY A QUALIFIED FIRE PROTECTION ENGINEER IN STATE OF TEXAS. THE CONTRACTOR SHALL SUPPLY AND INSTALL THE SPRINKLER SYSTEM FOR THE ENTIRE AREA, IN ACCORDANCE WITH NFPA 13, NFPA 13R AND CITY OF RICHMOND FIRE DEPARTMENT. CONTRACTOR SHALL BE RESPONSIBLE TO COORDINATE THE WORK WITH ALL OTHER SERVICES INCLUDING, BUT NOT LIMITED TO MECHANICAL, ELECTRICAL, PLUMBING, STRUCTURE AND ARCHITECTURE SERVICES.
2. BEFORE INSTALLING ANY SPRINKLER ROWS AND HEADS, COORDINATE WITH OTHER SERVICES AND EQUIPMENT LOCATIONS.
3. MAIN ENTRY PIPING LINE INDICATED ON DRAWINGS IS SHOWN AS GENERAL GUIDE AND DOES NOT REPRESENT ACTUAL BID DOCUMENTS. CONTRACTOR SHALL BE RESPONSIBLE FOR A COMPLETE SYSTEM DESIGN AND INSTALLATION OF ALL THE FACILITY.
4. SPRINKLER SYSTEM SHALL BE WET PIPE SYSTEM FOR INDOOR AREA CO-ORDINATED WITH FIRE AND DETECTION SYSTEM FOR INTERLOCK. IN ACCORDANCE WITH CODE REQUIRED HAZARD PROTECTION.
5. ALL FIRE PROTECTION PIPING EXPOSED SHALL BE PAINTED RED.

NOTE:

SPRINKLER SHOP DRAWINGS AND HYDRAULIC CALCULATIONS PREPARED BY A LICENSED SPRINKLER CONTRACTOR (TEXAS RME) SHALL BE SUBMITTED TO THE FIRE LOCAL MARSHALL AND OWNER'S INSURANCE CARRIER FOR REVIEW AND APPROVAL, NO WORK SHALL BEGIN UNTIL THE APPROVAL OF BOTH AUTHORITIES INDICATED ABOVE.

RPZ SCHEDULE

MARK	DESCRIPTION	SIZE OF CONNECTION					REMARKS
		TRAP	SS	SV	CW	HW	
RPZ-1	REDUCED PRESSURE ZONE ASSEMBLY	-	-	-	4"	-	957Z-OSY WATTS, THE REDUCED PRESSURE ZONE ASSEMBLY SHALL CONSIST OF TWO INDEPENDENT TORSION SPRING CHECK MODULES, A DIFFERENTIAL PRESSURE RELIEF VALVE LOCATED BETWEEN AND BELOW THE TWO MODULES, TWO DRIP TIGHT SHUTOFF VALVES, AND REQUIRED TORSION SPRING CHECK MODULES AND RELIEF VALVE SHALL BE CONTAINED WITH A SLEEVE ACCESSIBLE SINGLE HOUSING CONSTRUCTED FROM 304 (SCHEDULE 40) STAINLESS STEEL PIPE WITH GROOVE END CONNECTIONS. TORSION SPRING CHECKS SHALL HAVE REPLACEABLE ELASTOMER DISCS AND IN OPERATION PRODUCE DRIP TIGHT CLOSURE AGAINST THE REVERSE FLOW OF LIQUID CAUSED BY BACKPRESSURE OR BACKSIPHONAGE. ASSEMBLY SHALL BE A WATTS REGULATOR COMPANY SERIES 957, 957N, 957Z.

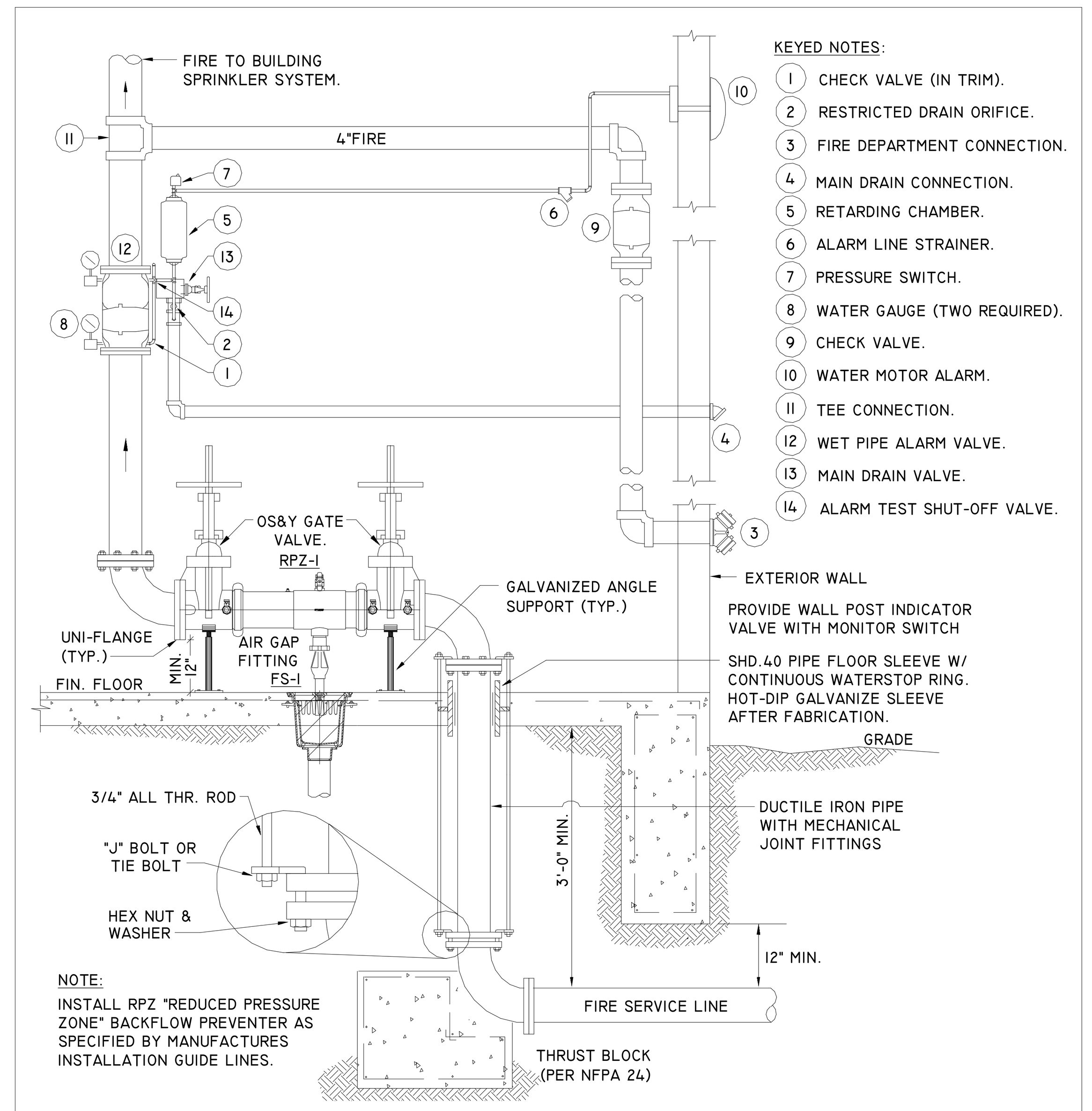

KEYED NOTES:

1. CHECK VALVE (IN TRIM).
2. RESTRICTED DRAIN ORIFICE.
3. FIRE DEPARTMENT CONNECTION.
4. MAIN DRAIN CONNECTION.
5. RETARDING CHAMBER.
6. ALARM LINE STRAINER.
7. PRESSURE SWITCH.
8. WATER GAUGE (TWO REQUIRED).
9. CHECK VALVE.
10. WATER MOTOR ALARM.
11. TEE CONNECTION.
12. WET PIPE ALARM VALVE.
13. MAIN DRAIN VALVE.
14. ALARM TEST SHUT-OFF VALVE.

NOTE:
INSTALL RPZ "REDUCED PRESSURE ZONE" BACKFLOW PREVENTER AS SPECIFIED BY MANUFACTURES INSTALLATION GUIDE LINES.

FIRE ALARM CHECK VALVE DETAIL
REDUCED PRESS. BACKFLOW PREVENTER DETAIL (RPZ-1)
FIRE SERVICE ENTRY DETAIL
NOT TO SCALE
1

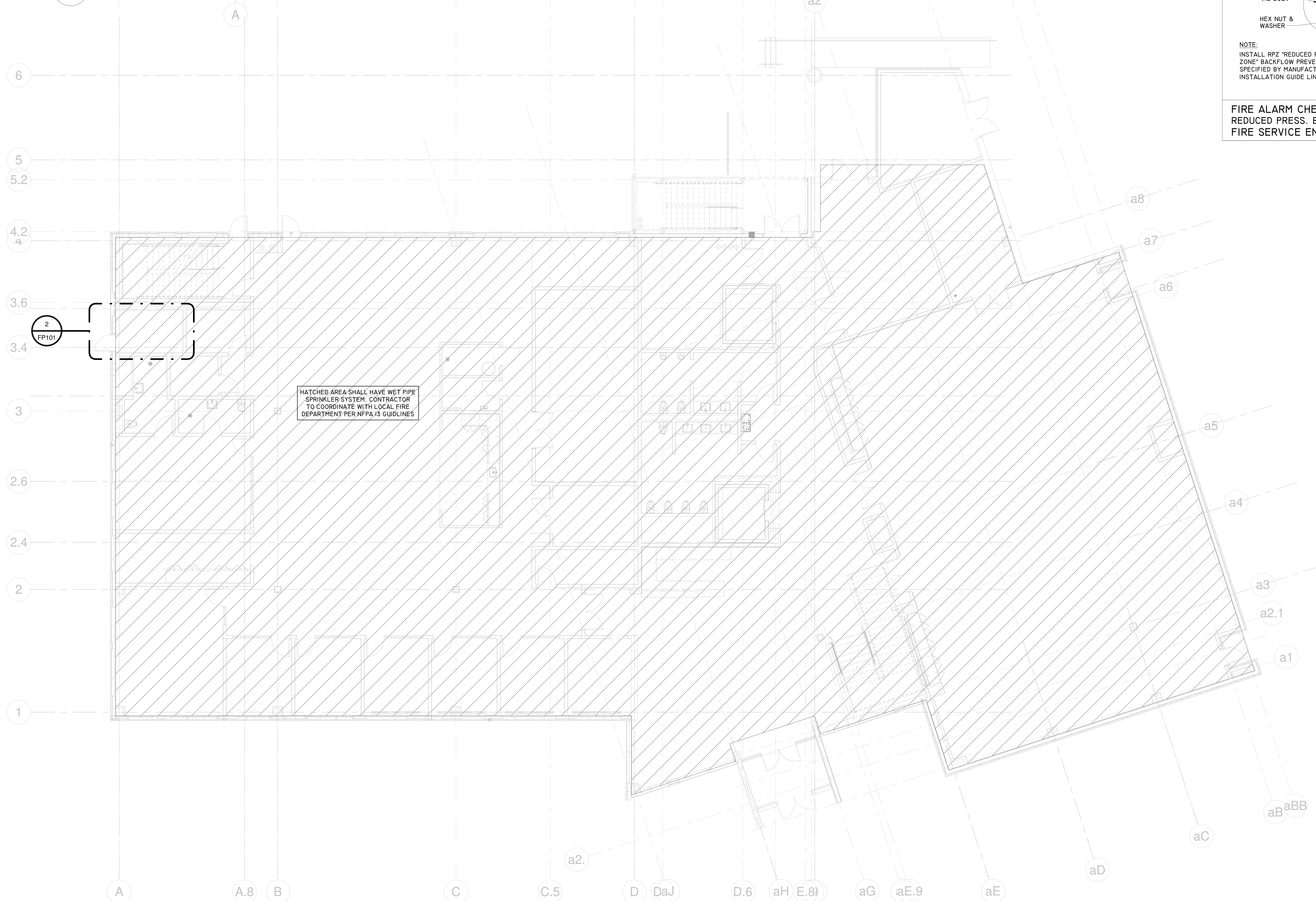

1 FP101 LEVEL 1 - FLOOR PLAN - FIRE PROTECTION
SCALE : 1/8" = 1'-0"

FSGROUP
ARCHITECTS
13105 Northwest Fwy Suite 1110
Houston Texas 77040
713 344 1752 Office
www.fsdesignbuild.com

PROJECT NAME

INFORMATION TECHNOLGY BUILDING
EUGENE HEIMANN CIRCLE
FORT BEND COUNTY . TEXAS

CONSULTANTS

Infrastructure Associates
INFRASTRUCTURE ASSOCIATES, INC.
6117 RICHMOND AVENUE, SUITE 200
HOUSTON, TEXAS 77057-6267
(713) 622-0120 PH (713) 622-0557 FAX
TBPE FIRM REGISTRATION #F-4506
WWW.IAHOUSTON.COM

PROFESSIONAL SEAL

ANWAR HASSAN
64671
LICENSED
PROFESSIONAL ENGINEER
2024-05-15

ISSUED FOR

ISSUED FOR PROPOSALS AND PERMIT

REVISIONS

No.	DESCRIPTION	DATE

KEY PLAN

TRUE
NORTH

SHEET TITLE

FIRE PROTECTION PLAN

SCALE
As indicated

DATE
05/15/2024

PROJECT NUMBER
2319

SHEET NUMBER

FP101

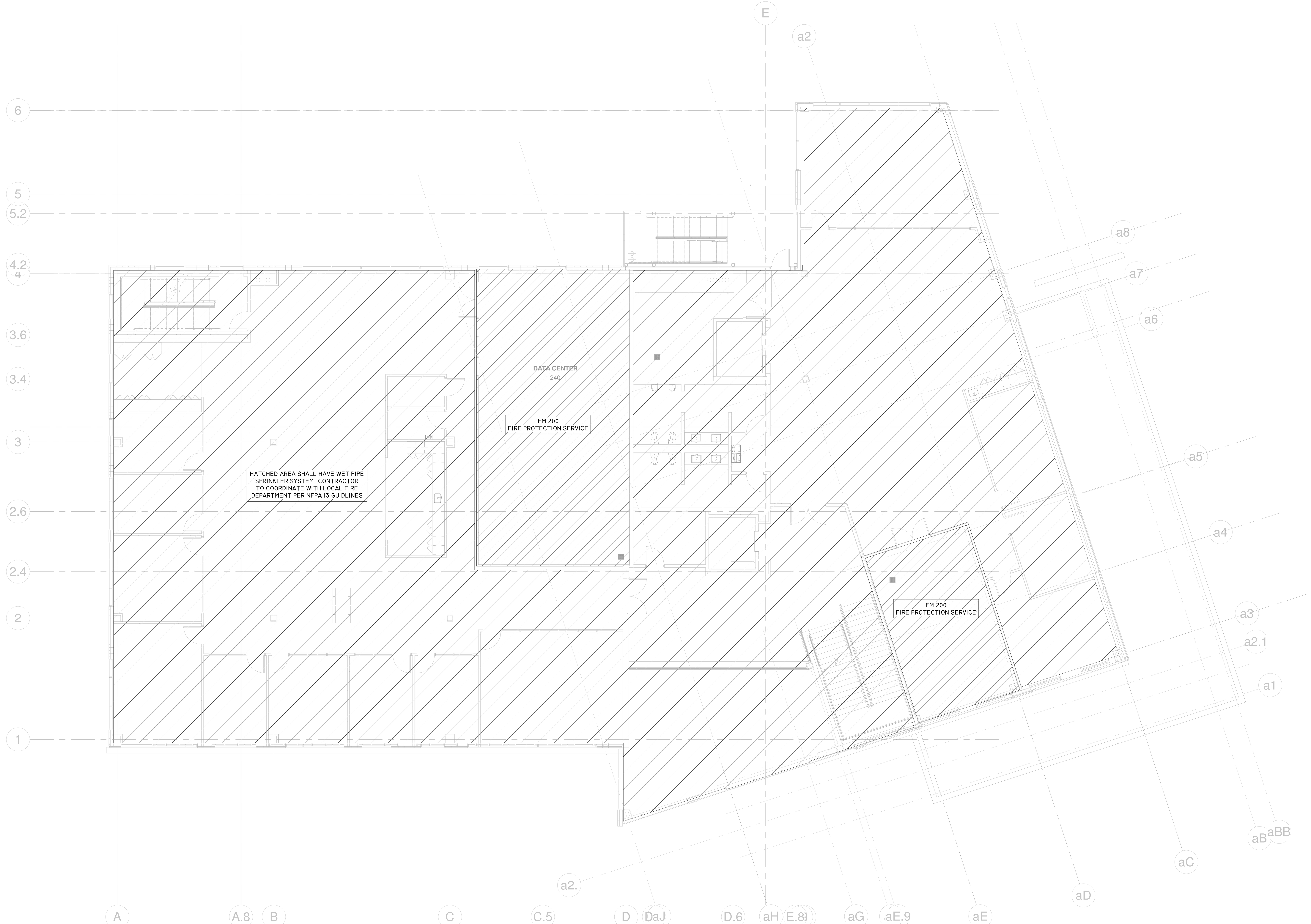

1
FP102

LEVEL 2 - FLOOR PLAN - FIRE PROTECTION

SCALE : 1/8" = 1'-0"

FSGROUP
ARCHITECTS
13105 Northwest Fwy Suite 1110
Houston Texas 77040
713 344 1752 Office
www.fsdesignbuild.com

PROJECT NAME

INFORMATION TECHNOLGY BUILDING
EUGENE HEIMANN CIRCLE
FORT BEND COUNTY . TEXAS

CONSULTANTS

Infrastructure Associates
INFRASTRUCTURE ASSOCIATES, INC.
6117 RICHMOND AVENUE, SUITE 200
HOUSTON, TEXAS 77057-6267
(713) 622-0120 PH (713) 622-0557 FAX
TBPE FIRM REGISTRATION #F-4506
WWW.IAHOUSTON.COM

PROFESSIONAL SEAL

STATE OF TEXAS
ANWAR HASSAN
64671
LICENSED
PROFESSIONAL ENGINEER
2024-05-15

ISSUED FOR

ISSUED FOR PROPOSALS AND PERMIT

REVISIONS

No.	DESCRIPTION	DATE

KEY PLAN

TRUE
NORTH

SHEET TITLE

FIRE PROTECTION PLAN

SCALE
1/8" = 1'-0"

DATE
05/15/2024

PROJECT NUMBER
2319

SHEET NUMBER

FP102

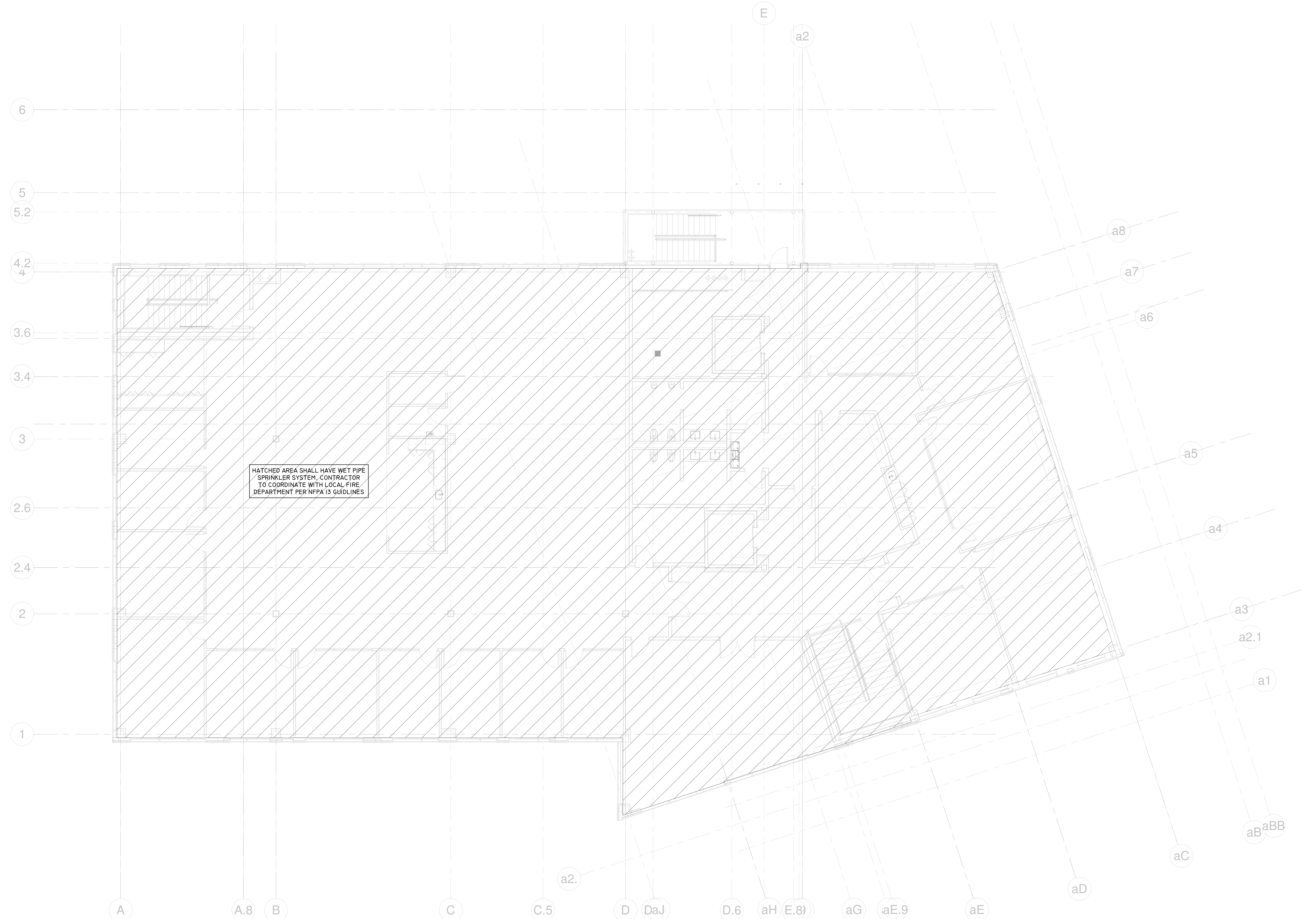

1
FP103
LEVEL 3 - FLOOR PLAN - FIRE PROTECTION
SCALE : 1/8" = 1'-0"

FSGROUP® ARCHITECTS
13105 Northwest Fwy Suite 1110
Houston Texas 77040
713 344 1752 Office
www.fsdesignbuild.com

PROJECT NAME

THE STATE OF TEXAS · FORT BEND COUNTY

INFORMATION TECHNOLGY BUILDING
EUGENE HEIMANN CIRCLE
FORT BEND COUNTY . TEXAS

CONSULTANTS

Infrastructure Associates
INFRASTRUCTURE ASSOCIATES, INC.
6117 RICHMOND AVENUE, SUITE 200
HOUSTON, TEXAS 77057-6267
(713) 622-0120 PH (713) 622-0557 FAX
TBPE FIRM REGISTRATION #F-4506
WWW.IAHOUSTON.COM

PROFESSIONAL SEAL

STATE OF TEXAS
ANWAR HASSAN
64671
LICENSED
PROFESSIONAL ENGINEER
2024-05-15

ISSUED FOR
ISSUED FOR PROPOSALS AND PERMIT

REVISIONS

No.	DESCRIPTION	DATE

KEY PLAN

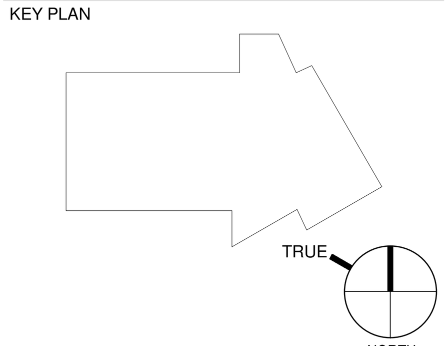

SHEET TITLE
FIRE PROTECTION PLAN

SCALE 1/8" = 1'-0"
DATE 05/15/2024
PROJECT NUMBER 2319
SHEET NUMBER
FP103

PLUMBING LEGEND & ABBREVIATIONS

DISREGARD LEGEND ITEMS NOT INDICATED ON DRAWINGS

	NEW PLUMBING FIXTURE
SAN / S	SANITARY WASTE
STORM / ST	STORM DRAINAGE LINE
C.D.	CONDENSATE DRAIN LINE
GW	GREASE WASTE
AW	ACID WASTE
CHEM-W	CHEMICAL WASTE
V	VENT
FIRE	FIRE LINE
DIS	DEIONIZED WATER SUPPLY
DIR	DEIONIZED WATER RETURN
SW	SOFT WATER
CW	DOMESTIC COLD WATER PIPING
HW	DOMESTIC HOT WATER PIPING
HWR	DOMESTIC HOT WATER RETURN PIPING
TW	TEMPERED WATER PIPING
TWR	TEMPERED WATER RETURN PIPING
NPW(C)	NON POTABLE WATER (COLD)
HPW(H)	NON POTABLE WATER (HOT)
DI	DEIONIZED WATER
NG / G	NATURAL GAS
LA	NATURAL GAS
VAC	NATURAL GAS
N2	NATURAL GAS
FCO	FLOOR CLEAN OUT
ECO	EXTERIOR CLEANOUT
WCO	WALL CLEANOUT
FD	FLOOR DRAIN
FS	FLOOR SINK
	RISER IDENTIFICATION
	ELBOW UP
	ELBOW DOWN
	CAP AND SEAL
	BALL VALVE
B.V.	BALANCING VALVE
	GAS VALVE
C.V.	CHECK VALVE
	SOLENOID VALVE
	FLOW SWITCH
TP	AUTOMATIC TRAP PRIMER
BFP	BACKFLOW PREVENTER
VTR	VENT THROUGH ROOF
F.F.L.	FINISHED FLOOR LEVEL
I.L.	INVERT LEVEL
A.R.F.	ABOVE FINISHED ROOF
(E)	EXISTING TO REMAIN
(OF)	OVERFLOW STORM DRAINAGE
(P)	PRIMARY STORM DRAINAGE
T.A.S	TEXAS ACCESSIBILITY STANDARDS

PIPING MATERIALS

1. **SANITARY WASTE AND VENT PIPING** (BELOW GRADE)
SCHEDULE 40 PVC, CONFORM TO ASTM D-1785 SOIL AND WASTE VENT PIPING. FITTINGS SHALL BE COMPATIBLE MATERIAL WITH SOLVENT CEMENT TYPE JOINTS.

2. **SANITARY WASTE AND VENT PIPING** (ABOVE SLAB ONLY)
PIPE: CAST IRON ASTM A 74, HUBLESS, SERVICE WEIGHT.

JOINTS: NO HUB, ASTM C 564 NEOPRENE GASKETS AND STANDARD STAINLESS STEEL CLAMP AND SOLID SHIELD ASSEMBLIES CONSTRUCTED OF TYPE 300 SERIES STAINLESS STEEL. CLAMP ASSEMBLIES SHALL CONFORM TO FM 1680 WHERE REQUIRED BY THE ADMINISTRATIVE AUTHORITY.

FITTINGS: CAST IRON, ASTM A 888 DRAINAGE PATTERN.

3. **STORM DRAINAGE** (BELOW GRADE)
SCHEDULE 40 PVC, CONFORM TO ASTM D-1785 SOIL AND WASTE VENT PIPING. FITTINGS SHALL BE COMPATIBLE MATERIAL WITH SOLVENT CEMENT TYPE JOINTS.

STORM DRAINAGE (ABOVE SLAB ONLY)
PIPE: CAST IRON ASTM A 74, HUBLESS, SERVICE WEIGHT.

JOINTS: NO HUB, ASTM C 564 NEOPRENE GASKETS AND STANDARD STAINLESS STEEL CLAMP AND SOLID SHIELD ASSEMBLIES CONSTRUCTED OF TYPE 300 SERIES STAINLESS STEEL. CLAMP ASSEMBLIES SHALL CONFORM TO FM 1680 WHERE REQUIRED BY THE ADMINISTRATIVE AUTHORITY.

FITTINGS: CAST IRON, ASTM A 888 DRAINAGE PATTERN.

4. **DOMESTIC WATER**
TYPE "L" COPPER TUBING WITH WROUGHT COPPER FITTINGS AND 95/5 (TIN/ANTIMONY) SOLDER JOINTS.

GENERAL NOTES

BOOK SPECIFICATION SUPERCEDE ANY NOTES BELOW

1. THESE DRAWINGS ARE SCHEMATIC IN NATURE AND ARE NOT INTENDED TO SHOW ALL OFFSETS. INSTALL PIPING AS CLOSE AS POSSIBLE TO LOCATIONS SHOWN. WHERE INTERFERENCE'S WITH COMPONENTS OF OTHER TRADE'S WORK (STRUCTURAL FOUNDATIONS OR OTHER BUILDING ELEMENTS) REQUIRE ROUTINGS AND LOCATIONS THAT VARY FROM THOSE SHOWN, THE CONTRACTOR SHALL OBTAIN PROJECT ENGINEER'S APPROVAL PRIOR TO INSTALLATION. NO ADDITIONAL COST SHALL BE GRANTED FOR THESE CHANGES.
2. BEFORE BEGINNING EXCAVATIONS OR DEMOLITION OF ANY NATURE WHATSOEVER, CONTRACTOR SHALL LOCATE ALL SERVICES AND UTILITIES OCCURRING WITHIN THE BOUNDS OF THE PROJECT. THE CONTRACTOR SHALL THEN PROCEED WITH CAUTION IN HIS WORK SO THAT NO UTILITY OR LINE SERVING AREAS THAT ARE TO REMAIN BE DAMAGED WITH A RESULTANT LOSS OF SERVICE. VERIFY THE SOURCE AND SERVICE OF EACH AND EVERY LINE ENCOUNTERED AND RECORD SERVICE, SIZE AND LOCATION ON RECORD DRAWINGS.
3. ROUGH-IN PLUMBING PIPING USING DIMENSIONS SHOWN ON ARCHITECTURAL DRAWINGS. LOCATION OF ALL PIPING SHALL ALLOW INSTALLATION OF FIXTURES WITHOUT THE NEED TO FURR-OUT WALLS.
4. PROVIDE CLEANOUTS IN EXCESS OF THOSE SHOWN WHICH ARE REQUIRED BY THE PLUMBING CODE. CONTRACTOR SHALL PROVIDE A COVER STATING WHAT SYSTEM IT IS SERVING. <u>(CLEANOUT SANITARY, CLEANOUT GREASE WASTE, CLEANOUT ACID WASTE.)</u>
5. INDIVIDUAL FIXTURE SUPPLY AND DRAIN SERVICES ARE NOT SHOWN DUE TO DRAWING SPACE LIMITATIONS. THIS CONTRACTOR SHALL PROVIDE ALL SERVICES FOR A COMPLETE FIRST CLASS INSTALLATION.
6. FURNISH AND INSTALL ALL NECESSARY VALVES, TRAPS, GAUGES, STRAINERS, UNIONS, ETC. FOR EACH PIECE OF EQUIPMENT HAVING PLUMBING CONNECTIONS TO FACILITATE PROPER FUNCTIONING AND SERVICING.
7. SEAL ALL PENETRATIONS THROUGH RATED WALLS, FLOORS AND CEILINGS WITH A UL LISTED ASSEMBLY TO PROVIDE A RATING EQUAL TO OR GREATER THAN THE RATING OF THE WALL, FLOOR OR CEILING.
8. EACH CONTRACTOR SHALL VISIT THE SITE AND ASCERTAIN FOR HIMSELF THE CONDITIONS TO BE MET THERE IN IMPLEMENTING HIS WORK AND MAKE DUE PROVISIONS FOR THE SAME. IT IS ASSUMED THAT THE CONTRACTOR HAS VISITED THE PREMISES AND THAT HIS COST ESTIMATE COVERS ALL NECESSARY LABOR AND MATERIALS TO PROPERLY ACCOMPLISH HIS WORK. FAILURE ON THE PART OF THE CONTRACTOR TO COMPLY WITH THIS REQUIREMENT SHALL NOT BE CONSIDERED JUSTIFICATION FOR OMISSIONS OR FAULTY WORK OR FOR THE PAYMENT OF ADDITIONAL COMPENSATION.
9. FIELD VERIFY EXISTING AND FUTURE GRADES WITHIN AREAS WHERE WORK IS BEING DONE.
10. VERIFY EXACT LOCATION OF EQUIPMENT PRIOR TO INSTALLATION OF FLOOR DRAINS AND FLOOR SINKS. RELOCATION DUE TO MISPLACEMENT SHALL BE AT CONTRACTORS EXPENSE.
11. PROVIDE A KEYED ACCESS PANELS FOR ALL VALVES AND APPARATUSES THAT REQUIRE MAINTENANCE.
12. A WATER HAMMER ARRESTOR SHALL BE INSTALLED FOR ALL SINGLE AND MULTIPLE FIXTURE BRANCH LINES. WATER HAMMER ARRESTORS SHALL BE INSTALLED IN ACCORDANCE WITH THE MANUFACTURER'S SPECIFICATIONS AND CONFORM TO ASSE 1010. PROVIDE FOR HOT WATER AND COLD WATER LINES AND REFER TO WATER HAMMER ARRESTOR DETAIL FOR MORE INFORMATION AND SIZING.
13. INSULATE PIPING AS FOLLOWS:
DOMESTIC COLD WATER PIPING:
INSULATE AND VAPOR SEAL ALL COLD AND SOFTENED WATER PIPE WITH GLASS FIBER PIPE INSULATION. (EXCEPTION : ALL PIPING EXPOSED TO THE EXTERIOR SHALL BE PROVIDED WITH ALUMINUM).
DOMESTIC HOT WATER PIPING:
INSULATE ALL HOT WATER PIPE WITH GLASS FIBER PIPE INSULATION WITH FACTORY-APPLIED WHITE JACKET.
DRAINS:
INSULATE AND VAPOR SEAL ALL ABOVEGROUND P-TRAPS AND HORIZONTAL DRAIN PIPING RECEIVING CONDENSATE OR ICE MAKER DRAINAGE WITH 1/2" GLASS PER FIBER INSULATION.
INSULATE AND VAPOR SEAL ROOF DRAIN AND OVERFLOW ROOF DRAIN SUMP, PIPING AND FITTINGS FROM DRAIN TO VERTICAL LEADER WITH 1/2" GLASS FIBER INSULATION.
A.D.A. ACCESSIBLE LAVATORIES AND SINKS:
INSULATE ALL EXPOSED DRAIN PIPING AND WATER SUPPLY PIPING BENEATH A.D.A. COMPLIANT LAVATORIES & SINKS WITH FULLY MOLDED CLOSED CELL VINYL INSULATION KIT AS MANUFACTURED BY TRUEBRO, BROCAR OR MCGUIRE.
14. SUPPORT UNBURIED PIPE AS FOLLOWS:
HORIZONTAL PIPING:
HUBLESS CAST IRON SOIL PIPING SHALL BE SUPPORTED AT LEAST AT EVERY OTHER JOINT EXCEPT THAT WHEN THE DEVELOPED LENGTH BETWEEN SUPPORTS EXCEEDS FOUR FEET, THEY SHALL BE PROVIDED AT EACH JOINT. SUPPORTS SHALL ALSO BE PROVIDED AT EACH HORIZONTAL BRANCH CONNECTION. SUPPORTS SHALL BE PLACED IMMEDIATELY ADJACENT TO THE COUPLING. SUSPENDED LINES SHALL BE BRACED TO PREVENT HORIZONTAL MOVEMENT.
COPPER TUBING SHALL BE SUPPORTED AT NOT MORE THAN SIX FOOT INTERVALS FOR PIPING 1-1/2" AND SMALLER AND NINE FOOT INTERVALS FOR PIPING 2" AND LARGER IN DIAMETER.
HANGERS FOR NON-INSULATED COPPER PIPING SHALL HAVE A COPPER FINISH. IN POTENTIALLY DAMP LOCATIONS, NON-INSULATED COPPER PIPING HANGERS OR SUPPORTS SHALL BE PLASTIC-COATED.
STEEL PIPING SHALL BE SUPPORTED AT INTERVALS OF NO GREATER THAN 6 FEET FOR 1/2" PIPING, 8 FEET FOR 3/4" & 1" PIPING AND 10 FEET FOR 1-1/4" AND LARGER PIPING.
VERTICAL PIPING:
PROVIDE RISER CLAMP AT BASE AND AT EACH FLOOR LEVEL
15. MARKING AND IDENTIFICATION:
IDENTIFY EACH PIPE WITH LABELING AT THE FOLLOWING LOCATIONS:
-AT EACH BRANCH TAKE-OFF FROM A MAIN
-ON EACH SIDE OF A WALL PENETRATION
-EVERY 20' OF STRAIGHT RUN OF PIPE
-AT EQUIPMENT CONNECTIONS IF MORE THAN 10' FROM A BRANCH TAKE-OFF
DOMESTIC HOT WATER:
INDICATE DELIVERED WATER TEMPERATURE ON DOMESTIC HOT WATER SUPPLY AND RETURN LINES.
INDICATE FLOW DIRECTION WITH ARROWS ON DOMESTIC HOT WATER SUPPLY AND RETURN LINES.
MEDIUM PRESSURE GAS PIPING:
MEDIUM PRESSURE GAS PIPING (14" WIC TO 5 PI) SHALL BE IDENTIFIED BY THE STATEMENT, "WARNING TO 5 PI NATURAL GAS." THESE LABELS SHALL BE PLACED AT INTERVALS NOT EXCEEDING 30 FEET. ALL REGULATORS IN MEDIUM PRESSURE LINES SHALL HAVE IDENTIFICATION TAGS IN ACCORDANCE WITH APPLICABLE CODES.
16. SLEEVES:
FLOORS: PROVIDE UL FIRE RATED ASSEMBLIES WERE PIPES PENETRATE ABOVE GRADE FLOORS.
WALLS: PROVIDE UL FIRE RATED ASSEMBLIES WERE PIPES PENETRATE FIRE RATED WALLS.
WHERE PIPING PASSES THROUGH NON CEILING OR WALL, CLOSE OFF SPACE BETWEEN PIPE OR DUCT AND CONSTRUCTION WITH NORMAL GYPSUM WALLBOARD, REPAIR PLASTER SMOOTHED AND FINISHED TO MATCH REMAINDER OF WALL.
INSTALL CHROME OR STAINLESS STEEL ESCUTCHEONS WHERE PIPING PASSES THROUGH FINISHED SURFACES.

FSGROUP® ARCHITECTS
13105 Northwest Fwy Suite 1110
Houston Texas 77040
713 344 1752 Office
www.fsdesignbuild.com

PROJECT NAME

THE STATE OF TEXAS FORT BEND COUNTY

INFORMATION TECHNOLGY BUILDING
EUGENE HEIMANN CIRCLE
FORT BEND COUNTY . TEXAS

CONSULTANTS

Infrastructure Associates
INFRASTRUCTURE ASSOCIATES, INC.
6117 RICHMOND AVENUE, SUITE 200
HOUSTON, TEXAS 77057-6267
(713) 622-0120 PH (713) 622-0557 FAX
TBPE FIRM REGISTRATION #F-4506
WWW.IAHOUSTON.COM

PROFESSIONAL SEAL

2024-05-15

ISSUED FOR

ISSUED FOR PROPOSALS AND PERMIT

REVISIONS

No.	DESCRIPTION	DATE

KEY PLAN

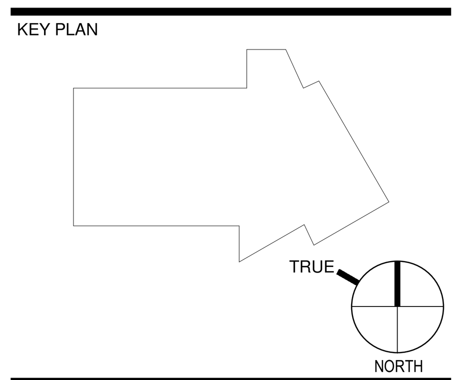

SHEET TITLE

NOTES AND LEGEND

SCALE

DATE
05/15/2024

PROJECT NUMBER
2319

SHEET NUMBER

P101

ELECTRIC WATER HEATER SCHEDULE

MARK	MFR	MODEL	VOLTS	ø	ELEMENT(S) QTY	KW	RECOVERY GPH @ 100°F RISE	TANK CAPACITY GALLONS	LOCATION
EWH-1	A.O. SMITH	DEN-52	480	3	2	6	49	50	MECH. ROOM
EWH-2	A.O. SMITH	DEN-52	480	3	2	6	49	50	MECH. ROOM

NOTES:
1. OUTLET TEMPERATURE SHALL BE 140°F.
2. PROVIDE SIMULTANEOUS ELEMENT OPERATION.

SUMP PUMP SCHEDULE

MARK	MANUFACTURER	MODEL	HP	HEAD	VOLTS	PHASE	AMPS	GPM	LOCAITON
SP-1	BELL AND GOSSETT	2EC0718	3/4	30	208	1	10	50	ELEVATOR PIT

NOTES:
1. REFER TO ELEVATOR PIT SUMP PUMP DETAIL FOR MORE INFORMATION.
2. PROVIDE REMOTE ALARM. REQUIRES SEPARATE 120 VAC CIRCUIT BY DIVISION 26.

HOT WATER CIRCULATING PUMP SCHEDULE

MARK	MFR.	MODEL NO.	TYPE	G.P.M.	HEAD	H.P.	VOLTAGE	MOTOR R.P.M.	LOCATION
HWCP-1	BELL & GOSSETT	NRF-25	IN LINE BRONZE	2	15	1/25	120 / 1Ø	1725	-

NOTES:
1. HOT WATER CIRCULATION PUMP SHALL BE PROVIDED WITH TIMER TO DE-ENERGIZE THE PUMP UNDER DURING UNOCCUPIED PERIODS PER THE CURRENT IECC.

PLUMBING FIXTURE SCHEDULE

MARK	DESCRIPTION	SIZE OF CONNECTION TRAP	SS	SV	CW	HW	REMARKS
WC-1	WATER CLOSET (WALL MOUNTED)	-	4"	2"	1"	-	2856.128 AMERICAN STANDARD WHITE "AFWALL MILLENIUM", WALL MOUNTED ELONGATED BOWL, WITH 1-1/2 INCH INLET SPUD. 6047.121.002 AMERICAN STANDARD, MANUAL PISTON TYPE WATER CLOSET FLUSH VALVE, ADA COMPLIANT. PISTON VALVE REMAINS CLOSED AND DOES NOT NEED TO BE RESET. INTEGRAL WIPER SPRING PREVENTS CLOGGING AND REDUCES MAINTEANCE. DURABLE CHROME-PLATED CAST BRASS CONSTRUCTION. 1" I.P.S. ANGLE STOP WITH BACK-FLOW PREVENTION AND VANDAL-RESISTANT CAP 9500C CHURCH, SEATS SHALL BE EXTRA HEAVY WEIGHT AND INJECTION MOLDED OF SOLID PLASTIC. SEATS SHALL BE OPEN FRONT LESS COVER FOR ELONGATED BOWL AND FEATURE LARGE MOLDED-IN BUMPERS. CONCEALED CHECK HINGES TO FEATURE 300 SERIES STAINLESS STEEL POSTS THAT STOP SEAT 11 DEGREES BEYOND VERTICAL. USES 300 SERIES STAINLESS STEEL HARDWARE. WALL HUNG WATER CLOSET CARRIERS AND FACE PLATE SHALL BE BY JR SMITH.
WC-2	WATER CLOSET (WALL MOUNTED) (A.D.A.)	-	4"	2"	1"	-	2856.128 AMERICAN STANDARD WHITE "AFWALL MILLENIUM", WALL MOUNTED ELONGATED BOWL, WITH 1-1/2 INCH INLET SPUD. 6047.121.002 AMERICAN STANDARD, MANUAL PISTON TYPE WATER CLOSET FLUSH VALVE, ADA COMPLIANT. PISTON VALVE REMAINS CLOSED AND DOES NOT NEED TO BE RESET. INTEGRAL WIPER SPRING PREVENTS CLOGGING AND REDUCES MAINTEANCE. DURABLE CHROME-PLATED CAST BRASS CONSTRUCTION. 1" I.P.S. ANGLE STOP WITH BACK-FLOW PREVENTION AND VANDAL-RESISTANT CAP 9500C CHURCH, SEATS SHALL BE EXTRA HEAVY WEIGHT AND INJECTION MOLDED OF SOLID PLASTIC. SEATS SHALL BE OPEN FRONT LESS COVER FOR ELONGATED BOWL AND FEATURE LARGE MOLDED-IN BUMPERS. WALL HUNG WATER CLOSET CARRIERS AND FACE PLATE SHALL BE BY JR SMITH. WATER CLOSET RIM HEIGHT SHALL BE 17" ABOVE FINISHED FLOOR LEVEL PER A.D.A. REQUIREMENTS.
L-1	LAVATORY (UNDER COUNTER MOUNTED) (A.D.A.)	1 1/4"	2"	2"	1/2"	1/2"	0495.221 AMERICAN STANDARD "OVALYN", UNDER COUNTER LAVATORY, VITREOUS CHINA, SINGLE HOLE CENTER MOUNTING. 420-E2805ABCP, 4" FIXED CENTERS, 4 5/8" CENTER TO CENTER RIGID CAST BRASS SPOUT, E2805AB - 0.5 GPM (1.9 L/MIN) VANDAL PROOF NON-AERATING SPRAY, 420-XAB - VOLUME CONTROL AND HOT WATER LIMIT STOP CARTRIDGE, 1/2" NPSM SUPPLY INLETS FOR 3/8" OR 1/2" FLEXIBLE RISER, CHROME PLATE FINISH, WEIGHT: 4.950LBS HD155WC MCGUIRE, WHEELCHAIR LAVATORY STRAINER. FURNISHED WITH HEAVY CAST BRASS GRID DRAIN STRAINER, ELBOW AND 1 1/4" 17GA SEAMLESS TUBULAR OFFSET TAILPIECE. PVD CHROME FINISH. ADA COMPLIANT. 8 3/4" X 5 1/8" OD. BV02 MCGUIRE'S, 1/2 IPS X 3/8 OD, QUARTER-TURN BRASS BALL VALVE ANGLE STOP, CHROME PLATED, CONVERTIBLE LOOSE KEY HANDLE. SUPPLY STOP VALVE SHALL BE CERTIFIED BY CSA OR OTHER RECOGNIZED TESTING AUTHORITY AND SHALL BEAR MANUFACTURER AND TESTING MARK. STOP TO BE CERTIFIED TO 200 PSI LINE PRESSURE. 8872 MCGUIRE, HEAVY CAST BRASS 1 1/4 X 1 1/4 ADJUSTABLE TRAP WITH CLEANOUT PLUG AND 11INCH CENTER TO END. FURNISHED WITH SLIP NUTS, 17 GAUGE SEAMLESS TUBULAR BRASS WALL BEND, AND STEEL SHALLOW FLANGE. LFUSG-B-SC WATTS THERMOSTATIC MIXING VALVE, MIXING VALVE WITH DOUBLE THROTTLING DESING, TEMPERATURE SHALL BE SET TO 110°.
L-2	LAVATORY (WALL MOUNTED) (A.D.A.)	1 1/4"	2"	2"	1/2"	-	0355.012 AMERICAN STANDARD "LUCERNE", WALL HUNG LAVATORY, BARRIER FREE, VITREOUS CHINA, 3 HOLES 4" CENTER. UTILIZE WALL HANGER INCLUDED. 802-VE2805-317ABCP CHICAGO FAUCET, 4" FIXED CENTERS, E2805 - 0.5 GPM (1.9 L/MIN) VANDAL PROOF NON-AERATING SPRAY, 317-PR - 4" WRISTBLADE HANDLE. BV02 MCGUIRE, 1/2 IPS X 3/8 OD, QUARTER-TURN BRASS BALL VALVE ANGLE STOP. 149 MCGUIRE, FLAT GRID STRAINER WITH 4" TAILPIECE. 8872 MCGUIRE, HEAVY CAST BRASS 1 1/4 X 1 1/4 ADJUSTABLE TRAP WITH CLEANOUT PLUG. 102-EZ-W TRUEBRO, "P" TRAP AND SUPPLY INSULATION KIT. LFUSG-B-SC WATTS THERMOSTATIC MIXING VALVE, MIXING VALVE WITH DOUBLE THROTTLING DESING, TEMPERATURE SHALL BE SET TO 110°.
EDF-1	ELECTRIC DRINKING FOUNTAIN W/ BOTTLE FILL	1 1/2"	2"	2"	1/2"	-	HTHB-HAC8BLSS-WF HAYLSEY TAYLOR, HYDROBOOST WATER COOLER & BOTTLE FILLER. 50F DRINKING WATER, MECHANICALLY ACTIVATED, SANITARY SENSOR ACTIVATED, VISUAL FILTER MONITOR, ANTI-MICROBIAL. DOUBLE BUBBLER AND ELECTRONIC BOTTLE FILLER SENSOR. 55898C REPLACEMENT FILTER. MLP200 IN-WALL CARRIER. 98324C CANE APRON. 36292C POWER BLOCK. BV02 MCGUIRE'S, 1/2 IPS X 3/8 OD, QUARTER-TURN BRASS BALL VALVE ANGLE STOP, CHROME PLATED, CONVERTIBLE LOOSE KEY HANDLE. SUPPLY STOP VALVE SHALL BE CERTIFIED BY CSA OR OTHER RECOGNIZED TESTING AUTHORITY AND SHALL BEAR MANUFACTURER AND TESTING MARK. STOP TO BE CERTIFIED TO 200 PSI LINE PRESSURE. 8872 MCGUIRE'S, HEAVY CAST BRASS 1 1/4 X 1 1/4 ADJUSTABLE TRAP WITH CLEANOUT PLUG AND 11INCH CENTER TO END. FURNISHED WITH SLIP NUTS, 17 GAUGE SEAMLESS TUBULAR BRASS WALL BEND, AND STEEL SHALLOW FLANGE. PROVIDE HALSEY TAYLOR, IN WALL CARRIER MOUNTING SYSTEM.
MS-1	MOP SINK (FLOOR MOUNTED)	3"	3"	2"	3/4"	3/4"	HL-1800 STERN WILLIAMS HILOW, 24"X24"X12" DRAIN SHALL CAST BRASS WITH STAINLESS STEEL STRAINER CAST INTEGRAL AND SHALL PROVIDE FOR CAULKED LEAD CONNECTION NOT LES THAN 1" DEEP TO A 3" PIPE. TERRAZZO RECEPTOR COMPOSED OF PEARL GREY MARBLE CHIPS AND WHITE PORTLAND CEMENT GROUND SMOOTH, GROUTED AND SEALED TO RESIST STAINS. STAINLESS STEEL CAP OF ONE PIECE 20 GA. 302 STAINLESS STEEL CAST INTEGRAL ON FROM DROP. 540-LD897SWXFABCP CHICAGO FAUCETS, 8" FIXED CENTERS, 6GPM, 897-SJKCP - 5 3/4" RIGID VACUUM BREAKER SPOUT WITH 3/4" MALE HOSE THREAD AND PAIL HOOK, 369-PR - 2 3/8" LEVER HANDLE, XT - QUATURN COMPRESSION OPERATING CARTRIDGE, WXF - STRAIGHT 2" INLET SUPPLY ARM WITH WALL FLANGE WITH 1/2" NPT FEMALE THREAD INLET, ATMOSPHERIC VACUUM BREAKER, NOT INTENDED FOR CONTINUOUS PRESSURE APPLICATIONS, CHROME PLATE FINISH. T-35 STERN WILLIAMS, HOSE AND WALL HOOK. HOSE 36" LONG, WITH 3/4" CHROME COUPLINGS. WALL BRACKET OF STAINLESS STEEL. T-40 STERN WILLIAMS, STAINLESS STEEL MOP HANGER OF STAINLESS STEEL WITH #4 FINISH. 24" LONG, WITH 3 RUBBER SPRING LOADED GRIPS. BP STERN WILLIAMS, SPLASH CATCHER PANELS OF 20 GA. TYPE 304 STAINLESS STEEL.
RVB-1	REFRIGERATOR/ ICE MAKER VALVE BOX	-	-	-	1/2"	-	BIM875 – GUY GRAY – REFRIGERATOR/ ICE MAKER VALVE BOX, FURNISHED WITH 1/2" FIP INLET X 1/4" OD OUTLET COMPERSSION ANGLE VALVE. PROVIDE FILTER WHEN MAKING FINAL CONNECTION. (FURNISH AND INSTALL AT ALL REFRIGERATORS AND ICE MACHINES)

PLUMBING FIXTURE SCHEDULE

MARK	DESCRIPTION	SIZE OF CONNECTION TRAP	SS	SV	CW	HW	REMARKS
U-1	URINAL	3"	2"	2"	3/4"	-	DECORUM 0.125 GPF HIGH EFFICIENCY URINAL. SLEEK, MODERN, COMPACT VITREOUS CHINA DESIGN, DEEP SUMP REDUCES SPLASHING, WASHOUT URINAL WORKS AT 0.125 GPF (0.47 LPF), PERMANENT EVERCLEAN SURFACE INHIBITS THE GROWTH OF STAIN AND ODOR–CAUSING BACTERIA, MOLD, AND MILDEW ON THE SURFACE, 3'4" INLET SPUD, OUTLET CONNECTION THREADED 2" INSIDE (NPTF), WALL HANGERS INCLUDED, FIXTURE ONLY, STRAINER INCLUDED, ADA COMPLIANT, MEETS ANSI FLUSH REQUIREMENTS AT 0.125 GPF, MEETS CALIFORNIA WATER SAVINGS REGULATIONS. 186–0.125 SLOAN "ROYAL", FOR FLUSHING VOLUME 0.125: DUAL LINEAR FILTERED BYPASS DIAPHRAGM, ADA COMPLIANT METAL OSCILLATING NON–HOLD–OPEN HANDLE WITH TRIPLE SEAL HANDLE PACKING, ¾" I.P.S. SCREWDRIVER BAK–CHEK® ANGLE STOP W/ FREE SPINNING VANDAL RESISTANT STOP CAP, ADJUSTABLE TAILPIECE, HIGH BACK PRESSURE VACUUM BREAKER FLUSH CONNECTION W/ ONE–PIECE BOTTOM HEX COUPLING NUT, SPUD COUPLING AND FLANGE FOR 3/4" TOP SPUD, SWEAT SOLDER ADAPTER W/COVER TUBE & CAST WALL FLANGE W/SET SCREW, HIGH COPPER, LOW ZINC BRASS CASTINGS FOR DEZINCIFICATION RESISTANCE, NON–HOLD–OPEN HANDLE, FIXED METERING BYPASS AND NO EXTERNAL VOLUME ADJUSTMENT TO ENSURE WATER CONSERVATION, FLUSH ACCURACY CONTROLLED BY CID TECHNOLOGY, DIAPHRAGM, HANDLE PACKING, STOP SEAT AND VACUUM BREAKER MOLDED FROM PERMEX SYNTHETIC RUBBER COMPOUND FOR CHLORAMINE RESISTANCE. 0611 SERES J.R. SMITH, CONCEALED CHAIR CARRIER WITH BEARING PLATE OR APPROVED EQUAL. URINAL RIM HEIGHT SHALL BE 24" ABOVE FINISHED FLOOR LEVEL.
U-2	URINAL A.D.A.	3"	2"	2"	3/4"	-	DECORUM 0.125 GPF HIGH EFFICIENCY URINAL. SLEEK, MODERN, COMPACT VITREOUS CHINA DESIGN, DEEP SUMP REDUCES SPLASHING, WASHOUT URINAL WORKS AT 0.125 GPF (0.47 LPF), PERMANENT EVERCLEAN SURFACE INHIBITS THE GROWTH OF STAIN AND ODOR–CAUSING BACTERIA, MOLD, AND MILDEW ON THE SURFACE, 3'4" INLET SPUD, OUTLET CONNECTION THREADED 2" INSIDE (NPTF), WALL HANGERS INCLUDED, FIXTURE ONLY, STRAINER INCLUDED, ADA COMPLIANT, MEETS ANSI FLUSH REQUIREMENTS AT 0.125 GPF, MEETS CALIFORNIA WATER SAVINGS REGULATIONS. 186–0.125 SLOAN "ROYAL", FOR FLUSHING VOLUME 0.125: DUAL LINEAR FILTERED BYPASS DIAPHRAGM, ADA COMPLIANT METAL OSCILLATING NON–HOLD–OPEN HANDLE WITH TRIPLE SEAL HANDLE PACKING, ¾" I.P.S. SCREWDRIVER BAK–CHEK® ANGLE STOP W/ FREE SPINNING VANDAL RESISTANT STOP CAP, ADJUSTABLE TAILPIECE, HIGH BACK PRESSURE VACUUM BREAKER FLUSH CONNECTION W/ ONE–PIECE BOTTOM HEX COUPLING NUT, SPUD COUPLING AND FLANGE FOR 3/4" TOP SPUD, SWEAT SOLDER ADAPTER W/COVER TUBE & CAST WALL FLANGE W/SET SCREW, HIGH COPPER, LOW ZINC BRASS CASTINGS FOR DEZINCIFICATION RESISTANCE, NON–HOLD–OPEN HANDLE, FIXED METERING BYPASS AND NO EXTERNAL VOLUME ADJUSTMENT TO ENSURE WATER CONSERVATION, FLUSH ACCURACY CONTROLLED BY CID TECHNOLOGY, DIAPHRAGM, HANDLE PACKING, STOP SEAT AND VACUUM BREAKER MOLDED FROM PERMEX SYNTHETIC RUBBER COMPOUND FOR CHLORAMINE RESISTANCE. 0611 SERES J.R. SMITH, CONCEALED CHAIR CARRIER WITH BEARING PLATE OR APPROVED EQUAL. URINAL RIM HEIGHT SHALL BE 17" ABOVE FINISHED FLOOR LEVEL.
SK-1	SINGLE BOWL SINK (A.D.A)	1 1/2"	3"	2"	1/2"	1/2"	LRAD1716 ELKAY, SINGLE BOWL (16"L X 17"W X 6"D INSIDE BOWL), #18 GAUGE TYPE 304 NICKEL BEARING STAINLESS STEEL, SELF RIMMING, 2 HOLE 4" CENTER. 895-317GN2BE4ABCP CHICAGO FAUCETS, 4" FIXED CENTERS, GN2BAB - 5-1/4" RIGID / SWING GOOSENECK SPOUT, E4AB - 2.0 GPM (7.6 L/MIN) SPRAY, 317-PR - 4" WRISTBLADE HANDLE, XTAB - QUATURN COMPRESSION OPERATING CARTRIDGE, 1/2" NPSM SUPPLY INLETS AND COUPLING NUT FOR 3/8" OR 1/2" FLEXIBLE RISER, CHROME PLATE FINISH, WEIGHT: 5.000LBS, PACKAGE DIMENSIONS: 11.50"L X 6.00"W X 5.00"H, ECAST® CONSTRUCTION WITH EQUAL TO OR LESS THAN 0.25% LEAD CONTENT BY WEIGHTED AVERAGE, THIS ITEM SHIPS 10 BUSINESS DAYS FROM ORDER ACKNOWLEDGEMENT. 151 MCGUIRE, HEAVY DUTY FORGED BRASS BASKET STRAINER WITH A POLISHED AND CHROME PLATED BRASS STRAINER BODY, 1-1/2" X 4" SEAMLESS BRASS TAILPIECE, CAST BRASS LOCK AND COUPLING NUTS. 1151WC MCGUIRE, 1 1/2" ADA COMPLIANT OFFSET STAINER/DRAIN ASSEMBLY AND TAILPIECE, C8912 MCGUIRE, 1 1/2" CAST BODY P-TRAP AND CLEANOUT. INSULATE P-TRAP, TAILPIECE ASSEMBLY. BV02 MCGUIRE, 1/2 IPS X 3/8 OD, QUARTER-TURN BRASS BALL VALVE ANGLE STOP, CHROME PLATED, CONVERTIBLE LOOSE KEY HANDLE. SUPPLY STOP VALVE SHALL BE CERTIFIED BY CSA OR OTHER RECOGNIZED TESTING AUTHORITY AND SHALL BEAR MANUFACTURER AND TESTING MARK. STOP TO BE CERTIFIED TO 200 PSI LINE PRESSURE. 270–RF–STSTL–REC LEONARD, POINT OF USE THERMOSTATIC VALVE MIXING VALVE, BRONZE BODY, LOCKED TEMPERATURE ADJUSTMENT CAP (VANDAL RESISTANT), COPPER ENCAPSULATED THERMOSTAT ASSEMBLY WITH POLYMER THERMOPLASTIC SHUTTLE, STAINLESS STEEL SPRINGS, BUNA–N O'RINGS, INTEGRAL CHECK VALVES ON HOT AND COLD INLETS. SET TEMPERATURE TO 105°F
SK-2	RECTANGULAR HANDWASH BASIN	1 1/2"	3"	2"	1/2"	1/2"	43003L01 "AVENTO" SINK WASH BASIN RECTANGULAR HAND WASH BASIN 360 x 220 x 110MM, WHITE ALPIN, WITHOUT OVERFLOW. TVW103004006I "VILLEROY & BOCH ARCHITECTURA" SINGLE-LEVER BASINMIXER WITH DRAW BAR OUTLET FITTING, CHROME. 1 x TAP FITTING, 1 x AERATOR KEY, 1 x OUTLET FITTING, 1 x FASTENING, 2 x CONNECTING HOSES, 1 x INSTALLATION INSTRUCTIONS. A87600VJ "VILLEROY & BOCH AVENTO" VANITY UNIT, 1 DOOR, 340 x 514 x 234 MM. NORDIC OAK, WALL MOUNTED, BOTTLE-TRAP REQUIRED WHEN COMBINING A HAND RINSE WASHBASIN WITH A VANITY UNIT.
FD-1	FLOOR DRAIN	3"-4"	3"-4"	2"	-	-	2005-B-NB. J.R. SMITH, DUCO CAST IRON BODY WITH FLASHING COLLAR AND ADJUSTABLE STRAINER HEAD 6" DIAMETER TYPE "A" NICKEL BRONZE STRAINER. INSTALL COMPLETE WITH PROSET TRAP GUARD, EXCEPT FOR SHOWER DRAIN.
FS-1	FLOOR SINK	4"	4"	2"	1/2"	-	3100C J.R. SMITH, 1/2 TOP GRATE, ACID RESISTANT INDIRECT WASTE FLOOR SINK, DUCO CAST IRON BODY, LOOSE GRATE WITH SEDIMENT BUCKET 8.5"SQ. – 6" DEEP AND TRAP PRIMER CONNECTION. FURNISH AND INSTALL WITH DEEP SEAL P–TRAP ASSEMBLY.
FCO-1	FLOOR CLEANOUT	-	-	-	-	-	4040 J.R. SMITH, WITH SCREWED PLUG AND FLASHING RING AND COVER PLATE WITH SECURING SCREW. COVER PLATE SHALL BE FLUSH TO FINISH FLOOR, AND SUITABLE FOR FLOOR COVERING INSTALLED.
SH-1	SHOWER STALL (A.D.A.)	1 1/2"	2"	2"	1/2"	1/2"	SHOWER STALL SHALL BE SPECIFIED BY ARCHITECT AND CONTRACTOR INSTALLED. PROVIDE 3"FD–1. 96–500–B30–L–V SYMMONS, VALVE SHALL BE 1.5 GPM. TEMPTROL PRESSURE–BALANCING MIXING VALVE WITH LEVER HANDLE, ADJUSTABLE STOP SCREW TO LIMIT HANDLE TURN. LEVERTROL DIVERTER WITH INTEGRAL VOLUME CONTROL. CLEAR–FLO SHOWER HEAD WITH ARM AND FLANGE, WALL/HAND SHOWER WITH IN–LINE VACUUM BREAKER, FLEXIBLE 5' METAL HOSE, WALL CONNECTION AND FLANGE, 30" SLIDE BAR FOR HAND SHOWER MOUNTING. PROVIDE WITH 60" HOSE. NOTE: COORDINATE WITH ARCHITECTURAL DRAWINGS FOR SHOWER STALL FINISH, TRAY, CURTAIN, ROD, SEAT, GRAB BARS, SOAP DISH AND ADDITIONAL ACCESSORIES. PROVIDE ANTI–SCALDING THERMOSTATIC MIXING VALVE. MIXING VALVE SHALL COMPLY WITH ASSE 1070.
WH-1	WALL HYDRANT (FREEZE POOF)	-	-	-	3/4"	-	5519 J.R. SMITH, BRONZE QUARTER TURN NON-FREEZE AUTOMATIC DRAINING HYDRANT WITH STAINLESS STEEL FACE, HOSE CONNECTION, INTEGRAL VACUUM BREAKER AND DUAL CHECK VALVE, "T" HANDLE KEY, WHEEL HANDLE AND STAINLESS STEEL BOX WITH FULL 180° COVER OPENING.

FSGROUP® ARCHITECTS
13105 Northwest Fwy Suite 1110
Houston Texas 77040
713 344 1752 Office
www.fsdesignbuild.com

PROJECT NAME

INFORMATION TECHNOLGY BUILDING
EUGENE HEIMANN CIRCLE
FORT BEND COUNTY . TEXAS

CONSULTANTS

Infrastructure Associates
INFRASTRUCTURE ASSOCIATES, INC.
6117 RICHMOND AVENUE, SUITE 200
HOUSTON, TEXAS 77057-6267
(713) 622-0120 PH (713) 622-0557 FAX
TBPE FIRM REGISTRATION #F-4306
WWW.IAHOUSTON.COM

PROFESSIONAL SEAL

STATE OF TEXAS
ANWAR HASSAN
64671
LICENSED
PROFESSIONAL ENGINEER
2024-05-15

ISSUED FOR

ISSUED FOR PROPOSALS AND PERMIT

REVISIONS

No.	DESCRIPTION	DATE

KEY PLAN

TRUE NORTH

SHEET TITLE

FIXTURE SCHEDULE

SCALE

DATE 05/15/2024

PROJECT NUMBER 2319

SHEET NUMBER

P102

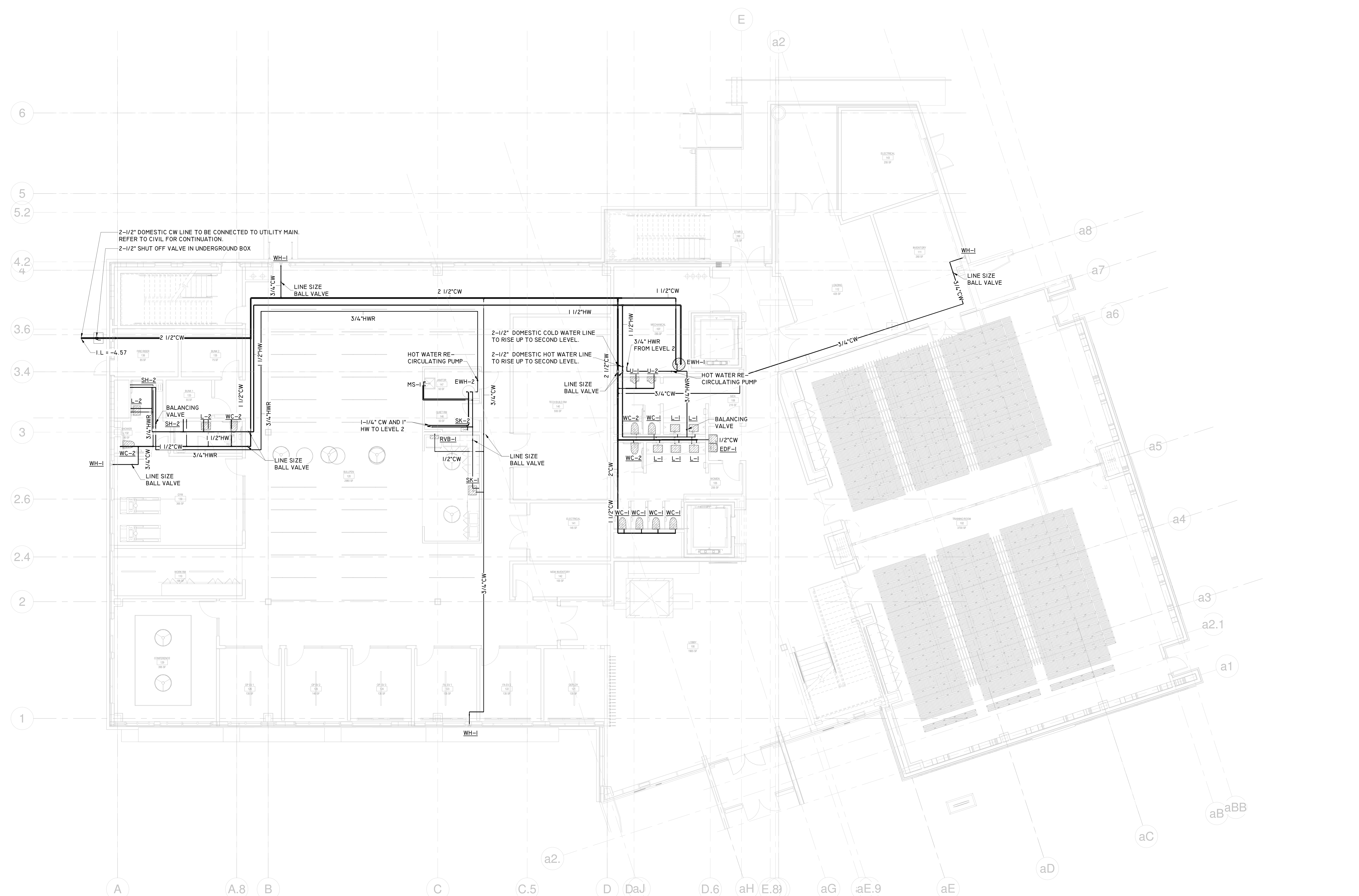

1 P201 LEVEL 1 - FLOOR PLAN - DOMESTIC
SCALE : 1/8" = 1'-0"

FSGROUP®
ARCHITECTS
13105 Northwest Fwy Suite 1110
Houston Texas 77040
713 344 1752 Office
www.fsdesignbuild.com

PROJECT NAME

INFORMATION TECHNOLGY BUILDING
EUGENE HEIMANN CIRCLE
FORT BEND COUNTY . TEXAS

CONSULTANTS

Infrastructure Associates
INFRASTRUCTURE ASSOCIATES, INC.
6117 RICHMOND AVENUE, SUITE 200
HOUSTON, TEXAS 77057-6267
(713) 622-0120 PH (713) 622-0557 FAX
TBPE FIRM REGISTRATION #F-4306
WWW.IAHOUSTON.COM

PROFESSIONAL SEAL

STATE OF TEXAS
ANWAR HASSAN
64671
LICENSED
PROFESSIONAL ENGINEER
2024-05-15

ISSUED FOR
ISSUED FOR PROPOSALS AND PERMIT

REVISIONS

No.	DESCRIPTION	DATE

KEY PLAN

TRUE NORTH

SHEET TITLE
FLOOR PLAN LEVEL 1 - DOMESTIC

SCALE 1/8" = 1'-0"
DATE 05/15/2024
PROJECT NUMBER 2319
SHEET NUMBER
P201

1
P202
LEVEL 2 - FLOOR PLAN - DOMESTIC
SCALE : 1/8" = 1'-0"

FSGROUP ARCHITECTS
13105 Northwest Fwy Suite 1110
Houston Texas 77040
713 344 1752 Office
www.fsdesignbuild.com

PROJECT NAME

THE STATE OF TEXAS FORT BEND COUNTY

INFORMATION TECHNOLGY BUILDING
EUGENE HEIMANN CIRCLE
FORT BEND COUNTY , TEXAS

CONSULTANTS

Infrastructure Associates
INFRASTRUCTURE ASSOCIATES, INC.
6117 RICHMOND AVENUE, SUITE 200
HOUSTON, TEXAS 77057-6267
(713) 622-0120 PH (713) 622-0557 FAX
TBPE FIRM REGISTRATION #F-4506
WWW.IAHOUSTON.COM

PROFESSIONAL SEAL

STATE OF TEXAS
ANWAR HASSAN
64671
LICENSED
PROFESSIONAL ENGINEER
2024-05-15

ISSUED FOR
ISSUED FOR PROPOSALS AND PERMIT

REVISIONS

No.	DESCRIPTION	DATE

KEY PLAN

TRUE
NORTH

SHEET TITLE
FLOOR PLAN LEVEL 2 - DOMESTIC

SCALE
1/8" = 1'-0"

DATE
05/15/2024

PROJECT NUMBER
2319

SHEET NUMBER
P202

FSGROUP®
ARCHITECTS
13105 Northwest Fwy Suite 1110
Houston Texas 77040
713 344 1752 Office
www.fsdesignbuild.com

PROJECT NAME

THE STATE OF TEXAS
FORT BEND COUNTY

INFORMATION TECHNOLGY BUILDING
EUGENE HEIMANN CIRCLE
FORT BEND COUNTY . TEXAS

CONSULTANTS

Infrastructure Associates
INFRASTRUCTURE ASSOCIATES, INC.
6117 RICHMOND AVENUE, SUITE 200
HOUSTON, TEXAS 77057-6267
(713) 622-0120 PH (713) 622-0557 FAX
TBPE FIRM REGISTRATION #F-4506
WWW.IAHOUSTON.COM

PROFESSIONAL SEAL

STATE OF TEXAS
ANWAR HASSAN
64671
LICENSED
PROFESSIONAL ENGINEER
2024-05-15

ISSUED FOR
ISSUED FOR PROPOSALS AND PERMIT

REVISIONS

No.	DESCRIPTION	DATE

KEY PLAN

TRUE NORTH

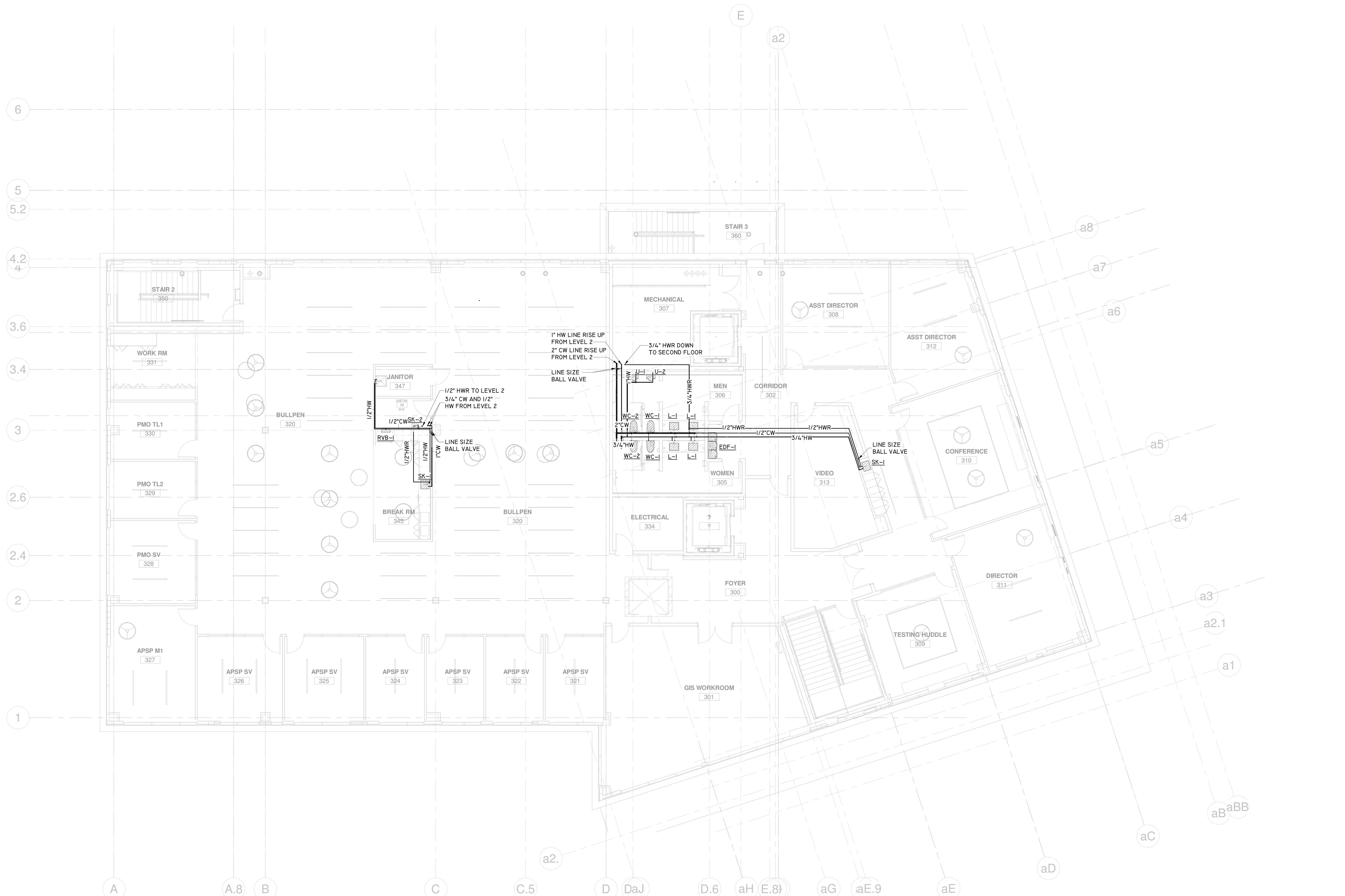

1
P203
LEVEL 3 - FLOOR PLAN - DOMESTIC
SCALE : 1/8" = 1'-0"

SHEET TITLE
FLOOR PLAN LEVEL 3 - DOMESTIC

SCALE
1/8" = 1'-0"

DATE
05/15/2024

PROJECT NUMBER
2319

SHEET NUMBER
P203

E D C B A

4

3

2

1

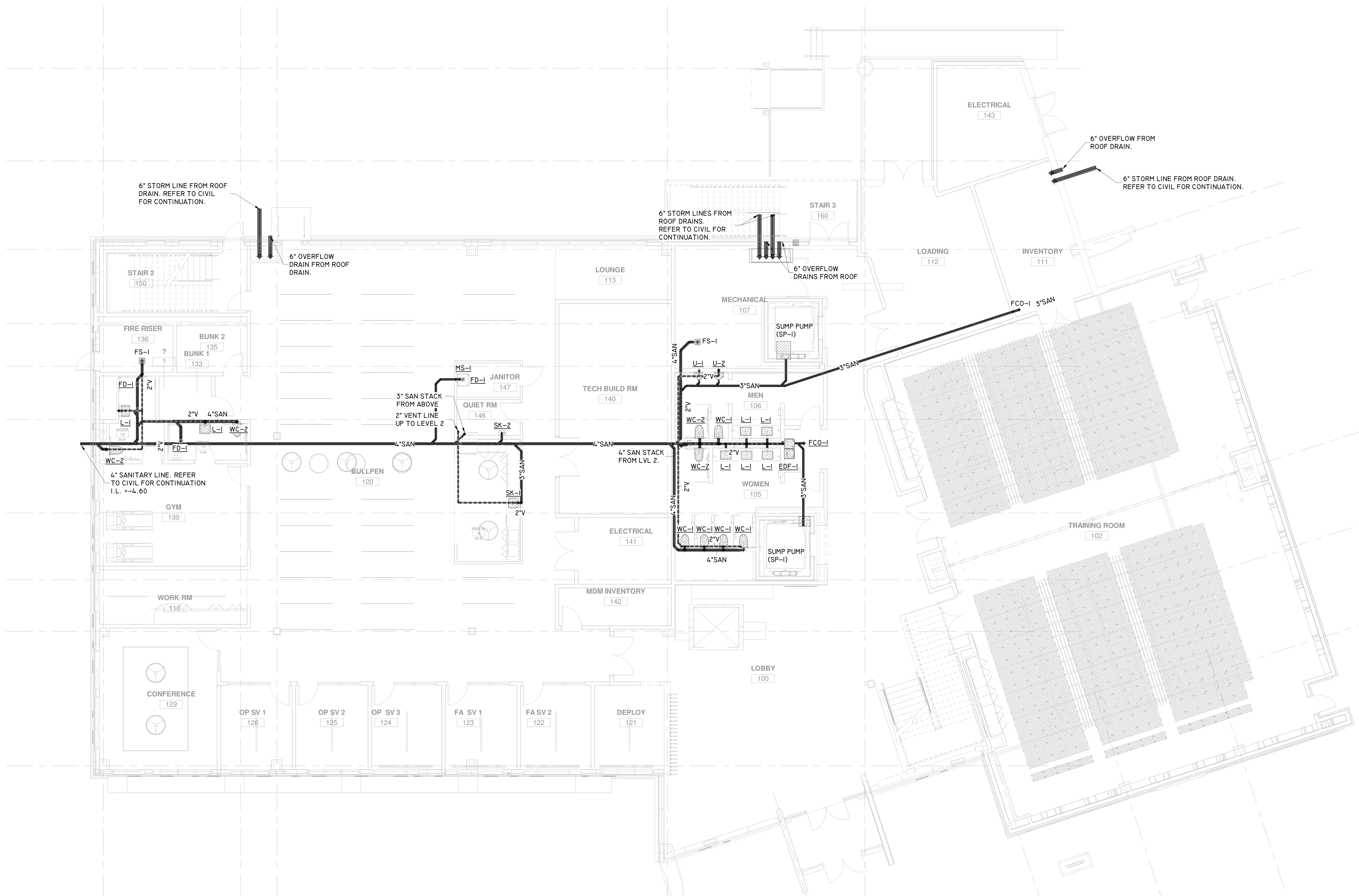

1
P301

LEVEL 1 - FLOOR PLAN - SANITARY

SCALE : 1/8" = 1'-0"

E D C B A

FSGROUP® ARCHITECTS
13105 Northwest Fwy Suite 1110
Houston Texas 77040
713 344 1752 Office
www.fsdesignbuild.com

PROJECT NAME

THE STATE OF TEXAS · FORT BEND COUNTY

INFORMATION TECHNOLGY BUILDING
EUGENE HEIMANN CIRCLE
FORT BEND COUNTY . TEXAS

CONSULTANTS

Infrastructure Associates
INFRASTRUCTURE ASSOCIATES, INC.
6117 RICHMOND AVENUE, SUITE 200
HOUSTON, TEXAS 77057-6267
(713) 622-0120 PH (713) 622-0557 FAX
TBPE FIRM REGISTRATION #F-4506
WWW.IAHOUSTON.COM

PROFESSIONAL SEAL

STATE OF TEXAS
ANWAR HASSAN
64671
LICENSED
PROFESSIONAL ENGINEER
2024-05-15

ISSUED FOR

ISSUED FOR PROPOSALS AND PERMIT

REVISIONS

No.	DESCRIPTION	DATE

KEY PLAN

TRUE NORTH

SHEET TITLE

FLOOR PLAN LEVEL 1 - SANITARY

SCALE
1/8" = 1'-0"

DATE
05/15/2024

PROJECT NUMBER
2319

SHEET NUMBER

P301

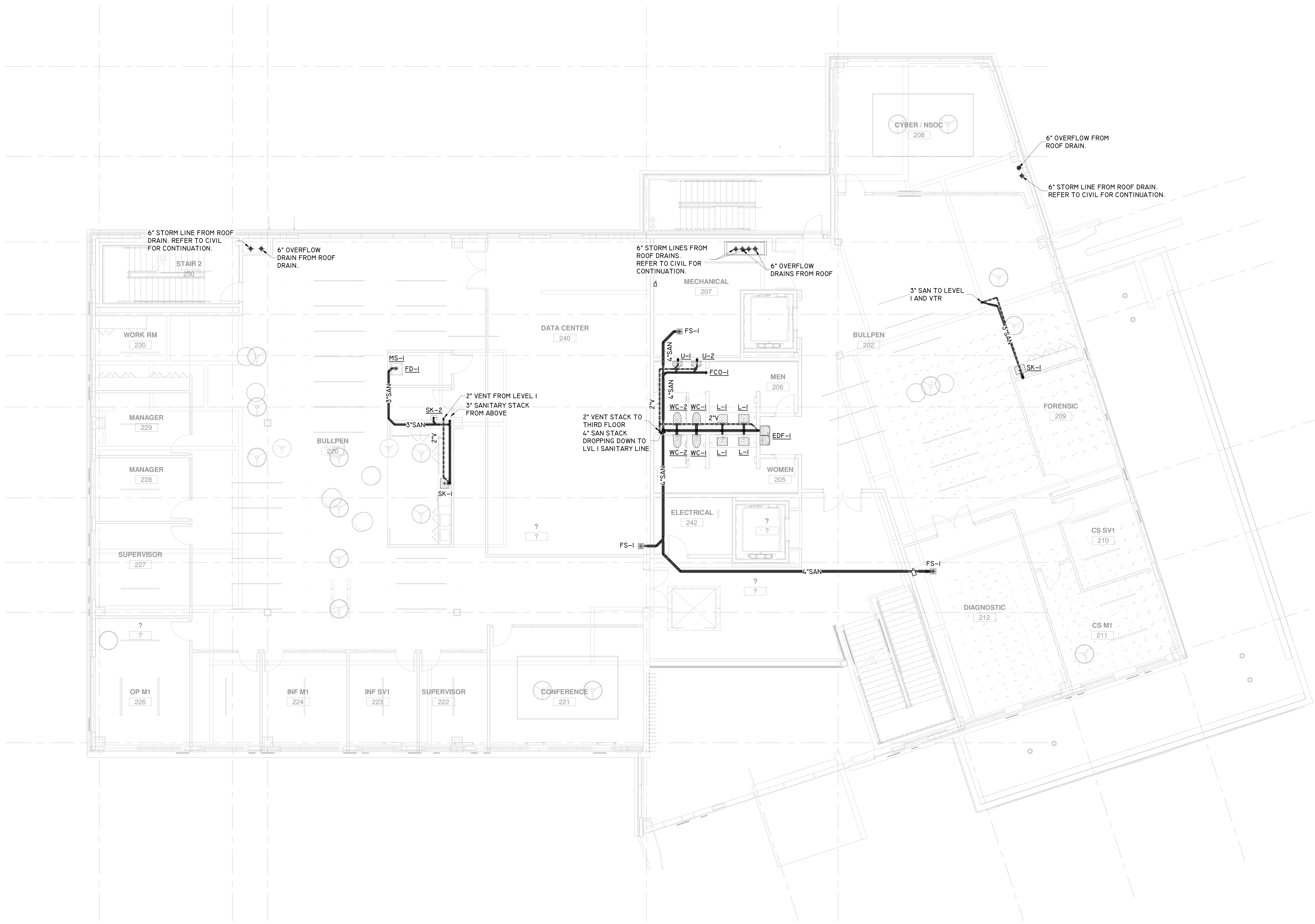

1
P302

LEVEL 2 - FLOOR PLAN - SANITARY

SCALE : 1/8" = 1'-0"

FSGROUP®
ARCHITECTS
13105 Northwest Fwy Suite 1110
Houston Texas 77040
713 344 1752 Office
www.fsdesignbuild.com

PROJECT NAME

INFORMATION TECHNOLGY BUILDING
EUGENE HEIMANN CIRCLE
FORT BEND COUNTY . TEXAS

CONSULTANTS

Infrastructure Associates
INFRASTRUCTURE ASSOCIATES, INC.
6117 RICHMOND AVENUE, SUITE 200
HOUSTON, TEXAS 77057-6267
(713) 622-0120 PH (713) 622-0557 FAX
TBPE FIRM REGISTRATION #F-4506
WWW.IAHOUSTON.COM

PROFESSIONAL SEAL

STATE OF TEXAS
ANWAR HASSAN
64671
LICENSED
PROFESSIONAL ENGINEER
2024-05-15

ISSUED FOR

ISSUED FOR PROPOSALS AND PERMIT

REVISIONS

No.	DESCRIPTION	DATE

KEY PLAN

TRUE NORTH

SHEET TITLE

FLOOR PLAN LEVEL 2 - SANITARY

SCALE
1/8" = 1'-0"

DATE
05/15/2024

PROJECT NUMBER
2319

SHEET NUMBER

P302

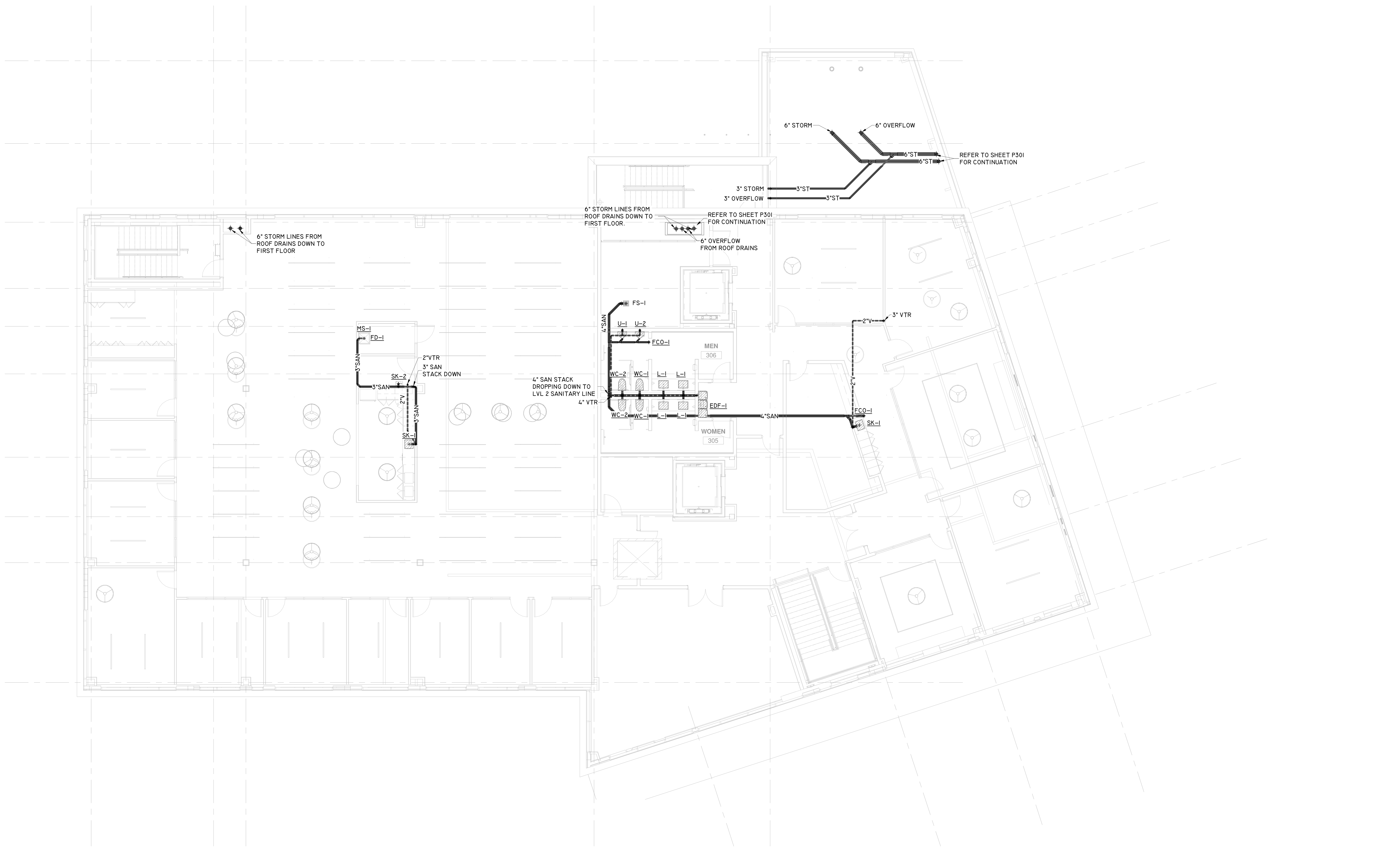

1
P303

LEVEL 3 - FLOOR PLAN - SANITARY

SCALE : 1/8" = 1'-0"

FSGROUP®
ARCHITECTS
13105 Northwest Fwy Suite 1110
Houston Texas 77040
713 344 1752 Office
www.fsdesignbuild.com

PROJECT NAME

THE STATE OF TEXAS
FORT BEND COUNTY

INFORMATION TECHNOLGY BUILDING
EUGENE HEIMANN CIRCLE
FORT BEND COUNTY . TEXAS

CONSULTANTS

Infrastructure Associates
INFRASTRUCTURE ASSOCIATES, INC.
6117 RICHMOND AVENUE, SUITE 200
HOUSTON, TEXAS 77057-6267
(713) 622-0120 PH (713) 622-0557 FAX
TBPE FIRM REGISTRATION #F-4506
WWW.IAHOUSTON.COM

PROFESSIONAL SEAL

STATE OF TEXAS
ANWAR HASSAN
64671
LICENSED
PROFESSIONAL ENGINEER
2024-05-15

ISSUED FOR
ISSUED FOR PROPOSALS AND PERMIT

REVISIONS

No.	DESCRIPTION	DATE

KEY PLAN

TRUE
NORTH

SHEET TITLE
FLOOR PLAN LEVEL 3 - SANITARY

SCALE
1/8" = 1'-0"

DATE
05/15/2024

PROJECT NUMBER
2319

SHEET NUMBER
P303

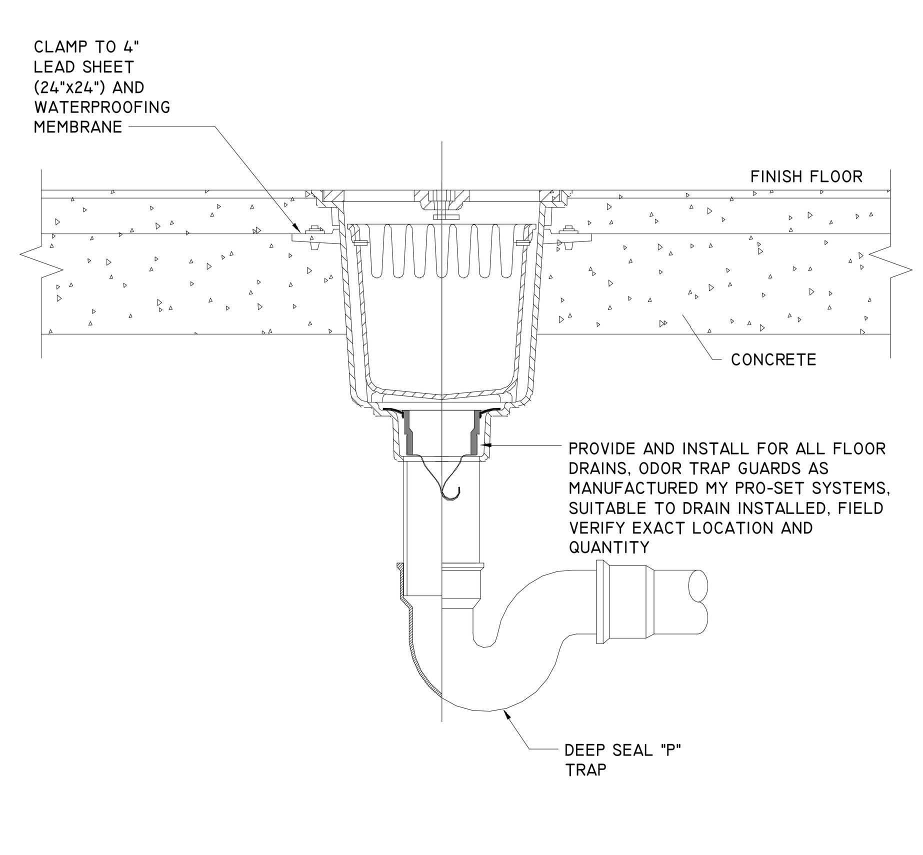

FLOOR SINK WITH TRAP GUARD (FS-1) | NOT TO SCALE | 11

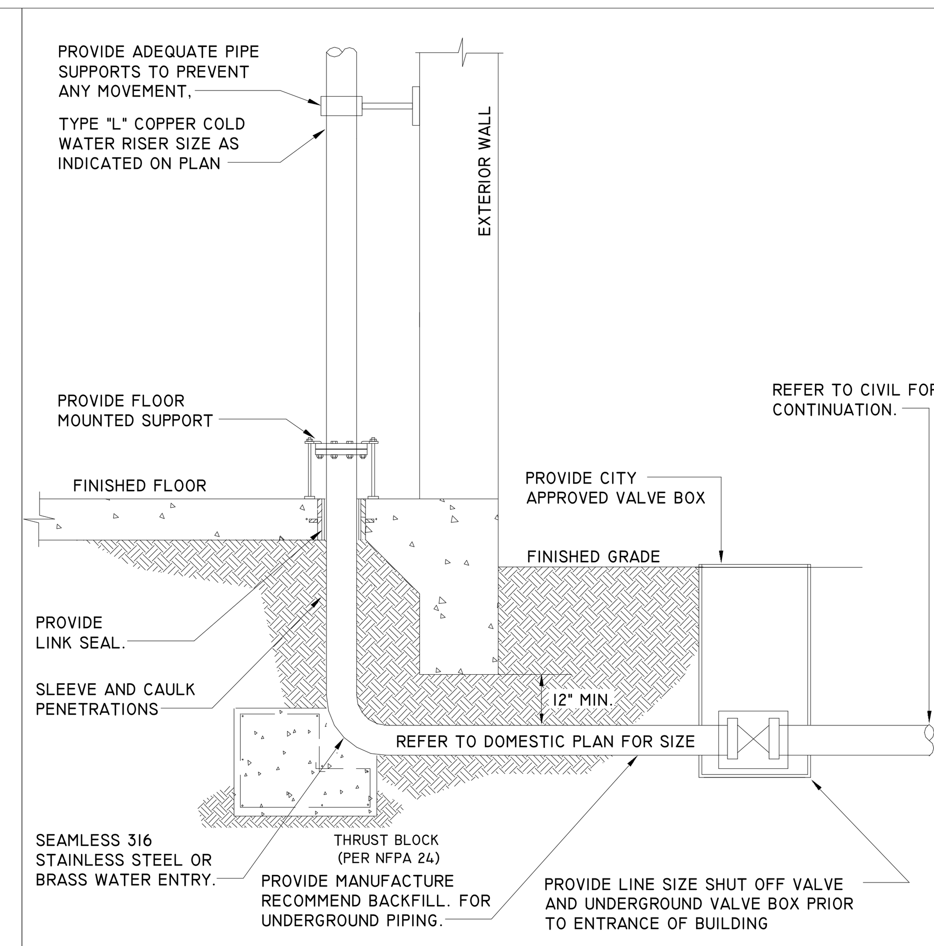

DOMESTIC WATER ENTRY DETAIL | NOT TO SCALE | 8

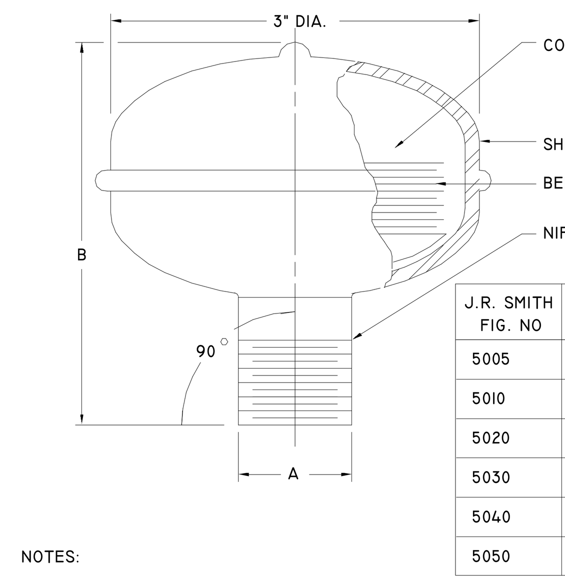

J.R. SMITH FIG. NO	P.D.I. SYMB.	FIXTURE UNIT RATING	A SIZE	B
5005		1 - 11	3/4"	4"
5010		12 - 32	1"	5"
5020		33 - 60	1"	6"
5030		61 - 113	1"	7"
5040		114 - 154	1"	8"
5050		155 - 330	1"	9"

NOTES:
1. ALWAYS INSTALL IN UPRIGHT POSITION
2. INSTALL AT AN ACCESSIBLE LOCATION. PROVIDE ACCESS PANEL WHERE REQUIRED.
3. COMPLY WITH THE LATEST UNIFORM PLUMBING CODE

WATER HAMMER ARRESTERS | NOT TO SCALE | 5

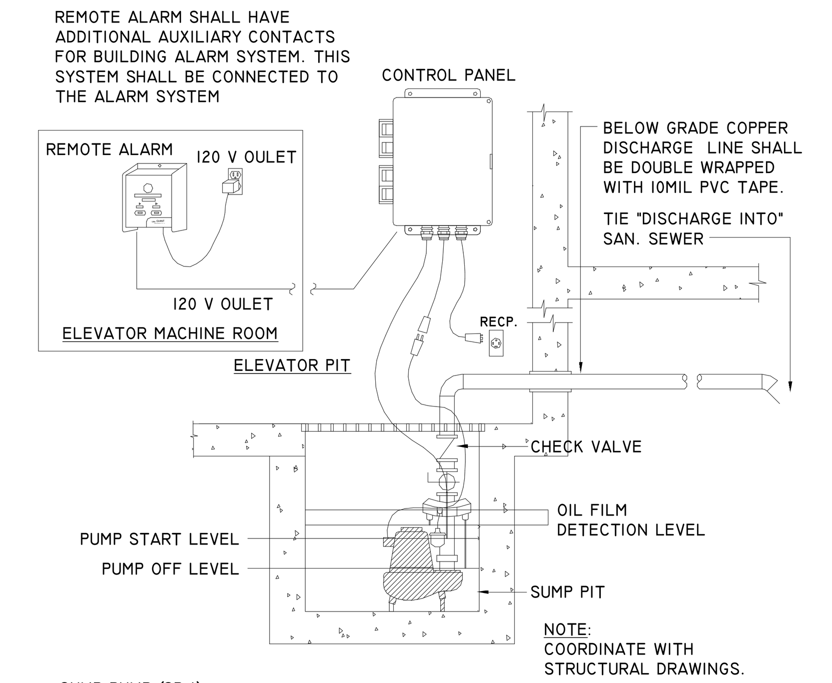

NOTE:
COORDINATE WITH STRUCTURAL DRAWINGS.

SUMP PUMP (SP-1):

BELL & GOSSETT PUMP KIT #ELKT2EC0712

BELL & GOSSETT SERIES "2EC" MODEL "2EC0718", EFFLUENT SUMP PUMP 50 GPM AT 30 HD, 3/4 HP, 208 VOLT, AND 1 PH WITH NEMA L14-20P CORD.

CONTROL PANEL, ALARM PANEL, AND FLOAT SWITCH/ SENSORS SHALL BE BELL & GOSSETT MODEL AISEE1, 230/120V 60 HZ 3/4 HP MAX. CONTROL PANEL SHALL HAVE MULTIPLE INDICATOR LIGHTS; POWER, PUMP RUN, HIGH-WATER; HIGH OIL, PUMP OVERLOAD, FLOAT SWITCH/ SENSORS SHLL BE SINGLE-PIECE SENSOR FOR EASY INSTALLATION, SYSTEM SHALL BE ASME - A17.1 COMPLIANT, SYSTEM SHALL ALSO INCLUDES REMOTE ALARM, ALARM PANEL SHALL BE CONNECTED TO OIL SENSING SUMP SYSTEM'S REMOTE PANEL WHICH CONTAINS AUDIO/VISUAL ALARMING, BOTH THE MAIN PANEL AND REMOTE ALARM PANEL SHALL HAVE AUXILIARY CONTACTS FOR CONNECTION TO A BUILDINGS AUTOMATION SYSTEM OR SCADA SYSTEM.

NOTES:
1. ALARM PANEL SHALL BE DIRECT WIRED.
2. LABEL SUMP PUMP DEDICATED RECEPTACLE "FOR SUMP PUMP ONLY".
3. LABEL ALARM PANEL RECEPTACLE "FOR ALARM PANEL ONLY".
4. NO PVC ALLOWED FOR PUMP DISCHARGE PIPING.
5. PROVIDE AND INSTALL A LOCAL VISUAL / AUDIBLE ALARM JUST OUTSIDE THE ELEVATOR IN ADDITION TO THE ALARM PANEL IN THE ELEV. WALL. COORDINATE WITH ARCHITECT FOR LOCATION.

ELEVATOR PIT SUMP PUMP DETAIL (SP-1) | NOT TO SCALE | 2

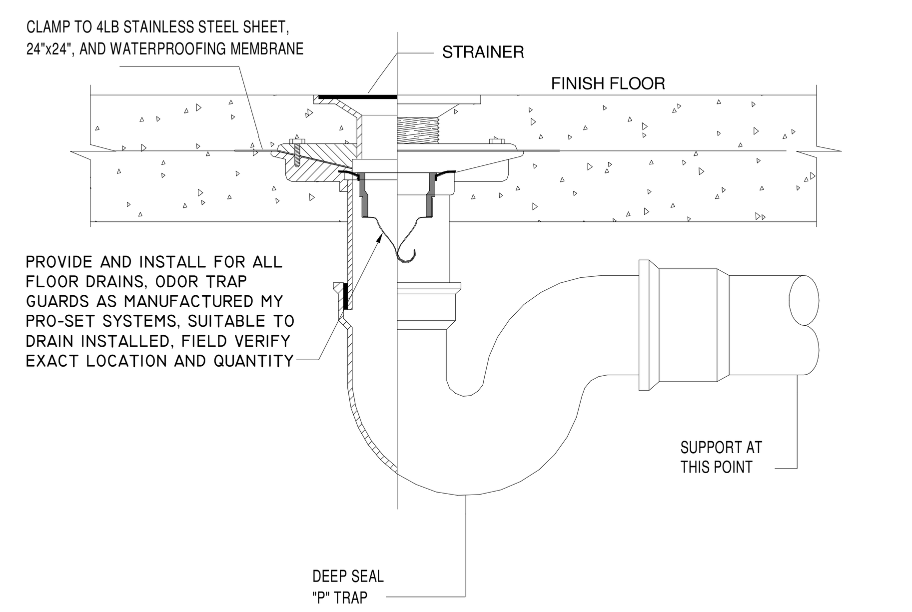

FLOOR DRAIN DETAIL WITH TRAP GUARD | NOT TO SCALE | 10

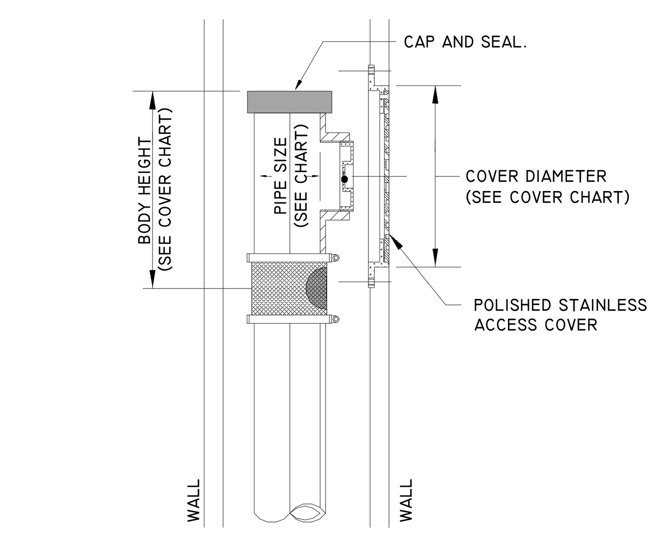

MIFAB WALL CLEAN OUT

MODEL NUMBER	PIPE SIZE (NO HUB)	BODY HEIGHT	STAINLESS STEEL ACCESS COVER	MIN. WALL CAVITY SIZE
C1462-R6-3	2"	6.5"	6"	4 1/2"
C1463-R6-3	3"	8.125"	6"	6 1/2
C1466-R6-3	4"	9.75"	6"	8"
C1466-R9-3	6"	14"	9"	11 1/2"
C1468-R9-3	8"	17"	9"	15"

WALL CLEANOUT DETAIL | NOT TO SCALE | 7

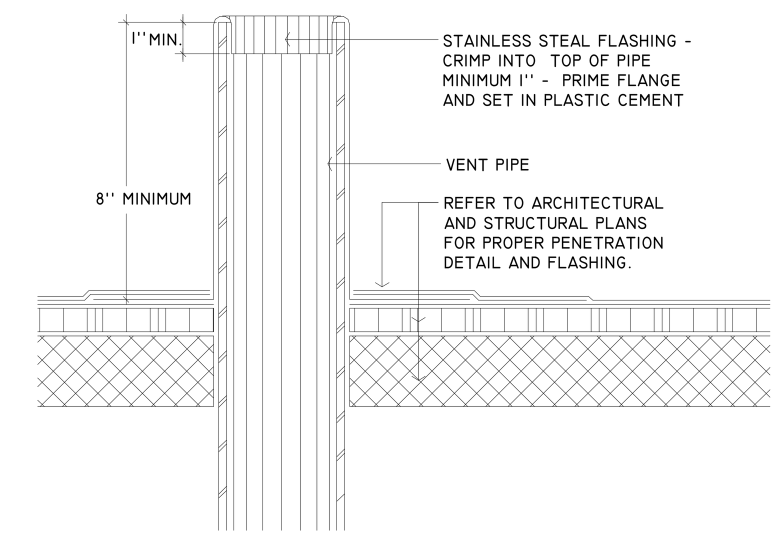

VENT THROUGH ROOF DETAIL | NOT TO SCALE | 4

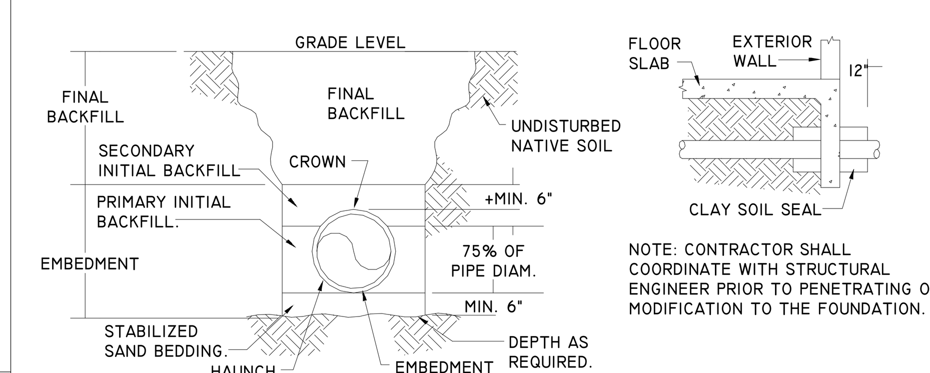

NOTE: CONTRACTOR SHALL COORDINATE WITH STRUCTURAL ENGINEER PRIOR TO PENETRATING OR MODIFICATION TO THE FOUNDATION.

UNDERGROUND INSTALLATION OF PLASTIC PIPE

PLASTIC PIPE SHOULD ALWAYS BE BURIED IN STRICT ACCORDANCE WITH THE ASTM STANDARD RELEVANT TO THE TYPE OF PLASTIC PIPING SYSTEM BEING INSTALLED. THOSE STANDARDS ARE:

ASTM D2321 — STANDARD PRACTICE FOR UNDERGROUND INSTALLATION OF THERMOPLASTIC PIPE FOR SEWERS AND OTHER GRAVITY-FLOW APPLICATIONS.

ASTM D2774 — STANDARD PRACTICE FOR UNDERGROUND INSTALLATION OF THERMOPLASTIC PRESSURE PIPING.

NOTE: IN ADDITION TO THESE STANDARDS, PIPE SHOULD ALWAYS BE INSTALLED IN ACCORDANCE WITH ALL LOCAL CODE REQUIREMENTS.

RECOMMENDATIONS FOR UNDERGROUND INSTALLATION OF PLASTIC DRAINAGE PIPE:

1. THE MINIMUM WIDTH OF THE TRENCH SHOULD BE THE PIPE OD (OUTSIDE DIAMETER) PLUS 16 INCHES THIS WILL ALLOW ADEQUATE ROOM FOR JOINING THE PIPE, SNAKING THE PIPE IN THE TRENCH TO ALLOW FOR EXPANSION AND CONTRACTION WHERE APPROPRIATE AND SPACE FOR BACKFILLING AND COMPACTION OF BACKFILL. THE SPACE BETWEEN THE PIPE AND TRENCH WALL MUST BE WIDER THAN THE COMPACTION EQUIPMENT USED TO COMPACT THE BACKFILL.
2. PROVIDE A MINIMUM OF 4 INCHES OF FIRM, STABLE AND UNIFORM BEDDING MATERIAL IN THE TRENCH BOTTOM. IF ROCK OR UNYIELDING MATERIAL IS ENCOUNTERED, A MINIMUM OF 6 INCHES OF BEDDING SHALL BE USED. BLOCKING SHOULD NOT BE USED TO CHANGE PIPE GRADE OR TO INTERMITTENTLY SUPPORT PIPE OVER LOW SECTIONS IN THE TRENCH.
3. THE PIPE SHOULD BE SURROUNDED WITH AN AGGREGATE MATERIAL WHICH CAN BE EASILY WORKED AROUND THE SIDES OF THE PIPE. BACKFILLING SHOULD BE PERFORMED IN LAYERS OF 6 INCHES WITH EACH LAYER BEING SUFFICIENTLY COMPACTED TO 85% TO 95% COMPACTION.
4. A MECHANICAL TAMPER IS RECOMMENDED FOR COMPACTING SAND AND GRAVEL. THESE MATERIALS CONTAIN FINE-GRAINS, SUCH AS SILT AND CLAY. IF A TAMPER IS NOT AVAILABLE, COMPACTING SHOULD BE DONE BY HAND.
5. THE TRENCH SHOULD BE COMPLETELY FILLED. THE BACKFILL SHOULD BE PLACED AND SPREAD IN UNIFORM LAYERS TO PREVENT ANY UNFILLED SPACES OR VOIDS. LARGE ROCKS, STONES, FROZEN CLODS, OR OTHER LARGE DEBRIS SHOULD BE REMOVED. STONE BACKFILL SHALL PASS THROUGH AN 1-1/2" SIEVE. ROCK SIZE SHOULD BE ABOUT ONE-TENTH OF THE PIPE OUTSIDE DIAMETER. HEAVY TAMPERS OR ROLLING EQUIPMENT SHOULD ONLY BE USED TO CONSOLIDATE THE FINAL BACKFILL.
6. TO PREVENT DAMAGE TO THE PIPE AND DISTURBANCE TO PIPE EMBEDMENT, A MINIMUM DEPTH OF BACKFILL ABOVE THE PIPE SHOULD BE MAINTAINED. PIPE SHOULD ALWAYS BE INSTALLED BELOW THE FROST LEVEL. TYPICALLY, IT IS NOT ADVISABLE TO ALLOW VEHICULAR TRAFFIC OR HEAVY CONSTRUCTION EQUIPMENT TO TRAVERSE THE PIPE TRENCH.

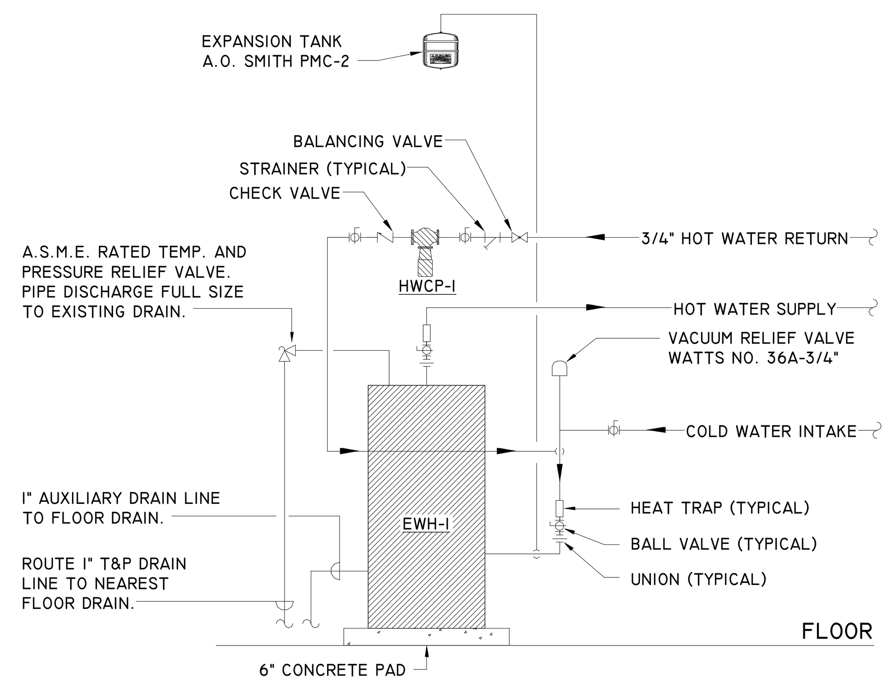

ELECTRIC WATER HEATER DETAIL | NOT TO SCALE | 9

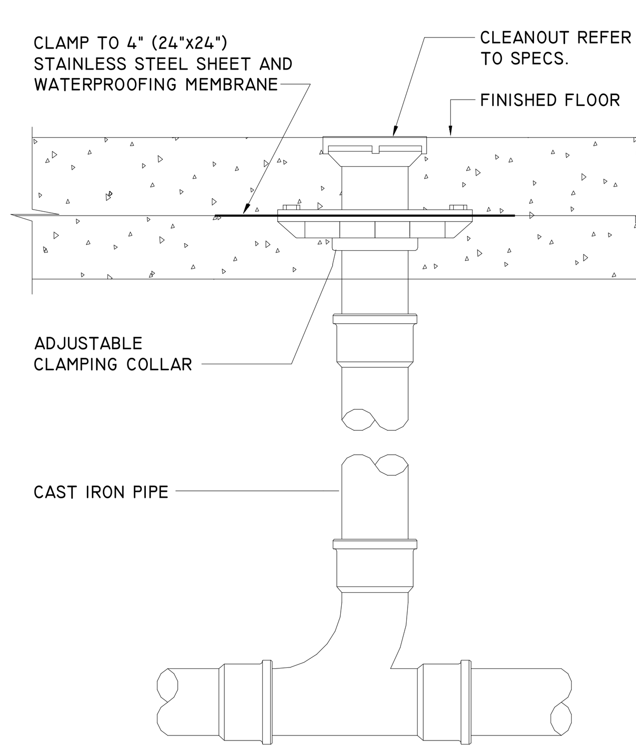

FLOOR CLEANOUT DETAIL (FCO-1) | NOT TO SCALE | 6

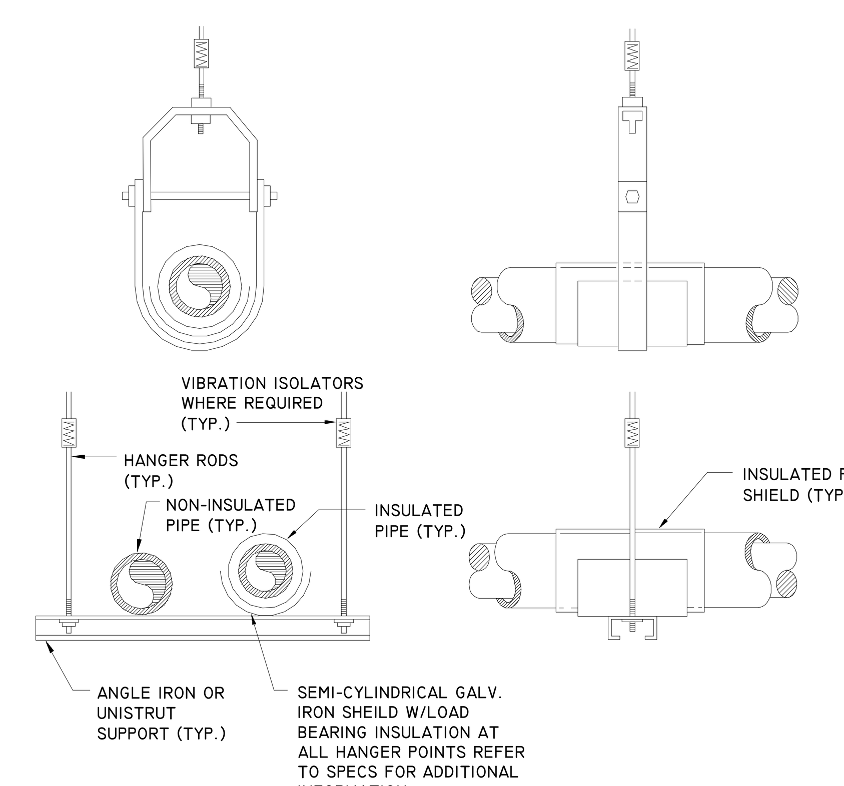

PIPE HANGER DETAIL | NOT TO SCALE | 3

BACKFILL PIPING DETAIL | NOT TO SCALE | 1

FSGROUP ARCHITECTS
13105 Northwest Fwy Suite 1110
Houston Texas 77040
713 344 1752 Office
www.fsdesignbuild.com

PROJECT NAME

THE STATE OF TEXAS — FORT BEND COUNTY

INFORMATION TECHNOLGY BUILDING
EUGENE HEIMANN CIRCLE
FORT BEND COUNTY , TEXAS

CONSULTANTS

Infrastructure Associates
INFRASTRUCTURE ASSOCIATES, INC.
607 RICHMOND AVENUE, SUITE 200
HOUSTON, TEXAS 77057-6267
(713) 622-0120 PH (713) 622-0557 FAX
TBPE FIRM REGISTRATION #F-4506
WWW.IAHOUSTON.COM

PROFESSIONAL SEAL

STATE OF TEXAS — ANWAR HASSAN — 64671 — LICENSED — PROFESSIONAL ENGINEER
2024-05-15

ISSUED FOR
ISSUED FOR PROPOSALS AND PERMIT

REVISIONS

No.	DESCRIPTION	DATE

KEY PLAN

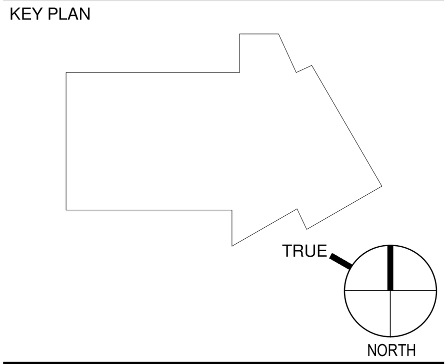

SHEET TITLE
DETAILS

SCALE

DATE
05/15/2024

PROJECT NUMBER
2319

SHEET NUMBER
P401

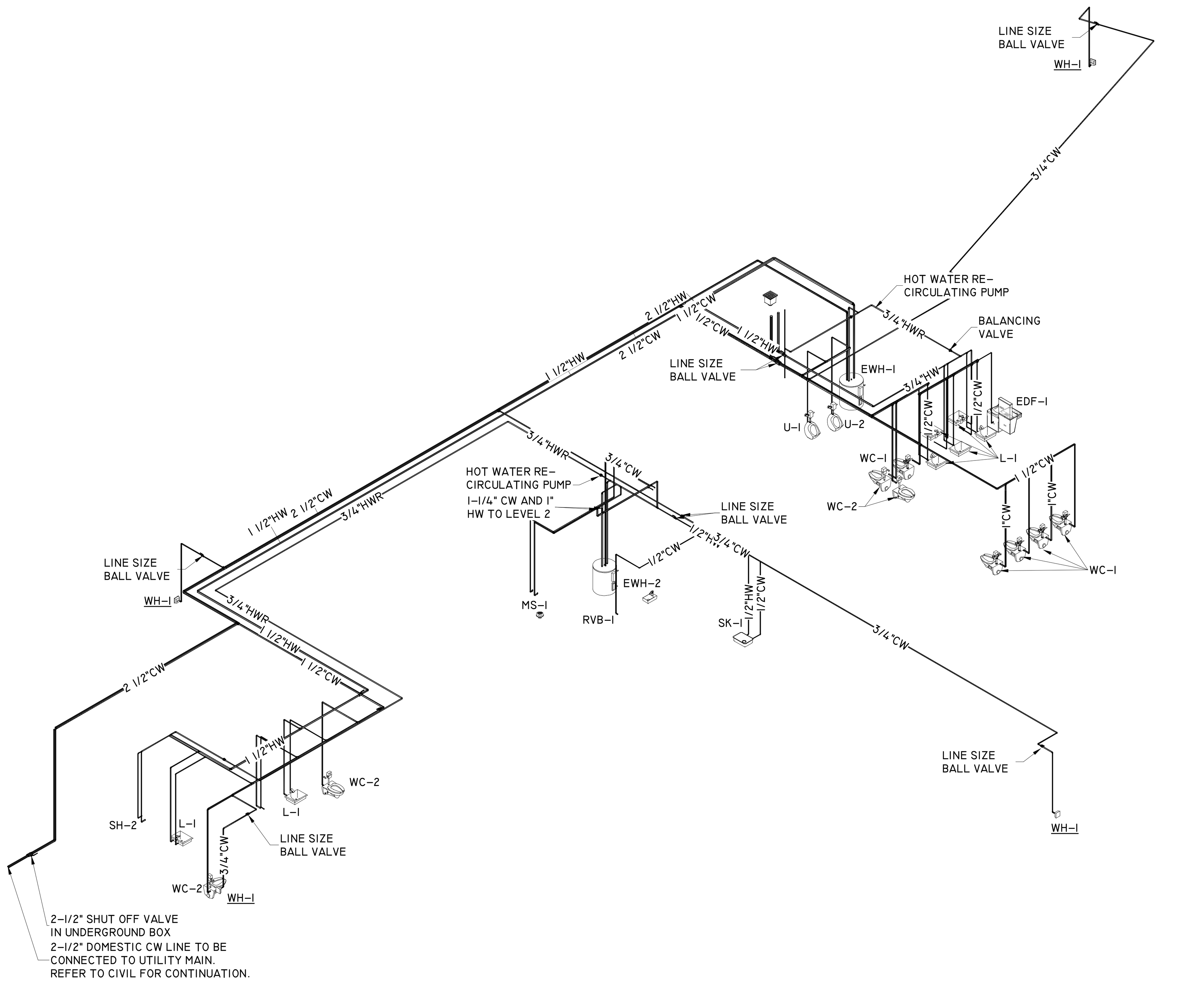

1
P402
RISER DIAGRAM DOMESTIC - LEVEL 1
SCALE :

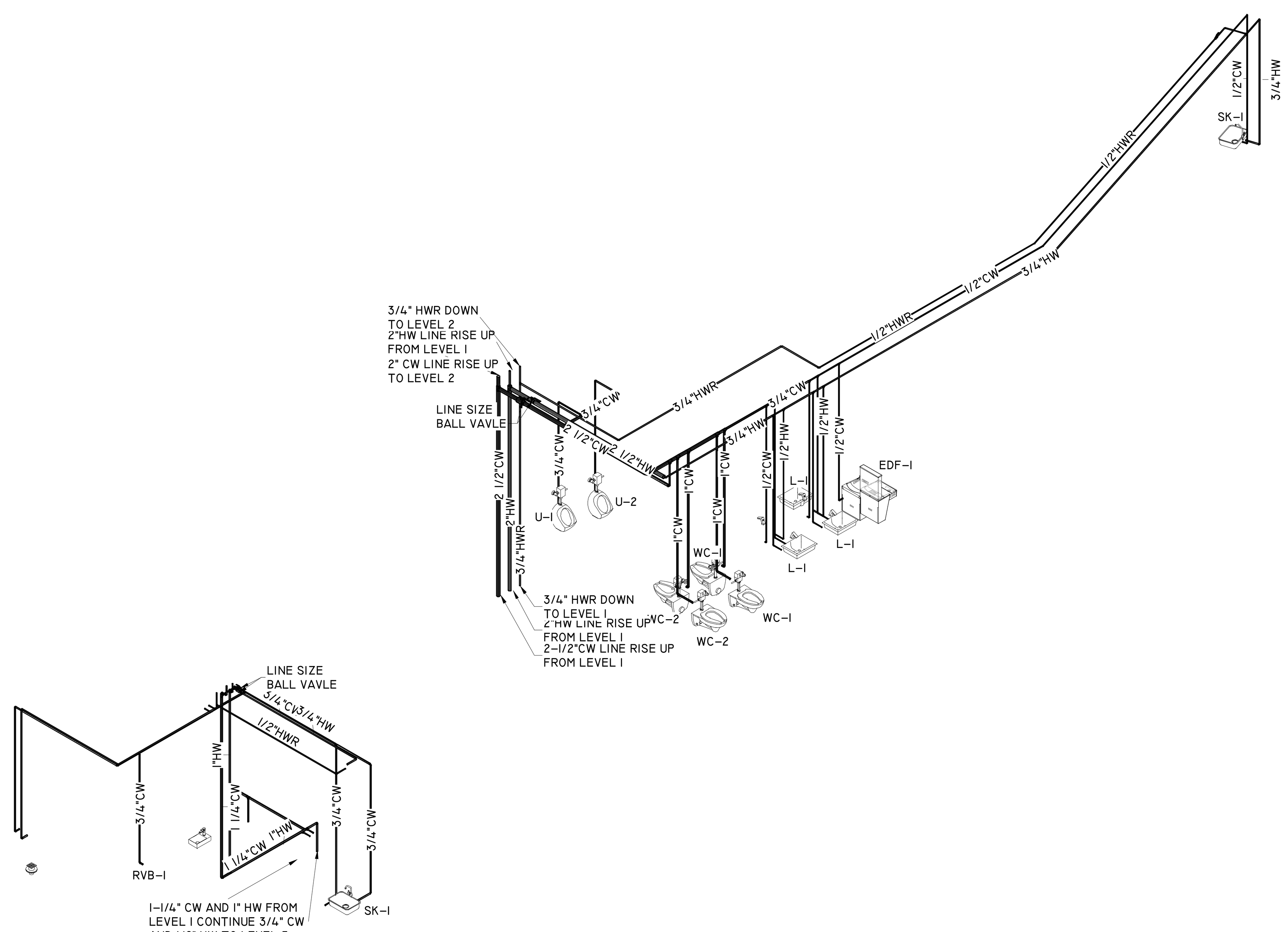

2
P402
RISER DIAGRAM DOMESTIC - LEVEL 2
SCALE :

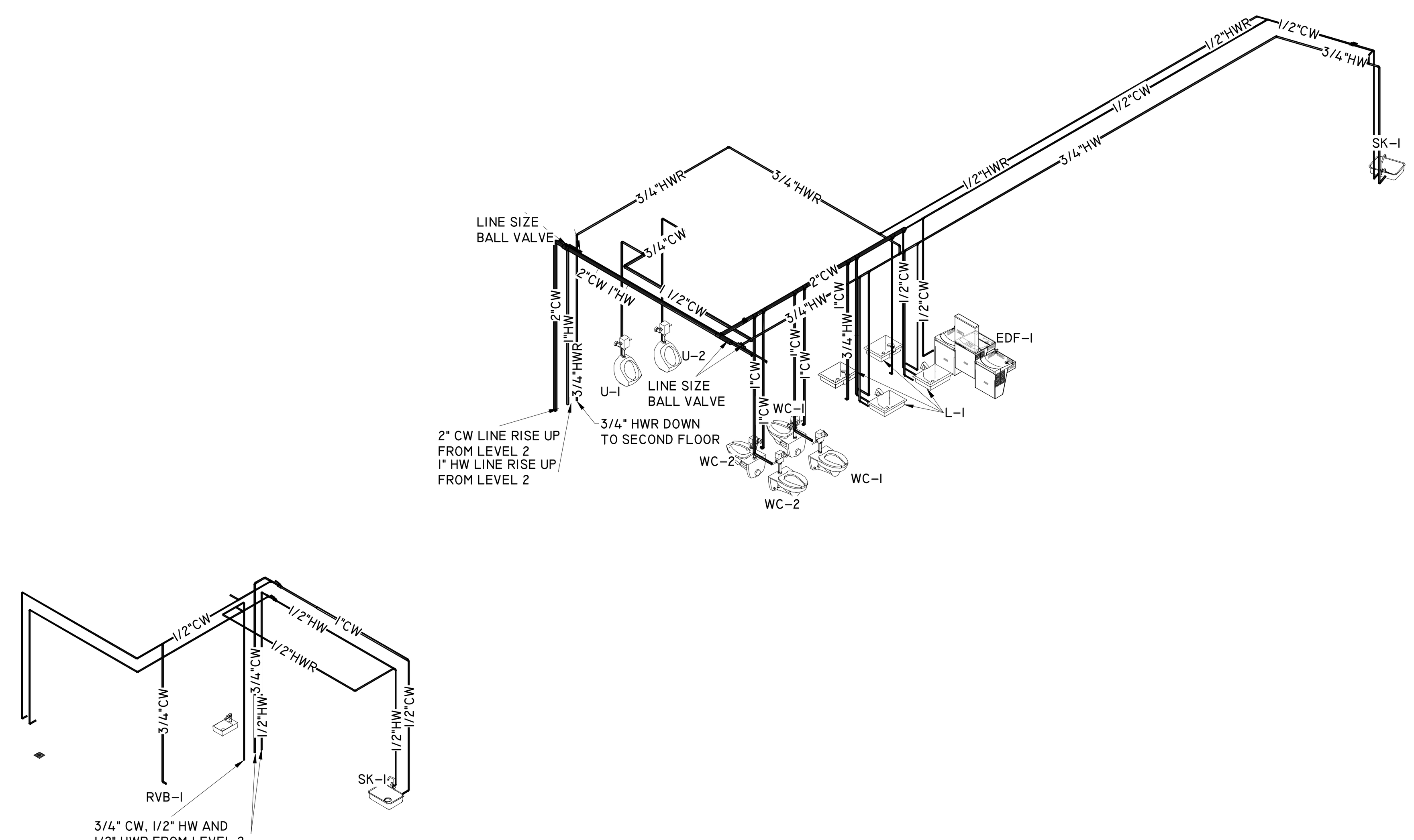

3
P402
RISER DIAGRAM DOMESTIC - LEVEL 3
SCALE :

FSGROUP® ARCHITECTS

13105 Northwest Fwy Suite 1110
Houston Texas 77040
713 344 1752 Office
www.fsdesignbuild.com

PROJECT NAME

THE STATE OF TEXAS · FORT BEND COUNTY

INFORMATION TECHNOLGY BUILDING
EUGENE HEIMANN CIRCLE
FORT BEND COUNTY . TEXAS

CONSULTANTS

Infrastructure Associates

INFRASTRUCTURE ASSOCIATES, INC.
6117 RICHMOND AVENUE, SUITE 200
HOUSTON, TEXAS 77057-6267
(713) 622-0120 PH (713) 622-0557 FAX
TBPE FIRM REGISTRATION #F-4306
WWW.IAHOUSTON.COM

PROFESSIONAL SEAL

STATE OF TEXAS
MATTHEW A FLUKINGER
119970
LICENSED
PROFESSIONAL ENGINEER
2024-05-15

ISSUED FOR

ISSUED FOR PROPOSALS AND PERMIT

REVISIONS

No.	DESCRIPTION	DATE

KEY PLAN

TRUE
NORTH

SHEET TITLE

RISER DIAGRAM - DOMESTIC

SCALE

DATE
05/15/2024

PROJECT NUMBER
2319

SHEET NUMBER

P402

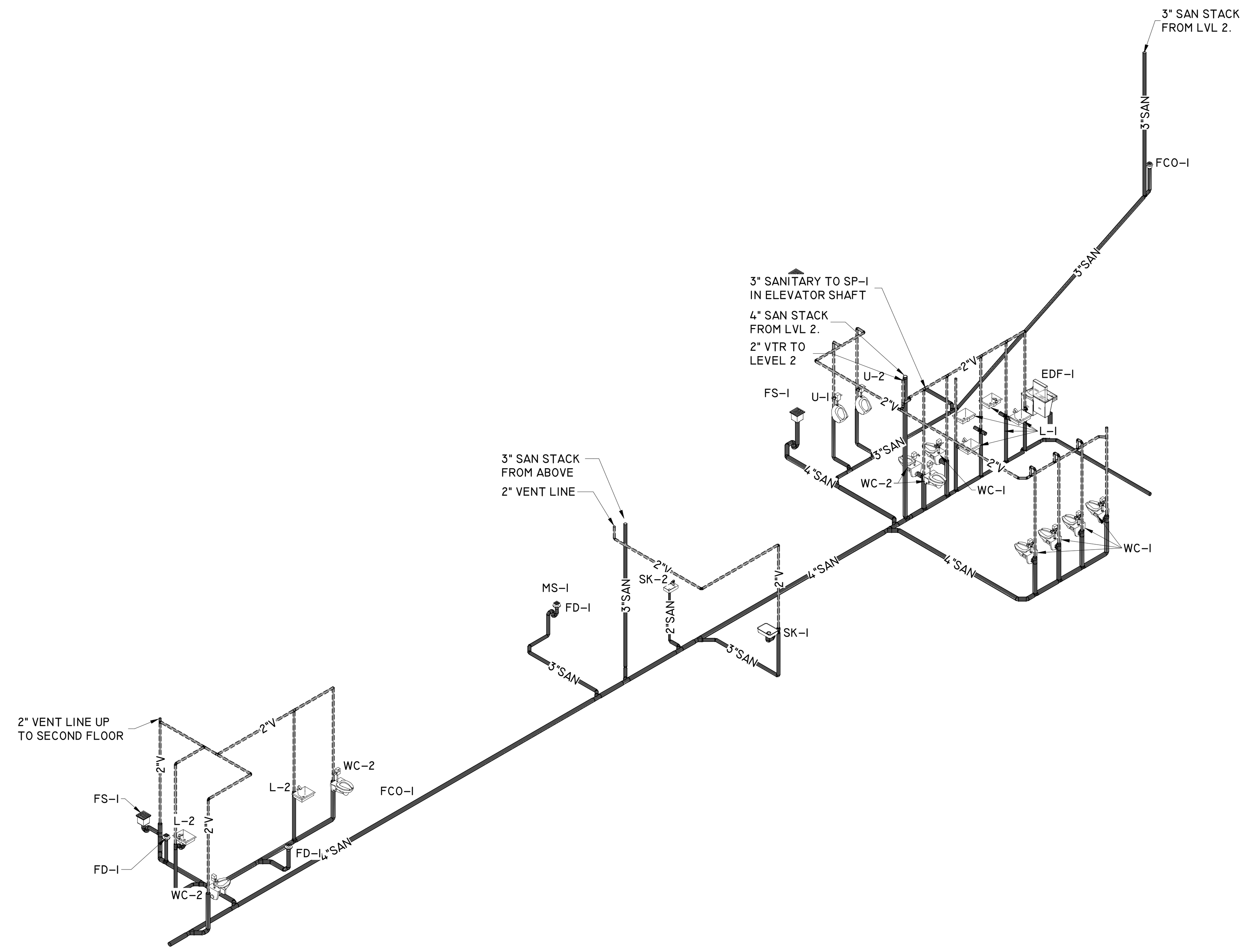

1
P403
RISER DIAGRAM SANITARY - LEVEL 1
SCALE :

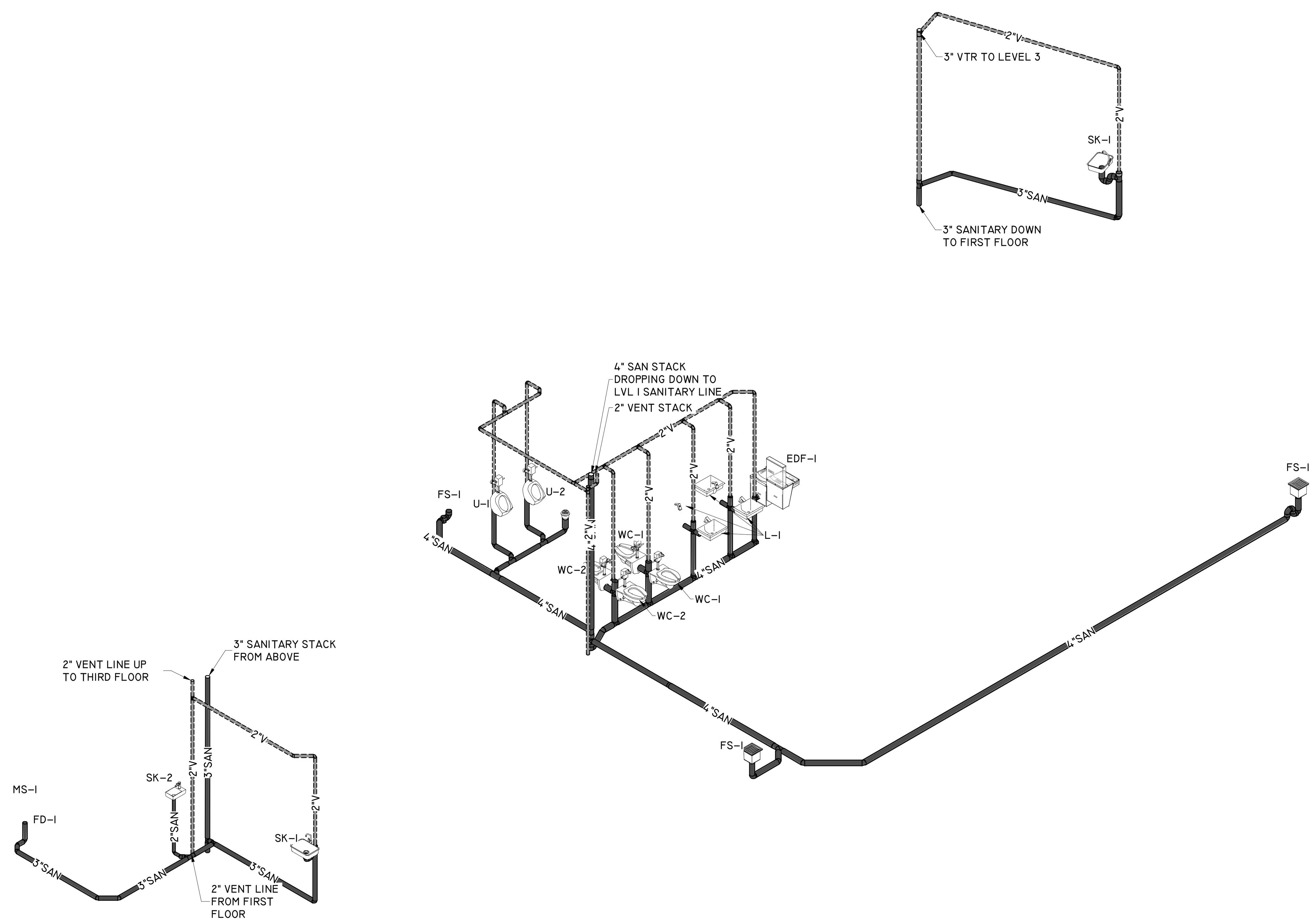

2
P403
RISER DIAGRAM SANITARY - LEVEL 2
SCALE :

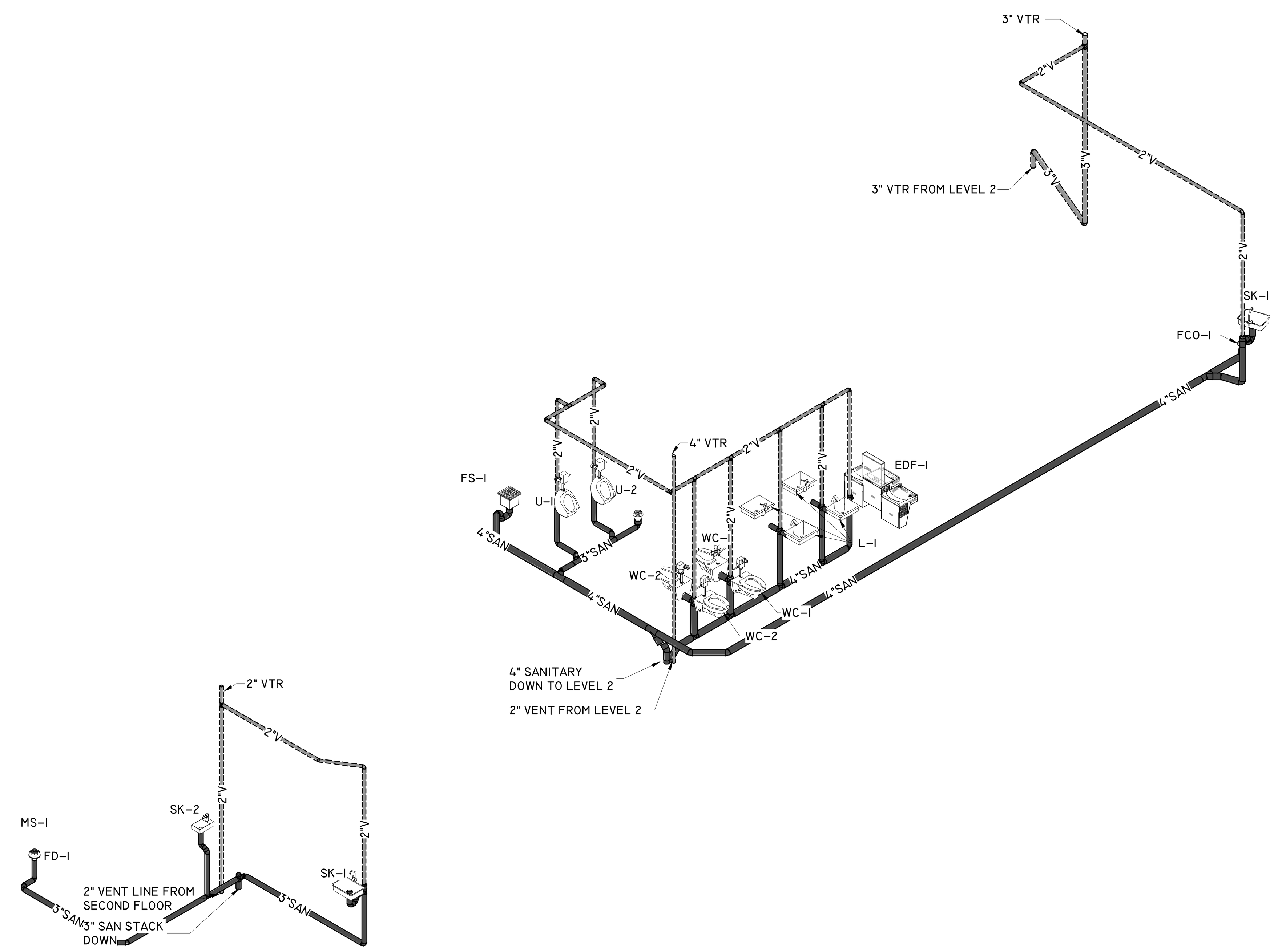

3
P403
RISER DIAGRAM SANITARY - LEVEL 3
SCALE :

FSGROUP®
ARCHITECTS
13105 Northwest Fwy Suite 1110
Houston Texas 77040
713 344 1752 Office
www.fsdesignbuild.com

PROJECT NAME

THE STATE OF TEXAS
FORT BEND COUNTY

INFORMATION TECHNOLGY BUILDING
EUGENE HEIMANN CIRCLE
FORT BEND COUNTY . TEXAS

CONSULTANTS

Infrastructure Associates
INFRASTRUCTURE ASSOCIATES, INC.
6117 RICHMOND AVENUE, SUITE 200
HOUSTON, TEXAS 77057-6267
(713) 622-0120 PH (713) 622-0557 FAX
TBPE FIRM REGISTRATION #F-4506
WWW.IAHOUSTON.COM

PROFESSIONAL SEAL

STATE OF TEXAS
ANWAR HASSAN
64671
LICENSED
PROFESSIONAL ENGINEER
2024-05-15

ISSUED FOR
ISSUED FOR PROPOSALS AND PERMIT

REVISIONS

No.	DESCRIPTION	DATE

KEY PLAN

TRUE
NORTH

SHEET TITLE
RISER DIAGRAM - SANITARY

SCALE

DATE
05/15/2024

PROJECT NUMBER
2319

SHEET NUMBER
P403

ABBREVIATIONS LEGEND

ACRONYM	DESCRIPTION	ACRONYM	DESCRIPTION
°F	FAHRENHEIT	FAS	FIRE ALARM SYSTEM
AC	AIR CONDITIONING	FCU	FAN COIL UNIT
AHU	AIR HANDLING UNIT	FPM	FEET PER MINUTE
AI	ANALOG INPUT	FPT	FAN POWER TERMINAL
ALT	ALTITUDE	GPM	GALLON PER MINUTE
AO	ANALOG OUTPUT	HP	HORSE POWER
APPROX	APPROXIMATE	HVAC	HEATING VENTILATION AND AIR CONDITIONING
ATM	ATMOSPHERE	HWR	HOT WATER RETURN
AVG	AVERAGE	HWS	HOT WATER SUPPLY
B	BOILER	ISP	INTERNAL STATIC PRESSURE
BARO	BAROMETER (-TRIC)	Kw	KILOWATT
BAS	BUILDING AUTOMATION SYSTEM	LAT	LEAVING AIR TEMPERATURE
BHP	BRAKE HORSE POWER	LHG	LATENT HEAT GIANT
BI	BINARY INPUT	LWT	LEAVING WATER TEMPERATURE
BO	BINARY OUTPUT	MUA	MAKEUP AIR UNIT
BTU	BRITISH THERMAL UNIT	MX	MIXING AIR
BTUH	BRITISH THERMAL UNIT/HOURS	NA	NOT APPLICABLE
CFM	CUBIC FEET PER MINUTE	NO.	NUMBER
CHWP	CHILL WATER PUMP	O/A	OUTSIDE AIR
CHWR	CHILL WATER RETURN	OAHU	OUTSIDE AIR HANDLING UNIT
CHWS	CHILL WATER SUPPLY	PSI	POUNDS PER SQUARE INCH
COEFF	COEFFICIENT	RA	RETURN AIR
CRAC	COMPUTER AIR CONDITIONER	REV	REVOLUTIONS
CT	COOLING TOWER	RTU	ROOF TOP UNIT
CU	CONDENSING UNIT	S/A	SUPPLY AIR
CV	CONSTANT VOLUME	SG	SPECIFIC GRAVITY
CWP	CONDENSER WATER PUMP	SHG	SENSIBLE HEAT GAIN
CWR	CONDENSER WATER RETURN	SP	STATIC PRESSURE
CWS	CONDENSER WATER SUPPLY	SPEC	SPECIFICATION
DB	DRY BULB	TCH	THERMOSTAT/ CO2 SENSOR/ HUMIDISTAT
DI	DIGITAL INPUT	T-STAT	THERMOSTAT
DO	DIGITAL OUTPUT	TYP.	TYPICAL
EAT	ENTERING AIR TEMPERATURE	UH	UNIT HEATER
EMC	ELECTRONICALLY COMMUTATED MOTOR	VAV	VARIABLE AIR VOLUME
ESP	EXTERNAL STATIC PRESSURE	VFD	VARIABLE FREQUENCY DRIVE
EWT	ENTERING WATER TEMPERATURE	WB	WET BULB
EX	EXHAUST AIR		

NOTE:
NOT ALL ITEMS NECESSARILY USED.

MECHANICAL SYMBOLS LEGEND

	SUPPLY AIR DUCT UP (PLAN)	A X CFM	DIFFUSER TYPE AND CFM		CHECK VALVE, SWING GATE
	SUPPLY AIR DUCT DOWN (PLAN)	T	THERMOSTAT - MOUNT 48" AFF UNO		ANGLE PRESSURE RELIEF VALVE
	RETURN OR OUTSIDE AIR DUCT UP (PLAN)	H	HUMIDISTAT	PRV	PRESSURE REDUCING VALVE
	RETURN OR OUTSIDE AIR DUCT DOWN (PLAN)	F	FIRESTAT		LOCK SHIELD
	EXHAUST AIR DUCT UP (PLAN)	TCH	THERMOSTAT/ CO2 SENSOR/ HUMIDISTAT MOUNT 48" AFF UNO		QUICK OPENING/CLOSING VALVE
	EXHAUST AIR DUCT DOWN (PLAN)	SD	SMOKE DETECTOR		PRESSURE REGULATOR
	RETURN AIR/TRANSFER AIR BOOT		PIPE UP		STRAINER W/BLOW DOWN VALVE
	CEILING SUPPLY AIR DEVICE		PIPE DOWN		THREE-WAY VALVE (ELECTRIC)
	SIDEWALL SUPPLY/EXHAUST REGISTER		CAP		TWO-WAY VALVE (ELECTRIC)
	CEILING RETURN AIR / EXHAUST REGISTER		90° ELBOW		FLEXIBLE CONNECTION
	RETURN AIR GRILLE WITH BOOT		45° ELBOW	EJ	EXPANSION JOINT
	BRANCH DUCT TAP		45° ELBOW DOWN (OGEE)		THERMOMETER
	DUCT SPLIT WITHOUT VANES		TEE	TW	THERMOMETER WELL
AD	ACCESS DOOR		TEE UP		TEST PLUG
	TRANSITION IN DUCT		TEE DOWN		PRESSURE GAUGE W/GAUGE COCK
	DUCT WITH SPIN-IN CONNECTOR FLEXIBLE DUCT CONN. TO RECTANGULAR		TOP CONNECTION		MANUAL AIR VENT
AP	ACCESS PANEL		CROSS		AUTOMATIC AIR VENT
	DUCT ELBOW WITH TURNING VANES		UNION (SCREWED)	S	SOLENOID VALVE
	DUCT ELBOW WITHOUT VANES		UNION (FLANGED)	FS	FLOW SWITCH
	FLEXIBLE CONNECTION, FLEXIBLE DUCT	T	DUCT MOUNTED TEMPERATURE SENSOR		TEMPERATURE AND PRESSURE RELIEF VALVE
VD	VOLUME DAMPER	P	DUCT MOUNTED PRESSURE SENSOR		STEAM TRAP
M	MOTORIZED VOLUME DAMPER	SD	DUCT MOUNTED SMOKE DETECTOR		STEAM MOISTURE SEPARATOR
F	FIRE DAMPER		PIPE BREAK	EP	CONTROL, ELECTRIC-PNEUMATIC
SD	SMOKE DAMPER		CONCENTRIC REDUCER	PE	CONTROL, PNEUMATIC-ELECTRIC
FS	COMBINATION FIRE/SMOKE DAMPER		ECCENTRIC REDUCER		RED. PRESS PRINCIPAL BACKFLOW PREVENTER
AFMS	AIR FLOW MONITORING STATION		END SUCTION PUMP	PCHWR	PRIMARY CHILLED WATER RETURN
APD	AIR PRESSURE DIFFERENTIAL SWITCH	OR	BALL VALVE	PCHWS	PRIMARY CHILLED WATER SUPPLY
	RISE IN DUCT ELEVATION		BUTTERFLY VALVE	CWR	CONDENSER WATER RETURN
	DROP IN DUCT ELEVATION		ISOLATION VALVE	CWS	CONDENSER WATER SUPPLY
SD DIM.	SPLITTER DAMPER - DIMENSION AS NOTED ON DRAWING		GATE VALVE WITH QUICK DISCONNECT	HHWR	HOT WATER RETURN
BDD	BACK DRAFT DAMPER		TWO-WAY VALVE	HHWS	HOT WATER SUPPLY
UCD 1"	UNDERCUT DOOR 1"		THREE-WAY VALVE	CD	CONDENSATE DRAIN
RE: 1/M-7	REFER TO DETAIL #1 ON DRAWING M-7		BALANCING VALVE	SCHWR	SECONDARY CHILLED WATER RETURN
FM	FLOW METER	MPS	MEDIUM PRESSURE STEAM SUPPLY	SCHWS	SECONDARY CHILLED WATER SUPPLY
CO2	CO2 SENSOR	REF	REFRIGERANT PIPE	CD	CONDENSATING PIPE

NOTE:
NOT ALL ITEMS NECESSARILY USED.

MECHANICAL GENERAL NOTES

1. SEE ARCHITECTURAL PLANS FOR TYPE OF CEILING. FOR LOCATIONS OF WALL MOUNTED DEVICES AND LOCATION HEIGHTS COORDINATE WITH ARCH,
2. DO NOT OPERATE AIR HANDLERS, FAN COIL UNITS, OR EXHAUST FANS UNTIL ALL INTERIOR CLEANING AND PAINTING IS COMPLETE. THE CLEANING OF FOULED COILS OR FAN ASSEMBLIES DUE TO PAINT OR CONSTRUCTION DEBRIS WILL BE THE RESPONSIBILITY OF THE HVAC CONTRACTOR.
3. RECTANGULAR, OR ROUND DUCT SIZES INDICATED ARE ACTUAL SHEET METAL DIMENSIONS IN INCHES ALL ROUND DUCT SIZES INDICATE NET FREE INSIDE DIAMETER AND DO NOT ACCOUNT FOR ANY INSULATION. ROUND DUCTS ARE EXTERNALLY INSULATED PER SPECIFICATIONS.
4. SCHEDULED MANUFACTURERS ARE BASIS OF DESIGN. SEE SPECIFICATIONS FOR OTHER ACCEPTABLE MANUFACTURERS.
5. MAJOR EQUIPMENT SHOWN ON THE PLANS AND ELEVATIONS ILLUSTRATE THE GENERAL ARRANGEMENT AND SPACE ALLOCATION. VERIFY THE SPACE REQUIREMENTS FOR EACH SYSTEM COMPONENT USING MANUFACTURER CERTIFIED SHOP DRAWINGS AND MAKE THE NECESSARY ADJUSTMENTS IN EQUIPMENT PLACEMENT AND CONNECTIONS IN ORDER TO ACCOMMODATE THE EXACT EQUIPMENT TO BE INSTALLED.
6. REFER TO SPECIFICATIONS FOR SUPPORTS, ANCHOR BOLTS AND HANGERS FOR ALL EQUIPMENT. OTHER MISCELLANEOUS STEEL BRACING, SUPPORTS, AND REINFORCING STEEL REQUIRED TO SUPPORT EQUIPMENT SHALL BE FURNISHED AS PART OF THE SCOPE OF WORK OF DIVISION 15.
7. INSTALL SMOKE DETECTORS IN CONFORMANCE WITH 2015 IMC WITH CITY OF STAFFORD, TX AMENDMENTS.
8. ALL WORK SHALL BE PERFORMED IN ACCORDANCE WITH ALL APPLICABLE CODES, STANDARDS AND AUTHORITIES HAVING JURISDICTION.
9. ALL SUPPLY AND RETURN AIR DUCTS LOCATED IN UNCONDITIONED ATTICS OR OUTSIDE SHALL BE INSULATED (R-5 UNCONDITIONED AND R-8 OUTSIDE BUILDINGS).
10. FLEX DUCTS SHALL BE SAME SIZE AS DIFFUSER NECKS.
11. SEAL ALL PENETRATIONS OF FLOORS, SMOKE WALLS, FIRE WALLS, LAB WALLS, AND EXTERIOR WALLS.
12. ARCHITECT SHALL APPROVE ALL THERMOSTAT OR TEMPERATURE SENSOR LOCATIONS.
13. DO NOT RUN DUCT OR PIPE OVER ELECTRICAL PANELS.
14. COORDINATE EXACT LOCATION OF EQUIPMENT, DUCTWORK, AIR DEVICES, AND THERMOSTATS WITH ARCHITECTURAL, STRUCTURAL AND REFLECTED CEILING PLANS.
15. ALL PENETRATIONS IN RATED WALLS SHALL BE SEALED WITH AN APPROVED FIRE RETARDENT SEALANT.
16. ALL DUCT RUN-OUTS TO SUPPLY AND EXHAUST, DIFFUSERS AND REGISTERS, SHALL HAVE MANUAL BALANCING DAMPERS. PROVIDE YOUNG REGULATORS WHERE CEILING IS INACCESSIBLE.
17. ALL DUCTWORK SHALL BE IN ACCORDANCE WITH LATEST SMACNA STANDARDS.
18. SECURE ALL PERMITS AND PROVIDE ANY REQUIRED TEMPORARY UTILITIES.
19. GUARANTEE LABOR AND MATERIAL FOR 1 YEAR AND PER DIV.1.
20. PROVIDE AUTOMATIC AIR VENTS ON ALL HIGH POINTS OF PIPING SYSTEMS AND DRAIN VALVED CONNECTIONS AT ALL LOW POINTS OF PIPING SYSTEMS.
21. REFER TO SPECIFICATIONS FOR ADDITIONAL INFORMATION ON SCOPE OF WORK AND REQUIRED INSTALLATION.
22. VERIFY FINAL LOCATION OF THERMOSTATS WITH ARCHITECT AND BUILDING ENGINEER PRIOR TO INSTALLATION.
23. ALL FLEXIBLE DUCT SHALL BE UL 181, CLASS 1 AIR DUCT BLACK LINER. MAXIMUM LENGTH OF FLEXIBLE DUCT SHALL NOT EXCEED 6'-0". PROVIDE RIGID ROUND INSULATED AIR DUCT RUNOUT AS REQUIRED. FLEXIBLE DUCT SHALL HAVE THE EQUIVALENT OF ONLY TWO 90 DEG. ELBOWS MAXIMUM. FLEXIBLE DUCT SIZE SHALL MATCH THE DIFFUSER NECK SIZE.
24. THE AIR QUANTITIES SHOWN ON THE DRAWINGS FOR INDIVIDUAL OUTLETS MAY BE CHANGED TO OBTAIN UNIFORM TEMPERATURE WITHIN EACH SPACE OR ZONE, BUT THE TOTAL AIR QUANTITY SHOWN FOR EACH ZONE MUST BE OBTAINED.
25. PROVIDE SMOKE DETECTOR FOR ALL UNITS WITH CAPACITY OF 2000 CFM AND HIGHER AS REQUIRED BY CODE. COORDINATE WITH 2015 IMC SECTION 606.
26. WITHIN 90 DAYS AFTER THE DATE OF SYSTEM ACCEPTANCE RECORD DRAWINGS OF THE ACTUAL INSTALLATION SHALL BE PROVIDED TO THE BUILDING OWNER OR THE DESIGNATED REPRESENTATIVE OF THE BUILDING OWNER. RECORD DRAWINGS SHALL INCLUDE AS A MINIMUM THE LOCATION AND PERFORMANCE DATA ON EACH PIECE OF EQUIPMENT, GENERAL CONFIGURATION OF DUCT AND PIPE DISTRIBUTION SYSTEM INCLUDING SIZES, AND THE TERMINAL AIR OR WATER DESIGN FLOW RATES.
27. OPERATING AND MAINTENANCE MANUALS SHALL BE PROVIDED TO THE BUILDING OWNER OR THE DESIGNATED REPRESENTATIVE OF THE BUILDING OWNER WITHIN 90 DAYS AFTER THE DATE OF SYSTEM ACCEPTANCE. THESE MANUALS SHALL BE IN ACCORDANCE WITH INDUSTRY-ACCEPTED STANDARDS (SEE APPENDIX E), AND SHALL INCLUDE, AT A MINIMUM, THE FOLLOWING:
   (A) SUBMITTAL DATA STATING EQUIPMENT SIZE AND SELECTED OPTIONS FOR EACH PIECE OF EQUIPMENT REQUIRING MAINTENANCE.
   (B) OPERATION MANUALS AND MAINTENANCE MANUALS FOR EACH PIECE OF EQUIPMENT REQUIRING MAINTENANCE, EXCEPT EQUIPMENT NOT FURNISHED AS PART OF THE PROJECT. REQUIRED ROUTINE MAINTENANCE ACTIONS SHALL BE CLEARLY IDENTIFIED.
   (C) NAMES AND ADDRESSES OF AT LEAST ONE SERVICE AGENCY.
   (D) HVAC CONTROLS SYSTEM MAINTENANCE AND CALIBRATION INFORMATION, INCLUDING WIRING DIAGRAMS, SCHEMATICS, AND CONTROL SEQUENCE DESCRIPTIONS. DESIRED OR FIELD-DETERMINED SET-POINTS SHALL BE PERMANENTLY RECORDED ON CONTROL DRAWINGS AT CONTROL DEVICES OR, FOR DIGITAL CONTROL SYSTEMS, IN PROGRAMMING COMMENTS.
   (E) A COMPLETE NARRATIVE OF HOW EACH SYSTEM IS INTENDED TO OPERATE, INCLUDING SUGGESTED SET-POINTS.
28. HOT WATER PIPE INSULATION SHALL BE MINIMUM 1.5" IF THE PIPE DIAMETER IS LESS THAN 1-1/2", 2" IF THE PIPE DIAMETER IS BIGGER THAN 1-1/2".
29. THE CONTRACTOR TO ENSURE THAT ALL DUCTWORK EITHER STORED ON SITE OR INSTALLED IN THE BUILDING IS THOROUGHLY, SEALED TO PROTECT AGAINST DIRT AND MOISTURE UNTIL SUCH TIME THAT THE BUILDING IS DEEMED BY THE OWNER TO BE ADEQUATELY CLEAN TO ALLOW FOR START-UP OF THE ASSOCIATED AIR HANDLING EQUIPMENT. IF DUCTWORK IS NOT BE SEALED AS SPECIFIED, THEN THE CONTRACTOR TO HAVE SUCH DUCTWORK PROFESSIONALLY CLEANED TO AN AS-NEW CONDITION AT NO COST TO THE OWNER.
30. NO PORTION OF THE TOTAL CONTRACT WILL BE DECLARED SUBSTANTIALLY COMPLETE UNTIL THE AUTOMATIC TEMPERATURE CONTROL SYSTEM HAS BEEN DEMONSTRATED TO BE COMPLETE AND FUNCTIONING AS INTENDED. THE TEMPERATURE CONTROL SYSTEM WILL BE COMPLETE AND FUNCTIONING AS INTENDED WHEN ALL OF THE SPACE TEMPERATURES ARE MAINTAINED AT PLUS OR MINUS TWO DEGREES OF SET POINT.
31. LOCATE VALVES WITHIN 18 INCHES OF CEILING SO THAT THEY ARE WITHIN REACH.
32. ALL EXPOSED PIPING INTERIOR AND EXTERIOR SHALL BE PAINTED. INTERIOR COLOR SHALL BE ACCORDING TO THE ADOPTED COLOR CODES AND SHALL BE APPROPRIATELY LABELED AT INTERVIEWS IN SPECIFIED HEIGHT LETTERS. PIPING EXPOSED TO VIEW SHALL BE PAINTED TO COMPLY TO COLOR SCHEME PER SPECIFICATIONS. PIPING ON ROOF/EXTERIOR SHALL BE PAINTED WITH EPOXY POLYURETHANE INDUSTRIAL COATING.

FSGROUP® ARCHITECTS
13105 Northwest Fwy Suite 1110
Houston Texas 77040
713 344 1752 Office
www.fsdesignbuild.com

PROJECT NAME

THE STATE OF TEXAS · FORT BEND COUNTY

INFORMATION TECHNOLGY BUILDING
EUGENE HEIMANN CIRCLE
FORT BEND COUNTY . TEXAS

CONSULTANTS

Infrastructure Associates
INFRASTRUCTURE ASSOCIATES, INC.
6117 RICHMOND AVENUE, SUITE 200
HOUSTON, TEXAS 77057-6267
(713) 622-0120 PH (713) 622-0557 FAX
TBPE FIRM REGISTRATION #F-4506
WWW.IAHOUSTON.COM

PROFESSIONAL SEAL

STATE OF TEXAS
ANWAR HASSAN
64671
LICENSED
PROFESSIONAL ENGINEER
2024-05-15

ISSUED FOR
ISSUED FOR PROPOSALS AND PERMIT

REVISIONS

No.	DESCRIPTION	DATE

KEY PLAN

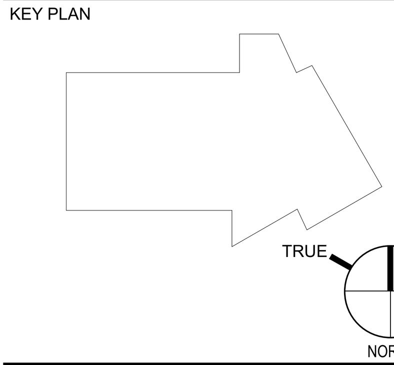

SHEET TITLE
SYMBOLS, NOTES, AND LEGENDS

SCALE

DATE
05/15/2024

PROJECT NUMBER
2319

SHEET NUMBER
M100

CHILLED WATER AIR HANDLER SCHEDULE

MARK	AIRFLOW (CFM)	OUTSIDE AIR FLOW (CFM)	CONFIGURATION	FAN		COOLING COIL										ELECTRICAL DATA			MANUFACTURER	NOTES
				E.S.P. (IN. WG.)	MOTOR (HP)	MAX FACE VEL. (FPM)	TOT. CAPACITY (MBH)	SEN. CAPACITY (MBH)	EAT DB/WB (°F)	LAT DB/WB (°F)	COIL ROWS	FPF	EWT (°F)	LWT (°F)	GPM	V/P/HZ	MCA	MOCP		
AHU-1	15,320	1,800	HORIZONTAL	3.0	20	440	520	391	76.0/63.5	51.7/51.5	6	96	42	52	103	480/3/60	31	35	CARRIER	ALL
AHU-2	13,490	1,380	HORIZONTAL	3.0	20	470	462	348	76.3/63.8	52.4/52.1	6	96	42	52	92	480/3/60	24	30	CARRIER	ALL
AHU-3	13,400	1,340	HORIZONTAL	3.0	20	450	451	339	76.3/63.8	52.2/52.0	6	96	42	52	90	480/3/60	24	30	CARRIER	ALL

NOTES:
1. PROVIDE 2" MERV-14 FILTER WITH THE UNIT.
2. PROVIDE UNIT EFFICIENCY IN COMPLIANCE WITH IECC.
3. PROVIDE UNIT WITH ASHRAE 62.1 COMPLIANT DRAIN PAN WITH WATER SENSING DEVICE.
4. PROVIDE UNIT WITH VFD..
5. PROVIDE UNIT WITH LOCAL DISCONNECT SWITCHES.
6. PROVIDE UNIT WITH COIL PULL ACCESS ON BOTH SIDES.

CHILLED WATER CRAC UNIT SCHEDULE

MARK	AIRFLOW (CFM)	OUTSIDE AIR FLOW (CFM)	CONFIGURATION	FAN		COOLING COIL										ELECTRICAL DATA		MANUFACTURER	NOTES
				E.S.P. (IN. WG.)	MOTOR (HP)	MAX FACE VEL. (FPM)	TOT. CAPACITY (MBH)	SEN. CAPACITY (MBH)	EAT DB/WB (°F)	LAT DB/WB (°F)	COIL ROWS	FPF	EWT (°F)	LWT (°F)	GPM	V/P/HZ	MOTOR POWER (HP)		
CRAC-1	11,500	-	HORIZONTAL	0.2	10	460	386	278	74.0/62.0	51.4/49.7	6	121	42	52	81	480/3/60	10	VERTIV-CW084	ALL
CRAC-2	11,500	-	HORIZONTAL	0.2	10	460	386	278	74.0/62.0	51.4/49.7	6	121	42	52	81	480/3/60	10	VERTIV-CW084	ALL
CRAC-3	2,500	-	HORIZONTAL	0.5	3	460	121	90	74.0/62.0	54.0/53.0	4	144	42	52	26	480/3/60	3	VERTIV-PW029	ALL

NOTES:
1. PROVIDE 4" MERV-8 FILTER WITH THE UNIT.
2. PROVIDE UNIT EFFICIENCY IN COMPLIANCE WITH IECC.
3. PROVIDE UNIT WITH ASHRAE 62.1 COMPLIANT DRAIN PAN WITH WATER SENSING DEVICE.
4. CRAC-1 AND CRAC-2 SHALL BE DOWN-FLOW CONFIGURATION WITH FRONT DISCHARGE AND GRILLE PROVIDED.
5. CRAC-3 SHALL BE UP-FLOW CONFIGURATION WITH RETURN AIR GRILLE ON THE UNIT SIDE.
6. PROVIDE CRAC-1 AND CRAC-2 WITH PLENUM EXTENSION UP TO CEILING.

DIFFUSER NECK-DUCT SIZE SCHEDULE

SUPPLY AIR (CFM)	DIFFUSER NECK AND BRANCH DUCT SIZE
0 - 100	6"
101 - 200	8"
201 - 300	10"
301 - 400	12"
401 - 500	14"

FAN SCHEDULE

FAN TAG	SERVING ROOM #	AIR VOLUME CFM	LOCATION	FAN TYPE	DRIVE TYPE	ESP INCH WC	MOTOR			MANUFACTURER	NOTES
							POWER (HP)	V/P/Hz	RPM		
EF-1	RESTROOMS	900	ROOF	CENTRIFUGAL	DIRECT	0.75	1/4	120/1/60	1,543	GREENHECK - VG	1,2
EF-2	SHOWERS	80	CEILING	CENTRIFUGAL	DIRECT	0.375	1/50	120/1/60	887	GREENHECK	1,2,3
EF-3	SHOWERS	80	CEILING	CENTRIFUGAL	DIRECT	0.375	1/50	120/1/60	887	GREENHECK	1,2,3
SF-1	VESTIBULE	200	CEILING	CENTRIFUGAL	DIRECT	0.25	1/30	120/1/60	949	GREENHECK - VG	1,2,4

NOTES:
1. PROVIDE UNITS WITH ECM MOTORS, LOCAL SPEED CONTROL, CONTROL VOLTAGE POWER SUPPLY, AND NON FUSED DISCONNECT SWITCH.
2. PROVIDE FAN WITH MOTORIZED DAMPER INTERLOCKED TO FAN MOTOR.
3. INTERLOCK FAN OPERATION WITH LIGHT SWITCH.
4. PROVIDE LOW PROFILE CABINET FAN.

AIR DEVICE SCHEDULE

MARK	MAKE	TYPE	MODEL	FACE SIZE	NECK/DUCT SIZE	MATERIAL	FINISH	MOUNTING	NOTES
A	TITUS	SUPPLY	OMNI-AA	24X24	SEE NECK SCHEDULE	ALUMINUM	PRIME COAT	LAY-IN	1-4
B	TITUS	RETURN	45-F	24X24	SEE NECK SCHEDULE	ALUMINUM	PRIME COAT	LAY-IN	1-4
C	TITUS	EXHAUST	50-F	24X24	SEE NECK SCHEDULE	ALUMINUM	PRIME COAT	LAY-IN	1-4
D	TITUS	EXHAUST	350-F	SEE PLANS	SEE PLANS	ALUMINUM	PRIME COAT	SIDEWALL/LAY-IN	1-4
E	TITUS	SUPPLY	271-F	12X10	SEE NECK SCHEDULE	ALUMINUM	PRIME COAT	SIDEWALL	1-4
F	TITUS	SUPPLY	271-F	16X4	SEE NECK SCHEDULE	ALUMINUM	PRIME COAT	SIDEWALL DUCT-MOUNTED	1-3
G	TITUS	SUPPLY	TBD-30	48"X6", 3 SLOT, 1" SLOTS	SEE NECK SCHEDULE	ALUMINUM	PRIME COAT	LAY-IN	ALL
H	TITUS	RETURN	MLR-39	48"X14", 8 SLOT, 1" SLOTS	SEE NECK SCHEDULE	ALUMINUM	PRIME COAT	LAY-IN	1-4
I	TITUS	SUPPLY	CT-PP-3	36"X4", 30° DEFLECTION	-	ALUMINUM	PRIME COAT	SIDEWALL DUCT-MOUNTED	1-3

NOTES:
1. REFER TO PLANS FOR AIR FLOW RATE.
2. REFER TO DIFFUSER NECK-DUCT SIZE SCHEDULE FOR TAKE OFF BRANCH SIZES.
3. COORDINATE FINAL FINISH AND COLOR WITH THE ARCHITECT.
4. COORDINATE LAY-IN/GYPSUM BOARD CEILING TYPE WITH FINAL ARCHITECTURAL PLANS.
5. PROVIDE DIFFUSER WITH ADJUSTABLE PATTERN DAMPER.

AIR COOLED CHILLER SCHEDULE

MARK	NOMINAL CAPACITY (TONS)	ACTUAL CAPACITY (TONS)	TOTAL UNIT POWER (KW)	COOLER					AIR COOLED CONDENSER	ELECTRIC SUPPLY	MCA	MOCP	OPERATING WEIGHT LBS.	REFRIGERANT	MANUFACTURER	REMARKS
				FLOW GPM	ENT. FLUID TEMP° F	LVG. FLUID TEMP F	MAX FLUID PRESS. DROP FT.	FLUID TYPE	AMBIENT TEMP° F							
CH-1	150	136	161	272	54	42	45	WATER	105	480/3/60	300	350	8,081	R-32	CARRIER	ALL
CH-2	150	136	161	272	54	42	45	WATER	105	480/3/60	300	350	8,081	R-32	CARRIER	ALL

NOTES:
1. PROVIDE UNIT SUITABLE FOR LOW AMBIENT OPERATION.
2. PROVIDE UNIT WITH FACTORY INSTALLED AND WIRED SINGLE POINT ELECTRICAL POWER CONNECTION, FUSED DISCONNECT SWITCH, AND CONTROL VOLTAGE POWER SUPPLY IN NEMA 4 ENCLOSURE.
3. PROVIDE UNIT WITH TEFC CONDENSER FAN MOTORS.
4. PROVIDE CHILLERS WITH SCROLL COMPRESSORS.
5. PROVIDE FACTORY INSTALLED THERMAL DISPERSION TYPE FLOW SWITCH.
6. PROVIDE UNIT WITH FACTORY INSTALLED DIGITAL CONTROLS AND BACNET INTERFACE.
7. SELECT THE CHILLERS FOR VARIABLE PRIMARY CHILLED WATER FLOW APPLICATION.
8. PROVIDE CHILLER WITH FOLLOWING EFFICIENCIES:
   - RATED OPERATING CONDITION (105 °F AMBIENT) = FULL LOAD EER 8.70 BTU/WH AND IPLV 16.24 BTU/WH.
   - RATED AHRI CONDITION (95 °F AMBIENT) = FULL LOAD EER 10.58 BTU/WH AND IPLV 17.40 BTU/WH.
9. PROVIDE CONDENSER COILS WITH E-COAT CORROSION PROTECTION AND HAIL GUARDS.

ELECTRIC DUCT HEATER SCHEDULE

MARK	SERVES	SUPPLY CFM	EAT/LAT	MOUNTING LOCATION	HEATER SIZE (KW)	V/PH/HZ	NOTES
EDH-1	AHU - 1	1,800	25 /56	O/A DUCT	18	480/3/60	ALL
EDH-2	AHU - 2	1,400	25 /58	O/A DUCT	15	480/3/60	ALL
EDH-3	AHU - 3	1,400	25 /58	O/A DUCT	15	480/3/60	ALL

NOTES:
1. PROVIDE TEMP SENSOR TO ACTIVATE DUCT HEATER ONLY WHEN IT DROPS BELOW 55° . TEMP SENSOR TO BE LOCATED DOWN STREAM OF DUCT HEATER.
2. PROVIDE DUCT HEATER WITH SCR CONTROLLER

PUMP SCHEDULE

PLAN MARK	LOCATION	MANUFACTURER	SERIES & MODEL	IMP. DIAMETER	TYPE	GPM	TDH (FT)	MIN EFF (%)	RPM	HP	ELECTRIC SUPPLY	NOTES
CHWP-1	MECH YARD	B & G	E 1510	9.5	FRAME MOUNTED, END SUCTION	300	80	84	1741	10	480/3/60	ALL
CHWP-2	MECH YARD	B & G	E 1510	9.5	FRAME MOUNTED, END SUCTION	300	80	84	1741	10	480/3/60	ALL

NOTES:
1. PROVIDE PUMP WITH MATHCING SUCTION DIFFUSER.
2. PROVIDE PUMP WITH INVERTER DUTY PREMIUM EFFICIENCY TEFC MOTOR.
3. PROVIDE PUMP WITH VFD.

ELECTRIC HEATER SCHEDULE

MARK	UH-1
DISCHARGE DIRECTION	HORIZONTAL
SERVES	FIRE RISER
MANUFACTURER	REZNOR
MODEL NUMBER	EGHB
HEATER SIZE (KW)	2.0
AIRFLOW (CFM)	510
MOTOR RPM	1550 RPM
VOLTAGE	277/1/60
NOTES	ALL

NOTES:
1. PROVIDE MOUNTING BRACKET.
2. PROVIDE UNIT HEATERS WITH LOCAL THERMOSTAT.
3. PROVIDE 24V RELAY KIT WITH TRANSFORMER.
4. HEATER SHALL BE FAN FORCED TYPE.
5. PROVIDE WITH LOCAL DISCONNECT IN NEMA 1 ENCLOSURE.

DUCTLESS MINI SPLIT DX SYSTEM SCHEDULE

MARK	SERVING	NOMINAL CFM	EAT DB/WB	LAT DB/WB	TOTAL CAP. BTU/HR	SENSIBLE CAP. BTU/HR	FAN COIL MAKE-MODEL	CONDENSING UNIT TAG	CONDENSING UNIT MAKE-MODEL	CONDENSING UNIT			NOTES
										V/P/HZ	MCA	MOCP	
FCU-A	ELECTRICAL ROOM	890	74/62	55/54	12,000	10,800	CARRIER	CU-A	CARRIER	208/1/60	12	15	ALL
FCU-B	ELECTRICAL ROOM	890	74/62	55/54	12,000	10,800	CARRIER	CU-B	CARRIER	208/1/60	12	15	ALL
FCU-C	ELECTRICAL ROOM	890	74/62	55/54	12,000	10,800	CARRIER	CU-C	CARRIER	208/1/60	12	15	ALL
FCU-D	ELECTRICAL ROOM	890	74/62	55/54	12,000	10,800	CARRIER	CU-D	CARRIER	208/1/60	12	15	ALL

NOTES:
1. PROVIDE CONDENSATE DRAIN, TRAP AND RUN TO THE NEAREST DRAIN OUTLET AS INDICATED ON DRAWINGS.
2. PROVIDE MATCHING CONDENSING UNIT AS INDICATED.
3. MANUFACTURES SHALL RECONFIRM ALL REFRIGERANT LINES, SIZES INDICATED AND SUBMIT A PART OF EQUIPMENT SUBMITTAL.
4. PROVIDE WASHABLE FILTER WITH THE UNIT.
5. UNIT EER MUST COMPLY WITH LATEST IECC REQUIREMENTS.
6. INDOOR UNIT SHALL RECEIVE ITS POWER FROM OUTDOOR UNIT.
7. PROVIDE UNIT WITH LOCAL DIGITAL THERMOSTAT.
8. PROVIDE UNIT WITH REFRIGERANT R410A.
9. PROVIDE COOLING ONLY UNIT.

FSGROUP®
ARCHITECTS
13105 Northwest Fwy Suite 1110
Houston Texas 77040
713 344 1752 Office
www.fsdesignbuild.com

PROJECT NAME

THE STATE OF TEXAS
FORT BEND COUNTY

INFORMATION TECHNOLGY BUILDING
EUGENE HEIMANN CIRCLE
FORT BEND COUNTY . TEXAS

CONSULTANTS

Infrastructure Associates
INFRASTRUCTURE ASSOCIATES, INC.
6117 RICHMOND AVENUE, SUITE 200
HOUSTON, TEXAS 77057-6267
(713) 622-0120 PH (713) 622-0557 FAX
TBPE FIRM REGISTRATION #F-4506
WWW.IAHOUSTON.COM

PROFESSIONAL SEAL

STATE OF TEXAS
ANWAR HASSAN
64671
LICENSED
PROFESSIONAL ENGINEER
2024-05-15

ISSUED FOR
ISSUED FOR PROPOSALS AND PERMIT

REVISIONS

No.	DESCRIPTION	DATE

KEY PLAN

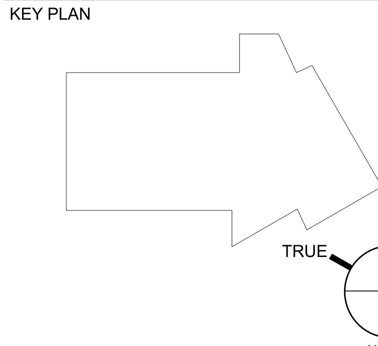

SHEET TITLE
SCHEDULE

SCALE

DATE
05/15/2024

PROJECT NUMBER
2319

SHEET NUMBER
M101

FAN POWERED VARIABLE VOLUME TERMINAL UNITS (FPT)

TAG	TYPE	PRIMARY AIR CFM		ESP (IN WG)		FAN MOTOR (HP)	HEATING (CFM)	ELECTRIC RE-HEAT		CAPACITY (KW)	ELECTRICAL (V/Ph/Hz)	MANUFACTURER	NOTES	ASSOCIATED AHU
		MAX	MIN	INLET	OUTLET			EAT	LAT					
FPT-1-1	SERIES	900	270	0.5	0.5	1/4	450	63	85	4.00	277/1/60	PRICE	ALL	1
FPT-1-2	SERIES	2400	720	0.5	0.5	1/2	1200	63	85	9.00	480/3/60	PRICE	ALL	1
FPT-1-3	SERIES	2400	720	0.5	0.5	1/2	1200	63	85	9.00	480/3/60	PRICE	ALL	1
FPT-1-4	SERIES	2320	696	0.5	0.5	1/2	1160	63	85	9.00	480/3/60	PRICE	ALL	1
FPT-1-5	SERIES	1500	450	0.5	0.5	1/4	750	63	85	6.00	277/1/60	PRICE	ALL	1
FPT-1-6	SERIES	600	180	0.5	0.5	1/4	.	63	.	.	277/1/60	PRICE	ALL	1
FPT-1-7	SERIES	720	216	0.5	0.5	1/4	360	63	85	4.00	277/1/60	PRICE	ALL	1
FPT-1-8	SERIES	1300	390	0.5	0.5	1/4	.	63	.	.	277/1/60	PRICE	ALL	1
FPT-1-9	SERIES	1440	432	0.5	0.5	1/4	.	63	.	.	277/1/60	PRICE	ALL	1
FPT-1-10	SERIES	980	294	0.5	0.5	1/4	490	63	85	4.00	277/1/60	PRICE	ALL	1
FPT-1-11	SERIES	1060	318	0.5	0.5	1/4	530	63	85	4.00	277/1/60	PRICE	ALL	1
FPT-2-1	SERIES	1600	480	0.5	0.5	1/3	800	63	85	8.00	480/3/60	PRICE	ALL	2
FPT-2-2	SERIES	1650	495	0.5	0.5	1/3	830	63	85	6.00	277/1/60	PRICE	ALL	2
FPT-2-3	SERIES	1700	510	0.5	0.5	1/3	850	63	85	7.00	480/3/60	PRICE	ALL	2
FPT-2-4	SERIES	2200	660	0.5	0.5	1/2	1100	63	85	8.00	480/3/60	PRICE	ALL	2
FPT-2-5	SERIES	760	228	0.5	0.5	1/4	380	63	85	3.00	277/1/60	PRICE	ALL	2
FPT-2-6	SERIES	1760	528	0.5	0.5	1/3	880	63	85	7.00	480/3/60	PRICE	ALL	2
FPT-2-7	SERIES	1290	387	0.5	0.5	1/4	650	63	85	6.00	277/1/60	PRICE	ALL	2
FPT-2-8	SERIES	1240	372	0.5	0.5	1/4	620	63	85	5.00	277/1/60	PRICE	ALL	2
FPT-2-9	SERIES	1660	498	0.5	0.5	1/3	830	63	85	6.00	277/1/60	PRICE	ALL	2
FPT-3-1	SERIES	500	150	0.5	0.5	1/4	250	63	85	2.00	277/1/60	PRICE	ALL	3
FPT-3-2	SERIES	630	189	0.5	0.5	1/4	320	63	85	3.00	277/1/60	PRICE	ALL	3
FPT-3-3	SERIES	425	127.5	0.5	0.5	1/4	220	63	85	2.00	277/1/60	PRICE	ALL	3
FPT-3-4	SERIES	800	240	0.5	0.5	1/4	400	63	85	3.00	277/1/60	PRICE	ALL	3
FPT-3-5	SERIES	1230	369	0.5	0.5	1/4	620	63	85	5.00	277/1/60	PRICE	ALL	3
FPT-3-6	SERIES	1400	420	0.5	0.5	1/4	700	63	85	6.00	277/1/60	PRICE	ALL	3
FPT-3-7	SERIES	2000	600	0.5	0.5	1/3	1000	63	85	8.00	480/3/60	PRICE	ALL	3
FPT-3-8	SERIES	1200	360	0.5	0.5	1/4	600	63	85	5.00	277/1/60	PRICE	ALL	3
FPT-3-9	SERIES	980	294	0.5	0.5	1/4	490	63	85	4.00	277/1/60	PRICE	ALL	3
FPT-3-10	SERIES	1590	477	0.5	0.5	1/3	800	63	85	6.00	277/1/60	PRICE	ALL	3
FPT-3-11	SERIES	2080	624	0.5	0.5	1/3	1040	63	85	10.00	480/3/60	PRICE	ALL	3

NOTES:

1. PROVIDE TERMINAL UNITS WITH SINGLE POINT ELECTRICAL CONNECTIONS AND INTEGRAL DISCONNECT SWITCHES.
2. INLET SIZE PER MANUFACTURER SPECIFICATIONS.

FSGROUP®
ARCHITECTS
13105 Northwest Fwy Suite 1110
Houston Texas 77040
713 344 1752 Office
www.fsdesignbuild.com

PROJECT NAME

INFORMATION TECHNOLGY BUILDING
EUGENE HEIMANN CIRCLE
FORT BEND COUNTY . TEXAS

CONSULTANTS

Infrastructure Associates
INFRASTRUCTURE ASSOCIATES, INC.
6117 RICHMOND AVENUE, SUITE 200
HOUSTON, TEXAS 77057-6267
(713) 622-0120 PH (713) 622-0557 FAX
TBPE FIRM REGISTRATION #F-4506
WWW.IAHOUSTON.COM

PROFESSIONAL SEAL

STATE OF TEXAS
ANWAR HASSAN
64671
LICENSED
PROFESSIONAL ENGINEER
2024-05-15

ISSUED FOR

ISSUED FOR PROPOSALS AND PERMIT

REVISIONS

No.	DESCRIPTION	DATE

KEY PLAN

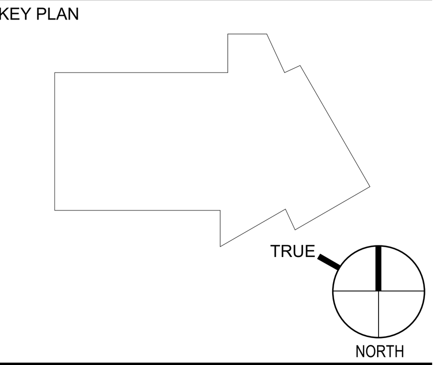

SHEET TITLE

SCHEDULE

SCALE

DATE 05/15/2024

PROJECT NUMBER 2319

SHEET NUMBER

M102

GENERAL NOTES:

1. PROVIDE DOUBLE WALL CONSTRUCTION SPIRAL ROUND DUCTWORK IN ALL AREAS WITH EXPOSED CEILINGS. COORDINATE FINISH WITH ARCHITECT.

KEYED NOTE LEGEND

1	PROVIDE RETURN AIR TRANSFER BOOT AND GRILLE AS SHOWN.
2	PROVIDE 14"X14" RETURN AIR OPENING ABOVE CEILING ON WALL GOING TO DECK.
3	PROVIDE RETURN AIR TRANSFER DUCT AS SHOWN. OFFSET DUCTS AS REQUIRED FOR CLEARANCE.
4	ROUTE CONDENSATE TO NEAREST SINK. PROVIDE P-TRAP MODEL J.R. SMITH 9200 OR SIMILAR. PROVIDE CONDENSATE PUMP.
5	PROVIDE ACCESS DOOR IN CEILING FOR FPT MAINTAINANCE.
6	ROUTE 8" EXHAUST DUCT THROUGH CHASE TO ROOF. SEE 1/M202 FOR CONTINUATION.
7	PROVIDE 20"X18" TRANSFER DUCT AND GRILLE AS SHOWN. LOCATE GRILLE AS HIGH AS POSSIBLE WITHOUT CONFLICT WITH OTHER DICSIPLINES' WORK.
8	PROVIDE 36"X24" LOUVER MODEL RUSKIN EME 520DD OR SIMILAR FOR BUILDING RELIEF. PROVIDE 36"X24" PLENUM BOX WITH COUNTERBALANCE BACKDRAFT DAMPER FOR CONNECTION TO 20"X18" GRILLE AS SHOWN.
9	PROVIDE 36"X30" RETURN GRILLE AND RETURN AIR OPENING AS SHOWN. LOCATE GRILLE AS HIGH AS POSSIBLE WITHOUT CONFLICT WITH OTHER DICSIPLINES' WORK.
10	PROVIDE 16"X16" TRANSFER DUCT WITH BOOT AND GRILLE AS SHOWN. LOCATE GRILLE AS HIGH AS POSSIBLE WITHOUT CONFLICT WITH OTHER DICSIPLINES' WORK.
11	ROUTE 14"X8" EXHAUST DUCT THROUGH CHASE TO WEATHER HOOD ON ROOF. SEE 1/MEP102 FOR LOCATION ON ROOF.

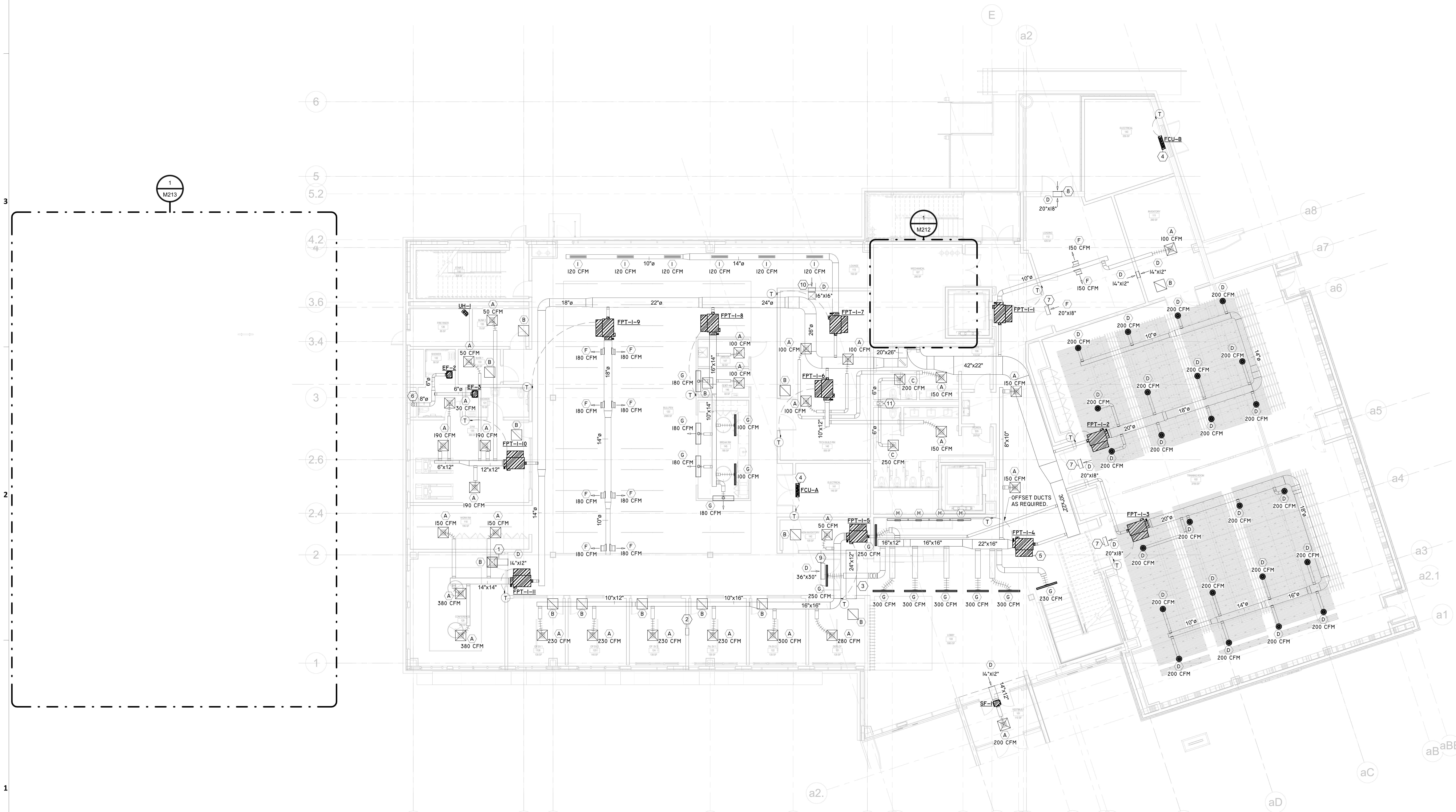

1 M201 LEVEL 1 - FLOOR PLAN - HVAC
SCALE : 1/8" = 1'-0"

FSGROUP® ARCHITECTS
13105 Northwest Fwy Suite 1110
Houston Texas 77040
713 344 1752 Office
www.fsdesignbuild.com

PROJECT NAME

THE STATE OF TEXAS FORT BEND COUNTY

INFORMATION TECHNOLGY BUILDING
EUGENE HEIMANN CIRCLE
FORT BEND COUNTY , TEXAS

CONSULTANTS

Infrastructure Associates
INFRASTRUCTURE ASSOCIATES, INC.
6117 RICHMOND AVENUE, SUITE 200
HOUSTON, TEXAS 77057-6267
(713) 622-0120 PH (713) 622-0557 FAX
TBPE FIRM REGISTRATION #F-4506
WWW.IAHOUSTON.COM

PROFESSIONAL SEAL

STATE OF TEXAS
ANWAR HASSAN
64671
LICENSED
PROFESSIONAL ENGINEER
2024-05-15

ISSUED FOR
ISSUED FOR PROPOSALS AND PERMIT

REVISIONS

No.	DESCRIPTION	DATE

KEY PLAN

TRUE NORTH

SHEET TITLE
FLOOR PLAN LEVEL 1 - HVAC

SCALE 1/8" = 1'-0"
DATE 05/15/2024
PROJECT NUMBER 2319
SHEET NUMBER
M201

GENERAL NOTES:

1. PROVIDE DOUBLE WALL CONSTRUCTION SPIRAL ROUND DUCTWORK IN ALL AREAS WITH EXPOSED CEILINGS. COORDINATE FINISH WITH ARCHITECT.

KEYED NOTE LEGEND

1	ROUTE CONDENSATE TO NEAREST SINK. PROVIDE P–TRAP MODEL J.R. SMITH 9200 OR SIMILAR. PROVIDE CONDENSATE PUMP.
2	PROVIDE RETURN AIR TRANSFER BOOT AND GRILLE AS SHOWN.
3	PROVIDE 16"X16" RETURN AIR OPENING ABOVE CEILING ON WALL GOING TO DECK.
4	PROVIDE 14"X14" RETURN AIR OPENING ABOVE CEILING ON WALL GOING TO DECK.
5	PROVIDE 18"X18"RETURN AIR OPENING ABOVE CEILING ON WALL GOING TO DECK.
6	PROVIDE 18"X18"RETURN AIR DUCT ABOVE CEILING ON WALL GOING TO DECK. CONNECT TO 18"X18" RETURN GRILLE AS SHOWN.
7	PROVIDE 36"X30" RETURN GRILLE AND RETURN AIR OPENING AS SHOWN. LOCATE GRILLE AS HIGH AS POSSIBLE WITHOUT CONFLICT WITH OTHER DICSIPLINES' WORK.
8	ROUTE 14"X8" EXHAUST DUCT THROUGH CHASE TO WEATHER HOOD ON ROOF. SEE 1/MEP102 FOR LOCATION ON ROOF.
9	8" EXHAUST DUCT FROM FIRST FLOOR. SEE 1/M203 FOR CONTINUATION.
10	PROVIDE 16"X16" TRANSFER DUCT WITH BOOT AND GRILLE AS SHOWN. LOCATE GRILLE AS HIGH AS POSSIBLE WITHOUT CONFLICT WITH OTHER DICSIPLINES' WORK.

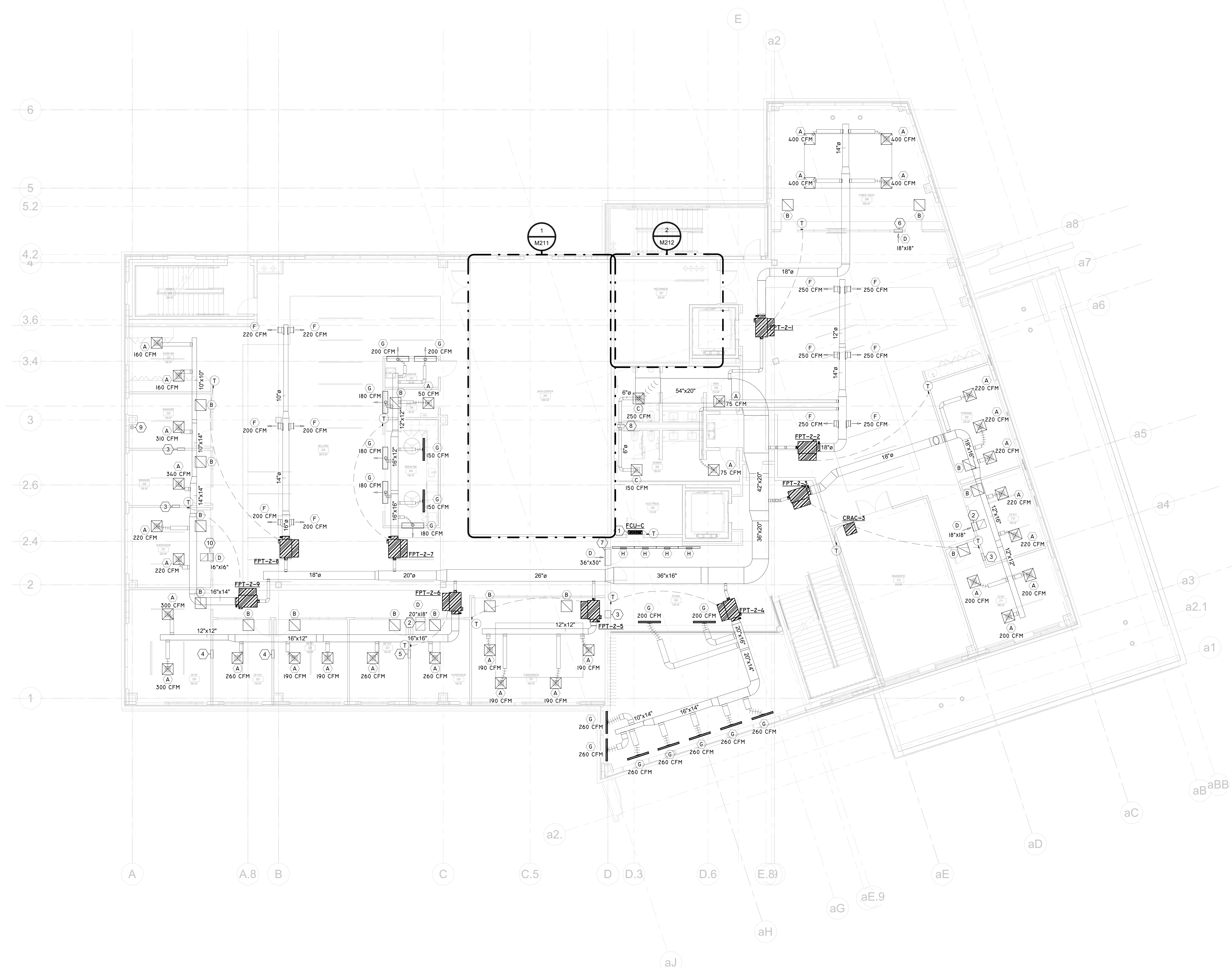

1 M202 LEVEL 2 - FLOOR PLAN - HVAC
SCALE : 1/8" = 1'-0"

FSGROUP ARCHITECTS
13105 Northwest Fwy Suite 1110
Houston Texas 77040
713 344 1752 Office
www.fsdesignbuild.com

PROJECT NAME

INFORMATION TECHNOLGY BUILDING
EUGENE HEIMANN CIRCLE
FORT BEND COUNTY . TEXAS

CONSULTANTS

Infrastructure Associates
INFRASTRUCTURE ASSOCIATES, INC.
6117 RICHMOND AVENUE, SUITE 200
HOUSTON, TEXAS 77057–6267
(713) 622–0120 PH (713) 622–0557 FAX
TBPE FIRM REGISTRATION #F–4506
WWW.IAHOUSTON.COM

PROFESSIONAL SEAL

STATE OF TEXAS
ANWAR HASSAN
64671
LICENSED
PROFESSIONAL ENGINEER
2024-05-15

ISSUED FOR

ISSUED FOR PROPOSALS AND PERMIT

REVISIONS

No.	DESCRIPTION	DATE

KEY PLAN

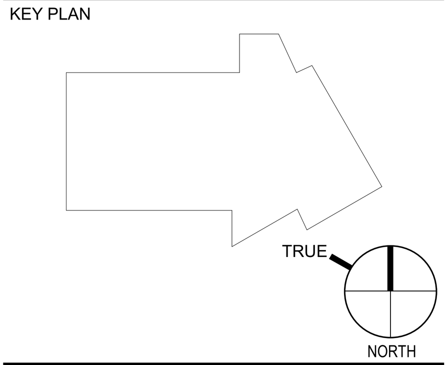

SHEET TITLE

FLOOR PLAN LEVEL 2 - HVAC

SCALE 1/8" = 1'-0"

DATE 05/15/2024

PROJECT NUMBER 2319

SHEET NUMBER

M202

GENERAL NOTES:

1. PROVIDE DOUBLE WALL CONSTRUCTION SPIRAL ROUND DUCTWORK IN ALL AREAS WITH EXPOSED CEILINGS. COORDINATE FINISH WITH ARCHITECT.

KEYED NOTE LEGEND

1	ROUTE CONDENSATE TO NEAREST SINK. PROVIDE P–TRAP MODEL J.R. SMITH 9200 OR SIMILAR. PROVIDE CONDENSATE PUMP.
2	PROVIDE 14"X14" RETURN AIR OPENING ABOVE CEILING ON WALL GOING TO DECK.
3	PROVIDE 16"X16" RETURN AIR OPENING ABOVE CEILING ON WALL GOING TO DECK.
4	PROVIDE 18"X18"RETURN AIR OPENING ABOVE CEILING ON WALL GOING TO DECK.
5	PROVIDE 20"X18" TRANSFER DUCT AND GRILLE AS SHOWN. LOCATE GRILLE AS HIGH AS POSSIBLE WITHOUT CONFLICT WITH OTHER DICSIPLINES' WORK.
6	PROVIDE 52"X24" RETURN GRILLE AND RETURN AIR OPENING AS SHOWN. LOCATE GRILLE AS HIGH AS POSSIBLE WITHOUT CONFLICT WITH OTHER DICSIPLINES' WORK.
7	ROUTE 14"X8" EXHAUST DUCT THROUGH CHASE TO WEATHER HOOD ON ROOF. SEE 1/MEP102 FOR LOCATION ON ROOF.
8	8" EXHAUST DUCT FROM SECOND FLOOR. PROVIDE OFFSET IN THRID FLOOR CEILING SPACE AS SHOWN FOR ROUTING TO ROOF. SEE 1/MEP102 FOR CONTINUATION ON ROOF.

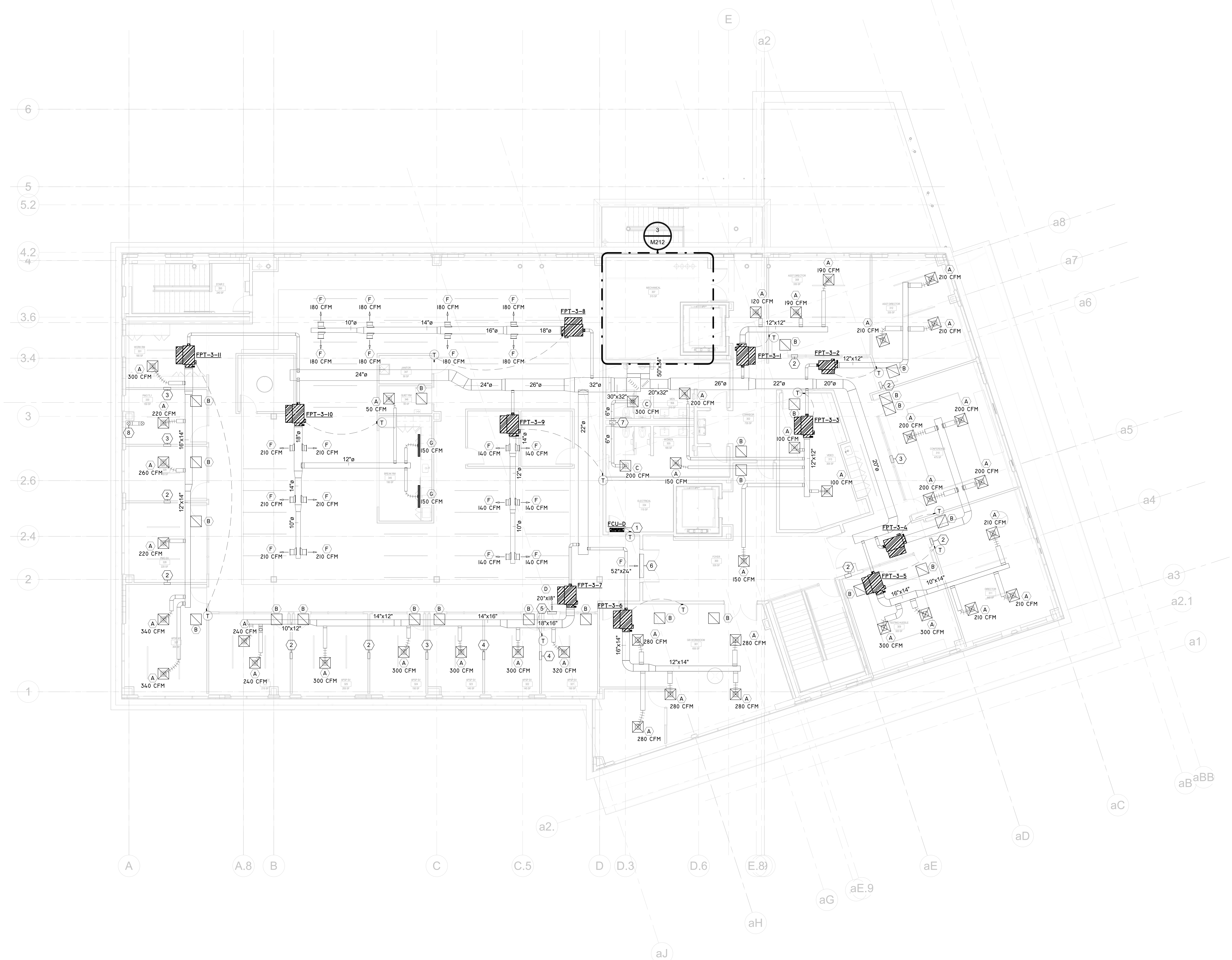

1 M203 LEVEL 3 - FLOOR PLAN - HVAC
SCALE : 1/8" = 1'-0"

FSGROUP® ARCHITECTS
13105 Northwest Fwy Suite 1110
Houston Texas 77040
713 344 1752 Office
www.fsdesignbuild.com

PROJECT NAME

THE STATE OF TEXAS · FORT BEND COUNTY

INFORMATION TECHNOLGY BUILDING
EUGENE HEIMANN CIRCLE
FORT BEND COUNTY . TEXAS

CONSULTANTS

Infrastructure Associates
INFRASTRUCTURE ASSOCIATES, INC.
6117 RICHMOND AVENUE, SUITE 200
HOUSTON, TEXAS 77057–6267
(713) 622–0120 PH (713) 622–0557 FAX
TBPE FIRM REGISTRATION #F–4506
WWW.IAHOUSTON.COM

PROFESSIONAL SEAL
STATE OF TEXAS
ANWAR HASSAN
64671
LICENSED
PROFESSIONAL ENGINEER
2024-05-15

ISSUED FOR
ISSUED FOR PROPOSALS AND PERMIT

REVISIONS

No.	DESCRIPTION	DATE

KEY PLAN

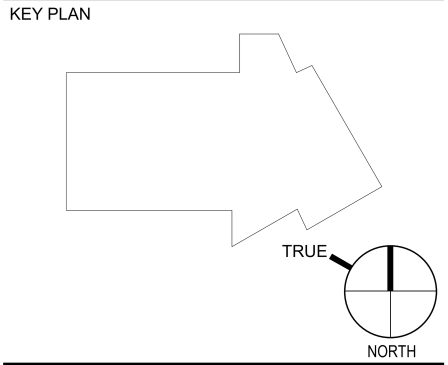

SHEET TITLE
FLOOR PLAN LEVEL 3 - HVAC

SCALE
1/8" = 1'-0"

DATE
05/15/2024

PROJECT NUMBER
2319

SHEET NUMBER
M203

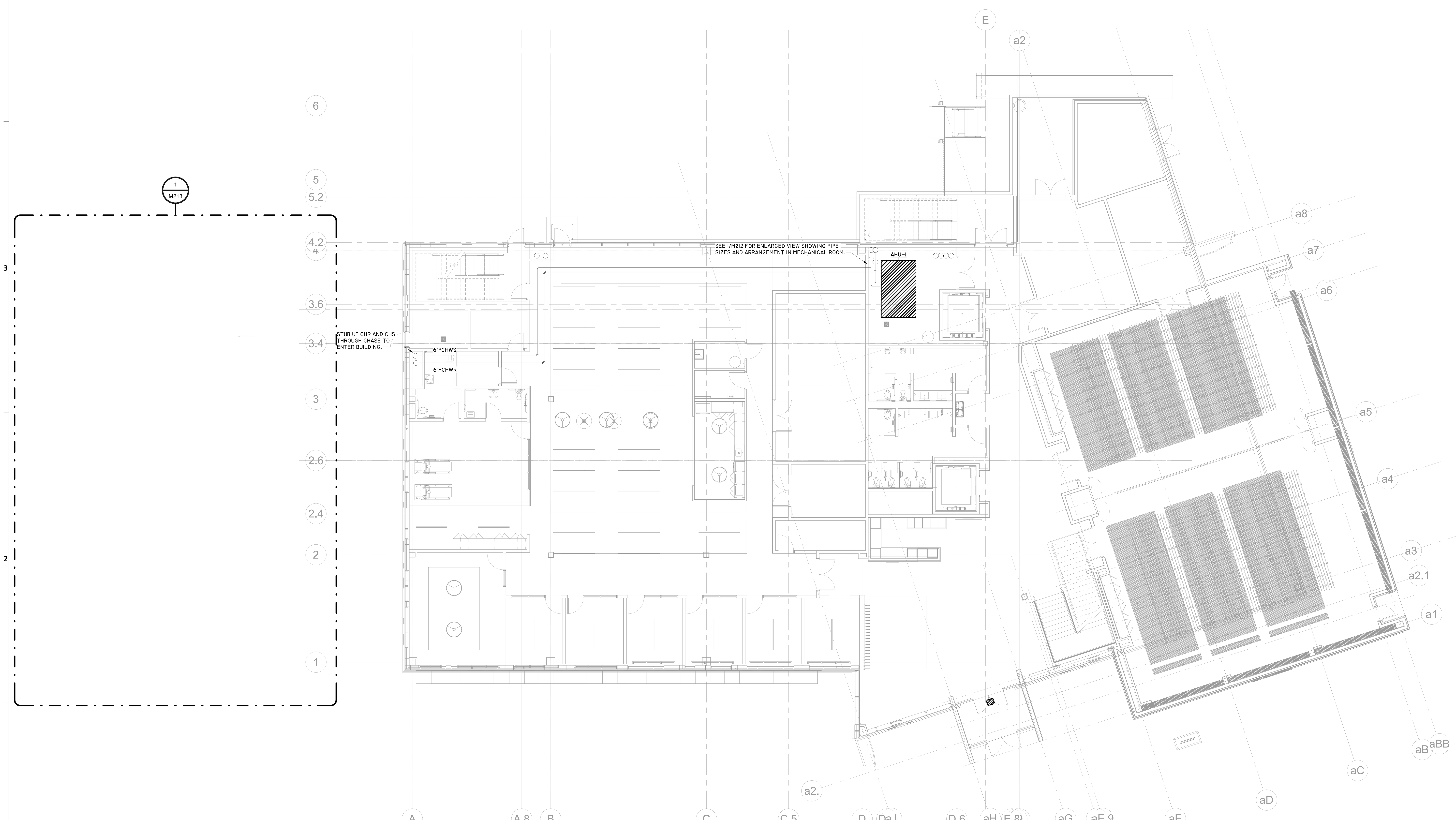

1 M204 **LEVEL 1 - PIPING PLAN - HVAC**
SCALE : 1/8" = 1'-0"

FSGROUP® ARCHITECTS
13105 Northwest Fwy Suite 1110
Houston Texas 77040
713 344 1752 Office
www.fsdesignbuild.com

PROJECT NAME

INFORMATION TECHNOLGY BUILDING
EUGENE HEIMANN CIRCLE
FORT BEND COUNTY . TEXAS

CONSULTANTS

Infrastructure Associates
INFRASTRUCTURE ASSOCIATES, INC.
6117 RICHMOND AVENUE, SUITE 200
HOUSTON, TEXAS 77057-6267
(713) 622-0120 PH (713) 622-0557 FAX
TBPE FIRM REGISTRATION #F-4506
WWW.IAHOUSTON.COM

PROFESSIONAL SEAL

STATE OF TEXAS
ANWAR HASSAN
64671
LICENSED
PROFESSIONAL ENGINEER
2024-05-15

ISSUED FOR
ISSUED FOR PROPOSALS AND PERMIT

REVISIONS

No.	DESCRIPTION	DATE

KEY PLAN

TRUE
NORTH

SHEET TITLE
PIPING PLAN LEVEL 1 - HVAC

SCALE 1/8" = 1'-0"
DATE 05/15/2024
PROJECT NUMBER 2319
SHEET NUMBER
M204

1 M205 LEVEL 2 - PIPING PLAN - HVAC
SCALE : 1/8" = 1'-0"

FSGROUP® ARCHITECTS
13105 Northwest Fwy Suite 1110
Houston Texas 77040
713 344 1752 Office
www.fsdesignbuild.com

PROJECT NAME

THE STATE OF TEXAS FORT BEND COUNTY

INFORMATION TECHNOLGY BUILDING
EUGENE HEIMANN CIRCLE
FORT BEND COUNTY . TEXAS

CONSULTANTS

Infrastructure Associates

INFRASTRUCTURE ASSOCIATES, INC.
6117 RICHMOND AVENUE, SUITE 200
HOUSTON, TEXAS 77057-6267
(713) 622-0120 PH (713) 622-0557 FAX
TBPE FIRM REGISTRATION #F-4506
WWW.IAHOUSTON.COM

PROFESSIONAL SEAL

STATE OF TEXAS
ANWAR HASSAN
64671
LICENSED
PROFESSIONAL ENGINEER
2024-05-15

ISSUED FOR
ISSUED FOR PROPOSALS AND PERMIT

REVISIONS

No.	DESCRIPTION	DATE

KEY PLAN

TRUE NORTH

SHEET TITLE
PIPING PLAN LEVEL 2 - HVAC

SCALE 1/8" = 1'-0"

DATE 05/15/2024

PROJECT NUMBER 2319

SHEET NUMBER
M205

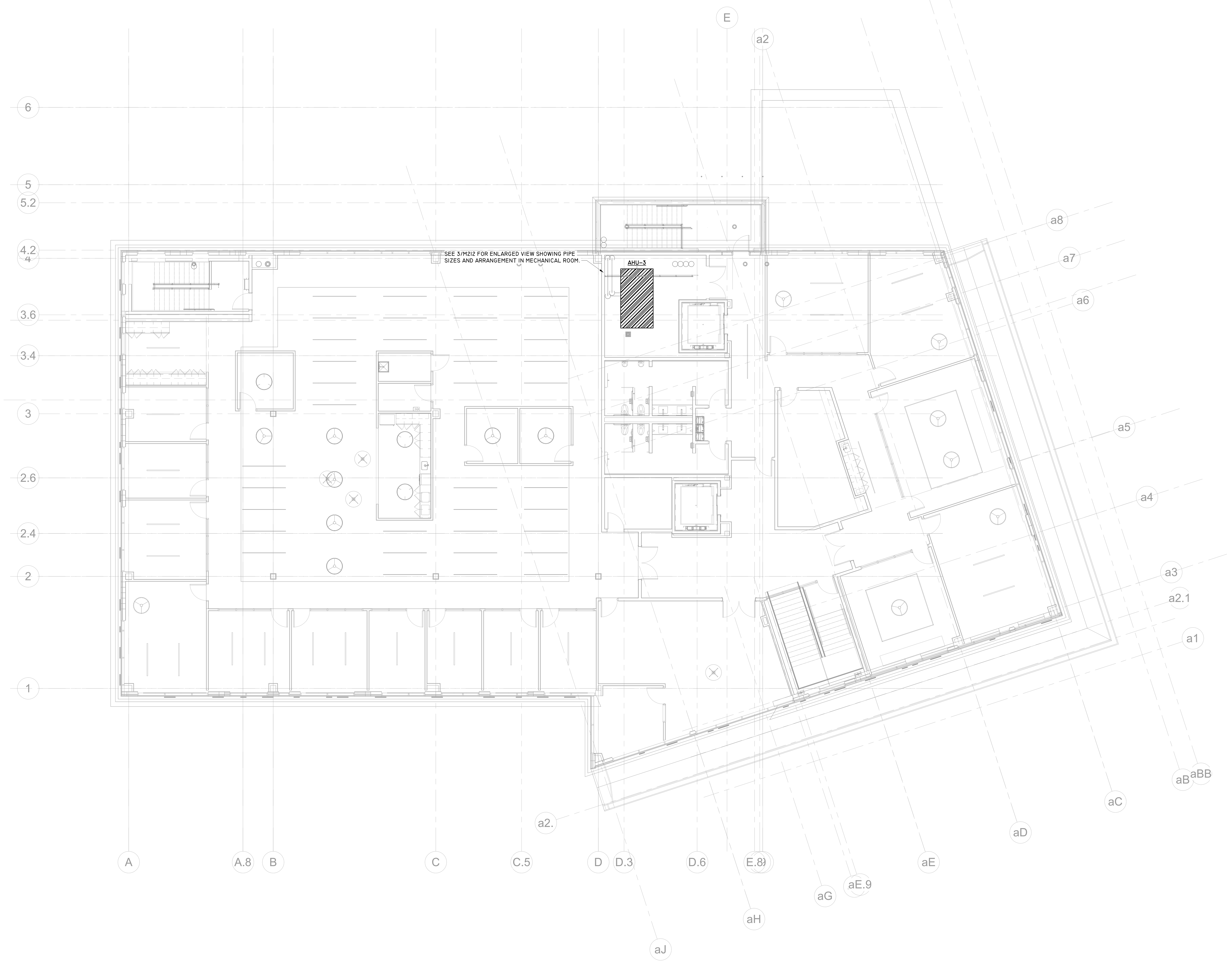

1
M206
LEVEL 3 - PIPING PLAN - HVAC
SCALE : 1/8" = 1'-0"

FSGROUP®
ARCHITECTS
13105 Northwest Fwy Suite 1110
Houston Texas 77040
713 344 1752 Office
www.fsdesignbuild.com

PROJECT NAME

THE STATE OF TEXAS
FORT BEND COUNTY

INFORMATION TECHNOLGY BUILDING
EUGENE HEIMANN CIRCLE
FORT BEND COUNTY . TEXAS

CONSULTANTS

Infrastructure Associates
INFRASTRUCTURE ASSOCIATES, INC.
6117 RICHMOND AVENUE, SUITE 200
HOUSTON, TEXAS 77057-6267
(713) 622-0120 PH (713) 622-0557 FAX
TBPE FIRM REGISTRATION #F-4506
WWW.IAHOUSTON.COM

PROFESSIONAL SEAL

STATE OF TEXAS
ANWAR HASSAN
64671
LICENSED
PROFESSIONAL ENGINEER
2024-05-15

ISSUED FOR
ISSUED FOR PROPOSALS AND PERMIT

REVISIONS

No.	DESCRIPTION	DATE

KEY PLAN

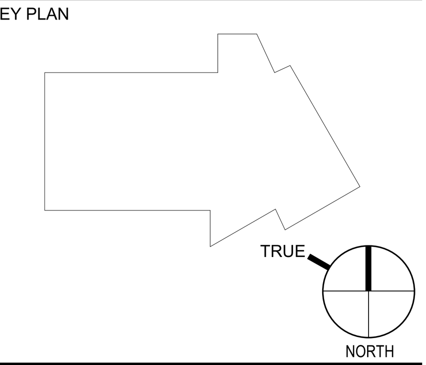

SHEET TITLE
PIPING PLAN LEVEL 3 - HVAC

SCALE
1/8" = 1'-0"

DATE
05/15/2024

PROJECT NUMBER
2319

SHEET NUMBER
M206

KEYED NOTE LEGEND

1	ROUTE CONDENSATE TO FLOOR SINK. PROVIDE 1-INCH AIR GAP.
2	CONNECT CRAC UNIT RETURN TO PLENUM EXTENSION AND TIE IN TO CEILING. MODIFY LAY IN GRID AND SEAL AS REQUIRED.

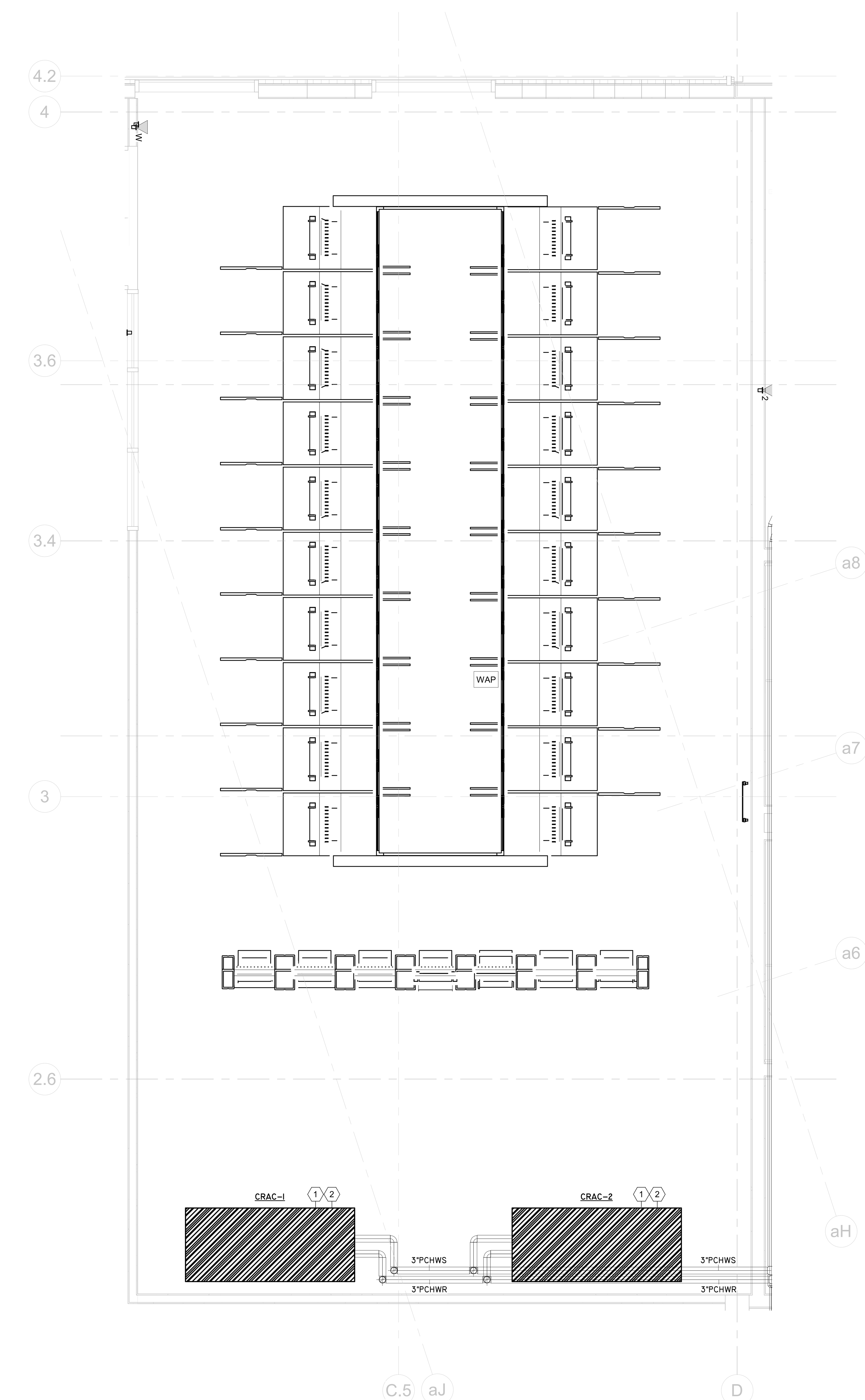

1 ENLARGED FLOOR PLAN - DATA CENTER - HVAC
3/8" = 1'-0"

FSGROUP ARCHITECTS
13105 Northwest Fwy Suite 1110
Houston Texas 77040
713 344 1752 Office
www.fsdesignbuild.com

PROJECT NAME

INFORMATION TECHNOLGY BUILDING
EUGENE HEIMANN CIRCLE
FORT BEND COUNTY , TEXAS

CONSULTANTS

Infrastructure Associates
INFRASTRUCTURE ASSOCIATES, INC.
6117 RICHMOND AVENUE, SUITE 200
HOUSTON, TEXAS 77057-6267
(713) 622-0120 PH (713) 622-0557 FAX
TBPE FIRM REGISTRATION #F-4506
WWW.IAHOUSTON.COM

PROFESSIONAL SEAL

STATE OF TEXAS
ANWAR HASSAN
64671
LICENSED
PROFESSIONAL ENGINEER
2024-05-15

ISSUED FOR

ISSUED FOR PROPOSALS AND PERMIT

REVISIONS

No.	DESCRIPTION	DATE

KEY PLAN

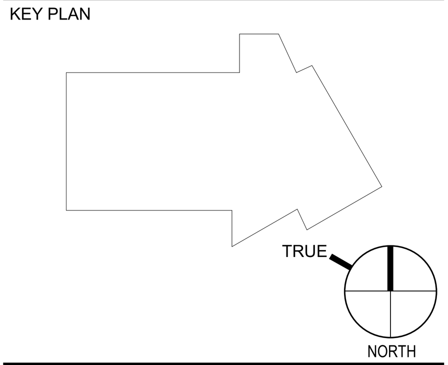

SHEET TITLE

ENLARGED DATA CENTER FLOOR PLAN - HVAC

SCALE 3/8" = 1'-0"

DATE 05/15/2024

PROJECT NUMBER 2319

SHEET NUMBER

M211

GENERAL NOTES:

1. ALL AIR HANDLERS SHALL BE PIPED WITH 3-WAY VALVE (NOT SHOWN). SEE 5/M401 FOR 3-WAY AHU CHILLED WATER COIL PIPING DETAIL.

KEYED NOTE LEGEND	
1	ROUTE CONDENSATE TO FLOOR SINK. PROVIDE 1-INCH AIR GAP.
2	16"X16" DUCT UP FROM SECOND FLOOR MECHANICAL ROOM.
3	6" CHILLED WATER SUPPLY AND RETURN UP TO SECOND FLOOR MECHANICAL ROOM. SEE 2/M212 FOR CONTINUATION.
4	24"X24" OUTSIDE AIR DUCT UP FROM THIRD FLOOR MECHANICAL ROOM. TRANSITION VERTICAL DUCT TO 16"X16" BELOW HORIZONTAL 16"X16" TAP.
5	3" CHILLED WATER SUPPLY AND RETURN UP TO THIRD FLOOR MECHANICAL ROOM. SEE 3/M212 FOR CONTINUATION.
6	24"X24" OUTSIDE AIR DUCT UP TO WEATHER HOOD ON ROOF. SEE 1/MEP102 FOR CONTINUATION.
7	3" CHILLED WATER SUPPLY AND RETURN UP FROM SECOND FLOOR MECHANICAL ROOM. SEE 2/M212 FOR CONTINUATION.
8	TERMINATE DUCT ABOVE CEILING OUTSIDE OF MECHANCAIL ROOM.
9	PROVIDE 60"X26" RETURN GRILLE AND RETURN DUCT AS SHOWN. LOCATE GRILLE AS HIGH AS POSSIBLE WITHOUT CONFLICT WITH OTHER DICSIPLINES' WORK. SEE 1/M201 FOR CONTINUATION.

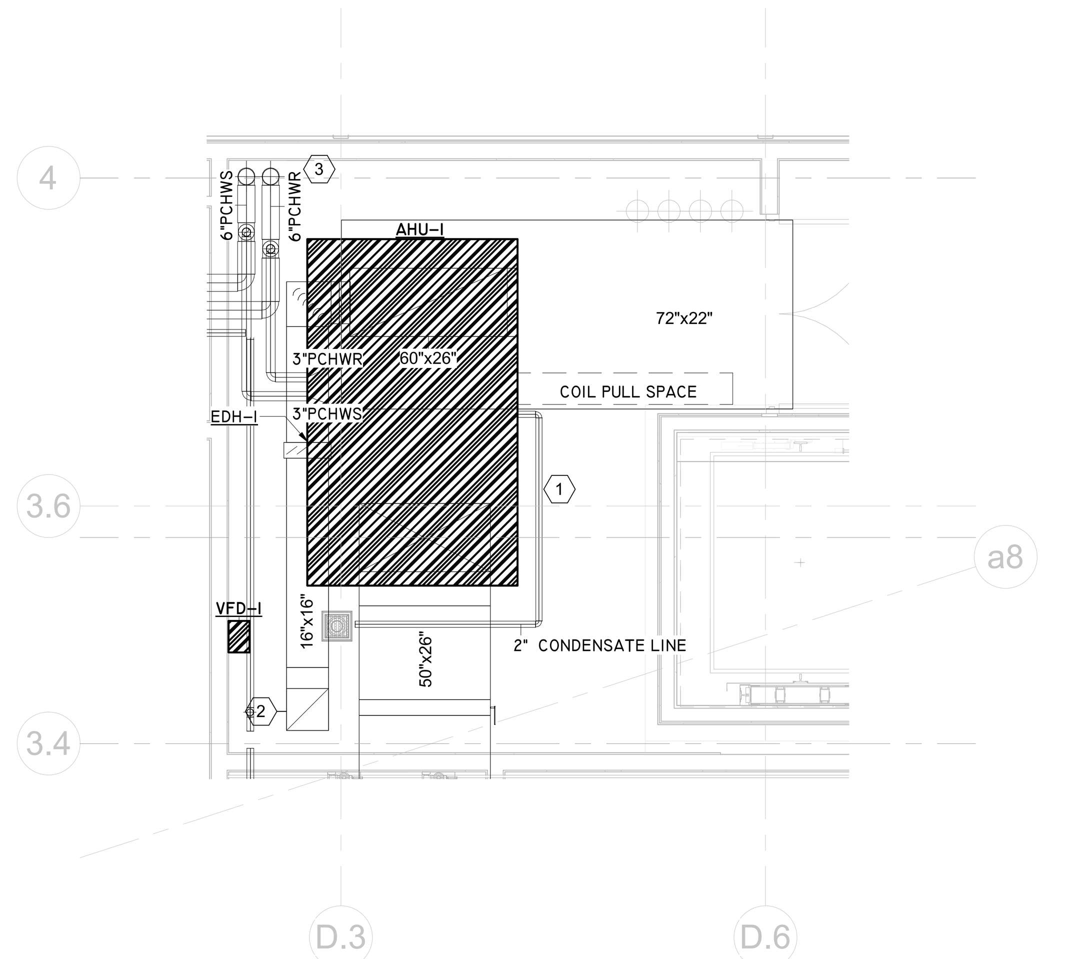

1
M212
LEVEL 1 - ENLARGED MECH ROOM
SCALE : 1/4" = 1'-0"

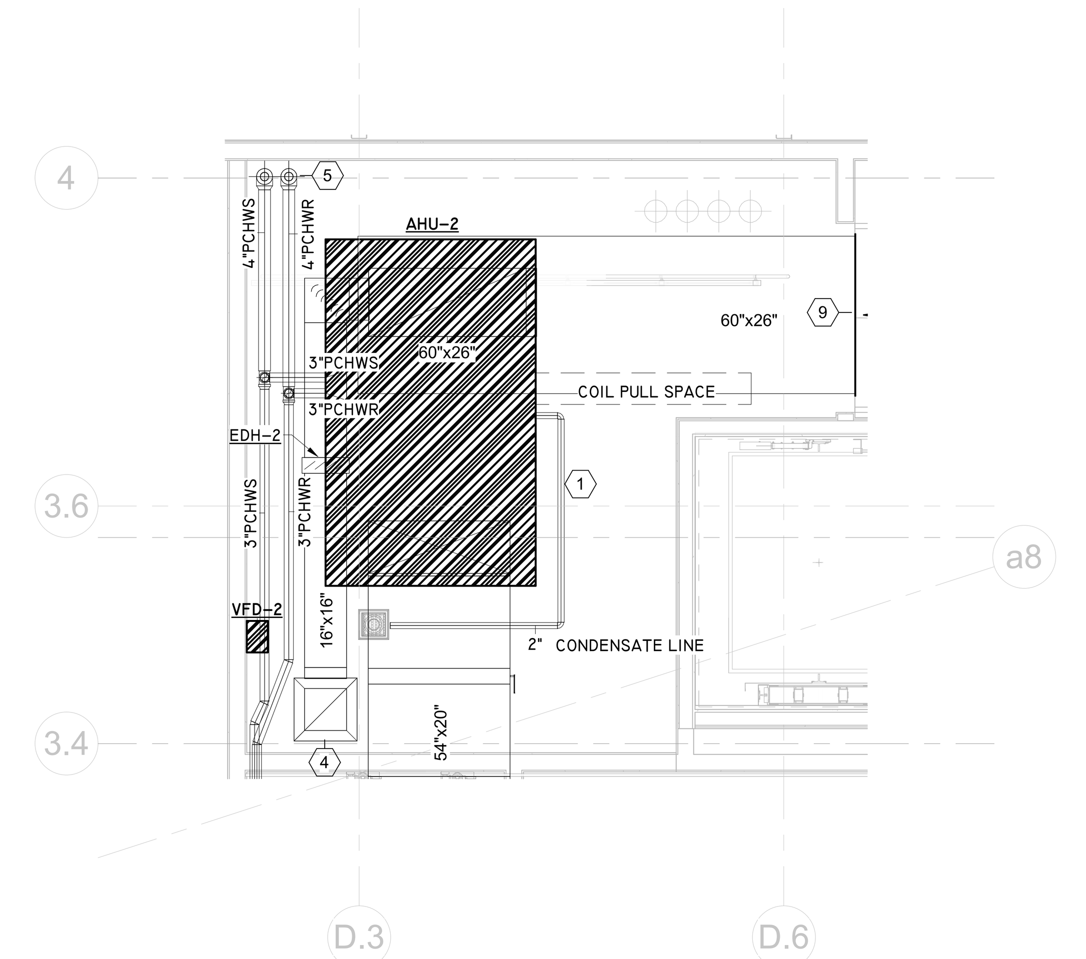

2
M212
LEVEL 2 - ENLARGED MECH ROOM
SCALE : 1/4" = 1'-0"

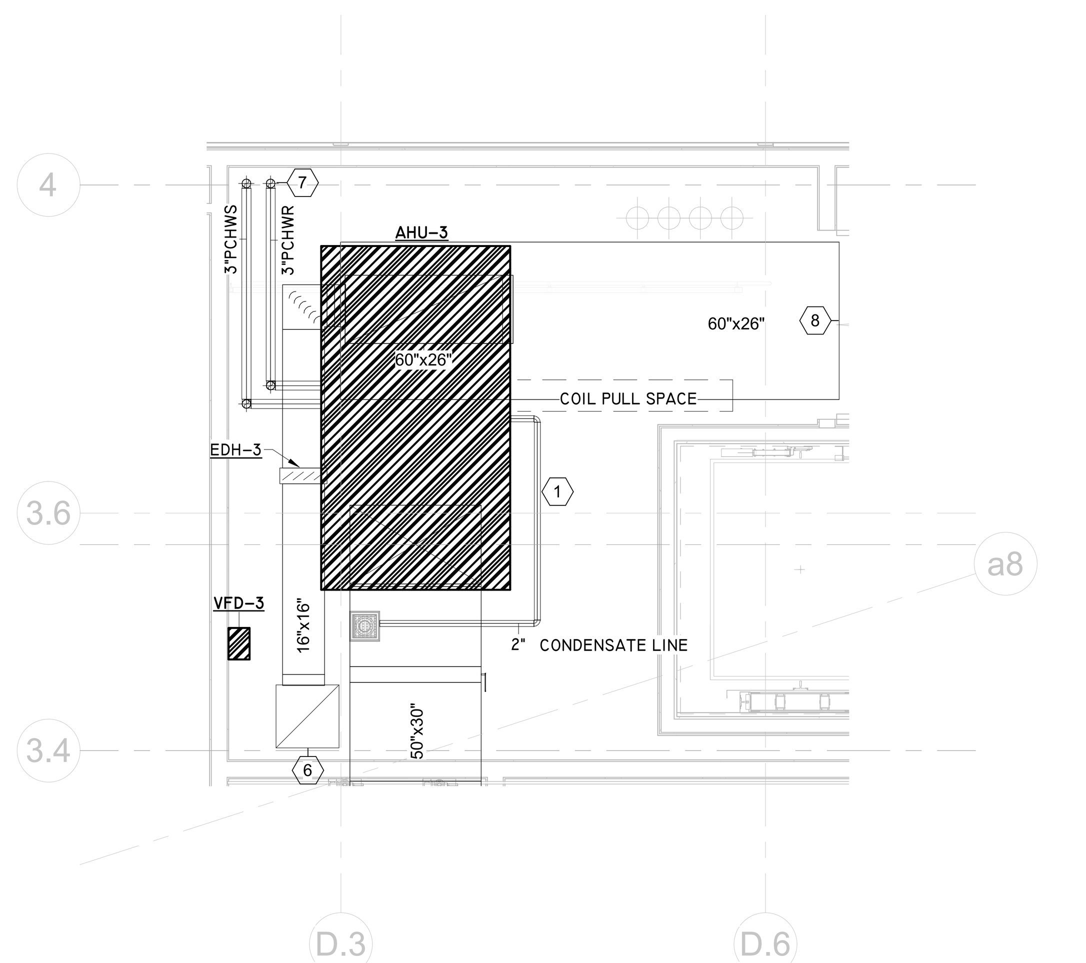

3
M212
LEVEL 3 - ENLARGED MECH ROOM
SCALE : 1/4" = 1'-0"

FSGROUP®
ARCHITECTS
13105 Northwest Fwy Suite 1110
Houston Texas 77040
713 344 1752 Office
www.fsdesignbuild.com

PROJECT NAME

INFORMATION TECHNOLGY BUILDING
EUGENE HEIMANN CIRCLE
FORT BEND COUNTY . TEXAS

CONSULTANTS

Infrastructure Associates
INFRASTRUCTURE ASSOCIATES, INC.
6117 RICHMOND AVENUE, SUITE 200
HOUSTON, TEXAS 77057-6267
(713) 622-0120 PH (713) 622-0557 FAX
TBPE FIRM REGISTRATION #F-4506
WWW.IAHOUSTON.COM

PROFESSIONAL SEAL

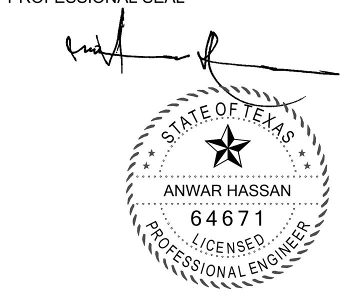

2024-05-15

ISSUED FOR
ISSUED FOR PROPOSALS AND PERMIT

REVISIONS

No.	DESCRIPTION	DATE

KEY PLAN

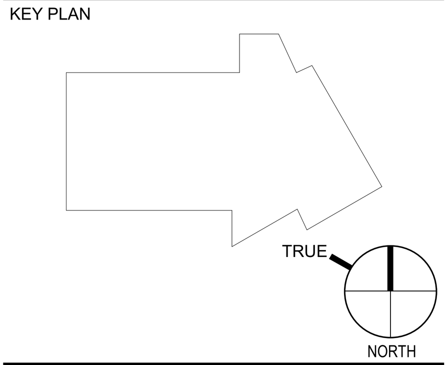

SHEET TITLE
ENLARGED MECHANICAL ROOMS - HVAC

SCALE
1/4" = 1'-0"

DATE
05/15/2024

PROJECT NUMBER
2319

SHEET NUMBER
M212

GENERAL NOTES:

1. SEE 1/M501 FOR PIPING SCHEMATIC.
2. SEE 12/M401 FOR AIR COOLED CHILLER PIPING DETAIL.
3. SEE 1/M401 FOR EXPANSION TANK AND AIR SEPARATOR DETAIL.
4. SEE 6/M401 FOR END-SUCTION PUMP PIPING DETAIL.

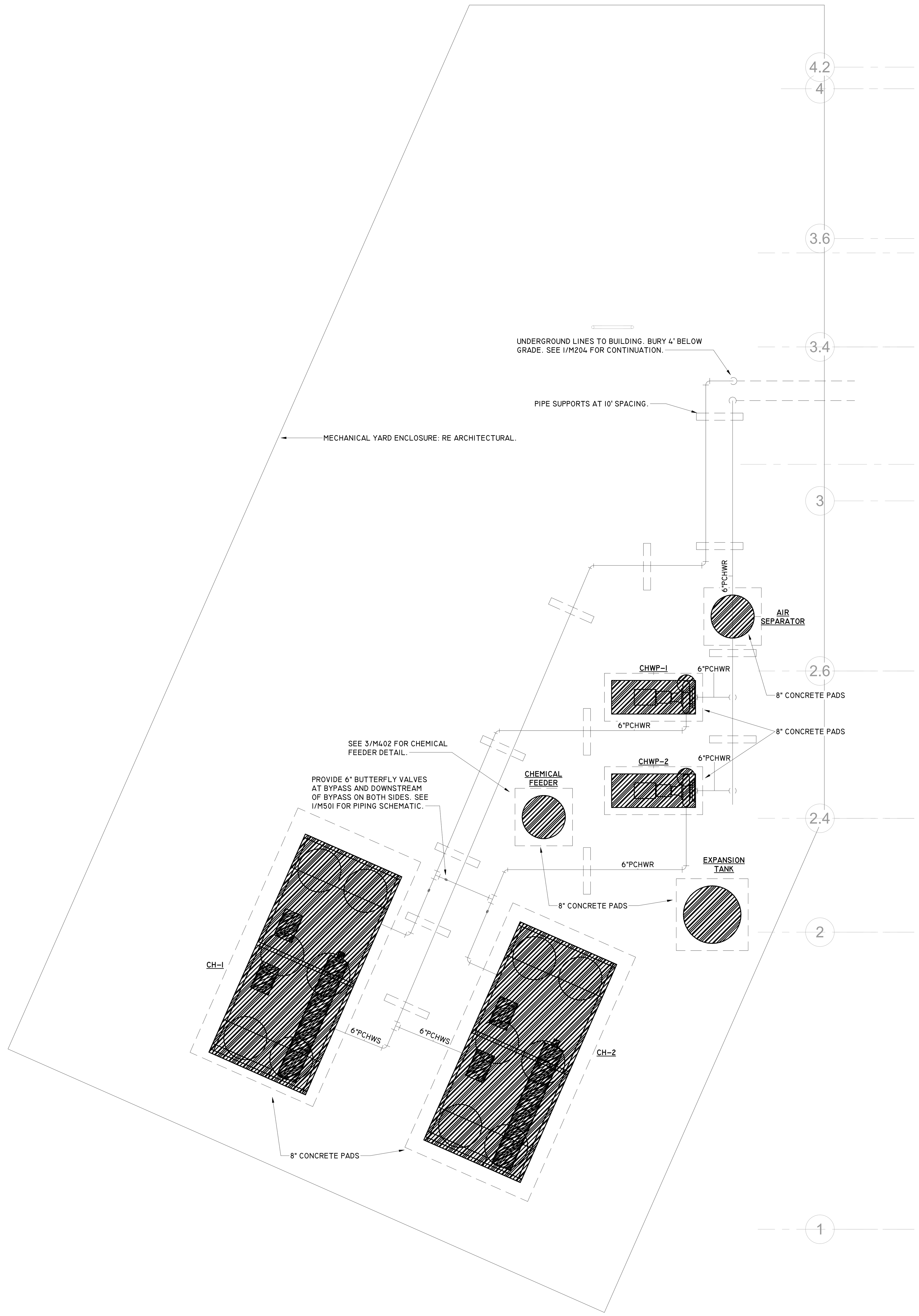

1 M213 ENLARGED MECHANICAL YARD
SCALE : 1/4" = 1'-0"

FSGROUP® ARCHITECTS
13105 Northwest Fwy Suite 1110
Houston Texas 77040
713 344 1752 Office
www.fsdesignbuild.com

PROJECT NAME

THE STATE OF TEXAS FORT BEND COUNTY

INFORMATION TECHNOLGY BUILDING
EUGENE HEIMANN CIRCLE
FORT BEND COUNTY . TEXAS

CONSULTANTS

Infrastructure Associates

INFRASTRUCTURE ASSOCIATES, INC.
6117 RICHMOND AVENUE, SUITE 200
HOUSTON, TEXAS 77057-6267
(713) 622-0120 PH (713) 622-0557 FAX
TBPE FIRM REGISTRATION #F-4506
WWW.IAHOUSTON.COM

PROFESSIONAL SEAL

STATE OF TEXAS
ANWAR HASSAN
64671
LICENSED
PROFESSIONAL ENGINEER
2024-05-15

ISSUED FOR
ISSUED FOR PROPOSALS AND PERMIT

REVISIONS

No.	DESCRIPTION	DATE

KEY PLAN

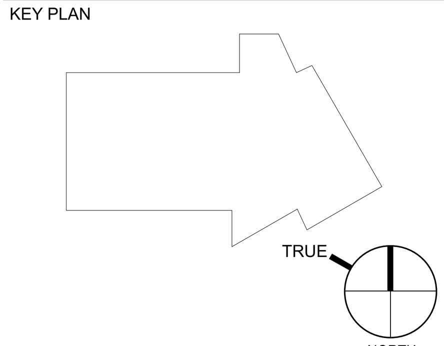

SHEET TITLE
ENLARGED MECHANICAL YARD - HVAC

SCALE 1/4" = 1'-0"

DATE 05/15/2024

PROJECT NUMBER 2319

SHEET NUMBER
M213

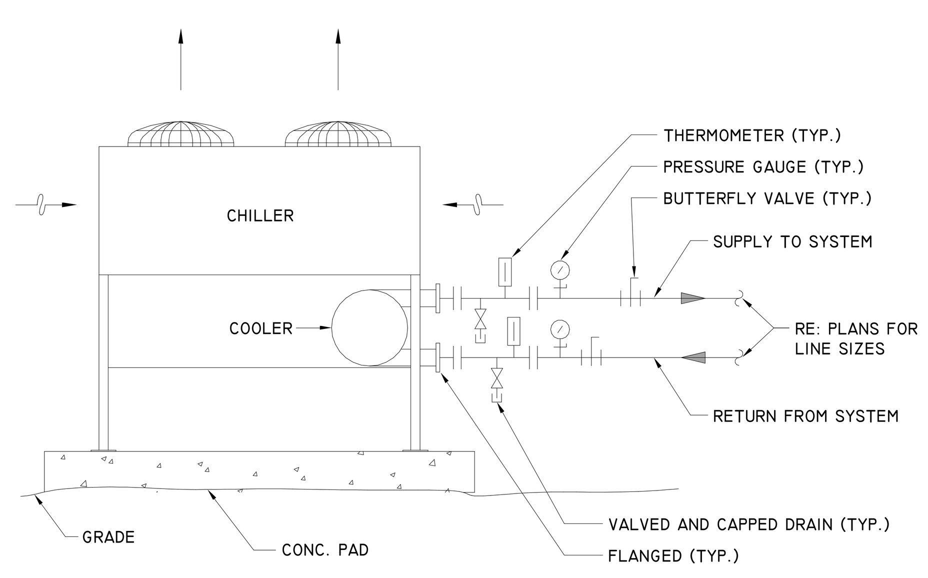

AIR COOLED CHILLER PIPING DETAIL (TYPICAL) — NOT TO SCALE — 12

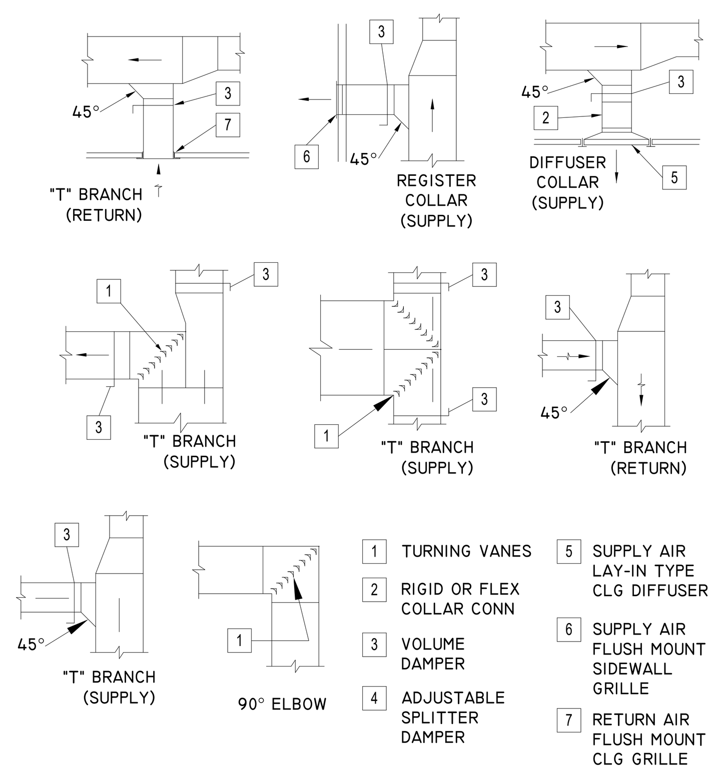

NOTE: SEE FLOOR PLANS FOR DIMENSIONS

DUCTWORK FITTINGS DETAIL — NOT TO SCALE — 9

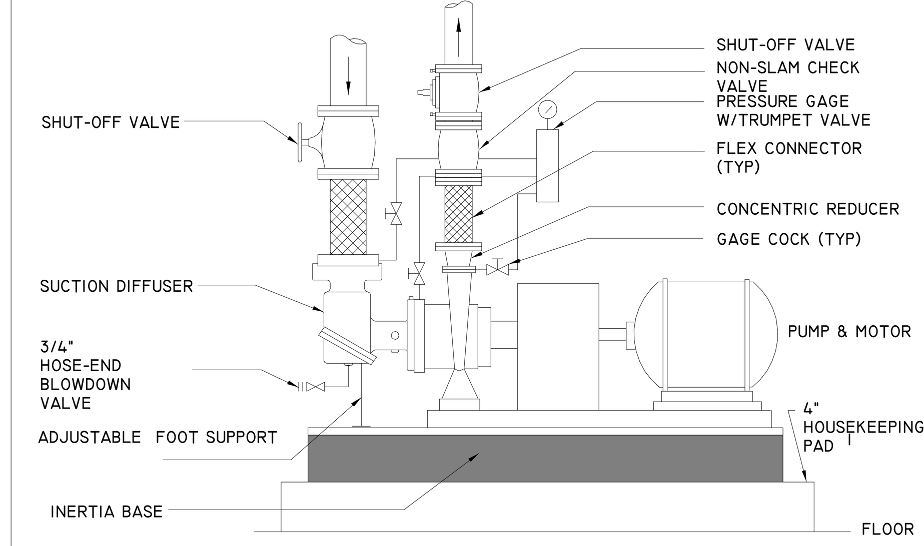

END-SUCTION PUMP PIPING DETAIL — NOT TO SCALE — 6

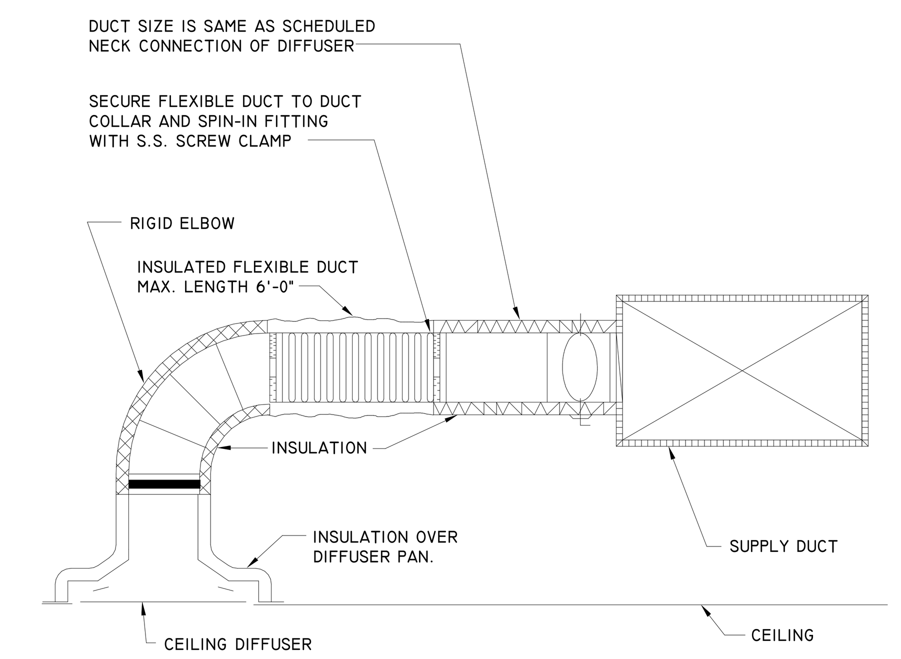

NOTE:
THE FLANGED BELLMOUTH FITTING MUST BE PROVIDED, WHERE HEIGHT OF DUCT SHOWN ON PLANS CAN ACCOMODATE THE FITTING. ONLY WHERE THE DUCT HEIGHT DOES NOT ALLOW THE INSTALLATION OF BELLMOUTH FITTING, PROVIDE STRAIGHT FITTING. FLEX DUCT MAY BE LOCATED IN RISER OR HORIZONTAL RUN.

CEILING DIFFUSER CONNECTION DETAIL — NOT TO SCALE — 3

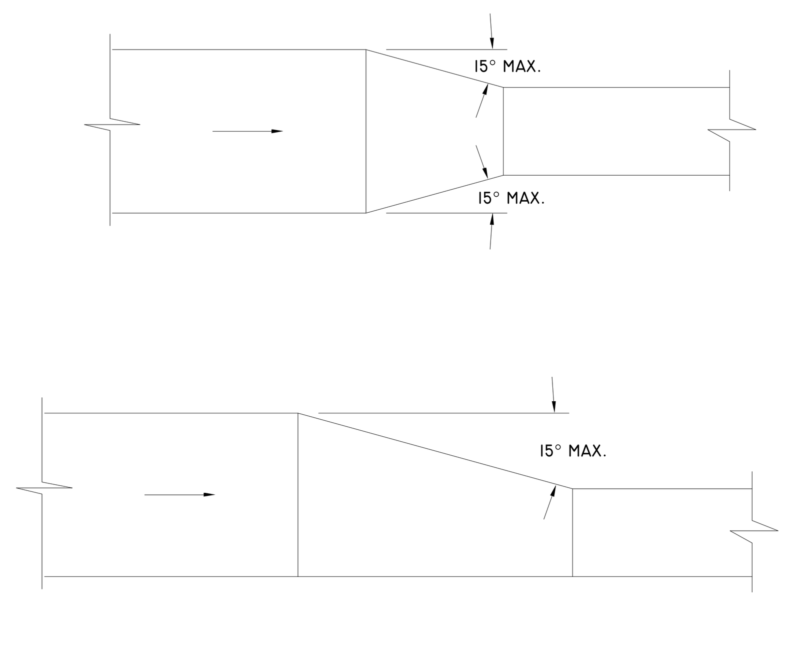

DUCT TRANSITION DETAIL — NOT TO SCALE — 11

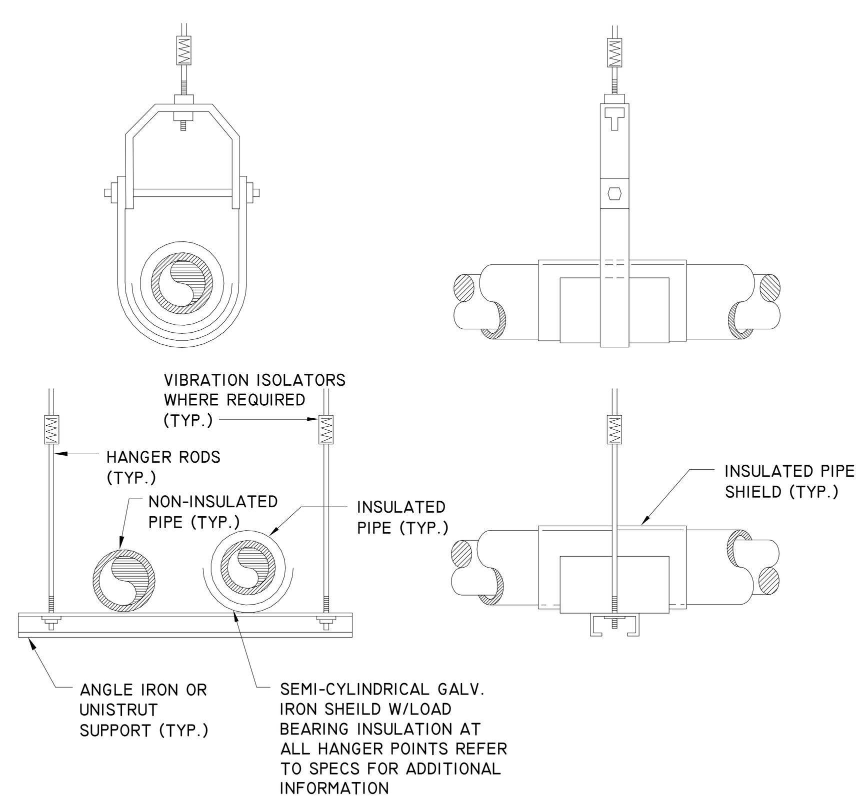

PIPE HANGER DETAIL — NOT TO SCALE — 8

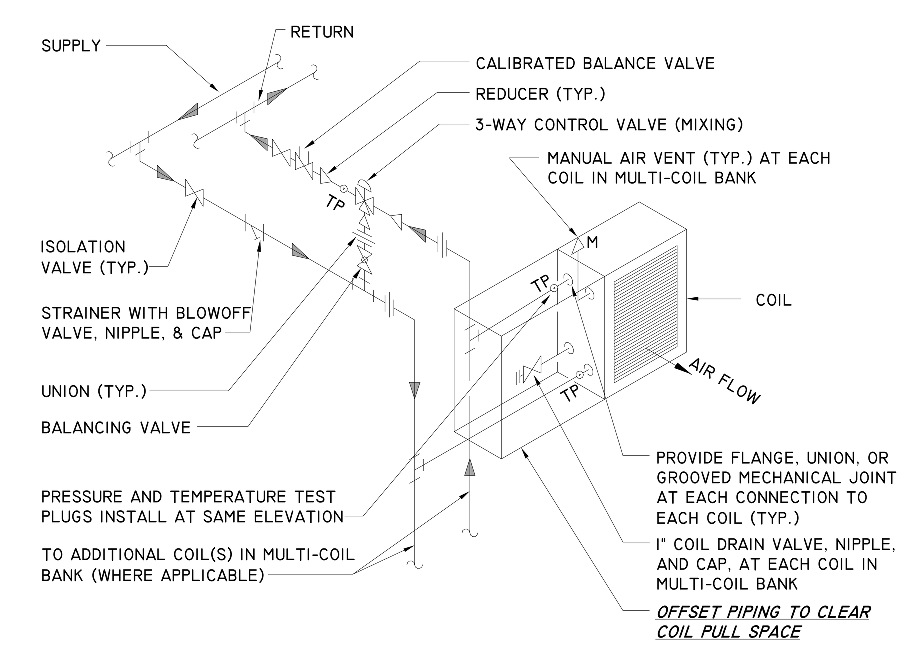

NOTES:

1. SHUT-OFF VALVE SHALL BE BUTTERFLY TYPE FOR 2-1/2" AND LARGER AND BALL VALVE FOR 2" AND SMALLER.
2. PROVIDE BALANCING METER FOR COIL WITH 50 GPM OR LARGER FLOW.
3. PROVIDE DRAIN LINE FOR STRAINER VALVE.
4. CONFIRM T&P PLUGS LOCATIONS WITH TAB CONTRACTOR BEFORE INSTALLATION.

3-WAY AHU CHILLED WATER COIL PIPING DETAIL — NOT TO SCALE — 5

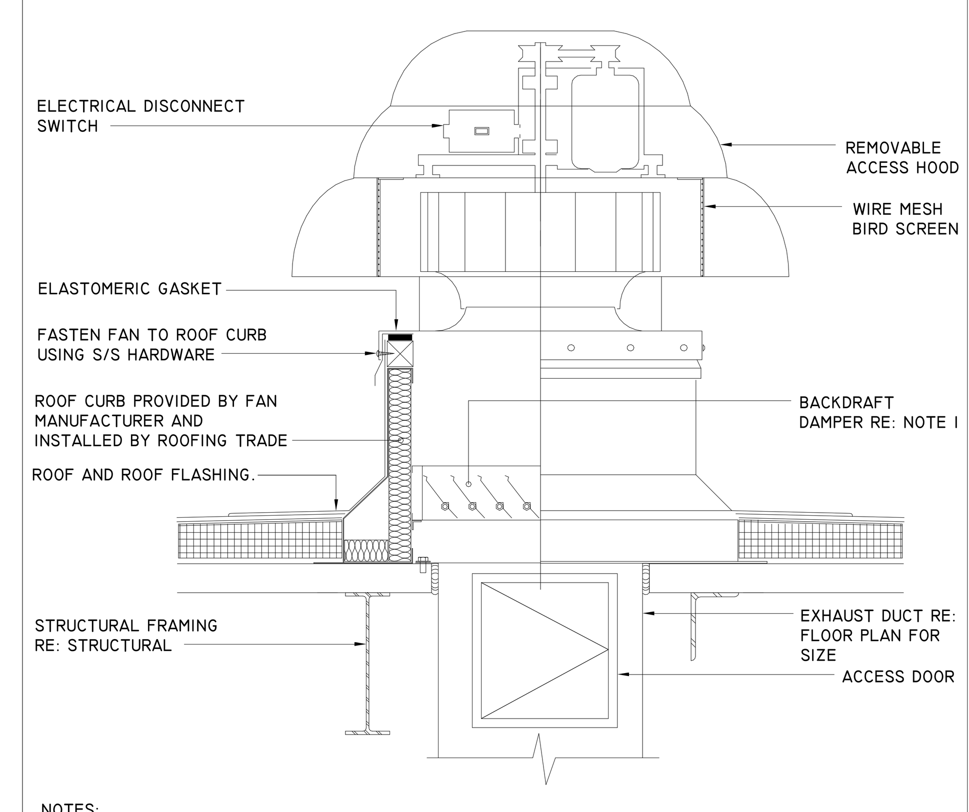

NOTES:
1. DAMPER FURNISHED BY FAN MANUFACTURER AND INSTALLED BY MECHANICAL TRADE.

ROOF EXHAUST FAN DETAIL — NOT TO SCALE — 2

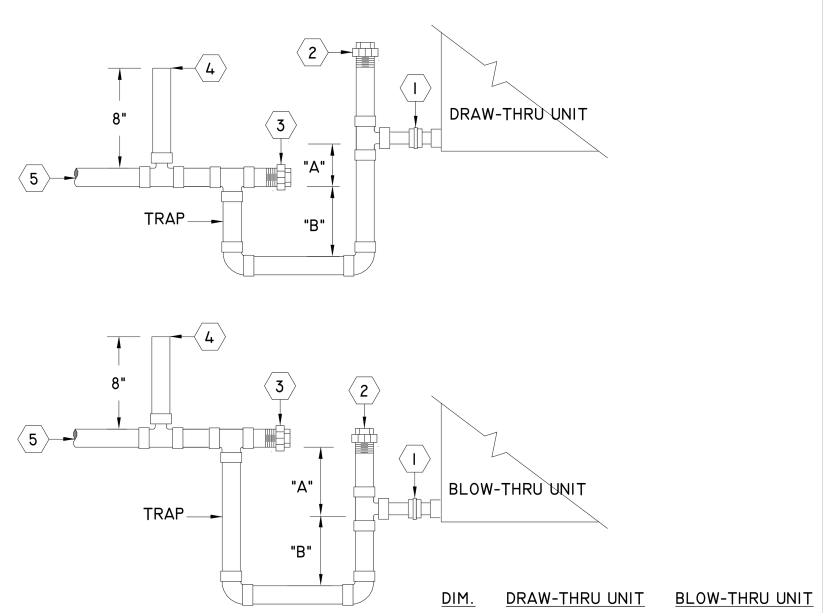

DIM.	DRAW-THRU UNIT	BLOW-THRU UNIT
"A"	FAN T.S.P. + 1"	FAN T.S.P. - 1"
"B"	FAN T.S.P./2 + 1"	FAN T.S.P./2 + 1"

KEYED NOTES:

1. SIZE DRAIN PIPING AT LEAST ONE PIPE SIZE LARGER THAN DRAIN PAN CONNECTION. PROVIDE UNION AT UNIT CONNECTION.
2. UPSTREAM CLEANOUT WITH REMOVABLE CAP OR PLUG. EXTEND ABOVE TOP RIM OF DRAIN PAN.
3. DOWNSTREAM PLUGGED CLEANOUT AT HEAD END OF DRAIN.
4. OPEN VENT - DO NOT CAP.
5. ROUTE DISCHARGE TO INDIRECT DRAIN. PITCH DOWN AT 1/8" PER FOOT. PROVIDE CLEANOUTS AT CHANGES OF DIRECTION.

TYPICAL CONDENSATE DRAIN DETAIL — NOT TO SCALE — 10

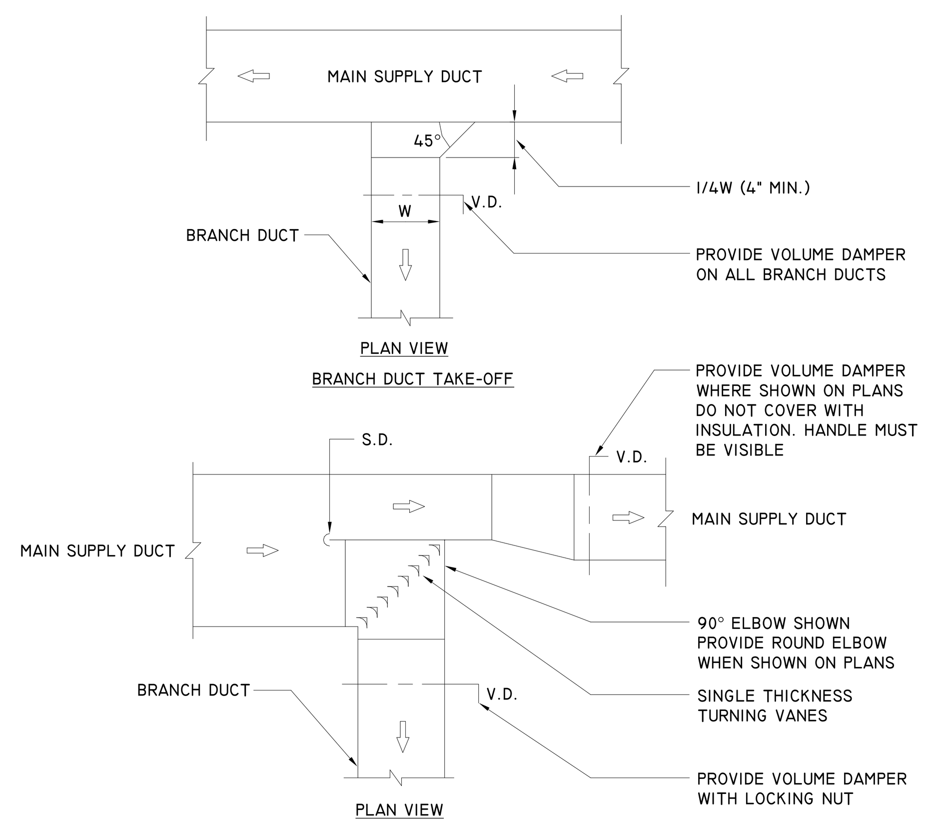

BRANCH DUCT DETAIL — NOT TO SCALE — 7

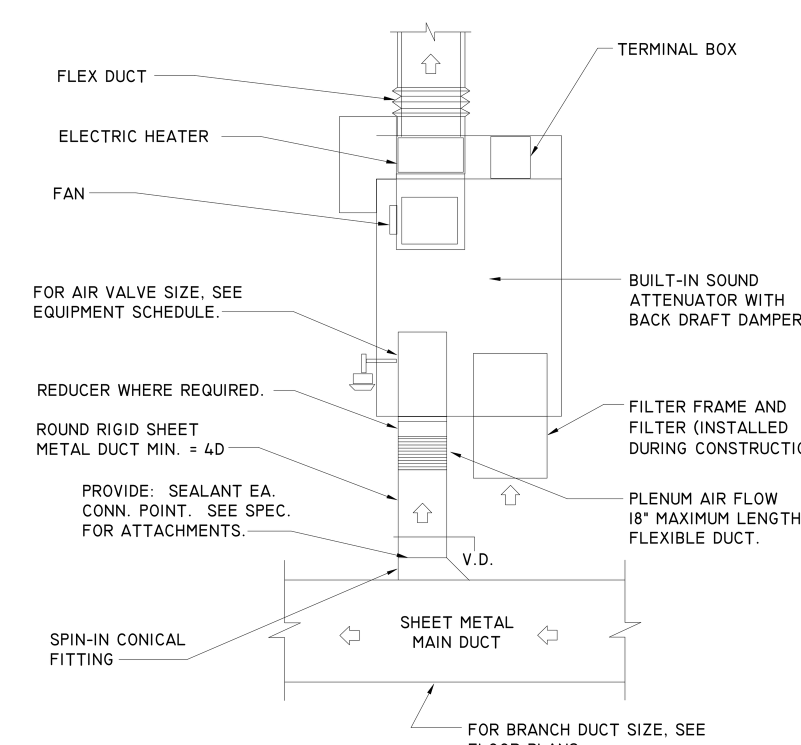

FAN POWERED VAV UNIT DETAIL — NOT TO SCALE — 4

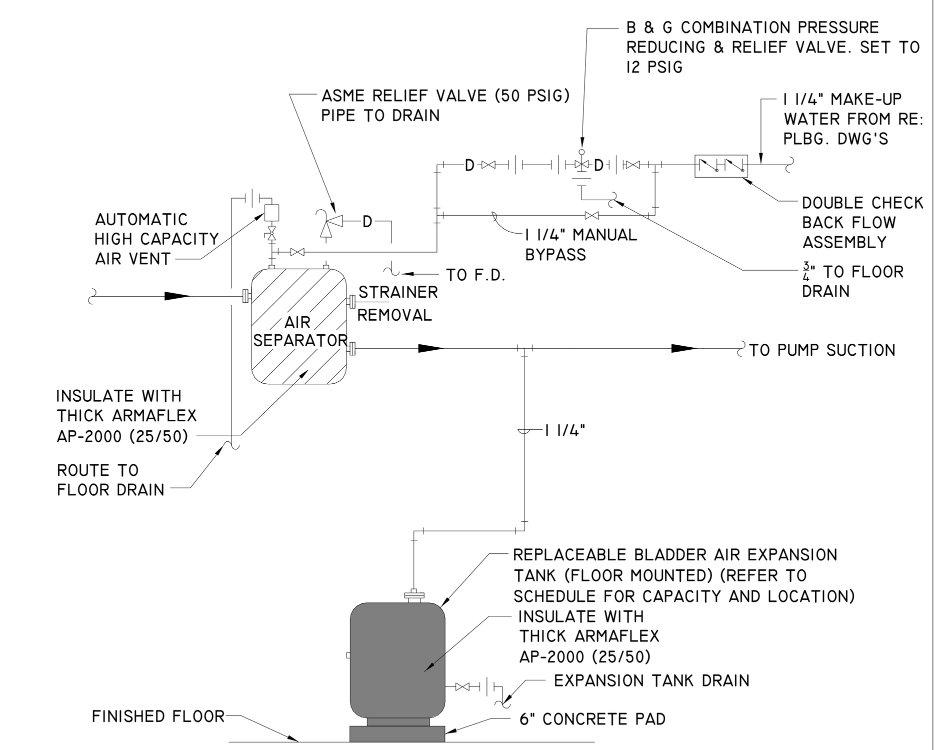

NOTE :
1. AIR SEPARATOR SHALL BE SUSPENDED FROM STRUCTURE.

EXPANSION TANK AND AIR SEPARATOR DETAIL — NOT TO SCALE — 1

FSGROUP® ARCHITECTS
13105 Northwest Fwy Suite 1110
Houston Texas 77040
713 344 1752 Office
www.fsdesignbuild.com

PROJECT NAME

THE STATE OF TEXAS — FORT BEND COUNTY

INFORMATION TECHNOLGY BUILDING
EUGENE HEIMANN CIRCLE
FORT BEND COUNTY , TEXAS

CONSULTANTS

Infrastructure Associates
INFRASTRUCTURE ASSOCIATES, INC.
6117 RICHMOND AVENUE, SUITE 200
HOUSTON, TEXAS 77057-6267
(713) 622-0120 PH (713) 622-0557 FAX
TBPE FIRM REGISTRATION #F-4506
WWW.IAHOUSTON.COM

PROFESSIONAL SEAL

STATE OF TEXAS
ANWAR HASSAN
64671
LICENSED
PROFESSIONAL ENGINEER
2024-05-15

ISSUED FOR
ISSUED FOR PROPOSALS AND PERMIT

REVISIONS

No.	DESCRIPTION	DATE

KEY PLAN

TRUE
NORTH

SHEET TITLE
DETAILS

SCALE

DATE
05/15/2024

PROJECT NUMBER
2319

SHEET NUMBER
M401

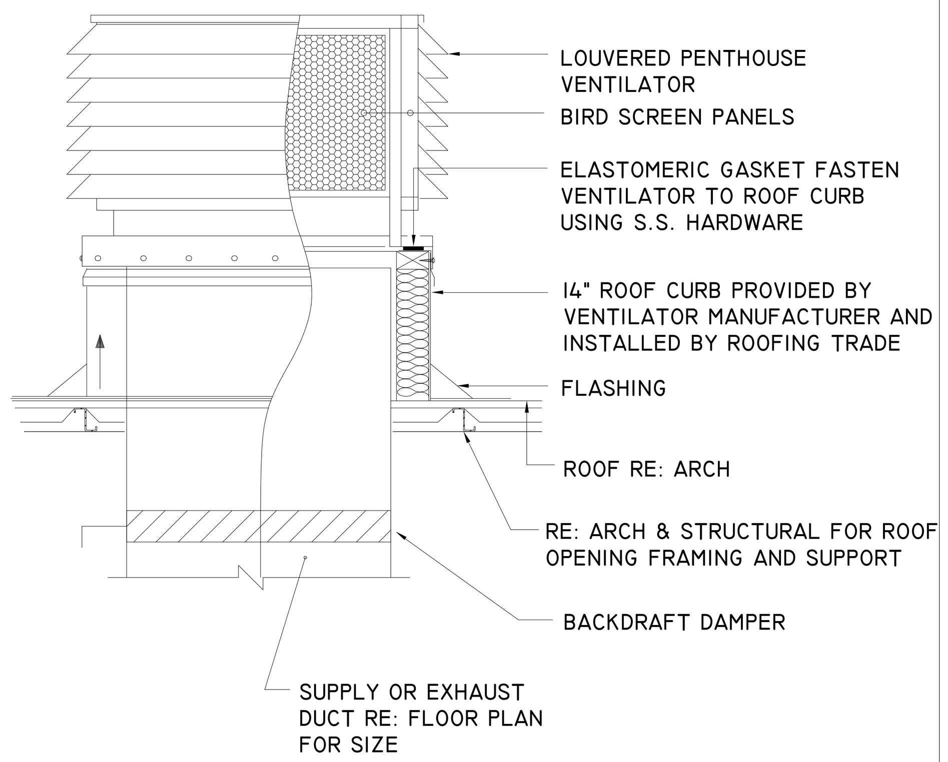

LOUVERED PENTHOUSE VENTILATOR DETAIL — NOT TO SCALE — 4

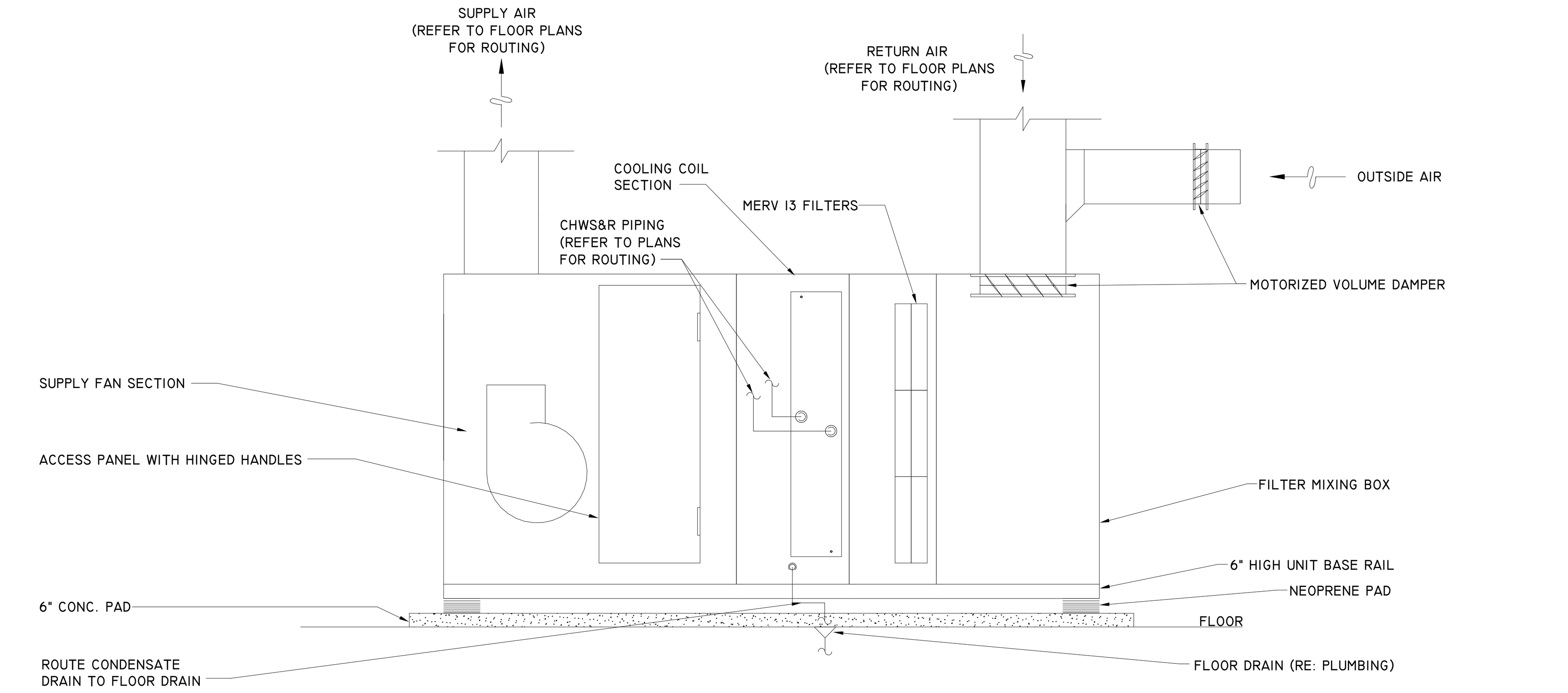

NOTES:

1. PROVIDE IONIZATION TYPE SMOKE DETECTORS AS REQUIRED IN DUCT.
2. REFER TO ENLARGED MECHANICAL PLANS FOR DUCT AND PIPE ROUTING

TYPICAL CHILLED WATER VAV AHU DETAIL — NOT TO SCALE — 2

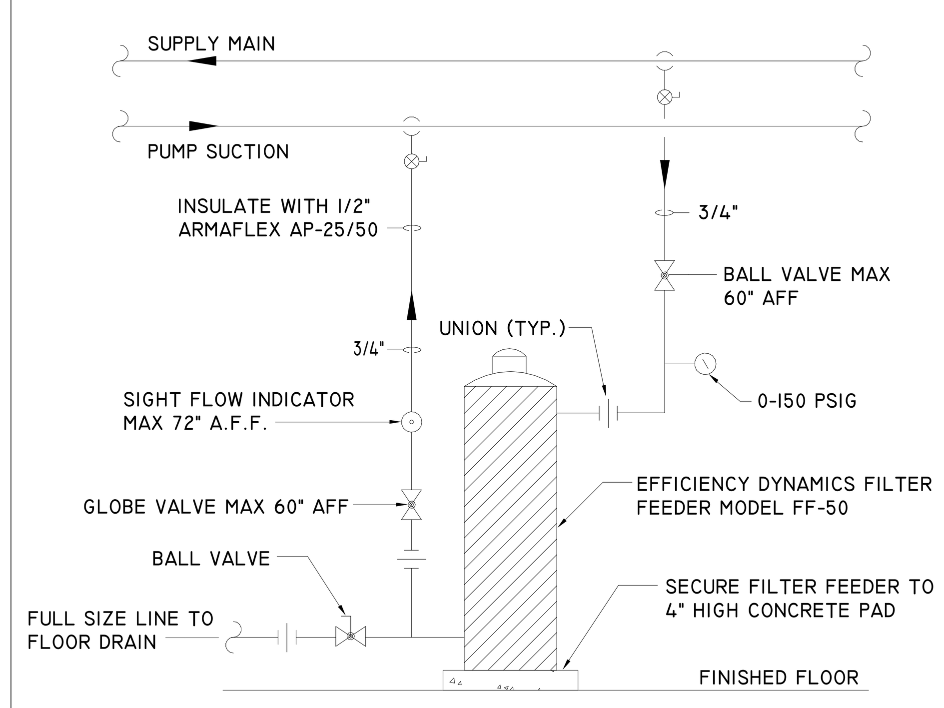

NOTE: INSULATE FILTER FEEDER WITH ALL ASSOCIATED PIPING WITH 1/2" ARMAFLEX AP-25/50

CHEMICAL FEEDER DETAIL — NOT TO SCALE — 3

NOTES:
1. SIZE REFRIGERANT PIPING PER MANUFACTURER INSTRUCTIONS.

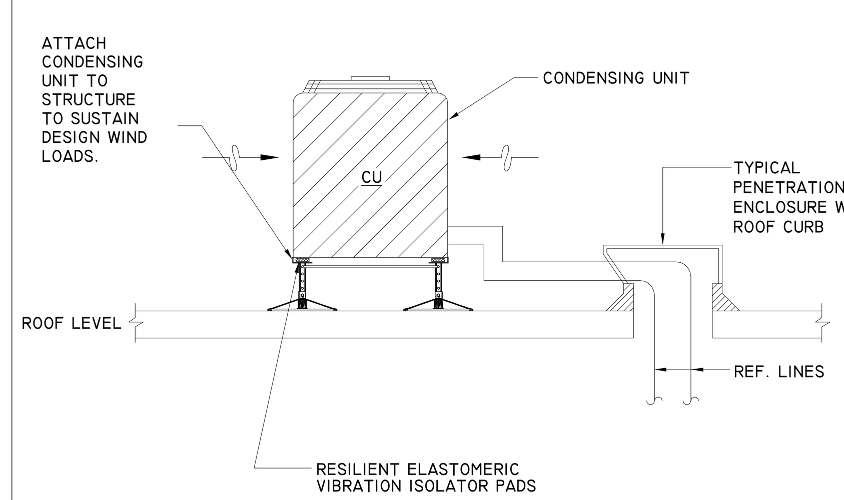

ROOF MOUNTED CONDENSER DETAIL
SCALE: N.T.S.

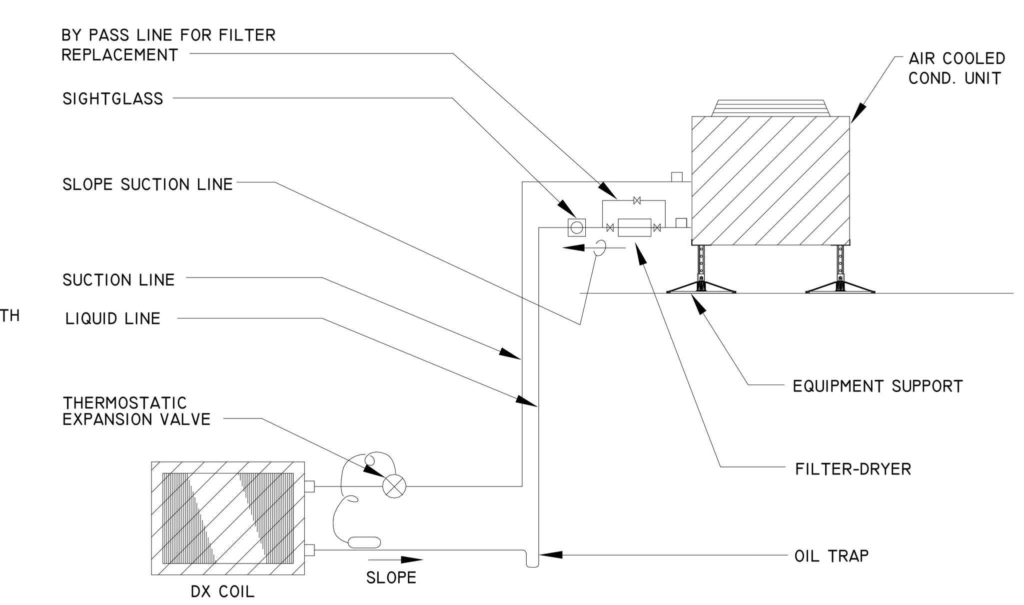

REFRIGERANT PIPING DETAIL (A)
SCALE: N.T.S.

SPLIT SYSTEM INSTALLATION AND PIPING DETAIL — NOT TO SCALE — 1

FSGROUP® ARCHITECTS
13105 Northwest Fwy Suite 1110
Houston Texas 77040
713 344 1752 Office
www.fsdesignbuild.com

PROJECT NAME

THE STATE OF TEXAS — FORT BEND COUNTY

INFORMATION TECHNOLGY BUILDING
EUGENE HEIMANN CIRCLE
FORT BEND COUNTY . TEXAS

CONSULTANTS

Infrastructure Associates

INFRASTRUCTURE ASSOCIATES, INC.
6117 RICHMOND AVENUE, SUITE 200
HOUSTON, TEXAS 77057-6267
(713) 622-0120 PH (713) 622-0557 FAX
TBPE FIRM REGISTRATION #F-4506
WWW.IAHOUSTON.COM

PROFESSIONAL SEAL

STATE OF TEXAS
ANWAR HASSAN
64671
LICENSED
PROFESSIONAL ENGINEER
2024-05-15

ISSUED FOR

ISSUED FOR PROPOSALS AND PERMIT

REVISIONS

No.	DESCRIPTION	DATE

KEY PLAN

TRUE
NORTH

SHEET TITLE

DETAILS

SCALE

DATE
05/15/2024

PROJECT NUMBER
2319

SHEET NUMBER

M402

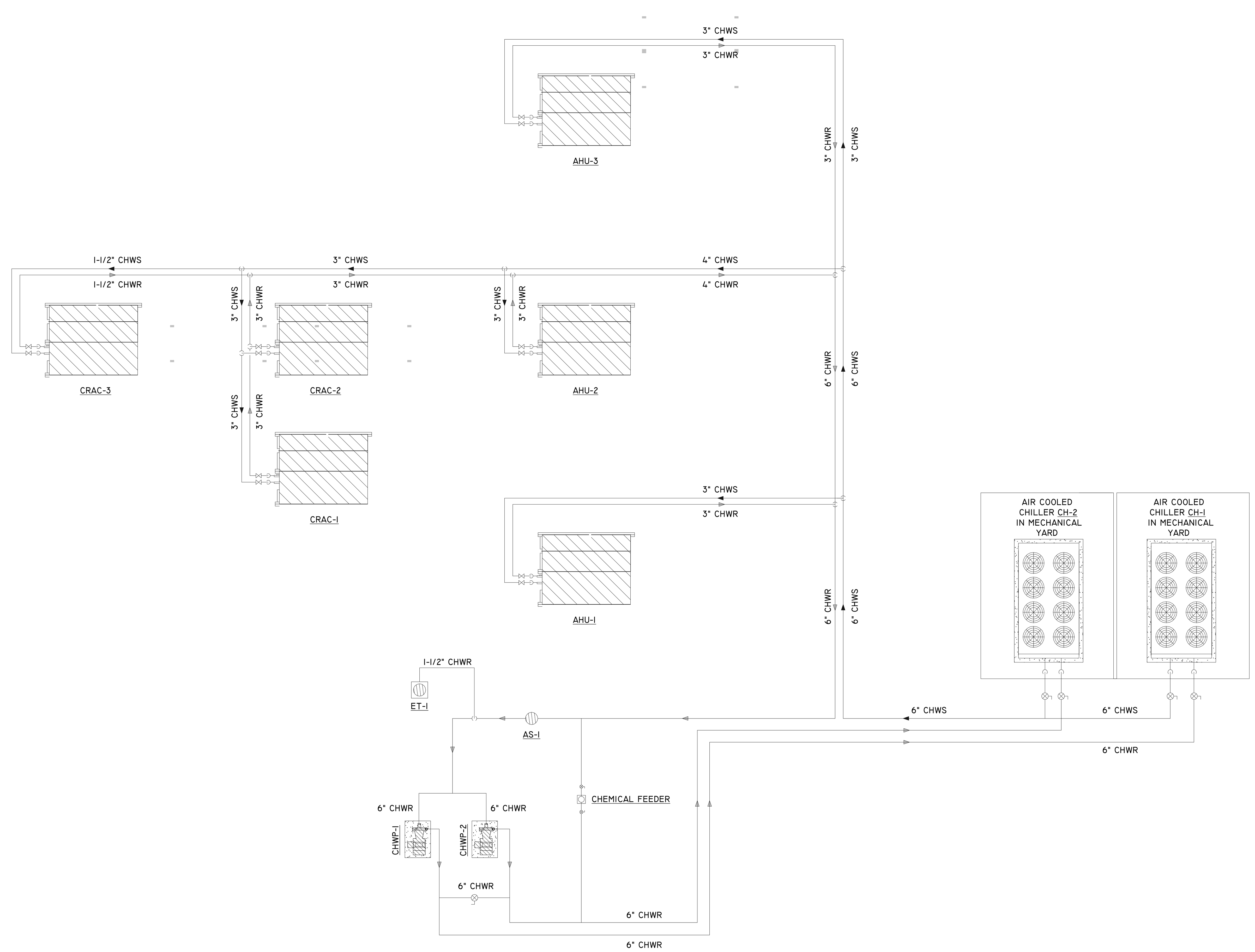

1 CHILLED WATER PIPING SCHEMATIC DIAGRAM - HVAC
Scale: NTS

FSGROUP® ARCHITECTS
13105 Northwest Fwy Suite 1110
Houston Texas 77040
713 344 1752 Office
www.fsdesignbuild.com

PROJECT NAME

THE STATE OF TEXAS FORT BEND COUNTY

INFORMATION TECHNOLGY BUILDING
EUGENE HEIMANN CIRCLE
FORT BEND COUNTY , TEXAS

CONSULTANTS

Infrastructure Associates
INFRASTRUCTURE ASSOCIATES, INC.
6117 RICHMOND AVENUE, SUITE 200
HOUSTON, TEXAS 77057-6267
(713) 622-0120 PH (713) 622-0557 FAX
TBPE FIRM REGISTRATION #F-4506
WWW.IAHOUSTON.COM

PROFESSIONAL SEAL

STATE OF TEXAS
ANWAR HASSAN
64671
LICENSED
PROFESSIONAL ENGINEER
2024-05-15

ISSUED FOR

ISSUED FOR PROPOSALS AND PERMIT

REVISIONS

No.	DESCRIPTION	DATE

KEY PLAN

TRUE
NORTH

SHEET TITLE

CHILLED WATER PIPING SCHEMATIC DIAGRAM - HVAC

SCALE

DATE
05/15/2024

PROJECT NUMBER
2319

SHEET NUMBER

M501

CONTROLS SYMBOLS & ABBREVIATIONS

	ELECTRONICALLY COMMUTATED MOTOR
	ANALOG OUTPUT POINT
	ANALOG INPUT POINT
	DIGITAL OUTPUT POINT
	DIGITAL INPUT POINT
	HARDWIRED INTERFACE
AF	AIR FLOW SENSOR
T	TEMPERATURE SENSOR
DP	DIFFERENTIAL PRESSURE SENSOR
SP	STATIC PRESSURE SENSOR
CO2	CARBON DIOXIDE SENSOR
PS	PRESSURE SWITCH
FZ	FREEZE STAT
M	MOTOR ACTUATOR
	MODULATOR CONTROL VALVE
	SOLENOID OR ON/OFF CONTROL VALVE
	PRESSURE INDEPENDENT CONTROL
	MANUAL MOTOR STARTER (OR MOTOR RATED SWITCH AS APPLICABLE)
	AUTOMATIC MOTOR STARTER
	MANUAL/AUTOMATIC MOTOR STARTER
	VARIABLE FREQUENCY MOTOR CONTROL
	SILICONE CONTROLLER RECTIFIER MOTOR CONTROL
	PULSE WIDTH MODULATOR (FOR ECM) MOTOR CONTROLLER
	PRESSURE GAUGE
	THERMOMETER
DT	DUCT TEMPERATURE
DH	DUCT HUMIDITY
SPT	STATIC PRESSURE TRANSMITTER
DSD	DUCT SMOKE DETECTOR
AFMS	AIRFLOW MEASURING STATION
MD	MOTORIZED DAMPER
MCV	MOTORIZED CONTROL VALUE
DP	DIFFERENTIAL PRESSUE
HSL	HIGH STATIC LIMIT
CSR	CURRENT RELAY SWITCH

SEQUENCE OF OPERATION:

ENGAGE MAIN CHW SYSTEM (CH-1 & CH-2) ON SCHEDULE DURING OPERATING HOURS, ON DEMAND, AND/OR ON MANUAL COMMAND.

UPON MAIN SYSTEM ENGAGEMENT, ENGAGE LEAD CHW PUMP AND ENGAGE LEAD CHILLER. MODULATE CHW PUMP SPEED TO MAINTAIN CHW DP ABOUT SET POINT. A DECREASE IN DP ACTS TO INCREASE PUMP SPEED AND VISE VERSA. UPON PERSISTENT LOW CHW DP OR PERSISTENT HIGH CHW SUPPLY TEMPERATURE, ENGAGE LAG CHW PUMP AND ENGAGE LAG CHILLER IN SEQUENCE. MODULATE LAG CHW PUMP SPEED IN TANDEM WITH LEAD PUMP SPEED. DISENGAGE LAG CHILLER WHEN LAG CHILLER MOTOR AMPS FALL PERSISTENTLY BELOW 45% (ADJUSTIBLE) OF FULL LOAD VALUE. ALTERNATE LEAD AND LAG CHILLER AND PUMP DESIGNATIONS TO EQUALIZE TOTAL ACCUMULATED RUN TIME. DISENGAGE ASSOCIATED PUMP, ISOLATION VALVE, AND CHILLER UPON CHILLER FAULT ALARM. ALARM ON PERSISTENT HIGH OR LOW CHW SUPPLY TEMPERAURE. ALARM ON PERSISTENT HIGH OR LOW CHW DP.

PROVIDE CHILLER REMOTE SETPOINT ADJUSTMENT THROUGH BAS USER INTERFACE. MONITOR AND DISPLAY CHW SYSTEM FLOW, CHS & CHR TEMPERATURE, AND CALCULATE TONNAGE.

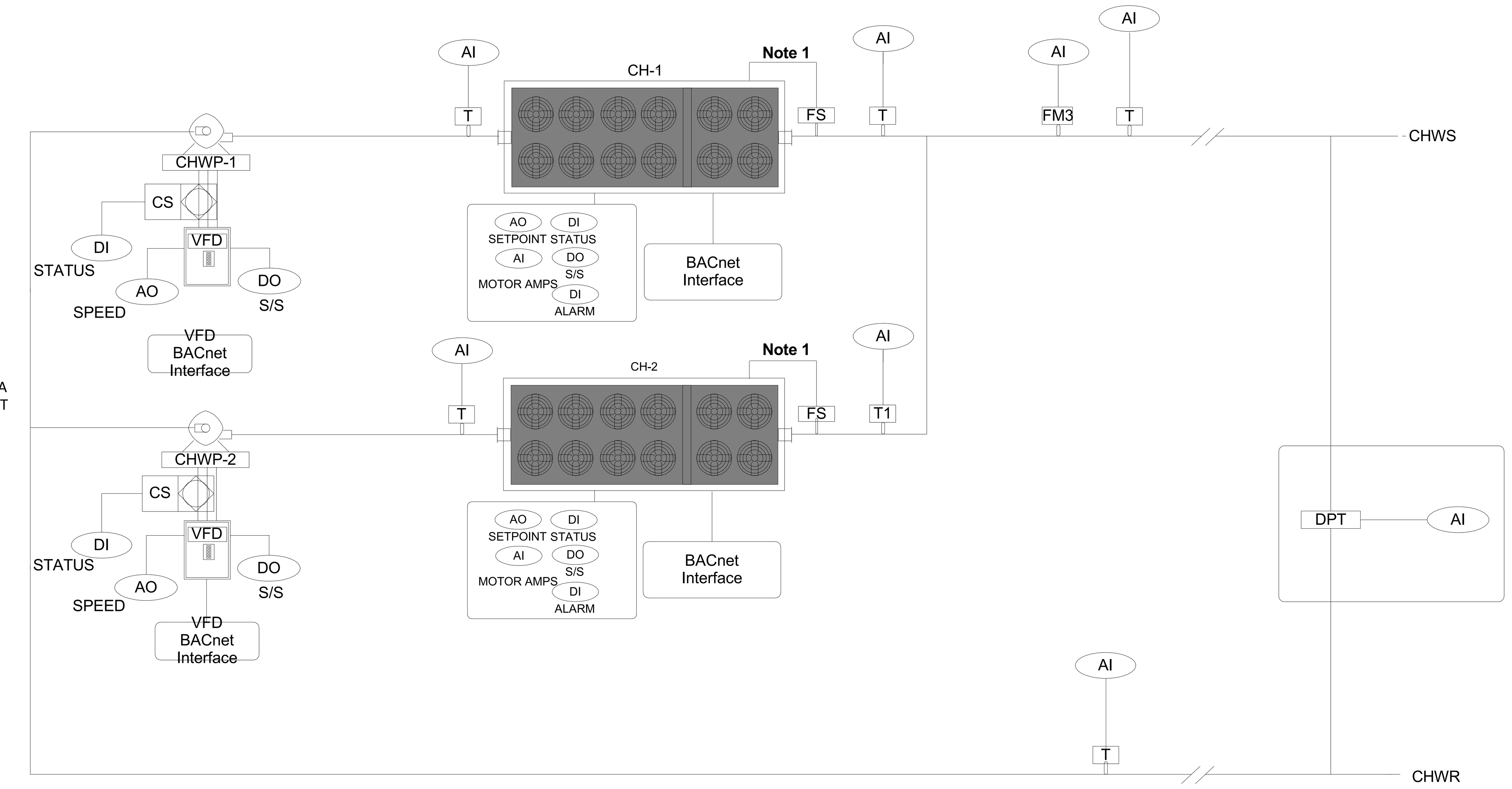

Notes:
1.Flow switch shall be furnished, mounted by mechanical contractor and wired by controls contractor.

CHILLED WATER SYSTEM CONTROL DIAGRAM — NOT TO SCALE — 1

FSGROUP® ARCHITECTS
13105 Northwest Fwy Suite 1110
Houston Texas 77040
713 344 1752 Office
www.fsdesignbuild.com

PROJECT NAME

INFORMATION TECHNOLGY BUILDING
EUGENE HEIMANN CIRCLE
FORT BEND COUNTY . TEXAS

CONSULTANTS

Infrastructure Associates
INFRASTRUCTURE ASSOCIATES, INC.
6117 RICHMOND AVENUE, SUITE 200
HOUSTON, TEXAS 77057-6267
(713) 622-0120 PH (713) 622-0557 FAX
TBPE FIRM REGISTRATION #F-4506
WWW.IAHOUSTON.COM

PROFESSIONAL SEAL

STATE OF TEXAS
ANWAR HASSAN
64671
LICENSED
PROFESSIONAL ENGINEER
2024-05-15

ISSUED FOR

ISSUED FOR PROPOSALS AND PERMIT

REVISIONS

No.	DESCRIPTION	DATE

KEY PLAN

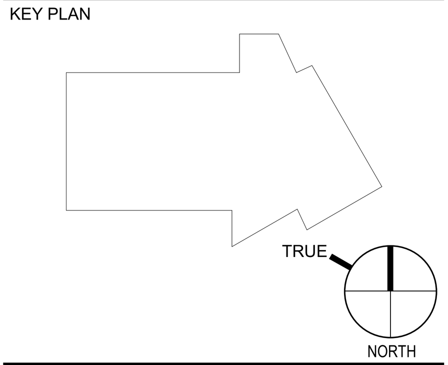

SHEET TITLE

CONTROLS

SCALE

DATE 05/15/2024

PROJECT NUMBER 2319

SHEET NUMBER

M502

CONTROLS SYMBOLS & ABBREVIATIONS

Symbol	Description
	ELECTRONICALLY COMMUTATED MOTOR
	ANALOG OUTPUT POINT
	ANALOG INPUT POINT
	DIGITAL OUTPUT POINT
	DIGITAL INPUT POINT
	HARDWIRED INTERFACE
AF	AIR FLOW SENSOR
T	TEMPERATURE SENSOR
DP	DIFFERENTIAL PRESSURE SENSOR
SP	STATIC PRESSURE SENSOR
CO2	CARBON DIOXIDE SENSOR
PS	PRESSURE SWITCH
FZ	FREEZE STAT
M	MOTOR ACTUATOR
	MODULATOR CONTROL VALVE
	SOLENOID OR ON/OFF CONTROL VALVE
	PRESSURE INDEPENDENT CONTROL
	MANUAL MOTOR STARTER (OR MOTOR RATED SWITCH AS APPLICABLE)
	AUTOMATIC MOTOR STARTER
	MANUAL/AUTOMATIC MOTOR STARTER
	VARIABLE FREQUENCY DRIVE CONTROL
	SILICONE CONTROLLER RECTIFIER MOTOR CONTROL
	PULSE WIDTH MODULATOR (FOR ECM) MOTOR CONTROLLER
	PRESSURE GAUGE
	THERMOMETER
DT	DUCT TEMPERATURE
DH	DUCT HUMIDITY
SPT	STATIC PRESSURE TRANSMITTER
DSD	DUCT SMOKE DETECTOR
AFMS	AIRFLOW MEASURING STATION
MD	MOTORIZED DAMPER
MCV	MOTORIZED CONTROL VALUE
DP	DIFFERENTIAL PRESSURE
CSR	CURRENT RELAY SWITCH

VARIABLE VOLUME AIR HANDLER (WITH TERMINAL UNITS)

SUPPLY FAN CONTROL

ENGAGE AHU SUPPLY FAN DURING SCHEDULED OPERATING HOURS, OR UPON TERMINAL UNIT COOLING DEMAND DURING SCHEDULED NON-OPERATING HOURS, OR UPON MANUAL COMMAND, AND VISE VERSA. ALARM ON PERSISTENT FAN STATUS FAILURE. MODULATE FAN SPEED TO MAINTAIN SUPPLY AIR STATIC PRESSURE (SP) ABOUT SETPOINT. AN INCREASE IN STATIC PRESSURE ACTS TO DECREASE FAN SPEED AND VISE VERSA. RESET SP SETPOINT FROM MAX TO MIN LIMITS IN .05" WC (ADJ) INCREMENTS AT 15 MINUTE (ADJ) INTERVALS BY POLLING TERMINAL UNIT SUPPLY PRIMARY AIR DAMPER POSITIONS. DECREASE SP SETPOINT WHEN ALL POLLED TERMINAL UNIT AIR DAMPER POSITIONS ARE LESS THAN 85% OPEN (ADJ). INCREASE SP SETPOINT WHEN ANY ONE TERMINAL UNIT PRIMARY AIR DAMPER POSITION IS MORE THAN 95% OPEN (ADJ). PROGRAM DEFAULT SP SETPOINT AT MAX SETPOINT LIMIT. PROGRAM MAX SETPOINT LIMIT AS DETERMINED BY AIR BALANCER. PROGRAM MIN SETPOINT LIMIT AT 0.5" WC (ADJ). ALARM ON PERSISTENT HIGH OR LOW STATIC PRESSURE. INTERLOCK MANUAL RESET HI LIMIT SUPPLY AIR STATIC PRESSURE SWITCH TO DISABLE FAN ON TRIP. ADJUST PRESSURE SWITCH TO NOT EXCEED STATIC PRESSURE RATING OF ATTACHED DUCTWORK.

COOLING COIL CONTROL

MODULATE CHILLED WATER (CHW) CONTROL VALVE TO MAINTAIN SUPPLY AIR TEMPERATURE ABOUT SUPPLY AIR (SA) TEMPERATURE SETPOINT. AN INCREASE IN SA TEMPERATURE ACTS TO INCREASE CHW FLOW AND VISE VERSA. RESET SA TEMPERATURE SETPOINT FROM MIN TO MAX LIMITS IN 0.5F INCREMENTS AT 15 MINUTE (ADJ) INTERVALS BY POLLING TERMINAL UNIT PRIMARY AIR FLOW AS A % OF TERMINAL UNIT MAX PROGRAMMED AIRLOW. INCREASE SA TEMPERATURE SETPOINT WHEN ANY ONE POLLED TERMINAL UNIT PRIMARY AIRFLOW % IS AT ITS MINIMUM LIMIT AND WHEN ALL POLLED TERMINAL UNIT PRIMARY AIRFLOW % ARE LESS THAN 85%. DECREASE SP TEMPERATURE SETPOINT WHEN ANY ONE TERMINAL UNIT PRIMARY AIRFLOW % IS MORE THAN 95% (ADJ). PROGRAM DEFAULT SA TEMPERATURE SETPOINT AT MIN LIMIT = SCHEDULED COOLING COIL LEAVING DB TEMPERAURE. PROGRAM MAX SETPOINT LIMIT AT MIN LIMIT + 10F (ADJ). ALARM ON PERSISTENT HIGH OR LOW SA TEMPERATURE.

HUMIDITY OVERRIDE CONTROL

OVERRIDE SA TEMPERAURE SETPOINT TO MIN LIMIT UPON PERSISTENT HIGH RETURN AIR (RA) RELATIVE HUMIDITY. PROGRAM DEFAULT HIGH HUMIDITY LIMIT AT 65% RH (ADJ). RELEASE HUMIDITY OVERRIDE AS RA HUMIDITY DECREASES TO 55% RH (ADJ). PROGRAM HUMIDITY OVERRIDE SEQUENCE TO HAVE FULL AUTHORITY OVER NORMAL SA TEMPERAURE SETPOINT RESET.

OUTSIDE AIR CONTROL

DURING SCHEDULED OPERATING HOURS, MODULATE OUTSIDE AIR (OA) DAMPER TO MAINTAIN OUTSIDE AIRFLOW ABOUT SETPOINT. AN INCREASE IN OA AIRFLOW ACTS TO CLOSE OA DAMPER AND VISE VERSA. CONTINUOUSLY RESET OA SETPOINT FROM MIN LIMIT TO MAX LIMIT AS RETURN AIR CO2 CONCENTRATION INCREASES FROM 700 PPM (ADJ) TO 1100 PPM. PROGRAM DEFAULT MAX LIMIT AT SCHEDULED OA FLOWRATE. PROGRAM DEFAULT MIN LIMIT = MAX LIMIT X 20% (ADJ). ALARM ON PERSISTENT LOW OA FLOW OR PERSISTENT HIGH RA CO2.

MONITOR AND DISPLAY ALL I/O CONTROL POINT VALUES.

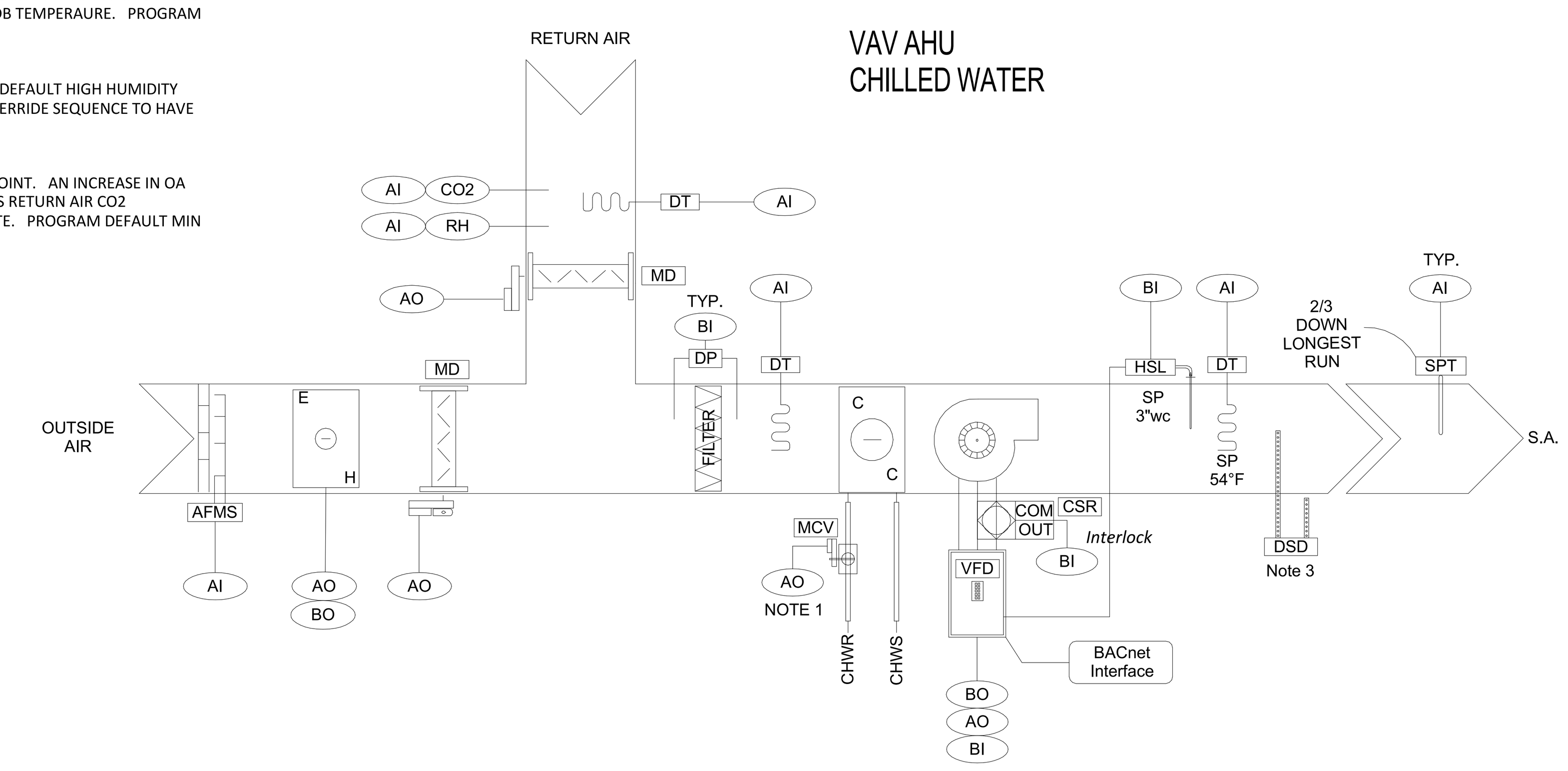

NOTES:
1. PROVIDE 2-WAY OR 3-WAY CONTROL VALVES AS INDICATED ON PIPING DIAGRAM.
2. AFMS (AIR FLOW MONITORING STATION) TO BE PROVIDED AND INSTALLED BY CONTROLS CONTRACTOR. COORDINATE AFMS INSTALLATION WITH SHEET METAL INSTALLATION.
3. DUCT SMOKE DETECTOR FURNISHED, MOUNTED, AND WIRED FOR UNIT SHUT-DOWN BY DIVISION 26.

VAV AIR HANDLER SYSTEM CONTROL - CHILLED WATER WITH OUTSIDE AIR (AHU-1, AHU-2, AHU-3) | NOT TO SCALE | 2

SEQUENCES OF OPERATION

CRAC UNITS:

PROVIDE CRAC UNITS WITH MANUFACTURER S PREPROGRAMMED STANDARD CONTROL SEQUENCES INCLUDING, AT MINIMUM, UNIT START/STOP, SPACE TEMPERTURE CONTROL WITH SUPPLY AIRFLOW AND CHILLED WATER FLOW MODULATION, FIRE/SMOKE DETECTION AND SHUTDOWN, SPACE TEMPERATURE ALARM, UNIT FAULT DETECTION AND ALARM.

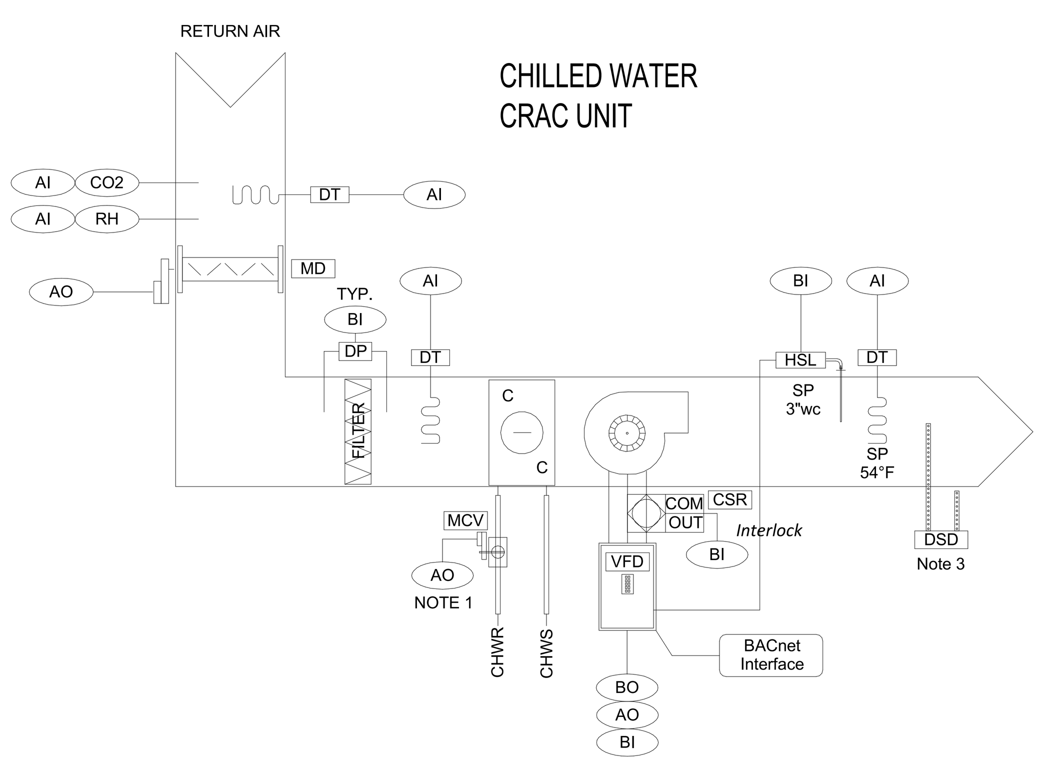

NOTES:
1. PROVIDE 2-WAY OR 3-WAY CONTROL VALVES AS INDICATED ON PIPING DIAGRAM.
2. AFMS (AIR FLOW MONITORING STATION) TO BE PROVIDED AND INSTALLED BY CONTROLS CONTRACTOR. COORDINATE AFMS INSTALLATION WITH SHEET METAL INSTALLATION.
3. DUCT SMOKE DETECTOR FURNISHED, MOUNTED, AND WIRED FOR UNIT SHUT-DOWN BY DIVISION 26.

CHILLED WATER CRAC UNIT SYSTEM CONTROL | NOT TO SCALE | 3

FAN POWERED TERMINAL SEQUENCES

FAN CONTROL

ENGAGE FANS AUTOMATICALLY TO OPERATE CONTINUSOULY DURING SCHEDULED OPERATING HOURS.
CYCLE FANS AUTOMATICALLY DURING SCHEDULED NON-OPERATING HOURS IN TANDEM WITH SPACE HEATING OR COOLING DEMAND.
AUTOMATICALLY COMMAND FAN MOTOR SPEED TO ACHIEVE SCHEDULED S/A (MAX) CFM WHEN PRIMARY AIR IS GREATER THAN MIN LIMIT VALUE.
AUTOMATICALLY COMMAND FAN MOTOR SPEED TO ACHIEVE SCHEDULED HEATING (MIN) CFM VALUE WHEN PRIMARY AIRFLOW IS AT MIN LIMIT VALUE.
FOR TERMINAL UNITS WITH SPACE CO2 SENSORS INDICATED, OVERRDE FAN MOTOR SPEED TO SCHEDULED S/A (MAX) CFM WHEN SPACE CO2 EXCEEDS 1100 PPM (ADJ).

PRIMARY AIRFLOW CONTROL

MODULATE PRIMARY AIR DAMPER TO MAINTAIN PRIMARY AIRFLOW SETPOINT.
RESET PRIMARY AIRFLOW SETPOINT BETWEEN SCHEDULED MIN AND MAX CFM LIMITS IN TANDEM WITH SPACE COOLING PROPOTIONAL BAND. AN INCREASE IN COOLING DEMAND INCREASES AIRFLOW SETPOINT AND VISE VERSA.
MONITOR AND DISPLAY PRIMARY DAMPER POSISTION AND AIRFLOW.
ALARM ON PERSISTENT HIGH OR LOW AIRFLOW

HEATING CONTROL

MODULATE CYCLE HEATING IN SEQUENTIAL STAGES TO MAINTAIN SPACE TEMP ABOUT HEATING SETPOINT.

SPACE SETPOINT CONTROL

PROGRAM SPACE COOLING TEMP SETPOINT AT 72 F (ADJ) AND HEATING TEMP SETPOINT AT 68 F (ADJ) DURING SCHEDULED OPERATING HOURS.
PROGRAM SPACE COOLING TEMP SETPOINT AT 77 F (ADJ) AND HEATING TEMP SETPOINT AT 65 F (ADJ) DURING SCHEDULED NON-OPERATING HOURS.
RESET SPACE COOLING TEMP SETPOINT +5 F (ADJ) AND HEATING SETPOINT -3 F (ADJ) DURING SCHEDULED OPERATING HOURS WHEN NO SPACE OCCUPANCY IS DETECTED FOR A 15 MIN (ADJ) INTERVAL.
CANCEL SPACE TEMP RESET IMMEDIATELY UPON DETECTION OF SPACE OCCUPANCY.
RESET SPACE COOLING TEMP SETPOINT +10 F (ADJ) AND HEATING SETPOINT -5 F (ADJ) DURING SCHEDULED NON-OPERATING HOURS.
MONITORI AND DISPLAY ALL I/O VALUES.
ALARM ON PERSISTENT HIGH OR LOW SPACE TEMP.

MONITOR AND DISPLAY ALL I/O CONTROL POINT VALUES.

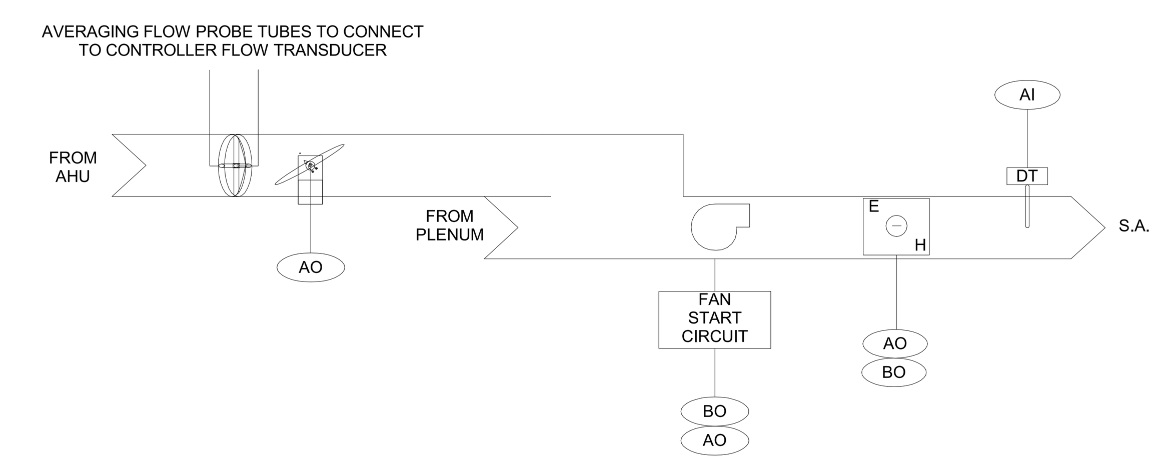

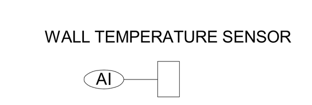

LOCATED 48" ABOVE FINISHED FLOOR OR IF ADJACENT TO LIGHT SWITCH MOUNTED EVEN WITH TOP OF LIGHT SWITCH PLATE IN ACCORDANCE WITH ADA (FOR CORRIDORS ONLY)

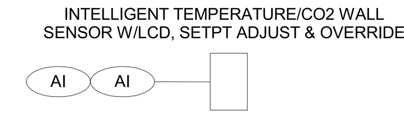

(LOCATED 42" ABOVE FINISHED FLOOR OR IF ADJACENT TO LIGHT SWITCH MOUNTED EVEN WITH TOP OF LIGHT SWITCH PLATE)

FAN POWERED VAV TERMINAL BOX SYSTEM CONTROL | NOT TO SCALE | 1

FSGROUP®
ARCHITECTS
13105 Northwest Fwy Suite 1110
Houston Texas 77040
713 344 1752 Office
www.fsdesignbuild.com

PROJECT NAME

THE STATE OF TEXAS · FORT BEND COUNTY

INFORMATION TECHNOLGY BUILDING
EUGENE HEIMANN CIRCLE
FORT BEND COUNTY . TEXAS

CONSULTANTS

Infrastructure Associates
INFRASTRUCTURE ASSOCIATES, INC.
6117 RICHMOND AVENUE, SUITE 200
HOUSTON, TEXAS 77057-6267
(713) 622-0120 PH (713) 622-0557 FAX
TBPE FIRM REGISTRATION #F-4506
WWW.IAHOUSTON.COM

PROFESSIONAL SEAL

STATE OF TEXAS
ANWAR HASSAN
64671
LICENSED
PROFESSIONAL ENGINEER
2024-05-15

ISSUED FOR

ISSUED FOR PROPOSALS AND PERMIT

REVISIONS

No.	DESCRIPTION	DATE

KEY PLAN

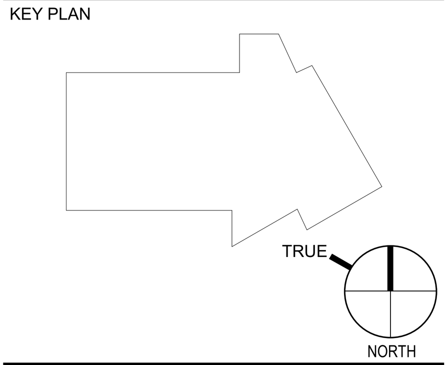

SHEET TITLE

CONTROLS

SCALE

DATE 05/15/2024

PROJECT NUMBER 2319

SHEET NUMBER

M503

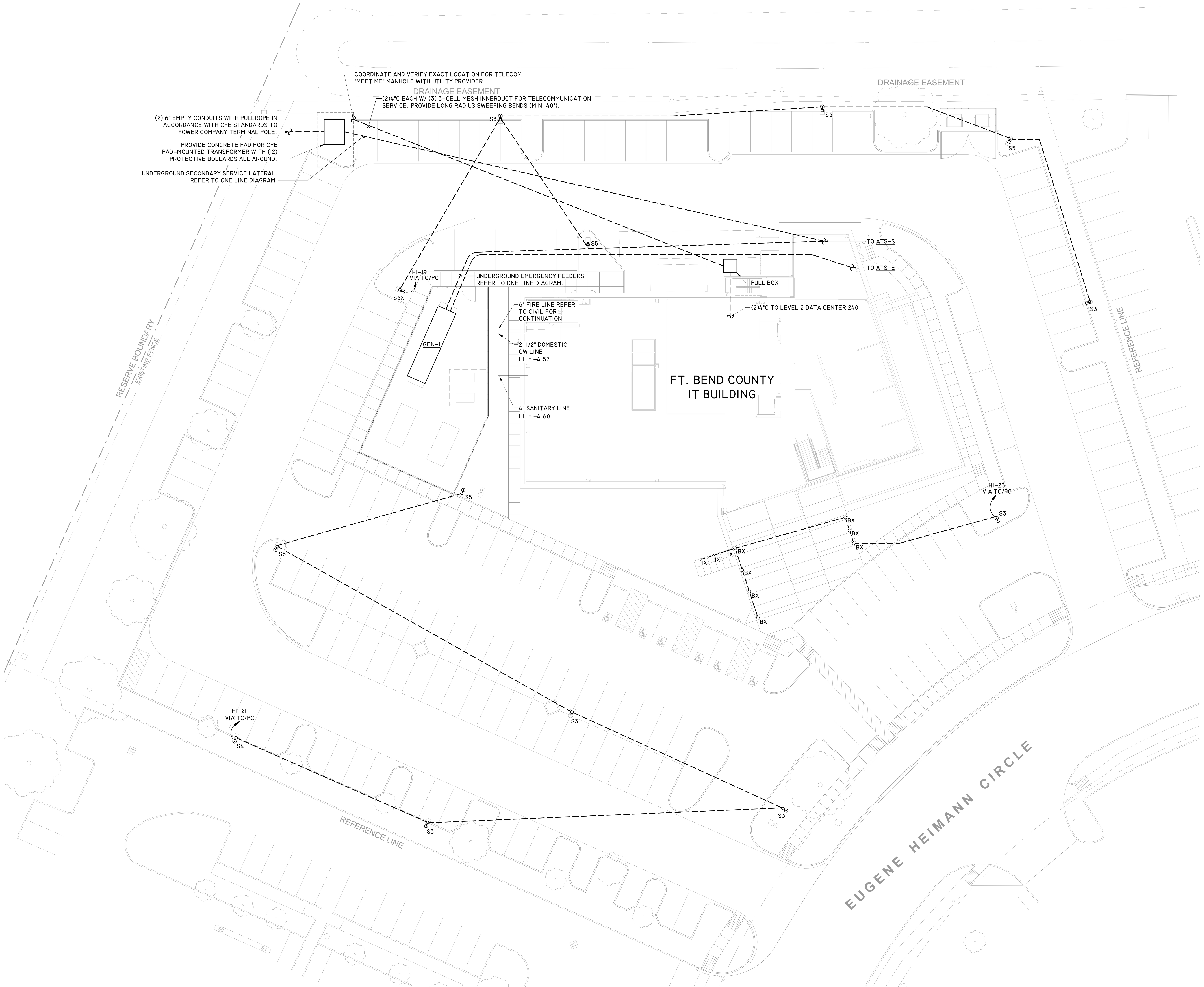

1 SITE PLAN - MEP
MEP101
SCALE : 1" = 20'-0"

ELECTRICAL GENERAL SITE NOTES:

1. ELECTRICAL CONTRACTOR IS RESPONSIBLE FOR COORDINATION OF ELECTRICAL SERVICE ENTRANCE FOR THE PROJECT. CONTRACTOR SHALL SUBMIT INFORMATION DEVELOPED BY ENGINEER IN FORM OF SITE PLAN, DRAWINGS, ONE LINE DIAGRAM, AND LOAD ANALYSIS TO THE POWER COMPANY REPRESENTATIVE FOR PROCESSING SERVICE REQUEST. LOCATION OF TRANSFORMER SHALL BE COORDINATED WITH POWER COMPANY AS SHOWN ON THE PLAN. CONTRACTOR IS ALSO RESPONSIBLE FOR FILING ALL REQUESTS AND APPLICATIONS FOR SERVICE TO THE POWER COMPANY. DETERMINATION OF LENGTH, QUANTITIES, PULL BOXES/MANHOLES AND STANDARD OF CONSTRUCTION FOR UNDERGROUND PRIMARY LINES (AS REQUIRED) AND TRANSFORMER PAD SHALL BE RESPONSIBILITIES OF THE CONTRACTOR. DETAILS FOR ELECTRICAL SERVICE TRANSFORMERS PAD AND UNDERGROUND PRIMARY CONDUIT SHOWN ON THESE DOCUMENTS SHALL BE APPROVED BY POWER COMPANY BEFORE ANY CONSTRUCTION BEGINS. CONTRACTOR SHALL EXPEDITE COORDINATION EFFORT FOR ANY CONTRACTUAL ARRANGEMENTS FOR EASEMENT RELATED TO PRIMARY OVERHEAD OR UNDERGROUND LINES IF REQUIRED BY POWER COMPANY. ELECTRICAL CONTRACTOR IS RESPONSIBLE FOR ALL FEES ASSOCIATED WITH THE NEW SERVICE REQUEST.
2. UNDERGROUND CONDUIT ROUTING SHALL BE COORDINATED WITH EXISTING PAVEMENT AND UNDERGROUND UTILITIES. COORDINATE WITH CIVIL PLANS FOR MORE INFORMATION. PROVIDE PULL STRING FOR ALL UNDERGROUND EMPTY CONDUITS. REFER TO SPECIFICATIONS AND DETAILS FOR INSTALLATION METHODS AND MATERIALS.
3. PRIOR TO TRENCHING, UNDERGROUND CONDUIT ROUTING SHALL BE MARKED FOR REVIEW AND ROUTING PATH APPROVAL OBTAINED BY THE OWNER REPRESENTATIVE. COORDINATE WITH EXISTING IMPROVEMENTS, TREES, ROOT SYSTEMS, EXISTING PAVEMENT, AND UNDERGROUND UTILITITES. PROVIDE PULL ROPE FOR ALL UNDERGROUND EMPTY CONDUITS.
4. ELECTRICAL CONTRACTOR SHALL SEAL INSIDE AND OUT ALL CONDUITS WHICH TRAVEL BETWEEN CONDITIONED AND NON-CONDITIONED SPACES (OR OUTDOOR TO INDOOR) AFTER PULLING CONDUCTORS SO THAT MOISTURE CONDENSATION THROUGH THE CONDUITS IS MITIGATED.
5. ELECTRICAL CONTRACTOR SHALL FULLY COORDINATE WITH TELECOMMUNICATIONS AND SECURITY DRAWINGS AND SPECIFICATIONS. PROVIDE ALL CONDUITS, BACKBOXES, JUNCTION BOXES, AND PULL BOXES SPECIFIED. WHERE THERE ARE DRAWING DISCREPANCIES, THE CONTRACTOR SHALL INSTLAL THE GREATER QUANTITY OF DEVICES.
6. ALL EQUIPMENT (I.E. GENERATOR, CHILLERS, CHWP) SHALL BE MOUNTED 36" ABOVE 500 YEAR FLOOD PLAIN. PROVIDE PLATFORMS AS REQUIRED TO MAINTAIN ALL EQUIPMENT MANUFACTURERS REQUIRED MAINTENANCE ACCESS AND CLEARANCES.

FSGROUP® ARCHITECTS
13105 Northwest Fwy Suite 1110
Houston Texas 77040
713 344 1752 Office
www.fsdesignbuild.com

PROJECT NAME

INFORMATION TECHNOLGY BUILDING
EUGENE HEIMANN CIRCLE
FORT BEND COUNTY . TEXAS

CONSULTANTS

Infrastructure Associates
INFRASTRUCTURE ASSOCIATES, INC.
6117 RICHMOND AVENUE, SUITE 200
HOUSTON, TEXAS 77057-6267
(713) 622-0120 PH (713) 622-0557 FAX
TBPE FIRM REGISTRATION #F-4506
WWW.IAHOUSTON.COM

PROFESSIONAL SEAL

STATE OF TEXAS
SEVAK KALANTARIANS
97498
LICENSED
PROFESSIONAL ENGINEER
2024-05-15

ISSUED FOR

ISSUED FOR PROPOSALS AND PERMIT

REVISIONS

No.	DESCRIPTION	DATE

KEY PLAN

TRUE
NORTH

SHEET TITLE

SITE PLAN - MEP

SCALE
1" = 20'-0"

DATE
05/15/2024

PROJECT NUMBER
2319

SHEET NUMBER

MEP101

GENERAL NOTES:

1. SEE 2/M401 FOR ROOF EXHAUST FAN DETAIL.
2. SEE 1/M402 FOR SPLIT SYSTEM INSTALLATION AND PIPING DETAIL.
3. SEE P301 FOR CONTINUATION OF STORM LINES

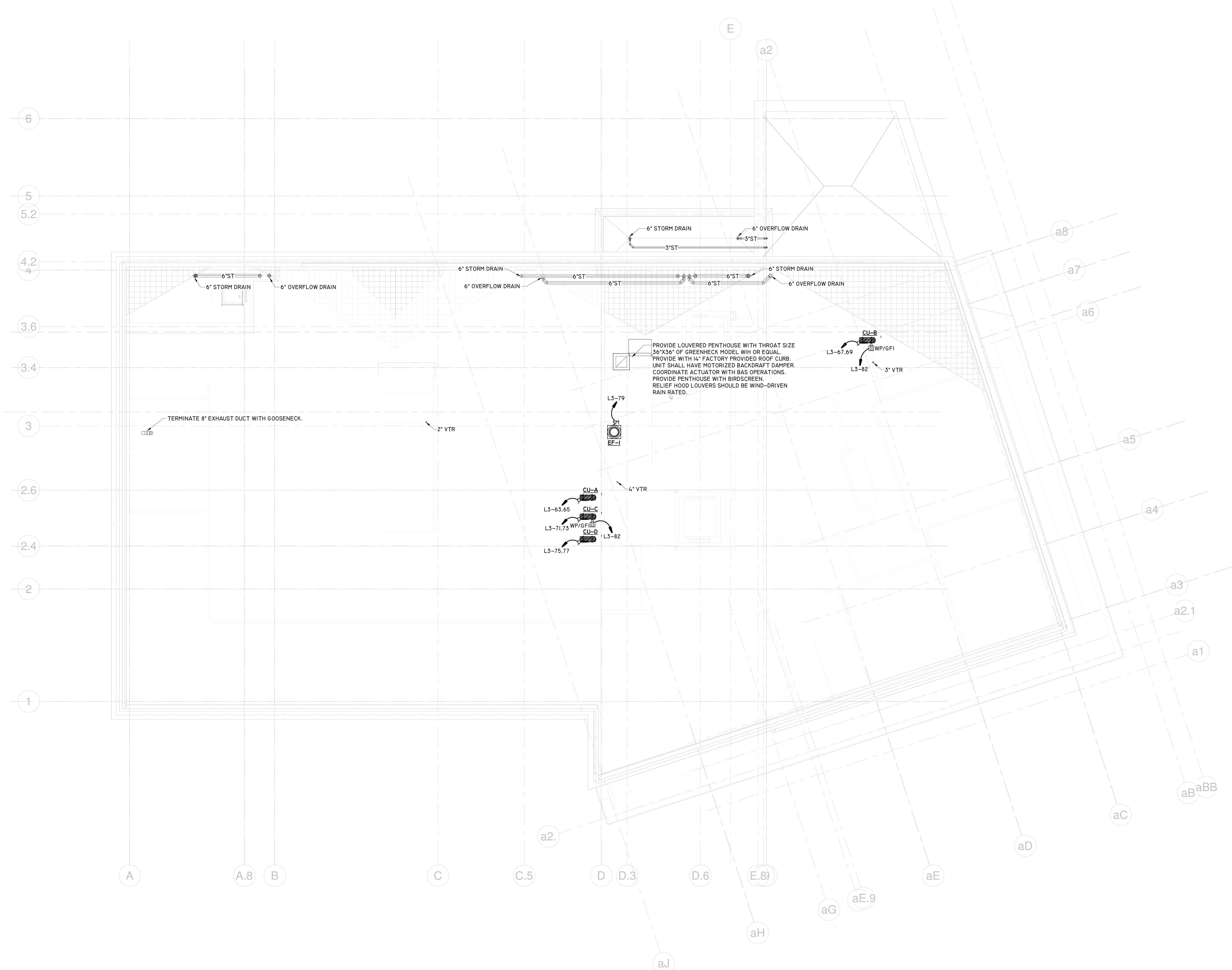

1 ROOF PLAN - MEP
1/8" = 1'-0"

FSGROUP
ARCHITECTS
13105 Northwest Fwy Suite 1110
Houston Texas 77040
713 344 1752 Office
www.fsdesignbuild.com

PROJECT NAME

INFORMATION TECHNOLGY BUILDING
EUGENE HEIMANN CIRCLE
FORT BEND COUNTY . TEXAS

CONSULTANTS

Infrastructure Associates
INFRASTRUCTURE ASSOCIATES, INC.
6117 RICHMOND AVENUE, SUITE 200
HOUSTON, TEXAS 77057-6267
(713) 622-0120 PH (713) 622-0557 FAX
TBPE FIRM REGISTRATION #F-4506
WWW.IAHOUSTON.COM

PROFESSIONAL SEAL

STATE OF TEXAS
SEVAK KALANTARIANS
97498
LICENSED
PROFESSIONAL ENGINEER
2024-05-15

ISSUED FOR
ISSUED FOR PROPOSALS AND PERMIT

REVISIONS

No.	DESCRIPTION	DATE

KEY PLAN

TRUE NORTH

SHEET TITLE
ROOF PLAN - MEP

SCALE 1/8" = 1'-0"
DATE 05/15/2024
PROJECT NUMBER 2319
SHEET NUMBER
MEP102

ELECTRICAL SPECIFICATIONS

(BOOKS SPECIFICATIONS SUPERCEDE ANY NOTES BELOW)

1. SCOPE: THIS DIVISION SHALL INCLUDE ALL EQUIPMENT, MATERIALS, AND LABOR REQUIRED FOR COMPLETE INSTALLATION OF THE ELECTRICAL SYSTEM. PROJECT INCLUDES INSTALLATION OF NEW ELECTRICAL DISTRIBUTION SYSTEM, HVAC SYSTEM CONNECTIONS, NEW LIGHTING SYSTEM, NEW RECEPTACLES AND OUTLETS, FIRE ALARM AND NOTIFICATION SYSTEM, AND OTHER ELECTRICAL WORK AS INDICATED ON THE PLANS. CONTRACTOR SHALL PROVIDE CONDUITS, CONDUCTORS FOR POWER, CONTROLS, AND LIGHTING, LIGHTING CONTACTOR AND CONTACT CLOSURES, AND ALL REQUIRED APPARATUS REQUIRED FOR FULL OPERATION OF THE ELECTRICAL SYSTEM.
2. SITE VISIT AND FAMILIARIZATION: CONTRACTORS PROPOSING TO UNDERTAKE WORK UNDER THIS DIVISION SHALL VISIT THE SITE OF THE WORK, AND FULLY INFORM THEMSELVES OF ALL CONDITIONS THAT AFFECT THE WORK, OR COST THEREOF. CONTRACTOR SHALL EXAMINE THE DRAWINGS AND SPECIFICATIONS AS RELATED TO THE SITE CONDITIONS. ANY DISCREPANCY SHALL BE REPORTED TO THE ENGINEER.
3. NOTICE: CONSIDERATION WILL NOT BE GRANTED FOR ANY ALLEGED MISUNDERSTANDING OF THE AMOUNT OF WORK TO BE PERFORMED. TENDER OF A PROPOSAL SHALL CONVEY FULL AGREEMENT TO ALL ITEMS AND CONDITIONS SPECIFIED, INDICATED ON THE DRAWINGS, AND/OR REQUIRED BY NATURE OF THE SITE.
4. DISCREPANCIES: SHOULD CONTRACTOR FIND DISCREPANCIES OR OMISSIONS IN THE CONTRACT DOCUMENTS, OR BE IN DOUBT AS TO THE INTENT THEREOF, HE SHALL IMMEDIATELY OBTAIN CLARIFICATION FROM THE ARCHITECT BEFORE SUBMITTING PROPOSAL FOR WORK IN THIS DIVISION.
5. DEMOLITION: ALL ELECTRICAL COMPONENTS OF THE EXISTING SYSTEM WHICH ARE NOT UTILIZED FOR NEW CONFIGURATION SHALL BE REMOVED AND DISPOSED OF BY CONTRACTOR. REFER TO DEMOLITION NOTES AND DRAWINGS FOR EXTENT OF WORK.
6. TIMELY PLACING OF MATERIALS AND EQUIPMENT: ALL ELECTRICAL APPARATUS SHALL BE INSTALLED AT THE PROPER TIME DURING PROGRESS OF CONSTRUCTION. COORDINATE WORK OPERATIONS WITH OTHER CRAFTS.
7. SPACE REQUIREMENTS: CONTRACTOR FOR WORK UNDER THIS DIVISION SHALL BE FULLY RESPONSIBLE FOR DETERMINING IN ADVANCE OF PURCHASE THAT EQUIPMENT AND MATERIALS PROPOSED FOR INSTALLATION SHALL FIT INTO THE CONFINES INDICATED.
8. MANUFACTURERS' LITERATURE: DELIVER ALL PRINTED TAGS, INSTRUCTIONS, CERTIFIED DRAWINGS, PARTS LISTED, CERTIFICATES, ETC., SUPPLIED WITH EQUIPMENT ITEMS, TO THE OWNER.
9. CODES, PERMITS, AND FEES: WORK UNDER THIS DIVISION SHALL BE CONSTRUCTED IN STRICT CONFORMANCE WITH PERTINENT PROVISIONS OF CITY AND STATE BUILDING CODES.
   - A. ALL WORK SHALL COMPLY WITH THE 2023 EDITION OF NATIONAL ELECTRIC CODE (NEC).
   - B. OBTAIN ALL REQUIRED PERMITS. PAY ALL LEGAL FEES FOR PERMITS AND INSPECTIONS BY AUTHORITIES HAVING JURISDICTION.
   - C. ALL WORK SHALL COMPLY WITH REQUIREMENTS OF AUTHORITIES HAVING JURISDICTION.
10. CUTTING AND PATCHING:
    - A. CONTRACTOR FOR THIS DIVISION SHALL LAYOUT TO DIMENSION AND LOCATIONS, CUT AND PATCH ALL OPENINGS ON SURFACES TO BE FORMED, FRAMED, OR CUT.
    - B. SHOULD CONTRACTOR FOR THIS DIVISION FAIL TO ADHERE WITH THIS REQUIREMENT, AS WORK PROGRESSES, ANY OPENINGS SHALL BE CUT AND PATCHED BY GENERAL CONTRACTOR AT THE EXPENSE OF THIS CONTRACTOR FOR THIS DIVISION.
11. PROTECTION OF APPARATUS: TAKE ALL PRECAUTIONS NECESSARY FOR PROPER PROTECTION OF NEW EQUIPMENT, APPARATUS, AND MATERIALS FROM DAMAGE. FAILURE TO DO SO WILL BE CAUSE FOR REJECTION OF ANY ITEM COMING UNDER QUESTION.
12. SHOP DRAWINGS: CONTRACTOR FOR THIS DIVISION SHALL SUBMIT SHOP DRAWINGS AND CATALOGUE DATA ON ALL MAJOR ITEMS OF EQUIPMENT AND SYSTEMS AND OTHER MATERIAL REQUESTED BY ARCHITECT/ENGINEER. SUBMIT PRODUCT DATA FOR SWITCHBOARDS, PANELBOARDS, TRANSFORMERS, WIRES, CABLE, SUPPORTING DEVICES, IDENTIFICATION COMPONENTS, LIGHT FIXTURES, FIRE ALARM SYSTEM AND COMPONENTS, WIRING DEVICES, MULTI-OUTLET RACEWAYS, CABINETS, AND BOXES. SUBMIT SIX COPIES WITHIN THIRTY (30) DAYS AFTER CONTRACT AWARD, AND IN NOT MORE THAN TWO GROUPS OF SUBMITTALS. SUBMITTALS SHALL CONSIST OF LAYOUTS, WORKING DRAWINGS, CUTS, AND OPERATING AND PERFORMANCE DATA. ALLOW FOUR (4) WEEKS FOR REVIEW AND APPROVAL OF THE SHOP DRAWINGS BY ENGINEER.
13. MATERIALS AND WORKMANSHIP: ALL MATERIALS AND EQUIPMENT SHALL BE NEW, OF BEST GRADE OF STANDARD MANUFACTURE. APPROVED BY UL, AND BE SO LABELED. FOR WIRE AND CABLE, MARKED AS REQUIRED BY ART. 310-2, NEC. INSTALLED BY SKILLED ELECTRICIAN, WORKING UNDER THE DIRECT SUPERVISION OF COMPETENT EXPERIENCED FOREMAN AND/OR SUPERINTENDENT. PRODUCTS SHALL BE INSTALLED IN A THOROUGH WORKMANLIKE MANNER, PRESENTING A NEAT, CLEAN-CUT APPEARANCE WHEN COMPLETED. ANY PART OR PARTS NOT MEETING THIS REQUIREMENT SHALL BE REPLACED OR REBUILT WITHOUT EXTRA EXPENSE TO OWNER.
14. PROTECTION OF EXISTING: PLENUM CABLE SHALL BE PROPERLY SECURED ABOVE CEILING PER APPLICABLE CODES.
15. WIRING METHODS: THE DRAWINGS ARE DIAGRAMMATIC AND ARE INTENDED TO SHOW THE LOCATIONS OF EQUIPMENT AND ARRANGEMENT OF CIRCUITS ONLY. EXACT LOCATIONS SHALL BE DETERMINED BY ACTUAL MEASUREMENT AT THE SITE. CONTRACTOR SHALL BE FULLY RESPONSIBLE FOR ALL RISES, DROPS, OFFSETS, ETC. NECESSARY TO AVOID CONFLICT WITH STRUCTURAL MEMBERS, AND SIMILAR ITEMS, WHEN INSTALLING ELECTRICAL CONDUITS. INSTALL EXPOSED CONDUIT AS SHOWN OR NOTED, PARALLEL TO HORIZONTAL AND VERTICAL LINES OF STRUCTURES. MAKE BENDS WITH 90 DEGREE TURN ONLY, OR WITH APPROVED FITTINGS.
16. CONDUIT: FURNISH A COMPLETE RACEWAY SYSTEM FOR BUT NOT LIMITED TO FEEDER, BRANCH CIRCUITS, CONTROL WIRING, AND AUXILIARY SYSTEM WIRING.
    - A. USE LIQUID TIGHT FLEXIBLE METAL CONDUIT AND FITTINGS FOR ALL MOTORIZED CONNECTIONS, WHERE EQUIPMENT IS SUBJECT TO MOVEMENT, OR LOCATED OUTDOOR.
    - B. WHERE ENTERING PANELS, PULL BOXES, J-BOXES, OR OUTLET BOXES, SECURED IN PLACE WITH WITH LOCK-NUTS INSIDE AND OUTSIDE, AND INSULATED BUSHING INSIDE.
    - C. BENDS AND OFFSETS MADE WITH APPROVED TOOLS ONLY. BENDS OR OFFSETS IN WHICH THE PIPE IS CRUSHED OR DEFORMED SHALL NOT BE INSTALLED.
    - D. USE EMT FOR INTERIOR DRY LOCATIONS, PVC FOR UNDERGROUND INSTALLATION, AND RIGID GALVANIZED STEEL FOR EXPOSED LOCATIONS SUBJECT TO DAMAGE.
17. OUTLET AND JUNCTION BOXES: FURNISH AND INSTALL ALL JUNCTION BOXES REQUIRED TO FACILITATE INSTALLATION OF THE VARIOUS CONDUIT SYSTEMS. JUNCTION BOXES SHALL BE SUITABLE FOR ENVIRONMENT AND APPLICATION USED FOR.
18. WIRE AND CABLE: ALL WIRE AND CABLE SHALL:
    - A. BE NEW AND OF SOFT DRAWN, ANNEALED, COPPER HAVING A CONDUCTIVITY OF NOT LESS THAN 98% OF THAT OF PURE COPPER; EACH WIRE CONTINUOUS WITHOUT WELD, SPLICE OR JOINT THROUGHOUT ITS LENGTH; UNIFORM IN CROSS SECTION AND FREE FROM FLAWS, SCALES, AND OTHER IMPERFECTIONS.
    - B. UNLESS OTHERWISE SPECIFIED OR NOTED, WIRES SHALL BE #12 AWG (FOR PHASE, NEUTRAL, AND GROUND CONDUCTORS) TYPE THW, THWN, THHN, AS MANUFACTURED BY TRIANGLE, GENERAL ELECTRIC, OKONITE, OR ANACONDA.
    - C. ALL WIRE #8 AND LARGER SHALL BE STRANDED.
    - D. NOT BE DRAWN INTO A CONDUIT UNTIL ALL WORK WHICH MAY CAUSE INJURY TO INSULATION IS COMPLETE. WHERE TWO OR MORE CIRCUITS RUN TO A SINGLE OUTLET BOX, TAG EACH CIRCUIT AS A GUIDE.
    - E. HAVE ALL STRANDED CONDUCTORS FURNISHED WITH COPPER CONNECTING LUGS, DRILLED, OR REAMED THE FULL DIAMETER OF THE BARE CONDUCTORS. MAINS AND FEEDERS SHALL BE RUN THEIR ENTIRE LENGTH IN CONTINUOUS PIECES WITHOUT JOINTS OR SPLICES.
19. IDENTIFICATION OF CONDUCTORS AND PANELBOARD ELEMENTS:
    - A. EACH AND EVERY MAIN AND FEEDER CONDUCTOR SHALL BE IDENTIFIED AT EACH OUTLET POINT WHERE SUCH CONDUCTOR TERMINATES. FEEDER BUNDLES PASSING THROUGH A JUNCTION OR SUPPORT BOX SHALL ALSO BE IDENTIFIED WITHIN SUCH ENCLOSURE, BUT MAY BE IDENTIFIED IN SUCH LOCATIONS AS A GROUP.
    - B. IDENTIFY BY USE OF PERMANENT TYPE BANDS, BRADY, OR T AND B. A DEFINITE NUMBER AND/OR LETTER CODE SHALL BE EMPLOYED AND BE UNIFORM THROUGHOUT EACH CONDUCTOR.
    - C. IDENTIFY EACH SWITCH, INCLUDING MAIN DISCONNECT AND MOTOR STARTER WITH WHITE-ON-BLACK NAMEPLATE, EACH HAVING 1/4" HIGH LETTERS. NEATLY AND SECURELY ADHERE NAMEPLATES TO THE UNIT.
20. SWITCHES: FURNISH AND INSTALL ALL FUSIBLE AND NON-FUSIBLE SWITCHES AS REQUIRED BY CODES, WHETHER OR NOT SHOWN AND/OR NOTED. SWITCHES SHALL BE:
    - A. HEAVY DUTY WITH NEMA-1 OR 3R ENCLOSURE, AS REQUIRED, AND BE PROVIDED WITH PAD-LOCKING FEATURE.
    - B. PROVIDED AT EACH MOTOR THAT IS OUT OF SIGHT OF THE SWITCH OR PANEL FROM WHICH FED; AND BE NON-FUSIBLE DISCONNECT FOR SUCH USE.
    - C. SWITCH MANUFACTURER SHALL BE GE, WESTINGHOUSE, OR SQUARE D.
    - D. DISCONNECT SWITCHES INSTALLED OUTSIDE THE BUILDING SHALL BE IN NEMA-3 ENCLOSURES.
    - E. FUSIBLE SWITCH-STARTER UNITS: EACH UNIT SHALL BE TOTALLY ENCLOSED AND EFFECTIVELY BARRIERED, MANUALLY OPERATED QUICK-MAKE, QUICK BREAK, HORSEPOWER RATED STARTER. PROVIDE CLASS R TYPE REJECTION FUSE CLIPS.
    - F. IDENTIFY EACH DEVICE WITH NAMEPLATE SHOWING THE LOAD SERVED, MATCHING THE EXISTING NAMEPLATES.
21. WIRING DEVICES: FURNISH AND INSTALL ALL WIRING DEVICES AS INDICATED ON THE DRAWINGS. DEVICES SHALL IN ALL CASES BE SUITABLE FOR THE USE INTENDED AND SHALL HAVE VOLTAGE AND CURRENT RATINGS ADEQUATE FOR THE LOADS TO BE SERVED.
    - A. MOUNTING: HEIGHTS OF ALL DEVICES ARE FROM FINISH FLOOR TO CENTERLINE OF DEVICE. DEVICES SHOWN ON THE DRAWINGS IN GROUPS OF TWO OR MORE SHALL BE LOCATED HORIZONTALLY IN SUCH A MANNER AS TO BE CLOSE AS POSSIBLE FROM THE CENTERLINE OF THE FIRST DEVICE TO THE CENTERLINE OF THE NEXT DEVICE UNLESS OTHERWISE NOTES.
    - B. WALL SWITCHES: SHALL BE LEVITON DECORA TYPE, WHITE IN COLOR. USE CORRESPONDING DOUBLE POLE, THREE-WAY, FOUR-WAY, KEYED AND DIMMER SWITCHES WHERE NOTES. MOUNT AT 3'-10" A.F.F. AND WITHIN 6" OF ADJACENT DOOR JAMB, UNLESS OTHERWISE NOTED. USE "KEYED" SWITCHES IN LOCATIONS INDICATED.
    - C. CONVENIENCE OUTLETS: SHALL BE GROUNDING TYPE, 20 AMP, 125 VOLT, LEVITON, WHITE COLOR. WEATHERPROOF DUPLEX OUTLETS SHALL BE LEVITON 5342 WITH SIERRA NO. WPD-8 PLATE. MOUNT AT 18" A.F.F., UNLESS OTHERWISE NOTED. PROVIDE NEMA 5-20R DEVICES UNLESS OTHERWISE INDICATED. PROVIDE SPECIFICATION (SPEC) GRADE HEAVY DUTY STRAIGHT BLADE DEVICES UNLESS OTHERWISE NOTED. PROVIDE HOSPITAL GRADE DEVICES WHERE INDICATED, OR AS REQUIRED BY CODES.
    - D. ACCEPTABLE ALTERNATE MANUFACTURERS: SHALL BE LSI, H.E. WILLIAMS, HUBBELL, P&S AND BRYANT, PROVIDED THEIR DEVICES ARE OF THE SAME TYPE AND QUALITY AND THAT ONLY ONE MANUFACTURER SHALL BE USED THROUGHOUT THE WORK.
    - E. PLATES: SHALL BE MATCHING TYPE FOR FINISHED AREAS AND GALVANIZED STEEL FOR AREAS WITH EXPOSED CONDUIT. PROVIDE STAINLESS STEEL PLATES FOR FLUSH MOUNTED DEVICES. PROVIDE CAST ALUMINUM WET LOCATION TYPE COVER PLATES WITH HINGED COVERS FOR DEVICES LOCATED OUTSIDE. GANG OUTLETS GROUPED TOGETHER UNDER A SINGLE WALL PLATE.
    - F. INCANDESCENT DIMMERS: 120V SLIDE TO OFF, DECORA STYLE SIMILAR TO SWITCHES, WITH WATTAGE AS REQUIRED PER MANUFACTURER'S RECOMMENDATIONS. POWER FAILURE MEMORY. RFI SUPPRESSION. WHERE SWITCHES ARE SHOWN NEXT TO DIMMERS, PROVIDE MULTI-GANG COVER PLATES. PROVIDE DIMMERS WITH IVORY FINISH, SAME AS SWITCHES UNLESS OTHERWISE DIRECTED.
    - G. INSTALL WIRING DEVICES AND ACCESSORIES PLUMB AND LEVEL, IN ACCORDANCE WITH MANUFACTURER'S WRITTEN INSTRUCTIONS, APPLICABLE REQUIREMENTS OF NEC AND IN ACCORDANCE WITH RECOGNIZED INDUSTRY PRACTICES TO FULFILL PROJECT REQUIREMENTS.
    - H. TIGHTEN CONNECTORS AND TERMINALS, INCLUDING SCREWS AND BOLTS, IN ACCORDANCE WITH EQUIPMENT MANUFACTURER'S PUBLISHED TORQUE VALUES FOR WIRING DEVICES.
    - I. COORDINATE WITH OTHER WORK, INCLUDING PAINTING, ELECTRICAL BOXES AND WIRING INSTALLATIONS, AS NECESSARY TO INTERFACE INSTALLATION OF WIRING DEVICES WITH OTHER WORK.
    - J. INSTALL WIRING DEVICES AFTER WIRING WORK IS COMPLETED. INSTALL ONLY IN ELECTRICAL BOXES THAT ARE CLEAN; FREE FROM EXCESS BUILDING MATERIALS, DIRT, AND DEBRIS. INSTALL WALL PLATES AFTER PAINTING WORK IS COMPLETED.
    - K. NO RECEPTACLE OR SWITCH OUTLETS SHALL BE MOUNTED BACK TO BACK. A MINIMUM OF ONE (1) STUD MUST BE BETWEEN OUTLETS.
    - L. INSTALL RECEPTACLES WITH GROUND PIN UP. INSTALL SWITCHES WITH THE "ON" POSITION UP.
    - M. ALL EXTERIOR DEVICES TO BE WEATHER PROOF AND EXTERIOR RECEPTACLES SHALL BE A GFCI TYPE DEVICE.
    - N. ALL 120-VOLT RECEPTACLES OUTLETS LOCATED WITHIN SIX FEET OF SINKS SHALL HAVE GROUND FAULT CIRCUIT INTERRUPTION PROTECTION. GROUND FAULT OUTLETS SHALL BE CONNECTED ON DEDICATED NEUTRAL WIRE SERVING ONLY THE INDIVIDUAL OUTLET WITH THE GROUND FAULT PROTECTION.
    - O. USE JUMBO SIZE WALL PLATES FOR OUTLETS INSTALLED IN MASONRY WALLS.
    - P. DO NOT SHARE NEUTRAL CONDUCTORS ON DIMMERS.
22. PANELBOARD: PANELBOARDS SHALL BE GE TYPE AL, AQ, OR AE OR APPROVED EQUAL. REFER TO CONSTRUCTION DOCUMENTS FOR THE TYPE AND NUMBER OF BRANCH CIRCUIT BREAKERS. ALL PANELBOARD BUSSING SHALL BE COPPER. PANELBOARDS SHALL BE IN OUTDOOR ENCLOSURE WHERE INSTALLED OUTDOOR. MINIMUM INTERRUPTING RATING FOR PANELS SHALL BE AS INDICATED ON DRAWINGS.
23. TRANSFORMERS: DRY TYPE, TWO_WINDING OF THE SIZE AND ELECTRICAL CHARACTERISTICS SHOWN AND SCHEDULED ON DRAWINGS. TRANSFORMERS SHALL BE EQUIPPED WITH 2 2-1/2% TAPS ABOVE AND BELOW RATING. TRANSFORMERS SHALL HAVE A BONDING JUMPER INSTALLED BETWEEN THE SECONDARY NEUTRAL TERMINAL AND METAL CASE, AND SHALL INCLUDE A GROUND TERMINAL OF PROPER SIZE TO RECEIVE GROUND CONDUCTOR. TRANSFORMERS SHALL BE RATED AT FULL LOAD IN A 40°C AMBIENT WITH 30°C ULTIMATE HOT SPOT TEMPERATURE RISE ALLOWANCE, WITH CLASS F INSULATION HAVING A UL 185°C RATING LIMITING SYSTEM TEMPERATURE TO 115°C ON UNITS SMALLER THAN 15 KVA AND CLASS H INSULATION HAVING UL 220°C RATING LIMIT SYSTEM TEMPERATURE TO 150°C ON 15 KVA AND LARGER UNITS. PROVIDE COPPER WINDINGS.
24. FUSES: FUSES IN MAIN, FEEDER, AND BRANCH CIRCUIT SWITCHES, RATED 600 AMPS AND BELOW, FEEDING MOTORS, TRANSFORMERS, AND GENERAL PURPOSE CIRCUITS (UNLESS OTHERWISE SPECIFIED), SHALL BE UL LISTED AND LABELED AS CURRENT LIMITING, TIME-DELAY, 200,000 A.I.C., CLASS RK-5 FUSES SHALL BE BUSSMAN TYPE FRN-R (250V), AND FRS-R (600V).
25. GROUNDING: ALL CONDUIT WORK, MOTOR, STARTERS, AND OTHER ELECTRICAL EQUIPMENT WIRED AND CONNECTED BY THIS CONTRACTOR SHALL BE EFFECTIVELY AND PERMANENTLY GROUNDED IN FULL ACCORDANCE WITH NEC 250.
26. OTHER MATERIALS: FURNISH AND INSTALL ALL OTHER MATERIALS SUCH AS HARDWARE, TAPE, CLAMPS, CONNECTORS, FITTINGS, SUPPORTS, AND ALL OTHER APPURTENANCES REQUIRED TO COMPLETE THE WORK TO THE FULL INTENT OF THE CONTRACT. TERMINAL LUGS SHALL BE FURNISHED BY THE ELECTRICAL CONTRACTOR.
27. ELECTRICAL CONTRACTOR IS RESPONSIBLE FOR ALL TEMPERATURE, CO2, AND HUMIDITY SENSOR STUB-UPS FOR THE MECHANICAL HVAC SYSTEM. REFER TO MECHANICAL PRINTS FOR SENSOR QUANTITY AND LOCATIONS.
28. ELECTRICAL CONTRACTOR WILL CONNECT ALL LOW VOLTAGE PLUMBING CONTRACTOR SUPPLIED TRANSFORMERS (FOR AUTOMATIC FLUSH) TO THE NEAREST 120V CIRCUIT (OR IF INDICATED ON PLANS WITH A CIRCUIT NUMBER). CONTRACTOR TO ASSUME ONE TRANSFORMER PER BATHROOM. THE PLUMBING CONTRACTOR WILL BE RESPONSIBLE FOR LOW VOLTAGE WIRING TO THE FIXTURES.
29. SWITCHGEAR AND DISTRIBUTION PANELS: SHALL BE FIELD MARKED TO WARN QUALIFIED PERSONS OF POTENTIAL ELECTRIC ARC FLASH HAZARDS. THE MARKING SHALL BE LOCATED SO AS TO BE CLEARLY VISIBLE TO QUALIFIED PERSONS BEFORE EXAMINATION, ADJUSTMENT, SERVICING, OR MAINTENANCE OF THE EQUIPMENT, NEC 110.16.
30. ELECTRICAL CONTRACTOR IS RESPONSIBLE FOR COORDINATING THE LOCATIONS OF ALL GTD'S (GENERATOR TRANSFER DEVICES), LIGHTING CONTROL EQUIPMENT, LOW VOLTAGE TRANSFORMERS AND OTHER ELECTRICAL ITEMS WHICH ARE ABOVE CEILINGS. THESE DEVICES SIMILAR TO ELECTRICAL JUNCTION BOXES ARE NOT ALLOWED BY NEC TO BE ABOVE HARD CEILINGS. THE ARCHITECT/OWNER WILL NOT ALLOW THE INSTALLATION OF ACCESS PANELS IN THE CEILINGS. BE AWARE THAT EQUIPMENT IN THOSE AREAS OF HARD CEILINGS WILL HAVE TO BE REMOTELY LOCATED TO THE NEAREST ACOUSTICAL LAY-IN CEILING AREAS.
31. ELECTRICAL MATERIAL AND EQUIPMENT: NO ELECTRICAL MATERIALS, APPARATUS, DEVICES, APPLIANCES, FIXTURES, OR EQUIPMENT SHALL BE SOLD OR INSTALLED IN THE CITY UNLESS THEY ARE IN CONFORMANCE WITH THE PROVISIONS OF THIS CODE, THE LAWS OF THE STATE OF TEXAS AND ANY APPLICABLE RULES AND REGULATIONS ISSUED UNDER THE AUTHORITY OF THE STATE STATUTES. THE MAKER'S NAME, TRADEMARK, OR OTHER IDENTIFICATION SYMBOL SHALL BE PLACED ON ALL ELECTRICAL MATERIALS, APPARATUS, DEVICES, APPLIANCES, FIXTURES, AND EQUIPMENT USED OR INSTALLED UNDER THE PROVISIONS OF THIS CODE. ALL ELECTRICAL MATERIALS AND EQUIPMENT SHALL BE LISTED AND LABELED FOR THE INTENDED USE AND SHALL BE INCLUDED IN A LIST PUBLISHED BY AN APPROVED AGENCY.
32. THE ELECTRICAL CONTRACTOR IS RESPONSIBLE FOR COORDINATING ALL CONDUIT ROUTING TO ANY MECHANICAL ROOF TOP EQUIPMENT AND ROUTE THE CONDUIT THRU THE EQUIPMENT CURB SO THERE IS NOT A SEPARATE ROOF PENETRATION.

ELECTRICAL SYMBOL LEGEND

SYMBOL	DESCRIPTION
PANEL-XX	HOME RUN TO INDICATED PANEL AND CIRCUIT NUMBER REFER TO PANEL SCHEDULE FOR BRANCH CIRCUIT INFORMATION, INCLUDING: BREAKER RATING, WIRE SIZE/QUANTITY, AND CONDUIT SIZE/TYPE
XX	ROUND LUMINAIRE RECESSED OR SUSPENDED FROM ABOVE OPEN = DOWN-LIGHT, HALF-SHADED = WALL-WASHER XX = TYPE ON LUMINAIRE SCHEDULE
XX	ROUND WALL-MOUNTED LUMINAIRE SUSPENDED FROM SIDE ARM XX = TYPE ON LUMINAIRE SCHEDULE
XX	24"X48" TROFFER LUMINAIRE RECESSED OR SUSPENDED FROM ABOVE XX = TYPE ON LUMINAIRE SCHEDULE
XX	EXTERIOR POLE-MOUNTED AREA LIGHT, NUMBER OF HEADS AND SEPARATION ANGLE AS INDICATED ON PLANS AND LUMINAIRE SCHEDULE XX = TYPE ON LUMINAIRE SCHEDULE
X1 X2	EXIT SIGN WITH DIRECTIONAL ARROWS AS INDICATED, 1 OR 2 FACE, UNIVERSAL MOUNT X1 OR X2 = TYPE ON LUMINAIRE SCHEDULE, ALL WITH NICKEL/CADMIUM 90 MINUTE BATTERY BACKUP WITH INTEGRAL TEST SWITCH AND CHARGE INDICATOR LED
XX	EMERGENCY EGRESS ONLY LUMINAIRE SURFACE MOUNTED FROM BACK XX = TYPE ON LUMINAIRE SCHEDULE
	NEMA 5-20R DUPLEX RECEPTACLE, MOUNTED 18" AFF (UON) WP = WEATHER PROOF, GFI = GFCI PROTECTED, IG = ISOLATED GROUND PROVIDE WITH SS-302 COVERPLATE AND CIRCUIT NUMBER
	NEMA 5-20R QUADRAPLEX RECEPTACLE, MOUNTED 18" AFF (UON) WP = WEATHER PROOF, GFI = GFCI PROTECTED, IG = ISOLATED GROUND PROVIDE WITH SS-302 COVERPLATE AND CIRCUIT NUMBER
	NEMA 5-20R GFCI PROTECTED RECEPTACLE WITH INTEGRAL TEST AND RESET SWITCH DUPLEX AND QUADRUPLEX AS INDICATED PROVIDE WITH SS-302 COVERPLATE AND CIRCUIT NUMBER
L6-30R	SIMPLEX RECEPTACLE, MOUNTED 18" AFF (UON) WITH INDICATED CONFIGURATION (E.G. L6-30R = NEMA TWISTLOCK, 250 VAC, 30 A) PROVIDE WITH SS-302 COVERPLATE AND CIRCUIT NUMBER
	FLUSH FLOOR BOX WITH WIRING DEVICES AS INDICATED ON PLANS HUBBELL SYSTEM ONE ONLY
J	JUNCTION BOX
$XX	LIGHT SWITCH RATED 120/277 VAC, MOUNTED 42" AFF (UON), SINGLE-POLE (UON) 2 = 2-POLE, 3 = 3-WAY, 4 = 4-WAY, D = DIMMER, M = MOTOR-RATED W/ OL, WP = WEATHER PROOF, R = RED COLOR, K = KEYED, VS = INTEGRAL VACANCY SENSOR, OS = INTEGRAL OCCUPANCY SENSOR
OS VS	CEILING OR WALL MOUNTED OCCUPANCY / VACANCY SENSOR LIGHTING CONTROL WITH PASSIVE INFRARED AND ULTRASOUND DUAL TECHNOLOGY, 20 A RATED
TV	TV OUTLET 1-GANG BACKBOX, +60" AFF (UON), SS-302 COVER 1"C WITH PULL STRING ROUTED IN CONDUITS BACK TO DATA CENTER MEASURED DEVICES AND LOW-VOLTAGE CABLING BY TELECOM CONTRACTOR
W	WALL TELEPHONE OUTLET 1-GANG BACKBOX, +42" AFF (UON), SS-302 COVER 1"C WITH PULL STRING ROUTED IN CONDUITS BACK TO DATA CENTER MEASURED DEVICES AND LOW-VOLTAGE CABLING BY TELECOM CONTRACTOR
	COMBINATION DATA/VOICE OUTLET 2-GANG BACKBOX, +18" AFF (UON), SS-302 COVER 1"C WITH PULL STRING ROUTED IN CONDUITS BACK TO DATA CENTER MEASURED DEVICES AND LOW-VOLTAGE CABLING BY TELECOM CONTRACTOR.
	MULTIOUTLET ASSEMBLY (PLUG MOLD) AS SPECIFIED ON PLANS WITH DEVICE TYPES AND QUANTITIES INDICATED ON PLANS
EPO	EMERGENCY POWER OFF, MUSHROOM HEAD, MAINTAINED CONTACT PUSH BUTTON
PC	PHOTOELECTRIC SENSOR AIMED NORTH
TC	TIME CLOCK, ASTRONOMIC/MULTI-POLE CONTACTOR
M	POWER COMPANY POWER METER
HA	LIGHTING CLASS PANEL HA = PANEL NAME CHARACTERISTICS AS INDICATED ON ONE LINE DIAGRAM AND PANEL SCHEDULE
DA	DISTRIBUTION CLASS PANEL DA = PANEL NAME CHARACTERISTICS AS INDICATED ON ONE LINE DIAGRAM
	CONDUIT TURNING UP CONDUIT TURNING DOWN
OH	WEATHER HEAD FOR CONNECTING OVER HEAD CONDUCTORS
	20" Cu CHATWORTH GROUNDING BUSBAR 40153-020 TMGB PATTERN, 4" W x 1/4" H, 20"L, INSULATED STANDOFFS, PRE-DRILLED & TAP AS REQUIRED FOR CONDUCTORS
LC CHA 24 COIL 277 VAC 30 AS 12 P NEMA-1	LIGHTING CONTACTOR CHA = CONTACTOR NAME, COIL = COIL CONTROL VOLTAGE, VAC = VOLTAGE RATING, AS = CURRENT RATINGS, P = POLE COUNT, NEMA-# = ENCLOSURE TYPE
240 VAC 60 AF 60 AT CB 3 P NEMA-1	CIRCUIT BREAKER, MOLDED-CASE, THERMO-MAGNETIC (UON) VAC = VOLTAGE RATING, AF = FRAME SIZE, AT = TRIP SETTING, P = POLE COUNT, NEMA- = ENCLOSURE TYPE (WHEN APPLICABLE)
240 VAC 60 AF 60 AF 3 P NEMA-1	DISCONNECT SWITCH VAC = VOLTAGE RATING, AS = SWITCH CURRENT RATING AF = FUSE SIZE/TYPE (E.G. DETD), NF = NON-FUSIBLE P = POLE COUNT, NEMA- = ENCLOSURE TYPE (WHEN APPLICABLE)
240 VAC 60 AF 40 AT #1 3 P NEMA-1 HOA	COMBINATION CIRCUIT BREAKER, MOTOR CONTROLLER, AND THERMAL OVERLOAD VAC = VOLTAGE RATING, AF = FRAME SIZE, AT = TRIP SETTING, NEMA-# = MOTOR STARTER SIZE/TYPE (E.G. FVNR), HOA = SELECTOR SWITCH TYPE, P = POLE COUNT, NEMA- = ENCLOSURE TYPE (WHEN APPLICABLE)
TLA DRY-TYPE 480Δ : 208Y/120 VAC 45 KVA NEMA-2	TRANSFORMER = TLA TRANSFORMER NAME TYPE = TRANSFORMER TYPE (E.G. DRY-TYPE, HARMONIC-MITIGATING...), VAC = WINDING VOLTAGES (PRIMARY : SECONDARY), KVA = CONTINUOUS CAPACITY, TAPS = QUANTITY/DEVIATION OF TAPS, RISE = TEMP RISE, INSUL = INSULATION CLASS, WOUND = WINDING MATERIAL/CONFIGURATION, NEMA- = ENCLOSURE TYPE
VFD	VARIABLE FREQUENCY DRIVE WITH INTEGRAL DISCONNECTING MEANS, VFCI
HP	MOTOR, SINGLE OR THREE PHASE HP = HORSE POWER
	EQUIPMENT CONNECTION

ABBREVIATION DEFINITIONS

2S1W	TWO-SPEED, ONE-WINDING MOTOR
2S2W	TWO-SPEED, TWO-WINDING MOTOR
(A)	ABANDONED TO REMOVE
A	PHASE "A" IN THREE-PHASE SYSTEM
A	AMPERES
AF	AMPERE FUSE OR FRAME RATING
AFCI	ARC FAULT CIRCUIT INTERRUPTER
AFF	ABOVE FINISHED FLOOR
AFG	ABOVE FINISHED GRADE
Ag	SILVER
AL	ALUMINUM
AT	AMPERE TRIP SETTING
Au	GOLD
B	PHASE "B" IN THREE-PHASE SYSTEM
BF	BALLAST FACTOR
BFC	BELOW FINISHED CEILING
BFF	BELOW FINISHED FLOOR
BFG	BELOW FINISHED GRADE
C	PHASE "C" IN THREE-PHASE SYSTEM
C	CONDUIT
CB	CIRCUIT BREAKER
CH	CONSTANT HORSE POWER (2S1W MOTOR)
CKT	CIRCUIT
CS	COMBINATION STARTER (MOTOR STARTER / DISCONNECT)
CT	CONSTANT TORQUE (2S1W MOTOR)
CT	CURRENT TRANSFORMER
Cu	COPPER
(D)	EXISTING TO BE DEMOLISHED AND REMOVED
DETD	DUAL ELEMENT, TIME DELAY
DS	DISCONNECT SWITCH
(E)	EXISTING TO REMAIN
EGC	EQUIPMENT GROUNDING CONDUCTOR
EMT	ELECTRICAL METALLIC TUBING
EPM	ELECTRONIC POWER METER
EPR	ETHYLENE PROPYLENE RUBBER
FAAP	FIRE ALARM ANNUNCIATOR PANEL
FACP	FIRE ALARM CONTROL PANEL
Fe	IRON
FRP	FIBERGLASS REINFORCED POLYESTER
FVNR	FULL VOLTAGE NON-REVERSING
G	GROUND
GEC	GROUNDING ELECTRODE CONDUCTOR
GFI/GFCI	GROUND FAULT CIRCUIT INTERRUPTER
HMT	HARMONIC-MITIGATING TRANSFORMER
HOA	HAND / OFF / AUTO SWITCH (FOR FVNR CONTACTOR)
HLOA	HIGH / LOW / OFF / AUTO (FOR 2S1W OR 2S2W CONTACTOR)
IG	ISOLATED GROUND
IMC	INTERMEDIATE METAL CONDUIT
J/R	JAMMING RATIO
KAIC	KILO AMPERE INTERRUPTING CAPACITY
KCMIL	KILO CIRCULAR MILS
KVA	KILO VOLT AMPERES COMPLEX OR APPARENT POWER
KVAR	KILO VOLT AMPERES REACTIVE POWER
KW	KILO WATT REAL POWER
L1, L2	HOT LEG 1, 2 IN SINGLE-PHASE SYSTEM < 250 VAC
LSI+G	LONG TERM, SHORT TERM, INSTANTANEOUS, AND GROUND-FAULT
MCB / MF	MAIN CIRCUIT BREAKER / MAIN FUSE
MCC	MOTOR CONTROL CENTER
MLO	MAIN LUGS ONLY
(N)	NEW
N	NEUTRAL
NEC	NATIONAL ELECTRICAL CODE (NFPA 70)
NEMA	NATIONAL ELECTRICAL MANUFACTURERS ASSOCIATION
NF	NON-FUSIBLE
NFPA	NATIONAL FIRE PROTECTION ASSOCIATION
NSL	NON-SWITCHED HOT LEG
OFCI	OWNER FURNISHED, CONTRACTOR INSTALLED
OS	OCCUPANCY SENSOR
P	POLES
PC	POLYCARBONATE
PF	POWER FACTOR
PFCC	POWER FACTOR CORRECTION CAPACITOR
PVC	POLY VINYL CHLORIDE (RNC CONDUIT)
PVDF	POLYVINYLIDENE FLUORIDE
PT	POTENTIAL TRANSFORMER
RAL	RIGID ALUMINUM
RGS	RIGID GALVANIZED STEEL
RMC	RIGID METAL CONDUIT
SEC	SECTION OF LIGHTING-CLASS PANEL
SF6	SULFUR HEXAFLOURIDE INSULATING GAS
Sn	TIN
SPD	SURGE PROTECTION DEVICE
SS-xxx	STAINLESS STEEL, "xxx" = ALLOY TYPE (E.G. 304, 316)
ST	SHUNT-TRIP FOR CIRCUIT BREAKER
THD	TOTAL HARMONIC DISTORTION
TVSS	TRANSIENT VOLTAGE SURGE SUPPRESSION
TYP	TYPICAL
UON	UNLESS OTHERWISE NOTED
XLPE	CROSS-LINKED POLYETHYLENE
XLPO	CROSS-LINKED POLYOLEFIN
V	VOLTS
VAC	VOLTS, ALTERNATING CURRENT
VDC	VOLTS, DIRECT CURRENT
VFCI	VENDOR FURNISHED, CONTRACTOR INSTALLED
VFD	VARIABLE FREQUENCY DRIVE
VS	VACANCY SENSOR
VT	VARIABLE TORQUE (2S1W MOTOR)
W	WIRES, NOT INCLUDING EGC
WP	WEATHER PROOF
#	AMERICAN WIRE GAGE
Ø	PHASE
μF	MICRO FARAD
Ω	OHMS

GENERAL NOTES:

1. SYMBOL LEGEND MAY CONTAIN SYMBOLS THAT ARE NOT USED ON ALL DRAWINGS.
2. ABBREVIATION DEFINITIONS ARE NOT COMPREHENSIVE, AND NOT ALL ABBREVIATIONS MAY APPLY TO ALL DRAWINGS. SUBMIT FORMAL REQUEST FOR INFORMATION WHEN ENCOUNTERING CONFLICTS OR AMBIGUOUS SYMBOLS OR ABBREVIATIONS, AS THESE WILL NOT CONSTITUTE DISMISSAL OF CONTRACTOR RESPONSIBILITY.
3. ALL COVER PLATES FOR RECEPTACLES, SWITCHES, AND DATA SHALL BE SS-302 (UON).
4. PROVIDE DECORA TYPE SWITCHES FOR LIGHT SWITCHES THAT ARE NOT OCCUPANCY SENSOR TYPE.

GENERAL COORDINATION NOTES

COORDINATE WITH FIRE SPECIFICATIONS AND INSTALLING CONTRACTOR FOR CONSTRUCTION SHOP DRAWINGS ALL EXPOSED (OR ABOVE HARD CEILINGS) LOW VOLTAGE FIRE ALARM WIRING WILL BE ROUTED BACK TO THE FACP ROOM IN EMT CONDUIT. THE CONTRACTOR WILL BE RESPONSIBLE FOR SIZING AND ROUTING: PAINT AND LABEL AS REQUIRED BY ARCHITECT.

COORDINATE WITH SECURITY SPECIFICATIONS AND INSTALLING CONTRACTOR FOR CONSTRUCTION SHOP DRAWINGS ALL LOW VOLTAGE SECURITY ALARM WIRING WILL BE ROUTED BACK TO THE MDF ROOM IN EMT CONDUIT. THE CONTRACTOR WILL BE RESPONSIBLE FOR SIZING AND ROUTING: PAINT AND LABEL AS REQUIRED BY ARCHITECT.

REFER TO DIVISION 28 DRAWINGS AND SPECIFICATIONS AND COORDINATE WITH DIVISION 28 FOR ADDITIONAL CONDUIT AND PATHWAY REQUIREMENTS.

TELECOM COORDINATION NOTES

COORDINATE WITH CABLING CONTRACTOR FOR CONSTRUCTION SHOP DRAWINGS ALL LOW VOLTAGE DATA CABLES WILL BE ROUTED BACK TO THE CABLE TRAY IN MINIMUM 1"C EMT THE CONTRACTOR WILL BE RESPONSIBLE FOR SIZING AND ROUTING UNDER THE FOLLOWING PRETENSES:

- CABLE TRAY AND OR WIRE NOT IN CONDUIT IS NOT ALLOWED IN ANY EXPOSED AREAS
- NO MORE THAN 100' BETWEEN PULL BOXES.
- NO MORE THAN 270 DEGREES OF TURNS BETWEEN PULL BOXES
- UTILIZE SWEEPING BENDS
- PULL BOXES MUST NOT BE USED AS TURNS. THE BEND MUST COME BEFORE OR AFTER THE PULL BOX.
- ALL EXPOSED CONDUITS ARE TO BE PAINTED PER ARCHITECT COLOR SELECTION. CONDUITS /JUNCTION BOXES MUST BE LABELED WITH WHAT ROOM NUMBERS THEY ARE FEEDING AND WHAT SYSTEM.
- CONDUITS SHOULD BE ROUTED AT HIGH LEVEL TO EITHER SIDE OF THE CORRIDOR.
- ELECTRICAL CONTRACTOR WILL COORDINATE THE SIZES AND ROUTING WITH THE DATA CONTRACTOR AND OTHER TRADES PRIOR TO INSTALLING.
- ALL CONDUITS WILL BE INSTALLED WITH MEASURED PULL TAPE

REFER TO DIVISION 27 DRAWINGS AND SPECIFICATIONS AND COORDINATE WITH DIVISION 27 VENDOR FOR ADDITIONAL CONDUIT AND PATHWAY REQUIREMENTS.

APPLICABLE CODES

- 2015 INTERNATIONAL BUILDING CODE (IBC)
- 2023 NATIONAL ELECTRICAL CODE (NEC)
- 2015 INTERNATIONAL ENERGY CONSERVATION CODE (IECC)
- 2015 INTERNATIONAL FIRE CODE (IFC)

FSGROUP ARCHITECTS
13105 Northwest Fwy Suite 1110
Houston Texas 77040
713 344 1752 Office
www.fsdesignbuild.com

PROJECT NAME

THE STATE OF TEXAS
FORT BEND COUNTY

INFORMATION TECHNOLGY BUILDING
EUGENE HEIMANN CIRCLE
FORT BEND COUNTY , TEXAS

CONSULTANTS

Infrastructure Associates
INFRASTRUCTURE ASSOCIATES, INC.
6117 RICHMOND AVENUE, SUITE 200
HOUSTON, TEXAS 77057-6267
(713) 622-0120 PH (713) 622-0557 FAX
TBPE FIRM REGISTRATION #F-4506
WWW.IAHOUSTON.COM

PROFESSIONAL SEAL

STATE OF TEXAS
SEVAK KALANTARIANS
97498
LICENSED
PROFESSIONAL ENGINEER
2024-05-15

ISSUED FOR

ISSUED FOR PROPOSALS AND PERMIT

REVISIONS

No.	DESCRIPTION	DATE

KEY PLAN

TRUE
NORTH

SHEET TITLE

NOTES AND LEGEND

SCALE: NOT TO SCALE

DATE: 05/15/2024

PROJECT NUMBER: 2319

SHEET NUMBER

E101

LIGHT FIXTURE SCHEDULE

TYPE	MANUFACTURER	MODEL NUMBER	DESCRIPTION	MOUNTING	LAMP	WATTAGE	VOLTAGE	DIMMABLE	NOTES
A	ALPHABET LIGHTING	NU3-RDT-SW-15LM-35K-90-55D-HET-WH-NC-UNV-DIM10	3" ROUND DOWNLIGHT - TRIMLESS	RECESSED	LED 3500K	13 W	UNV	0-10V DIMMING	
AE	ALPHABET LIGHTING	NU3-RDT-SW-15LM-35K-90-55D-HET-WH-NC-UNV-DIM10	3" ROUND DOWNLIGHT - TRIMLESS - EMERGENCY	RECESSED	LED 3500K	13 W	UNV	0-10V DIMMING	
AX	ALPHABET LIGHTING	NU3-RD-SW-15LM-35K-90-55D-HET-WH-WH-NC-UNV-DIM10	3" RECESSED ROUND DOWNLIGHT - EXTERIOR	RECESSED	LED 3500K	13 W	UNV	0-10V DIMMING	ARCHITECT TO CONFIRM WHITE BEZEL AND TRIM FINISHES.
AXE	ALPHABET LIGHTING	NU3-RD-SW-15LM-35K-90-55D-HET-WH-WH-NC-UNV-DIM10	3" RECESSED ROUND DOWNLIGHT - EXTERIOR - EMERGENCY	RECESSED	LED 3500K	13 W	UNV	0-10V DIMMING	ARCHITECT TO CONFIRM WHITE BEZEL AND TRIM FINISHES.
B	ALPHABET LIGHTING	BETA-6R-SW-20LM-35K-90-HE60-[FINISH]-[BEZEL FINISH]-AC8-UNV-DIM10	6" CYLINDER PENDANT DOWNLIGHT	PENDANT	LED 3500K	15 W	UNV	0-10V DIMMING	
BE	ALPHABET LIGHTING	BETA-6R-SW-20LM-35K-90-HE60-[FINISH]-[BEZEL FINISH]-AC8-UNV-DIM10	6" CYLINDER PENDANT DOWNLIGHT - EMERGENCY	PENDANT	LED 3500K	15 W	UNV	0-10V DIMMING	
BX	BEGA	B84691 K4	4' LED BOLLARD	BOLLARD	LED 4000K	30 W	UNV		
C	LITHONIA	CLX L96 8000LM SEF FDL WD MVOLT GZ10 35K 80CRI [FINISH] MOUNTING ACCESSORIES: HC36 M12	8'-0" LED STRIP LIGHT - CHAIN HUNG	SUSPENDED	LED 3500K	52 W	UNV	0-10V DIMMING	
CE	LITHONIA	CLX L96 8000LM SEF FDL WD MVOLT GZ10 35K 80CRI [FINISH] MOUNTING ACCESSORIES: HC36 M12	8'-0" LED STRIP LIGHT - CHAIN HUNG - EMERGENCY	SUSPENDED	LED 3500K	52 W	UNV	0-10V DIMMING	
D2	MARK LIGHTING	SLILP-CPP-[LENGTH]FT-4GDI-[CLG TRIM]-90CRI-35K-[LUMENS]-MINI-MVOLT-[TRIM FINISH]-NLIGHT	1" LINEAR - PATTERN	PENDANT	LED 3500K	0 W	UNV	0-10V DIMMING	REFER TO PLANS FOR PATTERN CONFIGURATIONS AND LENGTHS.
D3	ALIGHT	ACL2ST-6-1LH+DLH-35-CRI-U-BW+BW-S-0[FINISH-RAL#]-1-D	2" DIRECT/INDIRECT LINEAR - 6'-0" PENDANT	PENDANT	LED 3500K	116 W	UNV	0-10V DIMMING	
E1	ALIGHT	D5-[LENGTH]-LS-35-CRI-U-HE-G-D	3" LINEAR - TRIMLESS	RECESSED/WALL	LED 3500K	34 W	UNV	0-10V DIMMING	LIGHT FIXTURE TO BE INSTALLED VERTICALLY INTO PARTITION AND TO ALIGN WITH TYPE G3 [CEILING SURFACE MOUNTED LINEAR]. REFER TO ARCHITECTURAL ELEVATIONS FOR RUN LENGTHS. LIGHT FIXTURE TO BE INSTALLED VERTICALLY INTO PARTITION AND TO ALIGN WITH TYPE G3 [CEILING SURFACE MOUNTED LINEAR]. REFER TO ELEVATIONS FOR RUN LENGTHS.
E3E	ALIGHT	ALD3ST-CP-LS-35-CRI-U-HE-S-0[FINISH-RAL#]-D	3" DIRECT LINEAR PENDANT - PATTERN - EMERGENCY	PENDANT	LED 3500K		UNV	0-10V DIMMING	REFER TO PLANS FOR PATTERN CONFIGURATIONS AND LENGTHS.
F	AALINE	CEILING GRID SYSTEM: CRS-GR-A-[SYSTEM LENGTH]-[SYSTEM WIDTH]-06-[WOOD]-[CLEAR FINISH]-ALBR-[CABLE LENGTH]-IN LIGHT FIXTURE: CRS-GR-L-[LENGTH]-1-DN-AG-BW-1-35-010-[WOOD]-[CLEAR FINISH]-NA-[CANOPY FINISH]-B-[CABLE LENGTH]-IN	WOOD SLAT CEILING SYSTEM WITH INTEGRATED LINEAR WOOD PENDANTS	PENDANT	LED	88 W	UNV	0-10V DIMMING	ARCHITECT TO PROVIDE WOOD AND SYSTEM COMPONENTS FINISH SELECTIONS. REFER TO PLANS FOR WOOD GRID CEILING SYSTEM AND LIGHT FIXTURE CONFIGURATIONS.
FE	AALINE	CEILING GRID SYSTEM: CRS-GR-A-[SYSTEM LENGTH]-[SYSTEM WIDTH]-06-[WOOD]-[CLEAR FINISH]-ALBR-[CABLE LENGTH]-IN LIGHT FIXTURE: CRS-GR-L-[LENGTH]-1-DN-AG-BW-1-35-010-[WOOD]-[CLEAR FINISH]-NA-[CANOPY FINISH]-B-[CABLE LENGTH]-IN	WOOD SLAT CEILING SYSTEM WITH INTEGRATED LINEAR WOOD PENDANTS - EMERGENCY	PENDANT	LED	88 W	UNV	0-10V DIMMING	ARCHITECT TO PROVIDE WOOD AND SYSTEM COMPONENTS FINISH SELECTIONS. REFER TO PLANS FOR WOOD GRID CEILING SYSTEM AND LIGHT FIXTURE CONFIGURATIONS.
G1	ALIGHT	ABV-3-8'-LS-35K-CRI-U-M-HE-24-S-EF-[FINISH]-[ACOUSTIC FINISH]-1-D	3" DIRECT ACOUSTIC LINEAR - 8'-0" PENDANT	PENDANT	LED 3500K	35 W	UNV	0-10V DIMMING	
G1E	ALIGHT	ABV-3-8'-LS-35K-CRI-U-M-HE-24-S-EF-[FINISH]-[ACOUSTIC FINISH]-1-D	3" DIRECT ACOUSTIC LINEAR - 8'-0" PENDANT - EMERGENCY	PENDANT	LED 3500K	35 W	UNV	0-10V DIMMING	
G2	ALIGHT	ABV-3-8'-LS-35K-CRI-U-M-HE-12-S-EF-[FINISH]-[ACOUSTIC FINISH]-1-D	3" DIRECT ACOUSTIC LINEAR - 8'-0" PENDANT	PENDANT	LED 3500K	40 W	UNV	0-10V DIMMING	
G2E	ALIGHT	ABV-3-8'-LS-35K-CRI-U-M-HE-12-S-EF-[FINISH]-[ACOUSTIC FINISH]-1-D	3" DIRECT ACOUSTIC LINEAR - 8'-0" PENDANT - EMERGENCY	PENDANT	LED 3500K	40 W	UNV	0-10V DIMMING	
H	LITHONIA	CPX-2X4-4000LM-90CRI-35K-SWL-MIN1-ZT-MVOLT-NLIGHT	2'X4' LED FLAT PANEL	RECESSED	LED 3500K	36 W	UNV	0-10V DIMMING	
HE	LITHONIA	CPX-2X4-4000LM-90CRI-35K-SWL-MIN1-ZT-MVOLT-NLIGHT	2'X4' LED FLAT PANEL - EMERGENCY	RECESSED	LED	36 W	UNV	0-10V DIMMING	
IX	HYDREL	MC9740C S LED P3 40K MVOLT NFL FLC20SR	FLUSH INGRADE FLAGPOLE UPLIGHTS	INGRADE	LED 4000K	30 W	UNV		
J	OCL LIGHTING	RV1-P1DB-36-MW-[FINISH]-LED1-935K-UNV-100-DM1	3'-0" RING PENDANT	PENDANT	LED 3500K	32 W	UNV	0-10V DIMMING	
JE	OCL LIGHTING	RV1-P1DB-36-MW-[FINISH]-LED1-935K-UNV-100-DM1	3'-0" RING PENDANT - EMERGENCY	PENDANT	LED 3500K	32 W	UNV	0-10V DIMMING	
K1	AALINE	LW-EB-X3-2'-DN-1-35K-1-010-[FINISH]-[CLEAR FINISH]-[CANOPY FINISH]-[CABLE COLOR]-[CABLE LENGTH]-IN	2'-0" X - SPOKE LINEAR PENDANT	PENDANT	LED	33 W	UNV	0-10V DIMMING	
K2	AALINE	LW-EB-X3-4'-DN-1-35K-1-010-[FINISH]-[CLEAR FINISH]-[CANOPY FINISH]-[CABLE COLOR]-[CABLE LENGTH]-IN	4'-0" X - SPOKE LINEAR PENDANT	PENDANT	LED	132 W	UNV	0-10V DIMMING	
LE	BLACKJACK LIGHTING	TSL9-46IN-2DRV-50W-35K-MVOLT-OP-FINISH-EMB310	46" LED VANDAL RESISTANT FIXTURE - EMERGENCY	WALL	LED 3500K	58 W	MVOLT		PROVIDE WITH EMERGENCY BATTERY PACK
ME	PRUDENTIAL LIGHTING	BPR02-PER-REG1-LED35-90-LO-R[LENGTH]-PFL-WTW-SC-UNV-X7-DM01	2" PERIMETER LINEAR - TRIMLESS - EMERGENCY	RECESSED	LED 3500K	0 W	UNV	0-10V DIMMING	REFER TO ARCHITECTURAL PLANS FOR RUN LENGTHS
P	ALUZ LIGHTING	A1-ZADY-STN-F-[FINISH]-35K-3W-10V-EF-DRY-UNV-[ROCKER SWITCH]-[OCCUPANCY SENSOR]-[LENGTH]	UNDERCABINET LINEAR	SURFACE / MILLWORK	LED 3500K	3 W	UNV	0-10V DIMMING	REFER TO PLANS AND ELEVATIONS FOR LOCATION AND RUN LENGTHS.
S	LITHONIA	CSVT-L48-5000LM-MVOLT-35K-80CRI	4' LED VAPORTITE FIXTURE SUITABLE FOR USE IN ELEVATOR SHAFT	SURFACE	LED 3500K	42 W	UNV	NONE	
S3	LITHONIA	RSX2 LED P3 40K R3 HS	TYPE 3 PARKING LOT AREA POLE LIGHT WITH HS	POLE	LED 4000K	147 W	UNV		PROVIDE 30FT TALL, 4" SQUARE POLE
S3X	LITHONIA	RSX2 LED P3 40K R3	TYPE 3 PARKING LOT AREA POLE LIGHT NO HS	POLE	LED 4000K	147 W	UNV		PROVIDE 30FT TALL, 4" SQUARE POLE
S4	LITHONIA	RSX2 LED P3 40K R4S EGFV	TYPE 4 PARKING LOT AREA POLE LIGHT FULL VISOR	POLE	LED 4000K	147 W	UNV		PROVIDE 30FT TALL, 4" SQUARE POLE
S5	LITHONIA	RSX2 LED P3 40K R5 EGFV	TYPE 5 PARKING LOT AREA POLE LIGHT FULL VISOR	POLE	LED 4000K	147 W	UNV		PROVIDE 30FT TALL, 4" SQUARE POLE
WE	LITHONIA	ARC1 LED-P3-40K-MVOLT-E4WH-FINISH	LED WALL PACK - EMERGENCY	WALL	LED	25 W	UNV		
X			EDGE-LIT LED EXIT SIGN WITH NICKEL CADMIUM BATTERY	WALL/CEILING	LED	5 W	UNV	NONE	PROVIDE WITH NUMBER OF FACES AND DIRECTIONAL ARROWS AS SHOWN ON PLANS

LIGHTING NOTES:

1. PROVIDE LIGHT FIXTURES IN STAIRWELLS WITH INTEGRAL BATTERY BACKUP, TEST SWITCH, AND GREEN-LED CHARGING INDICATOR FOR EMERGENCY EGRESS OPERATION. THIS IS IN ADDITION TO THEM BEING CIRCUITED TO EMERGENCY LIGHTING PANEL IN AREA.
2. ALL LIGHT FIXTURES APPENDED WITH E (EMERGENCY) TO HAVE GENERATOR TRANSFER DEVICE FOR AUTOMATIC FULL INTENSITY LIGHTING WHEN NORMAL POWER IS LOST, PROVIDE CONNECTION FROM EMERGENCY LIGHTING PANEL CIRCUIT IN AREA AND UNSWITCHED NORMAL POWER FOR LOSS DETECTION.
3. PROVIDE ADDITIONAL, NON-SWITCHED HOT CIRCUIT LEG TO FIXTURE FOR BATTERY CHARGING AND POWER-LOSS DETECTION FOR ALL EMERGENCY EGRESS OR EXIT SIGN FIXTURES AS PART OF BASE BID.
4. ALL OUTDOOR LIGHTING FIXTURES REQUIRE CORROSION-RESISTANT OPTION.
5. COORDINATE MOUNTING HEIGHT OF ALL FIXTURES WITH ARCHITECTURAL PLANS.
6. COORDINATE FINISH OF ALL FIXTURE WITH ARCHITECT PRIOR TO ORDERING.
7. REFER TO ARCHITECTURAL PLANS FOR GRID/FLANGE AREAS, PRIOR TO BIDDING OF LIGHT FIXTURES. ORDER CORRECT QUANTITY OF EACH VARIATION.
8. ALL (10) ADDITIONAL EXIT SIGNS (TYPE 'X') FIXTURES NOT SHOWN ON PLANS WITH CIRCUITING FOR FIRE MARSHALL WALK.

LIGHTING CONTROL COMMISSIONING

1. UPON COMPLETION OF THE INSTALLATION, THE LIGHTING CONTROL SYSTEM SHALL BE COMMISSIONED BY THE MANUFACTURER'S FACTORY AUTHORIZED REPRESENTATIVE WHO WILL VERIFY A COMPLETE FULLY FUNCTIONAL SYSTEM.
2. THE LIGHTING CONTROL SYSTEMS SHALL BE TESTED TO ENSURE THAT CONTROL HARDWARE AND SOFTWARE ARE CALIBRATED, ADJUSTED, PROGRAMMED AND IN PROPER WORKING CONDITION IN ACCORDANCE WITH THE CONSTRUCTION DOCUMENTS AND MANUFACTURER'S INSTRUCTIONS. FUNCTIONAL TESTING SHALL BE IN ACCORDANCE WITH IECC 2015 SECTIONS C408.3.1.1 THROUGH C408.3.1.3 FOR THE APPLICABLE CONTROL TYPE. PROVIDE A DETAILED REPORT TO THE ARCHITECT / COMMISSIONING AGENT.
3. THE ELECTRICAL CONTRACTOR SHALL REQUEST FACTORY COMMISSIONING BY SUBMITTING A STARTUP REQUEST FORM AT LEAST FOUR WEEKS BEFORE STARTUP IS REQUIRED.
4. THE ELECTRICAL CONTRACTOR SHALL PROVIDE AT LEAST ONE JOURNEYMAN ELECTRICIAN, FAMILIAR WITH THE INSTALLATION OF THE SYSTEM, DEDICATED TO ASSISTING THE FACTORY START-UP TECHNICIAN FOR THE ENTIRE DURATION OF THE COMMISSIONING PROCESS.

FIRE ALARM SYMBOLS LEGEND

Symbol	Description	Symbol	Description
V (XX, P, C)	FIRE ALARM VISUAL STROBE, TYP. +80" AFF TO TOP. XX = CANDELA LEVEL, P = PROTECTIVE COVER, C = CEILING MOUNT	FACP	FIRE ALARM CONTROL PANEL
AV (XX, P, C)	FIRE ALARM AUDIO/VISUAL STROBE, TYP. +80" AFF TO TOP. XX = CANDELA LEVEL, P = PROTECTIVE COVER, C = CEILING MOUNT	FAAP	FIRE ALARM ANNUNCIATOR PANEL
SV (XX, P, C)	FIRE ALARM SPEAKER/VISUAL STROBE, TYP. +80" AFF TO TOP. XX = CANDELA LEVEL, P = PROTECTIVE COVER, C = CEILING MOUNT	FCPS	REMOTE FIRE ALARM SYSTEM POWER SUPPLY
M (P, PD)	FIRE ALARM MANUAL PULLSTATION, TYP. +48" AFF PD = PEDESTAL MOUNT, P = PROTECTIVE COVER	DACT	DIGITAL ALARM COMMUNICATOR TRANSMITTER
SD	FIRE ALARM SMOKE DETECTOR, PHOTOELECTRIC	MSD	FIRE ALARM SMOKE FIRE DAMPER BY DIV. 15 PROVIDE 120VAC CIRCUIT BY DIV. 16
SD (S)	FIRE ALARM SINGLE STATION SMOKE DETECTOR 120V WITH BATTERY	CM	FIRE ALARM CONTROL MODULE
HD	FIRE ALARM HEAT DETECTOR	MM	FIRE ALARM MONITOR MODULE
BD	FIRE ALARM BEAM DETECTOR	DH	FIRE ALARM DOOR HOLDER
CO	FIRE ALARM CARBON MONOXIDE DETECTOR	FS	FIRE ALARM SPRINKLER FLOW SWITCH
DD	FIRE ALARM DUCT SMOKE DECECTOR WITH REMOTE LED	TS	FIRE ALARM SPRINKLER VALVE TAMPER SWITCH
R	FIRE ALARM SHUTDOWN RELAY FOR HVAC EQUIPMENT	A	FIRE ALARM SPEAKER

FIRE ALARM TYPICAL SYSTEM DIAGRAM

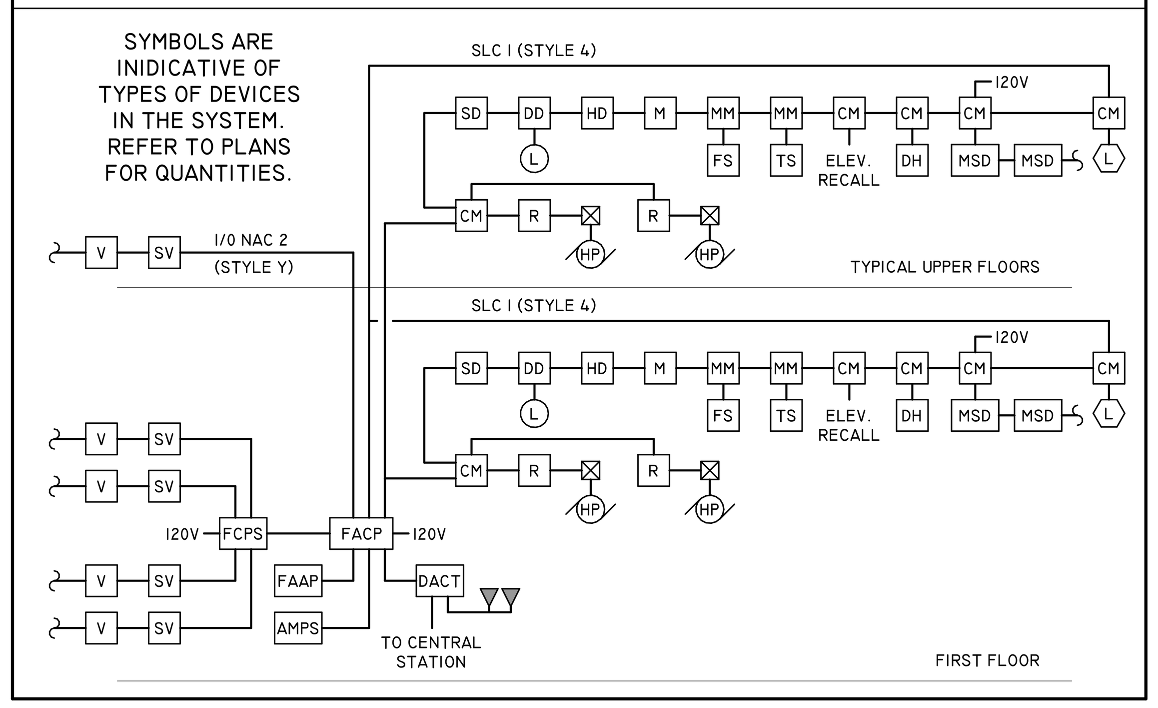

FIRE ALARM DELEGATED DESIGN NOTE

THE BIDDING CONTRACTOR IS RESPONSIBLE FOR A COMPLETE FIRE ALARM SYSTEM DELEGATED-DESIGN. THE CONTRACTOR IS REQUIRED TO PROVIDE ALL DEVICES REQUIRED TO MEET ALL APPLICABLE CODES, PROJECT SPECIFICATIONS REQUIREMENTS, AND THE AHJ REQUIREMENTS. THE CONTRACTOR IS REQUIRED TO COMPLY WITH PERFORMANCE REQUIREMENTS AND DESIGN CRITERIA, INCLUDING SIGNED AND SEALED CALCULATIONS BY A QUALIFIED PROFESSIONAL ENGINEER RESPONSIBLE FOR SHOP DRAWING PREPARATION. THE CONTRACTOR SHALL PRODUCE SHOP DRAWINGS, REQUIRED BATTERY POWER CALCULATIONS, INTERCONNECTION WIRING DIAGRAMS, POWER SUPPLY DESIGN AND REQUIREMENTS, ETC. THESE DOCUMENTS SHALL BE SUBMITTED BY THE CONTRACTOR FOR REVIEW AND/OR APPROVAL BY THE AHJ AND A/E TEAM AS REQUIRED. ALLOW FOR 10% ADDITIONAL DEVICES WITH ASSOCIATED CABLING RESULTING FROM DELEGATED DESIGN.

GENERAL PANEL SCHEDULE NOTES

PANEL SCHEDULES DEPICT ALL LOADS FOR MULTI-SECTION PANELS:

1. PROVIDE MULTIPLE SECTIONS BETWEEN 42 AND 60 POLES TOTALING POLE QUANTITY INDICATED, INCLUSIVE OF SPD IF BRANCH MOUNTED.
2. PROVIDE REQUIRED FEED-THRU LUGS.
3. PROVIDE INTERMEDIATE FEEDERS MATCHING LINE-SIDE FEEDER FOR FIRST SECTION.
4. ALL OPERABLE HANDLES AND CIRCUIT BREAKERS MUST BE LOCATED WITHIN NEC REQUIRED MOUNTING HEIGHTS AFTER PANEL IS FULLY INSTALLED.
5. ALL PANELBOARDS AND DISTRIBUTION PANELBOARDS SHALL HAVE A STABILITY HINGED FRONT COVER. THE PANEL BOX SHALL HAVE ENOUGH LIP TO HOLD THE WEIGHT OF THE FRONT HINGED COVER. BOLTED FRONT COVER IS NOT ALLOWED.
6. ALL WIRING SHALL BE INSTALLED NEAT, ORDERLY AND TIE-WRAP, LABEL THE PHASES AND NEUTRALS CIRCUITS, TYPE WRITTEN HARD PAPER DIRECTORY.
7. ALL GROUNDING WIRING SHALL BE INSTALLED ON A SINGLE GROUND BAR. NO DOUBLE LUGGING.
8. NEUTRALS SHALL BE INSTALLED ON SEPARATE NEUTRAL BAR AND NO OTHER WIRING INSTALLED. REMOVE THE MANUFACTURED GROUNDING SCREWS TO ISOLATE BOTH THE GROUNDING BAR AND NEUTRAL BAR.
9. EACH PANELBOARD SHALL HAVE A HARD STOCK DIRECTORY CARD. A TYPE WRITTEN DIRECTORY CARD IDENTIFYING THE LOAD SERVED BY EACH BRANCH CIRCUIT IN THE FRAME ON THE PANEL DOOR UNDER A CLEAR PLASTIC COVER. SPARES AND SPACES SHALL BE WRITTEN WITH ERASABLE PENCIL FOR FUTURE USE.
10. LABEL ALL CONDUITS, DEAD FRONT COVER, CONDUCTORS IN THE PANEL (PHASE AND NEUTRAL) WITH THE CIRCUIT NUMBERS OF THE LOAD SERVED.
11. ALL NEUTRAL AND GROUNDING CONDUCTORS MUST BE INSTALLED ON SEPARATE GROUND BARS.
12. ALL BRANCH CIRCUIT CONDUCTORS IN THE PANEL, NEUTRAL CONDUCTORS MUST IDENTIFY OR BE LABELED WITH THE CIRCUIT NUMBER OF THE LOAD SERVED.
13. INSTALL SURFACE-MOUNTED CABINETS AND PANELBOARDS WITH A MINIMUM OF FOUR ANCHORS AND MUST MAINTAIN A 1/4" CLEARANCE FROM THE WALL. USE UNISTRUT AS MOUNTING STRUCTURE.
14. USE COPPER BUS BARS IN ALL PANELBOARDS.

GENERAL WIRING / LABELING NOTES

1. PIGTAILING
   - A. CIRCUITING TO ALL NON DEDICATED ELECTRICAL RECEPTACLES AND SWITCHES ARE REQUIRED TO UTILIZE PARALLEL CIRCUITING BY THE USE OF "PIG TAILS" TO EACH DEVICE SO THAT IF AN OUTLET IS REMOVED OR FAILS ELECTRICAL CONTINUITY THE CIRCUIT WILL NOT BE COMPROMISED.
   - B. ALL ELECTRICAL WIRING MUST BE PROPERLY SPLICED BY TWISTING THE WIRES TOGETHER AND USE OF APPROVED AND LISTED COMPRESSION WIRE NUTS FOR ANY WIRING.
   - C. DO NOT USE END TO END BUTT-SPLICING CONNECTORS FOR ANY WIRING.
2. CIRCUIT LABELING
   - A. ALL RECEPTACLE PLATES, LIGHT SWITCH PLATES AND OUTLET BOXES SHALL BE PERMANENTLY LABELED WITH PANEL AND CIRCUIT NUMBER ON OUTSIDE OF COVER PLATE AND INSIDE OF OUTLET BOX.
   - B. RECEPTACLES/SWITCHES: IDENTIFY PANEL BOARD AND CIRCUIT NUMBER FROM WHICH SERVED. USE HOT, STAMPED OR ENGRAVED MACHINE PRINTING WITH BLACK-FILLED LETTERING ON FACE OF PLATE, AND DURABLE WIRE MARKERS OF TAGS INSIDE OUTLET BOXES.
   - C. CIRCUIT WIRING AND NEUTRALS INSIDE OF ALL PANELBOARDS ARE REQUIRED TO BE LABELED WITH WIRE TAGS SHOWING CIRCUIT NUMBERS.
3. EQUIPMENT LABELING
   - A. PROVIDE SWITCHBOARD WITH ENGRAVED NAMEPLATE INDICATING DESIGNATION, VOLTAGE, AND NUMBER OF PHASES. PROVIDE ENGRAVED ID TAGS (BAKELITE) FOR EACH OVER CURRENT DEVICE INDICATING LOAD SERVED. PROVIDE ENGRAVED ID TAGS (BAKELITE) FOR LABELING OF CIRCUIT NUMBERS.
   - B. PROVIDE DISTRIBUTION AND LIGHTING CLASS PANELBOARDS WITH ENGRAVED NAMEPLATES INDICATING DESIGNATION, VOLTAGE, AND NUMBER OF PHASES. PROVIDE ENGRAVED ID TAGS (BAKELITE) FOR LABELING OF CIRCUIT NUMBERS.
   - C. PROVIDE TRANSFORMERS WITH ENGRAVED NAMEPLATE INDICATING DESIGNATION, SOURCE PANEL NAME, AND LOAD SERVED.
   - D. ALL DISCONNECT SWITCHES, VFDS, AND MOTOR STARTERS SHALL HAVE AN ENGRAVED NAMEPLATE INDICATING DESIGNATION OF LOAD SERVED, VOLTAGE, NUMBER OF PHASES, AND SOURCE PANEL.
   - E. ALL NAMEPLATES SHALL BE ENGRAVED BAKELITE TYPE WITH BLACK LETTERS ON WHITE BACKGROUND. NAMEPLATES SHALL BE LOCATED SO AS TO BE CLEARLY VISIBLE AND NOT INTERFERE WITH MANUFACTURER NAMEPLATES.

FIRE ALARM SEQUENCE OF OPERATION

A. DETECTION & ALARM

WHEN A FIRE ALARM CONDITION IS DETECTED BY ANY ALARM INITIATING DEVICE (SMOKE DETECTOR, DUCT DETECTOR, PULL STATION, OR SPRINKLER FLOW SWITCH), THE FOLLOWING FUNCTIONS WILL OCCUR:

1. THE FIRE ALARM CONTROL PANEL COMMON ALARM INDICATOR WILL FLASH AND THE AUDIBLE DEVICE WILL SOUND. ACKNOWLEDGING THE ALARM CONDITION WILL SILENCE THE AUDIBLE DEVICE AND CAUSE THE COMMON ALARM INDICATOR TO ILLUMINATE STEADILY.
2. THE DISPLAY WILL INDICATE ALL APPLICABLE INFORMATION ASSOCIATED WITH THE ALARM CONDITION INCLUDING ZONE, DEVICE TYPE, DEVICE LOCATION, AND TIME OF ALARM. LOCATION AND ZONING MESSAGES WILL BE CUSTOM FIELD-PROGRAMMED TO MATCH THE RESPECTIVE PREMISES. LOCAL ANNUNCIATOR LED's ASSOCIATED WITH THE ALARM POINT WILL FLASH UNTIL PANEL IS SILENCED.
3. DISPLAY SYSTEM STATUS CHANGES ON ANY REMOTE ANNUNCIATOR(S) VIA AN ALPHANUMERIC MESSAGE ON THE DISPLAY.
4. ACTIVATE AN ALARM CONTACT CLOSURE TO ACTIVATE A DIGITAL ALARM COMMUNICATOR TRANSMITTER (DACT) FOR SIGNALING TO A UL-APPROVED CENTRAL MONITORING STATION VIA TELEPHONE LINES FURNISHED BY OWNER.
5. ACTIVATE ALL AUDIO/VISUAL SIGNALS THROUGHOUT THE ENTIRE FACILITY.
6. ACTIVATE ALL VISUAL SIGNALS. VISUAL SIGNALS WILL BE HIGH INTENSITY STROBES (75 cd MINIMUM) TO MEET THE REQUIREMENTS OF THE AMERICANS WITH DISABILITIES ACT (ADA) & TEXAS ACCESSIBILITY STANDARDS (TAS). ACTIVATE THROUGHOUT THE ENTIRE FACILITY.STROBES SHALL SHALL BE XENON TYPE AND WHITE OR CLEAR IN COLOR. THE MAX PULSE DURATION WILL BE 0.2 SECONDS WITH A MAXIMUM DUTY CYCLE OF 40%. THE FLASH RATE WILL BETWEEN 1-Hz AND 3-Hz.
7. DEACTIVATE ALL FANS RATED OVER 2,000 CFM.
8. ALARM VERIFICATION WILL BE FIELD-PROGRAMMABLE FOR EACH SMOKE DETECTOR. THE VERIFICATION SEQUENCE IS ACTIVATED AFTER A "CHECK" PROCEDURE AND THE PANEL WILL WAIT FOR A TIME THEN RESAMPLE THE DETECTOR FOR CONTINUED PRESENCE OF SMOKE. IF THE ALARM CONDITION CONTINUES OR A NON-VERIFIED DEVICE IS ACTUATED DURING THIS VERIFICATION PERIOD, THE PANEL WILL INITIATE ALL ALARM SEQUENCES. THIS ENTIRE SEQUENCE WILL OCCUR WITHIN 60 SEC. THE SYSTEM WILL LOG INTO MEMORY THE NUMBER OF VERIFICATION EVENTS.
9. CLOSE ALL SMOKE FIRE DAMPERS ASSOCIATED WITH THE HVAC UNIT(S).
10. ALL NON-SILENCEABLE AUXILIARY CONTROL FUNCTIONS (FANS, CENTRAL STATION INTERFACE, ELEVATOR RECALL INTERFACE, ETC) WILL REMAIN IN OPERATION, EVEN WHEN A/V DEVICES ARE SILENCED, UNTIL THE PANEL IS CLEARED AND RESET.
11. IF GAS WATER HEATERS OR BOILERS (DOMESTIC OR HYDRONIC) ARE PROVIDED FOR THE PROJECT PROVIDE A MANUAL RESET CARBON MONOXIDE (CO) DETECTOR ADJACENT TO THE WATER HEATER(S). INTERLOCK THE CO DETECTOR TO DISABLE THE WATER HEATER BURNERS UPON DETECTION OF 100 PPM OR HIGHER CO CONCENTRATION AND UPON LOSS OF POWER TO THE CO DETECTOR. SUBMIT PRODUCT DATA FOR CO DETECTOR AND CERTIFICATE OF CALIBRATION.

B. SYSTEM TROUBLE DETECTION

WHEN A TROUBLE CONDITION IS DETECTED BY THE FIRE ALARM CONTROL PANEL, THE FOLLOWING FUNCTIONS SHALL OCCUR:

1. THE FIRE ALARM CONTROL PANEL TROUBLE INDICATOR WILL FLASH AND THE INTERNAL AUDIBLE DEVICE WILL SOUND. ACKNOWLEDGMENT OF THE AUDIBLE DEVICE WILL SILENCE THE AUDIBLE DEVICE AND CAUSE ALL TROUBLE INDICATORS TO ILLUMINATE STEADY.
2. THE DISPLAY WILL DISPLAY ALL APPLICABLE INFORMATION ASSOCIATED WITH THE RESPECTIVE TROUBLE CONDITIONS. LOCAL ANNUNCIATOR LEDs ASSOCIATED WITH THE ALARM POINT WILL ILLUMINATE.
3. ACTIVATE A TROUBLE CONTACT CLOSURE TO ACTIVATE A DACT FOR SIGNALING TO A UL-APPROVED CENTRAL MONITORING STATION VIA PHONE LINES FURNISHED BY OWNER.
4. DISPLAY THE SYSTEM STATUS CHANGES ON THE REMOTE ANNUNCIATOR(S) VIA AN ALPHANUMERIC MESSAGE ON THAT DISPLAY.

C. SYSTEM SUPERVISORY ALARM DETECTION

WHEN A SUPERVISORY ALARM CONDITION IS DETECTED DUE TO A FIRE SPRINKLER VALVE BEING PLACED IN AN "OFF-NORMAL" POSITION, THE FOLLOWING FUNCTIONS WILL OCCUR:

1. THE FIRE ALARM CONTROL PANEL SUPERVISORY INDICATOR WILL FLASH AND THE INTERNAL AUDIBLE DEVICE WILL SOUND. ACKNOWLEDGMENT OF THE SUPERVISORY CONDITION WILL SILENCE THE AUDIBLE DEVICE.
2. THE DISPLAY WILL DISPLAY ALL APPLICABLE INFORMATION ASSOCIATED WITH THE RESPECTIVE SUPERVISORY CONDITION. LOCAL ANNUNCIATOR LED's WILL ILLUMINATE FOR THE ALARM POINT.
3. DISPLAY THE SYSTEM STATUS CHANGE ON THE REMOTE ANNUNCIATOR(S) VIA AN ALPHANUMERIC MESSAGE ON THAT DISPLAY.
4. ACTIVATE A SUPERVISORY ALARM CONTACT CLOSURE TO ACTIVATE THE DACT FOR SIGNALING TO A UL-APPROVED CENTRAL MONITORING STATION VIA PHONE LINES FURNISHED BY OWNER.

D. FIRE ALARM PANEL

FIRE ALARM PANEL SHALL BE INTELLIGENT DIGITAL PROTOCOL ANALOG ADDRESSABLE FIRE ALARM SYSTEM. THIS SYSTEM SHALL INCLUDE, BUT NOT BE LIMITED TO SYSTEM CABINET, POWER SUPPLY, BUILT SIGNALING LINE CIRCUIT (SLC), 80 CHARACTER LCD ANNUNCIATOR, SIX PROGRAMMABLE "FLEXPUT" CIRCUITS, BUILT IN DUAL LINE DIGITAL COMMUNICATOR ASSOCIATED PERIPHERAL DEVICES, BATTERIES, WIRING, CONDUIT AND OTHER RELEVANT COMPONENTS AND ACCESSORIES REQUIRED TO FURNISH A COMPLETE AND OPERATIONAL LIFE SAFETY SYSTEM. THE SYSTEM SHALL BE TESTED AFTER COMPLETION OF INSTALLATION IN ACCORDANCE WITH MANUFACTURE RECOMMENCED TESTING PROCEDURE AND GOVERNING LIFE SAFETY CODES. REFER TO SPECIFICATIONS FOR ADDITIONAL INFORMATION AND REQUIREMENTS.

GENERAL ONE LINE DIAGRAM NOTES

1. ALL CIRCUIT BREAKERS INDICATED ON THE ONE LINE DIAGRAM ARE THERMAL-MAGNETIC UNLESS NOTED OTHERWISE AS "ELECTRONIC" EXCLUDING THE MAIN WHICH WILL BE ELECTRONIC AND INSULATED CASE.
2. PROVIDE CONDUCTORS WITH INSULATION TYPES INDICATED ON ONE LINE DIAGRAM. SUBSTITUTION OF THWN OR THHN IN LIEU OF INDICATED XHHW-2 IS NOT ACCEPTABLE.
3. LOAD SIDE FEEDERS OF INDIVIDUALLY-MOUNTED DISCONNECT SWITCHES AND ENCLOSED CIRCUIT BREAKERS SHALL MATCH LINE SIDE FEEDERS UNLESS LOAD SIDE FEEDER IS SPECIFICALLY INDICATED OTHERWISE.
4. UNDERGROUND FEEDERS SHALL HAVE SCHEDULE-40 PVC CONDUIT BELOW GRADE WITH LONG-SWEEP, TRANSITIONAL ELBOWS TO RGS CONDUIT WHEN STUBBING-UP ABOVE GRADE.
5. WHERE FEEDER DESCRIPTION IS NOT SHOWN ON LOAD-SIDE OF ELECTRICAL EQUIPMENT, USE SAME FEEDER AS LARGEST LINE-SIDE FEEDERS; EXCEPT, FOR TRANSFORMER SECONDARY USE SIMILAR FEEDER WITH TWO TIMES AMPACITY OF PRIMARY.
6. WHERE PANEL SCHEDULE DOES NOT INDICATE FULLY-RATED SHORT-CIRCUIT WITHSTAND, SERIES-RATED EQUIPMENT WITH MINIMUM 22 KAIC BRANCH BREAKERS MAY BE USED FOR THAT PANEL.
7. OUTDOOR TRANSITION FROM UNDERGROUND PVC TO ABOVEGROUND RGS FOR CONDUITS > 1"C PROVIDE LONG-SWEEP (≥ 8R) ELBOWS AND WRAP FIRST 12" OF RGS WITH 3M SCOTCHRAP #51 4" CORROSION-PROTECTION TAPE WITH ≥ 2" OVERLAP.
8. ALL VARIABLE FREQUENCY DRIVES (VFD) SHOWN ON PLANS ARE TO BE PROVIDED BY DIVISION 26 CONTRACTOR; MEANWHILE, VFDS NOT SHOWN BUT LISTED IN MECHANICAL EQUIPMENT SCHEDULES ARE TO BE FACTORY MOUNTED AND PREWIRED AS PART OF DIVISION 23 EQUIPMENT TO BE TERMINATED BY DIVISION 26 CONTACTOR.
9. ALL EQUIPMENT SHALL HAVE A FACTORY APPLIED ANSI 61 GRAY FINISH APPLIED OVER A RUST INHIBITING TREATMENT. ANY ITEMS WHICH HAVE THE FINISH MARRED SHALL BE TOUCHED UP OR REFINISHED TO A NEW CONDITION BEFORE FINAL ACCEPTANCE. THIS SHALL INCLUDE, BUT SHALL NOT BE LIMITED TO, SANDING AND PROPERLY REMOVING RUST OR OTHER CONTAMINANTS AND COMPLETELY REPAINTING EQUIPMENT IF DAMAGE IS EXTENSIVE.

GENERAL SWITCHBOARD NOTES

1. PROVIDE CONCRETE PAD, 6" MIN. ABOVE FINISH FLOOR. MAINTAIN A MINIMUM OF 6" OF POURED CONCRETE PAD ALL AROUND THE SWITCHBOARD. PROVIDE STEP AS REQUIRED, COORDINATE WITH ARCHITECT & STRUCTURAL ENGINEER.
2. BUS (COPPER) SHALL BE CONTINUOUS RATED. CONSTRUCT THROUGH-BUS OF COPPER WITH SILVER-PLATED CONNECTIONS, WITH AMPACITY RATING, AND WITH SHORT-CIRCUIT CURRENT RATING.
3. NAMEPLATE: PROVIDE SWITCHBOARD WITH ENGRAVED NAMEPLATE INDICATING DESIGNATION, VOLTAGE, AND NUMBER OF PHASES. PROVIDE ENGRAVED ID TAGS (BAKELITE) FOR EACH OVER CURRENT DEVICE INDICATING LOAD SERVED.
4. PROVIDE FULLY RATED COPPER MAIN BUS, FULL CAPACITY NEUTRAL BUS, GROUND BUS FULL LENGTH OF SWITCHBOARD, FIRMLY CONNECTED TO EACH VERTICAL SECTION OF THE SWITCHBOARD.
5. SWITCHBOARDS SHALL BE PROVIDED WITH A FULL HINGED FRONT COVER AND BE FULLY ACCESSIBLE FROM THE FRONT. SWITCHBOARD SHALL NOT REQUIRE REAR ACCESSIBILITY.
6. SURGE PROTECTION: FURNISH AND INSTALL INTERNAL SURGE PROTECTION UNIT CONNECTED TO THE MAIN SWITCHBOARD. THE SURGE PROTECTION SHALL HAVE AN ISOLATION ENCLOSURE FROM THE REST OF THE EQUIPMENT.

FIRST RESPONDER COVERAGE NOTES

1. TYPICAL SYSTEM OPERATION IS CONTINUOUS OR AUTOMATIC.
2. PER IFC SIGNAL STRENGTH INTO AND OUT OF THE BUILDING TO HAVE A DELIVERED AUDIO QUALITY OF 95/95 @ 3.4 DAQ.
3. THE EQUIPMENT MUST BE APPROVED. THE SYSTEM DESIGN AND OPERATION MUST BE SPECIFICALLY DESIGNATED FOR USE AS AN IN-BUILDING EMERGENCY RADIO COMMUNICATION ENHANCEMENT SYSTEM BY THE MANUFACTURER.
4. THE SYSTEM MUST MEET SPECIFIC SURVIVABILITY REQUIREMENTS TO ENSURE IT WILL CONTINUE TO OPERATE DURING A FIRE.
5. THE SYSTEM MUST HAVE REDUNDANT PRIMARY POWER SOURCES AND STAND-BY OR BACKUP POWER TO OPERATE AT 100% CAPACITY FOR AT LEAST 12 HOURS.
6. THE SYSTEM MUST BE MONITORED THROUGH THE BUILDING FIRE ALARM SYSTEM FOR LOSS OF POWER; FAILURE OF THE BATTERY CHARGER; LOW-BATTERY CAPACITY INDICATION WHEN 70% OF THE 12-HOUR OPERATING CAPACITY HAS BEEN DEPLETED; MALFUNCTION OF THE DONOR ANTENNA AND ACTIVE RF-EMITTING DEVICE(S); AND FAILURE OF ANY CRITICAL SYSTEM COMPONENTS AND PROVIDE EITHER AN AUDIBLE WARNING OR TROUBLE SIGNAL.
7. THE SYSTEM PERFORMANCE AND RELIABILITY MUST BE TESTED ON INSTALLATION AND MAINTAINED OPERATIONAL AT ALL TIMES. AN ANNUAL INSPECTION IS ALSO REQUIRED.

FSGROUP ARCHITECTS
13105 Northwest Fwy Suite 1110
Houston Texas 77040
713 344 1752 Office
www.fsdesignbuild.com

PROJECT NAME

INFORMATION TECHNOLGY BUILDING
EUGENE HEIMANN CIRCLE
FORT BEND COUNTY , TEXAS

CONSULTANTS

Infrastructure Associates
INFRASTRUCTURE ASSOCIATES, INC.
607 RICHMOND AVENUE, SUITE 200
HOUSTON, TEXAS 77057-6267
(713) 622-0120 PH (713) 622-0557 FAX
TBPE FIRM REGISTRATION #F-4506
WWW.IAHOUSTON.COM

PROFESSIONAL SEAL

STATE OF TEXAS
SEVAK KALANTARIANS
97498
LICENSED
PROFESSIONAL ENGINEER
2024-05-15

ISSUED FOR

ISSUED FOR PROPOSALS AND PERMIT

REVISIONS

No.	DESCRIPTION	DATE

KEY PLAN

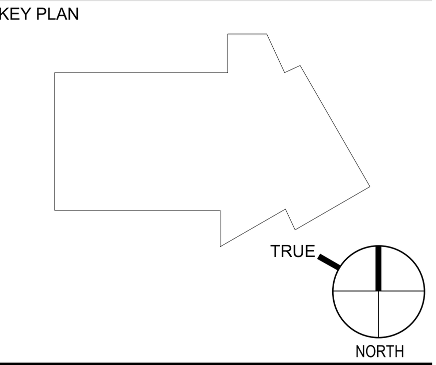

SHEET TITLE

NOTES AND LEGEND

SCALE: NOT TO SCALE

DATE: 05/15/2024

PROJECT NUMBER: 2319

SHEET NUMBER

E102

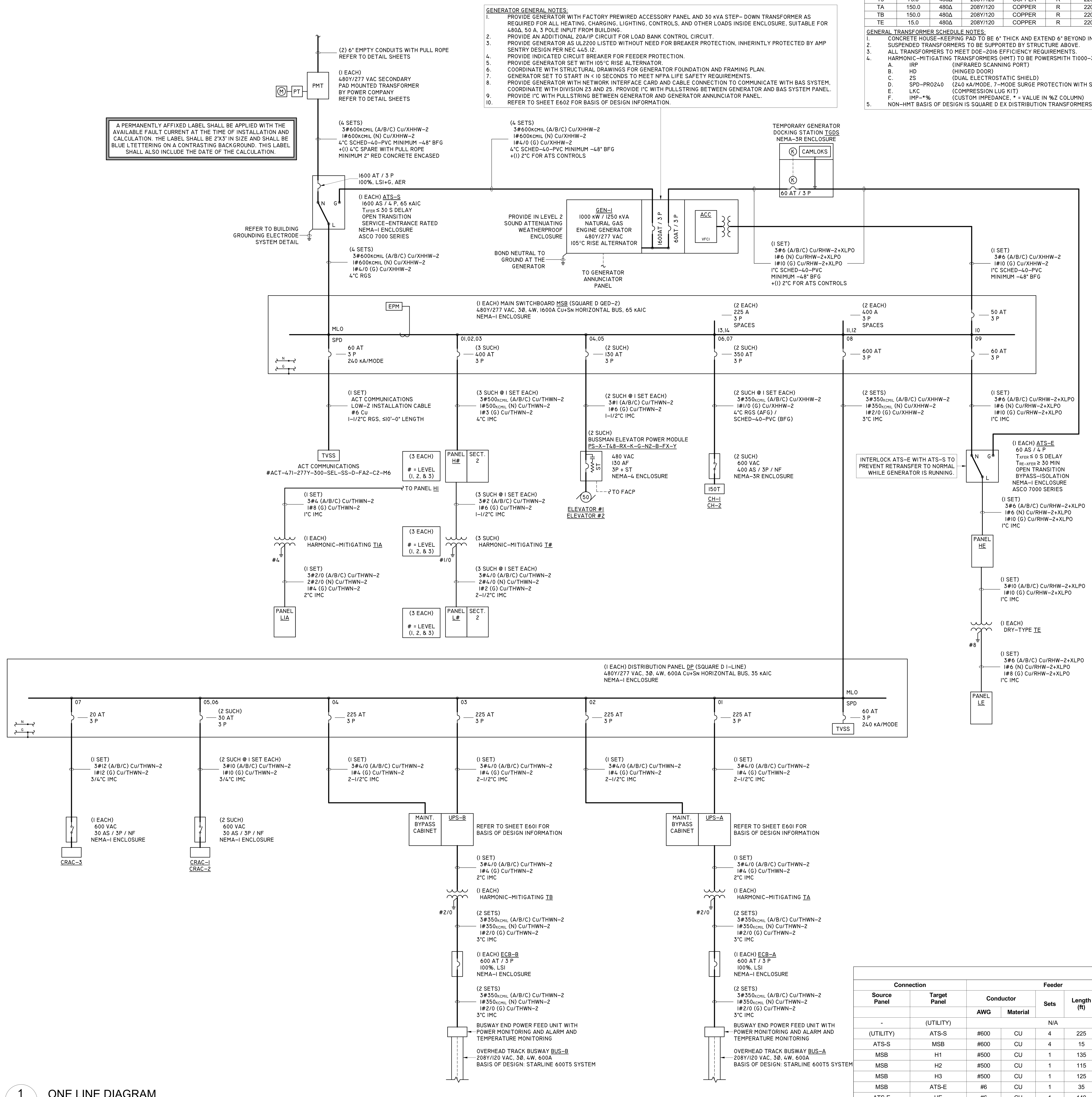

1 E111 ONE LINE DIAGRAM
SCALE : NOT TO SCALE

DRY-TYPE TRANSFORMER SCHEDULE

Tag	Capacity (kVA)	System Voltage (VAC)		Windings									Enclosure			Mounting	Location
		Primary	Secondary (Zig-Zag)	Conductor Material	NEMA Insulation Rating		Temp Rise (ºC)	K Rating	Harmonic		Impedance		NEMA Type	Material	Cooling Class		
					Class	Temp (ºC)			HMT	Ø-Shift	%Z ≥	X/R ≤					
T1	75.0	480Δ	208Y/120	COPPER	R	220	105	20	YES	0°	6.2	7.20	2	STEEL	AA	CONC PAD	ELECTRICAL 141
T1A	45.0	480Δ	208Y/120	COPPER	R	220	105	20	YES	30°	6.2	7.20	2	STEEL	AA	CONC PAD	ELECTRICAL 141
T2	75.0	480Δ	208Y/120	COPPER	R	220	105	20	YES	30°	6.2	7.20	2	STEEL	AA	CONC PAD	ELECTRICAL 242
T3	75.0	480Δ	208Y/120	COPPER	R	220	105	20	YES	0°	6.2	7.20	2	STEEL	AA	CONC PAD	ELECTRICAL 334
TA	150.0	480Δ	208Y/120	COPPER	R	220	105	20	YES	30°	6.2	7.20	2	STEEL	AA	CONC PAD	DIAGNOSTIC 212
TB	150.0	480Δ	208Y/120	COPPER	R	220	105	20	YES	0°	6.2	7.20	2	STEEL	AA	CONC PAD	DIAGNOSTIC 212
TE	15.0	480Δ	208Y/120	COPPER	R	220	115	13	NO		4.7	8.00	2	STEEL	AA	CONC PAD	ELECTRICAL 141

GENERAL TRANSFORMER SCHEDULE NOTES:
1. CONCRETE HOUSE-KEEPING PAD TO BE 6" THICK AND EXTEND 6" BEYOND INSTALLED TRANSFORMER ON ALL SIDES.
2. SUSPENDED TRANSFORMERS TO BE SUPPORTED BY STRUCTURE ABOVE.
3. ALL TRANSFORMERS TO MEET DOE-2016 EFFICIENCY REQUIREMENTS.
4. HARMONIC-MITIGATING TRANSFORMERS (HMT) TO BE POWERSMITH T1000-30H WITH THE FOLLOWING OPTIONS:
   - A. IRP (INFRARED SCANNING PORT)
   - B. HD (HINGED DOOR)
   - C. 2S (DUAL ELECTROSTATIC SHIELD)
   - D. SPD-PRO240 (240 KA/MODE, 7-MODE SURGE PROTECTION WITH SECONDARY FUSES)
   - E. LKC (COMPRESSION LUG KIT)
   - F. IMP-*% (CUSTOM IMPEDANCE, * = VALUE IN %Z COLUMN)
5. NON-HMT BASIS OF DESIGN IS SQUARE D EX DISTRIBUTION TRANSFORMERS.

ELECTRICAL LOAD ANALYSIS

DESCRIPTION	QTY		RATE		TOTAL	
LIGHTING - OFFICE (NEC TABLE 220.12)	43020	ft²	1.3	VA/ft²	56	kVA
LIGHTING - INTERIOR (ACTUAL)	30	kW	1.25	kVA/kW	38	kVA
LIGHTING - EXTERIOR (ACTUAL)	5	kW	1.25	kVA/kW	6	kVA
RECEPTACLE - OFFICE (NEC 220.14-K)	43020	ft²	1	VA/ft²	43	kVA
COMPUTERS - OFFICE	43020	ft²	2	VA/ft²	86	kVA
MISCELLANEOUS EQUIPMENT	50	kVA	1	EACH	50	kVA
DATA CENTER SERVER RACKS	145	kVA	1	EACH	145	kVA
WATER HEATING	24	kW	1	kVA/kW	24	kVA
HVAC HEATING	209	kW	1	kVA/kW	209	kVA
HVAC COOLING	300	TONS	1.4	kVA/TON	420	kVA
AHU MOTORS	60	HP	1.3	kVA/HP	78	kVA
CHILL WATER PUMPS	20	HP	1.3	kVA/HP	26	kVA
CRAC UNITS	23	HP	1.3	kVA/HP	30	kVA
ELEVATOR #1	50	HP	1.3	kVA/HP	65	kVA
LARGEST MOTOR - ELEVATOR #2	50	HP	1.8	kVA/HP	90	kVA
TOTAL POWER					1119	kVA
TOTAL CURRENT AT 480Y/277 VAC					1346	A

Utility Transformer Secondary

Parameter	Symbol	Value	Units
System Voltage	VLL	480	VAC
Phases	np	3	ϕ
Rated Power	S	750	KVA
Base Impedance	%Z	4.70%	%Z
Impedance Ratio	X/R	10	Ω/Ω

SHORT CIRCUIT CALCULATIONS

Connection		Feeder					Motors [hp]	Impedance							Fault Current	
Source Panel	Target Panel	Conductor		Sets	Length (ft)	Conduit Material		Feeder [μΩ/ft]			Cumulative [mΩ]				Available [A]	Rating [kA]
		AWG	Material					R	jX	X/R	Z	R	jX	X/R		
-	(UTILITY)	N/A					N/A	N/A			43.32	4.31	43.10	10.00	19194	-
(UTILITY)	ATS-S	#600	CU	4	225	PVC	-	5.75	9.75	1.70	45.64	5.60	45.29	8.08	18216	22
ATS-S	MSB	#600	CU	4	15	RGS	-	6.25	12.00	1.92	45.83	5.70	45.47	7.98	18141	22
MSB	H1	#500	CU	1	135	IMC	-	29.00	48.00	1.66	52.84	9.61	51.95	5.40	15735	22
MSB	H2	#500	CU	1	115	IMC	-	29.00	48.00	1.66	51.79	9.03	50.99	5.65	16054	22
MSB	H3	#500	CU	1	125	IMC	-	29.00	48.00	1.66	52.31	9.32	51.47	5.52	15893	22
MSB	ATS-E	#6	CU	1	35	IMC	-	490.00	64.00	0.13	52.90	22.85	47.71	2.09	15716	22
ATS-E	HE	#6	CU	1	140	IMC	-	490.00	64.00	0.13	107.59	91.45	56.67	0.62	7728	10
MSB	DP	#350	CU	2	125	IMC	-	19.50	25.00	1.28	49.28	8.14	48.60	5.97	16872	22

FSGROUP ARCHITECTS
13105 Northwest Fwy Suite 1110
Houston Texas 77040
713 344 1752 Office
www.fsdesignbuild.com

PROJECT NAME

INFORMATION TECHNOLGY BUILDING
EUGENE HEIMANN CIRCLE
FORT BEND COUNTY , TEXAS

CONSULTANTS

Infrastructure Associates
INFRASTRUCTURE ASSOCIATES, INC.
6117 RICHMOND AVENUE, SUITE 200
HOUSTON, TEXAS 77057-6267
(713) 622-0120 PH (713) 622-0557 FAX
TBPE FIRM REGISTRATION #F-4506
WWW.IAHOUSTON.COM

PROFESSIONAL SEAL

STATE OF TEXAS
SEVAK KALANTARIANS
97498
LICENSED
PROFESSIONAL ENGINEER
2024-05-15

ISSUED FOR

ISSUED FOR PROPOSALS AND PERMIT

REVISIONS

No.	DESCRIPTION	DATE

KEY PLAN

TRUE NORTH

SHEET TITLE

ONE LINE DIAGRAM

SCALE NOT TO SCALE

DATE 05/15/2024

PROJECT NUMBER 2319

SHEET NUMBER

E111

PANEL: H2

MTG:	X SURFACE / FLUSH / STRUT	BUS:	100% NEUTRAL / X SYS GND / ISO GND	OPT:	X INT SPD / X FTL / FUSIBLE	ENCL:	NEMA / TYPE 1 / STEEL	MAIN:	400 A BUS / CU/SN / 400 A MCB	3 ø 4 WIRE / 22 KAIC / 480Y/277 VOLT

LOCATION: ELEC ROOM
FED FROM: MSB

WIRE SIZE	LOAD DESCRIPTION	LOAD TYPE	TRIP RATE / P	CKT NO	A (kVA)		B (kVA)		C (kVA)		CKT NO	P / TRIP RATE	LOAD TYPE	LOAD DESCRIPTION	WIRE SIZE
3-#12, 1-#12, 1-#12, 3/4"C	FPT-2-1	M; H	20 / 3	1	3.0	1.6					2	1 / 20	L	LIGHTING - LEVEL 2 OFFICES	1-#12, 1-#12, 1-#12, 3/4"C
				3			3.0	1.0			4	1 / 20	L	LIGHTING - BULLPEN 220	1-#12, 1-#12, 1-#12, 3/4"C
				5					3.0	1.1	6	1 / 20	L	LIGHTING - RM 220,245-247	1-#12, 1-#12, 1-#12, 3/4"C
1-#8, 1-#8, 1-#10, 3/4"C	FPT-2-2	M; H	40 / 1	7	7.0	0.8					8	1 / 20	L	LIGHTING - DATA CENTER 240	1-#12, 1-#12, 1-#12, 3/4"C
3-#12, 1-#12, 1-#12, 3/4"C	FPT-2-3	M; H	20 / 3	9			2.7	1.3			10	1 / 20	L	LIGHTING - FOYER 200	1-#12, 1-#12, 1-#12, 3/4"C
				11					2.7	0.0	12	1 / 20	L	LIGHTING - BULLPEN 202	1-#12, 1-#12, 1-#12, 3/4"C
				13	2.7	0.3					14	1 / 20	L	LIGHTING - BULLPEN 202	1-#12, 1-#12, 1-#12, 3/4"C
3-#12, 1-#12, 1-#12, 3/4"C	FPT-2-4	M; H	20 / 3	15			3.0	0.9			16	1 / 20	L	LIGHTING - RM 209,210,212	1-#12, 1-#12, 1-#12, 3/4"C
				17					3.0	0.3	18	1 / 20	L	LIGHTING - BULLPEN 202	1-#12, 1-#12, 1-#12, 3/4"C
				19	3.0	0.0					20	1 / 20	--	SPARE	--
1-#12, 1-#12, 1-#12, 3/4"C	FPT-2-5	M; H	20 / 1	21			3.5	0.0			22	1 / 20	--	SPARE	--
3-#12, 1-#12, 1-#12, 3/4"C		M; H	20 / 3	23					2.7	0.0	24	1 / 20	--	SPARE	--
				25	2.7	0.0					26	1 / 20	--	SPARE	--
				27			2.7	0.0			28	1 / 20	--	SPARE	--
1-#10, 1-#10, 1-#10, 3/4"C	FPT-2-7	M; H	30 / 1	29					6.5	0.0	30	1 / 20	--	SPARE	--
1-#10, 1-#10, 1-#10, 3/4"C	FPT-2-8	M; H	30 / 1	31	5.5	0.0					32	1 / 20	--	SPARE	--
1-#8, 1-#8, 1-#10, 3/4"C	FPT-2-9	M; H	40 / 1	33			7.0	0.0			34	1 / 20	--	SPARE	--
3-#10, 1-#10, 3/4"C	AHU-2 VIA VFD	M	30 / 3	35					7.5	0.0	36	1 / 20	--	SPARE	--
				37	7.5	15.5					38	3 / 100	Spare; Q; R	TRANSFORMER 'T2'	REFER TO ONE LINE DIAGRAM FOR WIRE AND CONDUIT SIZES
				39			7.5	15.5			40				
3-#12, 1-#12, 3/4"C	EDH-2 VIA 30AS/3P/NEMA-1 DS	H	20 / 3	41					5.0	13.5	42				
				43	5.0	--					44	1 / --	--	SPACE	--
				45			5.0	--			46	1 / --	--	SPACE	--
--	SPACE	--	-- / 1	47					--	--	48	1 / --	--	SPACE	--
--	SPACE	--	-- / 1	49	--	--					50	1 / --	--	SPACE	--
--	SPACE	--	-- / 1	51			--	--			52	1 / --	--	SPACE	--
--	SPACE	--	-- / 1	53					--	--	54	1 / --	--	SPACE	--
--	SPACE	--	-- / 1	55	--	--					56	1 / --	--	SPACE	--
--	SPACE	--	-- / 1	57			--	--			58	1 / --	--	SPACE	--
--	SPACE	--	-- / 1	59					--	--	60	1 / --	--	SPACE	--
--	SPACE	--	-- / 1	61	--	--					62	1 / --	--	SPACE	--
--	SPACE	--	-- / 1	63			--	--			64	1 / --	--	SPACE	--
--	SPACE	--	-- / 1	65					--	--	66	1 / --	--	SPACE	--
--	SPACE	--	-- / 1	67	--	--					68	1 / --	--	SPACE	--
--	SPACE	--	-- / 1	69			--	--			70	1 / --	--	SPACE	--
--	SPACE	--	-- / 1	71					--	--	72	1 / --	--	SPACE	--
--	SPACE	--	-- / 1	73	--	--					74	1 / --	--	SPACE	--
--	SPACE	--	-- / 1	75			--	--			76	1 / --	--	SPACE	--
--	SPACE	--	-- / 1	77					--	--	78	1 / --	--	SPACE	--
--	SPACE	--	-- / 1	79	--	--					80	1 / --	--	SPACE	--
--	SPACE	--	-- / 1	81			--	--			82	1 / --	--	SPACE	--
--	SPACE	--	-- / 1	83					--	--	84	1 / --	--	SPACE	--
				Total Load:	54 kVA		53 kVA		45 kVA						
				Total Amps:	201 A		195 A		163 A						

LOAD ANALYSIS

LOAD TYPE		CONNECTED	FACTOR	DEMAND	TOTALS	
LIGHTING	L	7245 VA	125.00%	9056 VA		
RECEPTACLE	R	30600 VA	66.34%	20300 VA	CONNECTED LOAD (kVA)	153 kVA
EQUIPMENT	Q	13900 VA	100.00%	13900 VA	DEMAND LOAD (kVA)	144 kVA
COOLING	C	0 VA	0.00%	0 VA	CONNECTED CURRENT (A)	183 A
HEATING	H	71000 VA	100.00%	71000 VA	DEMAND CURRENT (A)	173 A
MOTOR	M	29800 VA	100.00%	29800 VA		
LARGEST MOTOR	G	0 VA	0.00%	0 VA		
KITCHEN	K	0 VA	0.00%	0 VA		
EXISTING	X	0 VA	0.00%	0 VA		

NOTES:
ALL WIRING FOR 20A/1P CKT. SHALL CONSIST OF 2#12, 1#12G IN 3/4"C UNLESS OTHERWISE NOTED.
* PROVIDE A BREAKER WITH GFCI ** ROUTE CIRCUIT THROUGH LIGHTING CONTACTOR

PANEL: H1

MTG:	X SURFACE / FLUSH / STRUT	BUS:	100% NEUTRAL / X SYS GND / ISO GND	OPT:	X INT SPD / X FTL / FUSIBLE	ENCL:	NEMA / TYPE 1 / STEEL	MAIN:	400 A BUS / CU/SN / 400 A MCB	3 ø 4 WIRE / 22 KAIC / 480Y/277 VOLT

LOCATION: ELEC ROOM
FED FROM: MSB

WIRE SIZE	LOAD DESCRIPTION	LOAD TYPE	TRIP RATE / P	CKT NO	A (kVA)		B (kVA)		C (kVA)		CKT NO	P / TRIP RATE	LOAD TYPE	LOAD DESCRIPTION	WIRE SIZE
1-#12, 1-#12, 1-#12, 3/4"C	LIGHTING - TRAINING ROOM 102	L	20 / 1	1	1.8	3.9					2	3 / 30	M	CHWP-1 VIA VFD	3-#10, 1-#10, 1"C
1-#12, 1-#12, 1-#12, 3/4"C	LIGHTING - TRAINING ROOM 102	L	20 / 1	3			1.8	3.9			4				
1-#12, 1-#12, 1-#12, 3/4"C	LIGHTING - TRAINING ROOM 102	L	20 / 1	5					0.3	3.9	6				
1-#12, 1-#12, 1-#12, 3/4"C	LIGHTING - LEVEL 1	L	20 / 1	7	1.3	3.9					8	3 / 30	M	CHWP-2 VIA VFD	3-#10, 1-#10, 1"C
1-#12, 1-#12, 1-#12, 3/4"C	LIGHTING - LEVEL 1 OFFICES	L	20 / 1	9			1.8	3.9			10				
1-#12, 1-#12, 1-#12, 3/4"C	LIGHTING - BULLPEN 120	L	20 / 1	11					2.2	3.9	12				
1-#12, 1-#12, 1-#12, 3/4"C	LIGHTING - LOBBY 100	L	20 / 1	13	0.8	4.0					14	3 / 30	Q	EWH-1 VIA 30AS / (2)30AF, (1)15AF / 3P / NEMA-1 DS	3-#10, 1-#10, 3/4"C
1-#12, 1-#12, 1-#12, 3/4"C	LIGHTING - ELEVATOR PIT	L	20 / 1	15			0.1	4.0			16				
1-#12, 1-#12, 1-#12, 3/4"C	LIGHTING - STAIRWELLS	L	20 / 1	17					0.8	4.0	18				
1-#12, 1-#12, 1-#12, 1"C	** SITE LIGHTING	L	20 / 1	19	0.9	4.0					20	3 / 30	Q	EWH-2 VIA 30AS / (2)30AF, (1)15AF / 3P / NEMA-1 DS	3-#10, 1-#10, 3/4"C
1-#12, 1-#12, 1-#12, 1"C	** SITE LIGHTING	L	20 / 1	21			0.9	4.0			22				
1-#12, 1-#12, 1-#12, 1"C	** SITE LIGHTING	L	20 / 1	23					0.5	4.0	24				
1-#12, 1-#12, 1-#12, 3/4"C	** LIGHTING - EMERGENCY EXTERIOR	L	20 / 1	25	0.2	7.5					26	3 / 35	M	AHU-1 VIA VFD	3-#8, 1-#10, 1"C
--	SPARE	--	20 / 1	27			0.0	7.5			28				
--	SPARE	--	20 / 1	29					0.0	7.5	30				
--	SPARE	--	20 / 1	31	0.0	6.0					32	3 / 70	Spare; Q; R	TRANSFORMER 'T1A'	REFER TO ONE LINE DIAGRAM FOR WIRE AND CONDUIT SIZES
--	SPARE	--	20 / 1	33			0.0	6.5			34				
--	SPARE	--	20 / 1	35					0.0	4.9	36				
--	SPARE	--	20 / 1	37	0.0	20.7					38	3 / 100	M; L; Spare; Q; R	TRANSFORMER 'T1'	REFER TO ONE LINE DIAGRAM FOR WIRE AND CONDUIT SIZES
--	SPARE	--	20 / 1	39			0.0	22.7			40				
--	SPARE	--	20 / 1	41					0.0	20.4	42				
1-#10, 1-#10, 1-#10, 3/4"C	FPT-1-1	M; H	30 / 1	43	4.7	6.0					44	3 / 30	H	EDH-1 VIA 30AS/NF/3P/NEMA-1 DS	3-#10, 1-#10, 3/4"C
3-#12, 1-#12, 1-#12, 3/4"C	FPT-1-2	M; H	20 / 3	45			3.3	6.0			46				
				47					3.3	6.0	48				
				49	3.3	--					50	1 / --	--	SPACE	--
3-#12, 1-#12, 1-#12, 3/4"C	FPT-1-3	M; H	20 / 3	51			3.3	--			52	1 / --	--	SPACE	--
				53					3.3	--	54	1 / --	--	SPACE	--
				55	3.3	--					56	1 / --	--	SPACE	--
3-#12, 1-#12, 1-#12, 3/4"C	FPT-1-4	M; H	20 / 3	57			3.3	--			58	1 / --	--	SPACE	--
				59					3.3	--	60	1 / --	--	SPACE	--
				61	3.3	--					62	1 / --	--	SPACE	--
1-#8, 1-#8, 1-#10, 3/4"C	FPT-1-5	M; H	40 / 1	63			6.7	--			64	1 / --	--	SPACE	--
1-#12, 1-#12, 1-#12, 3/4"C	FPT-1-6	M	20 / 1	65					0.7	--	66	1 / --	--	SPACE	--
1-#10, 1-#10, 1-#10, 3/4"C	FPT-1-7	M; H	30 / 1	67	4.7	--					68	1 / --	--	SPACE	--
1-#12, 1-#12, 1-#12, 3/4"C	FPT-1-8	M	20 / 1	69			0.7	--			70	1 / --	--	SPACE	--
1-#12, 1-#12, 1-#12, 3/4"C	FPT-1-9	M	20 / 1	71					0.7	--	72	1 / --	--	SPACE	--
1-#10, 1-#10, 1-#10, 3/4"C	FPT-1-10	M; H	30 / 1	73	4.7	--					74	1 / --	--	SPACE	--
1-#10, 1-#10, 1-#10, 3/4"C	FPT-1-11	M; H	30 / 1	75			4.7	--			76	1 / --	--	SPACE	--
1-#12, 1-#12, 1-#12, 3/4"C	UH-1	H	20 / 1	77					2.0	--	78	1 / --	--	SPACE	--
--	SPACE	--	-- / 1	79	--	--					80	1 / --	--	SPACE	--
--	SPACE	--	-- / 1	81			--	--			82	1 / --	--	SPACE	--
--	SPACE	--	-- / 1	83					--	--	84	1 / --	--	SPACE	--
				Total Load:	85 kVA		85 kVA		71 kVA						
				Total Amps:	314 A		314 A		257 A						

LOAD ANALYSIS

LOAD TYPE		CONNECTED	FACTOR	DEMAND	TOTALS	
LIGHTING	L	13657 VA	125.00%	17071 VA		
RECEPTACLE	R	44820 VA	61.16%	27410 VA	CONNECTED LOAD (kVA)	241 kVA
EQUIPMENT	Q	52700 VA	100.00%	52700 VA	DEMAND LOAD (kVA)	230 kVA
COOLING	C	0 VA	0.00%	0 VA	CONNECTED CURRENT (A)	290 A
HEATING	H	68610 VA	100.00%	68610 VA	DEMAND CURRENT (A)	277 A
MOTOR	M	49600 VA	100.00%	49600 VA		
LARGEST MOTOR	G	0 VA	0.00%	0 VA		
KITCHEN	K	0 VA	0.00%	0 VA		
EXISTING	X	0 VA	0.00%	0 VA		

NOTES:
ALL WIRING FOR 20A/1P CKT. SHALL CONSIST OF 2#12, 1#12G IN 3/4"C UNLESS OTHERWISE NOTED.
* PROVIDE A BREAKER WITH GFCI ** ROUTE CIRCUIT THROUGH LIGHTING CONTACTOR

PANEL: L2

MTG:	X SURFACE / FLUSH / STRUT	BUS:	200% NEUTRAL / X SYS GND / ISO GND	OPT:	X INT SPD / X FTL / FUSIBLE	ENCL:	NEMA / TYPE 1 / STEEL	MAIN:	225 A BUS / CU/SN / 225 A MCB	3 ø 4 WIRE / 10 KAIC / 208Y/120 VOLT

LOCATION: ELEC ROOM
FED FROM: T2

WIRE SIZE	LOAD DESCRIPTION	LOAD TYPE	TRIP RATE / P	CKT NO	A (kVA)		B (kVA)		C (kVA)		CKT NO	P / TRIP RATE	LOAD TYPE	LOAD DESCRIPTION	WIRE SIZE
1-#12, 1-#12, 1-#12, 3/4"C	RECEPTACLE - ELECTRICAL 242	R	20 / 1	1	0.2	0.9					2	1 / 20	R	RECEPTACLE - CONFERENCE 221	1-#12, 1-#12, 1-#12, 3/4"C
1-#12, 1-#12, 1-#12, 3/4"C	RECEPTACLE/AUTO SENSORS - RR 205,206	R	20 / 1	3			0.4	0.7			4	1 / 20	R	RECEPTACLE - CONFERENCE 221	1-#12, 1-#12, 1-#12, 3/4"C
1-#12, 1-#12, 1-#12, 3/4"C	* DRINKING FOUNTAIN - BULLPEN 202	Q	20 / 1	5					0.6	0.7	6	1 / 20	R	RECEPTACLE - SUPERVISOR 222	1-#12, 1-#12, 1-#12, 3/4"C
1-#12, 1-#12, 1-#12, 3/4"C	COPIER - WORK RM 230	Q	20 / 1	7	1.5	0.7					8	1 / 20	R	RECEPTACLE - INF SV1 223	1-#12, 1-#12, 1-#12, 3/4"C
1-#12, 1-#12, 1-#12, 3/4"C	COPIER - WORK RM 230	Q	20 / 1	9			1.5	0.7			10	1 / 20	R	RECEPTACLE - INF M1 224	1-#12, 1-#12, 1-#12, 3/4"C
1-#12, 1-#12, 1-#12, 3/4"C	RECEPTACLE - WORK RM 230	R	20 / 1	11					0.5	0.7	12	1 / 20	R	RECEPTACLE - OP SV4 225	1-#12, 1-#12, 1-#12, 3/4"C
1-#12, 1-#12, 1-#12, 3/4"C	REFRIGERATOR - BREAK RM 245	Q	20 / 1	13	1.2	0.9					14	1 / 20	R	RECEPTACLE - OP M1 226	1-#12, 1-#12, 1-#12, 3/4"C
1-#12, 1-#12, 1-#12, 3/4"C	DISHWASHER - BREAK RM 245	Q	20 / 1	15			1.5	0.7			16	1 / 20	R	RECEPTACLE - SUPERVISOR 227	1-#12, 1-#12, 1-#12, 3/4"C
1-#12, 1-#12, 1-#12, 3/4"C	DISPOSAL - BREAK RM 245	Q	20 / 1	17					0.6	0.7	18	1 / 20	R	RECEPTACLE - MANAGER 228	1-#12, 1-#12, 1-#12, 3/4"C
1-#12, 1-#12, 1-#12, 3/4"C	MICROWAVE - BREAK RM 245	Q	20 / 1	19	1.5	0.7					20	1 / 20	R	RECEPTACLE - MANAGER 229	1-#12, 1-#12, 1-#12, 3/4"C
1-#12, 1-#12, 1-#12, 3/4"C	MICROWAVE - BREAK RM 245	Q	20 / 1	21			1.5	1.1			22	1 / 20	R	RECEPTACLE - CS M1 211	1-#12, 1-#12, 1-#12, 3/4"C
1-#12, 1-#12, 1-#12, 3/4"C	APPLIANCE - BREAK RM 245	Q	20 / 1	23					1.5	0.9	24	1 / 20	R	RECEPTACLE - CS SV1 210	1-#12, 1-#12, 1-#12, 3/4"C
1-#12, 1-#12, 1-#12, 3/4"C	APPLIANCE - BREAK RM 245	Q	20 / 1	25	1.5	0.5					26	1 / 20	R	RECEPTACLE - FORENSIC 209	1-#12, 1-#12, 1-#12, 3/4"C
3-#10, 1-#10, 1-#12, 3/4"C	POWERED FURNITURE - BULLPEN 202	R	20 / 3	27			0.7	0.7			28	3 / 20	R	POWERED FURNITURE - BULLPEN 220	3-#10, 1-#10, 1-#12, 3/4"C
				29					0.7	0.7	30				
				31	0.7	0.7					32				
1-#10, 1-#10, 1-#12, 3/4"C	POWERED FURNITURE - BULLPEN 202	R	20 / 1	33			0.7	0.7			34	1 / 20	R	POWERED FURNITURE - BULLPEN 220	1-#10, 1-#10, 1-#12, 3/4"C
1-#12, 1-#12, 1-#12, 3/4"C	RECEPTACLE - BULLPEN 202	R	20 / 1	35					0.7	0.6	36	3 / 20	R	POWERED FURNITURE - BULLPEN 220	3-#10, 1-#10, 1-#12, 3/4"C
1-#12, 1-#12, 1-#12, 3/4"C	RECEPTACLE - BULLPEN 202	R	20 / 1	37	0.4	0.6					38				
1-#12, 1-#12, 1-#12, 3/4"C	RECEPTACLE - CYBER/NSOC 208	R	20 / 1	39			0.7	0.6			40				
1-#12, 1-#12, 1-#12, 3/4"C	RECEPTACLE - CYBER/NSOC 208	R	20 / 1	41					0.7	0.6	42	1 / 20	R	POWERED FURNITURE - BULLPEN 220	1-#10, 1-#10, 1-#12, 3/4"C
1-#12, 1-#12, 1-#12, 3/4"C	RECEPTACLE - CYBER/NSOC 208	R	20 / 1	43	0.7	0.7					44	3 / 20	R	POWERED FURNITURE - BULLPEN 220	3-#10, 1-#10, 1-#12, 3/4"C
1-#12, 1-#12, 1-#12, 3/4"C	RECEPTACLE - DIAGNOSTIC 212	R	20 / 1	45			0.5	0.7			46				
1-#12, 1-#12, 1-#12, 3/4"C	RECEPTACLE - FOYER 200	R	20 / 1	47					0.5	0.7	48				
1-#12, 1-#12, 1-#12, 3/4"C	RECEPTACLE - FORENSIC 209	R	20 / 1	49	0.5	0.7					50	1 / 20	R	POWERED FURNITURE - BULLPEN 220	1-#10, 1-#10, 1-#12, 3/4"C
1-#12, 1-#12, 1-#12, 3/4"C	RECEPTACLE - FORENSIC 209	R	20 / 1	51			0.5	0.9			52	1 / 20	R	RECEPTACLE - BULLPEN 220	1-#12, 1-#12, 1-#12, 3/4"C
1-#12, 1-#12, 1-#12, 3/4"C	RECEPTACLE - BULLPEN 202	R	20 / 1	53					0.2	1.1	54	1 / 20	R	RECEPTACLE - BULLPEN 220	1-#12, 1-#12, 1-#12, 3/4"C
1-#12, 1-#12, 1-#12, 3/4"C	RECEPTACLE - BULLPEN 202	R	20 / 1	55	0.2	0.5					56	1 / 20	R	RECEPTACLE - MECHANICAL 207	1-#12, 1-#12, 1-#12, 3/4"C
--	SPARE	--	20 / 1	57			0.0	0.5			58	1 / 20	Q	SECURITY PANEL - MECHANICAL 207	1-#12, 1-#12, 1-#12, 3/4"C
--	SPARE	--	20 / 1	59					0.0	0.5	60	1 / 20	Q	DDC PANEL - MECHANICAL 207	1-#12, 1-#12, 1-#12, 3/4"C
--	SPARE	--	20 / 1	61	0.0	0.0					62	1 / 20	--	SPARE	--
--	SPARE	--	20 / 1	63			0.0	0.0			64	1 / 20	--	SPARE	--
--	SPARE	--	20 / 1	65					0.0	0.0	66	1 / 20	--	SPARE	--
--	SPARE	--	20 / 1	67	0.0	0.0					68	1 / 20	--	SPARE	--
--	SPARE	--	20 / 1	69			0.0	0.0			70	1 / 20	--	SPARE	--
--	SPARE	--	20 / 1	71					0.0	0.0	72	1 / 20	--	SPARE	--
--	SPARE	--	20 / 1	73	0.0	0.0					74	1 / 20	--	SPARE	--
--	SPARE	--	20 / 1	75			0.0	0.0			76	1 / 20	--	SPARE	--
--	SPARE	--	20 / 1	77					0.0	0.0	78	1 / 20	--	SPARE	--
--	SPARE	--	20 / 1	79	0.0	0.0					80	1 / 20	--	SPARE	--
--	SPARE	--	20 / 1	81			0.0	0.0			82	1 / 20	--	SPARE	--
--	SPARE	--	20 / 1	83					0.0	0.0	84	1 / 20	--	SPARE	--
--	SPARE	--	20 / 1	85	0.0	0.0					86	1 / 20	--	SPARE	--
--	SPARE	--	20 / 1	87			0.0	0.0			88	1 / 20	--	SPARE	--
--	SPARE	--	20 / 1	89					0.0	0.0	90	1 / 20	--	SPARE	--
--	SPARE	--	20 / 1	91	0.0	0.0					92	1 / 20	--	SPARE	--
--	SPARE	--	20 / 1	93			0.0	0.0			94	1 / 20	--	SPARE	--
--	SPARE	--	20 / 1	95					0.0	0.0	96	1 / 20	--	SPARE	--
--	SPARE	--	20 / 1	97	0.0	0.0					98	1 / 20	--	SPARE	--
--	SPARE	--	20 / 1	99			0.0	0.0			100	1 / 20	--	SPARE	--
--	SPARE	--	20 / 1	101					0.0	0.0	102	1 / 20	--	SPARE	--
--	SPARE	--	20 / 1	103	0.0	0.0					104	1 / 20	--	SPARE	--
--	SPARE	--	20 / 1	105			0.0	0.0			106	1 / 20	--	SPARE	--
--	SPARE	--	20 / 1	107					0.0	0.0	108	1 / 20	--	SPARE	--
				Total Load:	16 kVA		16 kVA		13 kVA						
				Total Amps:	132 A		132 A		112 A						

LOAD ANALYSIS

LOAD TYPE		CONNECTED	FACTOR	DEMAND	TOTALS	
LIGHTING	L	0 VA	0.00%	0 VA		
RECEPTACLE	R	30600 VA	66.34%	20300 VA	CONNECTED LOAD (kVA)	45 kVA
EQUIPMENT	Q	13900 VA	100.00%	13900 VA	DEMAND LOAD (kVA)	34 kVA
COOLING	C	0 VA	0.00%	0 VA	CONNECTED CURRENT (A)	124 A
HEATING	H	0 VA	0.00%	0 VA	DEMAND CURRENT (A)	95 A
MOTOR	M	0 VA	0.00%	0 VA		
LARGEST MOTOR	G	0 VA	0.00%	0 VA		
KITCHEN	K	0 VA	0.00%	0 VA		
EXISTING	X	0 VA	0.00%	0 VA		

NOTES:
ALL WIRING FOR 20A/1P CKT. SHALL CONSIST OF 2#12, 1#12G IN 3/4"C UNLESS OTHERWISE NOTED.
* PROVIDE A BREAKER WITH GFCI ** ROUTE CIRCUIT THROUGH LIGHTING CONTACTOR

PANEL: L1

MTG:	X SURFACE / FLUSH / STRUT	BUS:	200% NEUTRAL / X SYS GND / ISO GND	OPT:	X INT SPD / X FTL / FUSIBLE	ENCL:	NEMA / TYPE 1 / STEEL	MAIN:	225 A BUS / CU/SN / 225 A MCB	3 ø 4 WIRE / 10 KAIC / 208Y/120 VOLT

LOCATION: ELEC ROOM
FED FROM: T1

WIRE SIZE	LOAD DESCRIPTION	LOAD TYPE	TRIP RATE / P	CKT NO	A (kVA)		B (kVA)		C (kVA)		CKT NO	P / TRIP RATE	LOAD TYPE	LOAD DESCRIPTION	WIRE SIZE
1-#12, 1-#12, 1-#12, 3/4"C	ELEVATOR #1 CAB LIGHTING	L	20 / 1	1	0.1	0.1					2	1 / 20	L	ELEVATOR #2 CAB LIGHTING	1-#12, 1-#12, 1-#12, 3/4"C
1-#12, 1-#12, 1-#12, 3/4"C	ELEVATOR #1 CAB FANS	Q	20 / 1	3			1.0	1.0			4	1 / 20	Q	ELEVATOR #2 CAB FANS	1-#12, 1-#12, 1-#12, 3/4"C
1-#12, 1-#12, 1-#12, 3/4"C	RECEPTACLE - ELEVATOR PIT	R	20 / 1	5					0.2	0.2	6	1 / 20	R	RECEPTACLE - ELEVATOR PIT	1-#12, 1-#12, 1-#12, 3/4"C
1-#12, 1-#12, 1-#12, 3/4"C	SUMP PUMP ALARM PANEL - ELEVATOR PIT	R	20 / 1	7	0.2	0.2					8	1 / 20	R	SUMP PUMP ALARM PANEL - ELEVATOR PIT	1-#12, 1-#12, 1-#12, 3/4"C
2-#12, 1-#12, 1-#12, 3/4"C	* SUMP PUMP - ELEVATOR PIT L14-20R	Q	20 / 2	9			1.0	1.0			10	2 / 20	Q	* SUMP PUMP - ELEVATOR PIT L14-20R	2-#12, 1-#12, 1-#12, 3/4"C
				11					1.0	1.0	12				
1-#12, 1-#12, 1-#12, 3/4"C	RECEPTACLE - LOBBY 100	R	20 / 1	13	1.1	0.4					14	1 / 20	R	RECEPTACLE - ELECTRICAL 143	1-#12, 1-#12, 1-#12, 3/4"C
1-#12, 1-#12, 1-#12, 3/4"C	RECEPTACLE - LOBBY 100	R	20 / 1	15			0.9	0.2			16	1 / 20	R	RECEPTACLE - ELECTRICAL 141	1-#12, 1-#12, 1-#12, 3/4"C
1-#12, 1-#12, 1-#12, 3/4"C	* DRINKING FOUNTAIN - LOBBY 100	Q	20 / 1	17					0.6	0.7	18	1 / 20	R	RECEPTACLE - DEPLOY RM 121	1-#12, 1-#12, 1-#12, 3/4"C
1-#12, 1-#12, 1-#12, 3/4"C	RECEPTACLE/AUTO SENSORS - RR 105,106	R	20 / 1	19	0.4	0.7					20	1 / 20	R	RECEPTACLE - FA SV 2 122	1-#12, 1-#12, 1-#12, 3/4"C
1-#12, 1-#12, 1-#12, 3/4"C	RECEPTACLE - CONFERENCE 129	R	20 / 1	21			0.7	0.7			22	1 / 20	R	RECEPTACLE - FA SV 1 123	1-#12, 1-#12, 1-#12, 3/4"C
1-#12, 1-#12, 1-#12, 3/4"C	RECEPTACLE - CONFERENCE 129	R	20 / 1	23					1.1	0.7	24	1 / 20	R	RECEPTACLE - OP SV 3 124	1-#12, 1-#12, 1-#12, 3/4"C
1-#12, 1-#12, 1-#12, 3/4"C	TREADMILL - GYM 130	Q	20 / 1	25	1.5	0.7					26	1 / 20	R	RECEPTACLE - OP SV 2 125	1-#12, 1-#12, 1-#12, 3/4"C
1-#12, 1-#12, 1-#12, 3/4"C	TREADMILL - GYM 130	Q	20 / 1	27			1.5	0.7			28	1 / 20	R	RECEPTACLE - OP SV 1 126	1-#12, 1-#12, 1-#12, 3/4"C
1-#12, 1-#12, 1-#12, 3/4"C	RECEPTACLE - GYM 130	R	20 / 1	29					0.7	0.5	30	1 / 20	R	RECEPTACLE - RM 131,132,136	1-#12, 1-#12, 1-#12, 3/4"C
1-#12, 1-#12, 1-#12, 3/4"C	RECEPTACLE - GYM 130	R	20 / 1	31	0.4	0.7					32	1 / 20	R	RECEPTACLE - BUNK 2 135	1-#12, 1-#12, 1-#12, 3/4"C
1-#12, 1-#12, 1-#12, 3/4"C	RECEPTACLE - BUNK 1 133	R	20 / 1	33			0.5	0.7			34	1 / 20	R	RECEPTACLE - MDM INVENTORY 142	1-#12, 1-#12, 1-#12, 3/4"C
1-#12, 1-#12, 1-#12, 3/4"C	RECEPTACLE - WORK RM 110	R	20 / 1	35					0.4	1.5	36	1 / 20	Q	COPIER - WORK RM 110	1-#12, 1-#12, 1-#12, 3/4"C
1-#12, 1-#12, 1-#12, 3/4"C	RECEPTACLE - TECH BUILD RM 140	R	20 / 1	37	0.7	1.5					38	1 / 20	Q	COPIER - WORK RM 110	1-#12, 1-#12, 1-#12, 3/4"C
1-#12, 1-#12, 1-#12, 3/4"C	RECEPTACLE - TECH BUILD RM 140	R	20 / 1	39			1.1	0.5			40	1 / 20	R	RECEPTACLE - LOUNGE 113	1-#12, 1-#12, 1-#12, 3/4"C
1-#12, 1-#12, 1-#12, 3/4"C	RECEPTACLE - TECH BUILD RM 140	R	20 / 1	41					0.7	1.1	42	1 / 20	R	RECEPTACLE - BULLPEN 120	1-#12, 1-#12, 1-#12, 3/4"C
1-#12, 1-#12, 1-#12, 3/4"C	RECEPTACLE - TECH BUILD RM 140	R	20 / 1	43	0.7	0.7					44	1 / 20	R	RECEPTACLE - EXTERIOR YARD	1-#12, 1-#12, 1-#12, 3/4"C
1-#12, 1-#12, 1-#12, 3/4"C	RECEPTACLE - RM 111,112	R	20 / 1	45			1.1	1.2			46	1 / 20	Q	REFRIGERATOR - BREAK RM 145	1-#12, 1-#12, 1-#12, 3/4"C
3-#10, 1-#10, 3/4"C	DOCK LIFT VIA 30AS / NF / 3P / NEMA-3R DS	M	30 / 3	47					1.3	1.5	48	1 / 20	Q	APPLIANCE - BREAK RM 145	1-#12, 1-#12, 1-#12, 3/4"C
				49	1.3	1.5					50	1 / 20	Q	APPLIANCE - BREAK RM 145	1-#12, 1-#12, 1-#12, 3/4"C
				51			1.3	1.5			52	1 / 20	Q	DISHWASHER - BREAK RM 145	1-#12, 1-#12, 1-#12, 3/4"C
1-#12, 1-#12, 1-#12, 3/4"C	HWCP-1	M	20 / 1	53					0.5	0.6	54	1 / 20	Q	DISPOSAL - BREAK RM 145	1-#12, 1-#12, 1-#12, 3/4"C
1-#12, 1-#12, 1-#12, 3/4"C	HWCP-1	M	20 / 1	55	0.5	1.5					56	1 / 20	Q	MICROWAVE - BREAK RM 145	1-#12, 1-#12, 1-#12, 3/4"C
3-#10, 1-#10, 1-#12, 3/4"C	POWERED FURNITURE - BULLPEN 120	R	20 / 3	57			0.6	1.5			58	1 / 20	Q	MICROWAVE - BREAK RM 145	1-#12, 1-#12, 1-#12, 3/4"C
				59					0.6	0.5	60	1 / 20	R	RECEPTACLE - MECHANICAL 107	1-#12, 1-#12, 1-#12, 3/4"C
				61	0.6	0.5					62	1 / 20	Q	SECURITY PANEL - MECHANICAL 107	1-#12, 1-#12, 1-#12, 3/4"C
1-#10, 1-#10, 1-#12, 3/4"C	POWERED FURNITURE - BULLPEN 120	R	20 / 1	63			0.6	0.5			64	1 / 20	Q	DDC PANEL - MECHANICAL 107	1-#12, 1-#12, 1-#12, 3/4"C
3-#10, 1-#10, 1-#12, 3/4"C	POWERED FURNITURE - BULLPEN 120	R	20 / 3	65					1.1	0.9	66	1 / 20	M	EF-2 - SHOWER 132	1-#12, 1-#12, 1-#12, 3/4"C
				67	1.1	0.9					68	1 / 20	M	EF-3 - SHOWER 131	1-#12, 1-#12, 1-#12, 3/4"C
				69			1.1	0.5			70	1 / 20	M	SF-1	1-#12, 1-#12, 1-#12, 3/4"C
1-#10, 1-#10, 1-#12, 3/4"C	POWERED FURNITURE - BULLPEN 120	R	20 / 1	71					1.1	0.7	72	1 / 20	R	RECEPTACLE - EXTERIOR	1-#12, 1-#12, 1-#12, 3/4"C
3-#10, 1-#10, 1-#12, 3/4"C	POWERED FURNITURE - BULLPEN 120	R	20 / 3	73	1.1	0.5					74	1 / 20	R	RECEPTACLE - RM 120,146,147	1-#12, 1-#12, 1-#12, 3/4"C
				75			1.1	0.0			76	1 / 20	--	SPARE	--
				77					1.1	0.0	78	1 / 20	--	SPARE	--
1-#10, 1-#10, 1-#12, 3/4"C	POWERED FURNITURE - BULLPEN 120	R	20 / 1	79	1.1	0.0					80	1 / 20	--	SPARE	--
--	SPARE	--	20 / 1	81			0.0	0.0			82	1 / 20	--	SPARE	--
--	SPARE	--	20 / 1	83					0.0	0.0	84	1 / 20	--	SPARE	--
--	SPARE	--	20 / 1	85	0.0	0.0					86	1 / 20	--	SPARE	--
--	SPARE	--	20 / 1	87			0.0	0.0			88	1 / 20	--	SPARE	--
--	SPARE	--	20 / 1	89					0.0	0.0	90	1 / 20	--	SPARE	--
--	SPARE	--	20 / 1	91	0.0	0.0					92	1 / 20	--	SPARE	--
--	SPARE	--	20 / 1	93			0.0	0.0			94	1 / 20	--	SPARE	--
--	SPARE	--	20 / 1	95					0.0	0.0	96	1 / 20	--	SPARE	--
--	SPARE	--	20 / 1	97	0.0	0.0					98	1 / 20	--	SPARE	--
--	SPARE	--	20 / 1	99			0.0	0.0			100	1 / 20	--	SPARE	--
--	SPARE	--	20 / 1	101					0.0	0.0	102	1 / 20	--	SPARE	--
--	SPARE	--	20 / 1	103	0.0	0.0					104	1 / 20	--	SPARE	--
--	SPARE	--	20 / 1	105			0.0	0.0			106	1 / 20	--	SPARE	--
--	SPARE	--	20 / 1	107					0.0	0.0	108	1 / 20	--	SPARE	--
				Total Load:	21 kVA		23 kVA		20 kVA						
				Total Amps:	173 A		189 A		170 A						

LOAD ANALYSIS

LOAD TYPE		CONNECTED	FACTOR	DEMAND	TOTALS	
LIGHTING	L	200 VA	125.00%	250 VA		
RECEPTACLE	R	33300 VA	65.02%	21650 VA	CONNECTED LOAD (kVA)	64 kVA
EQUIPMENT	Q	22900 VA	100.00%	22900 VA	DEMAND LOAD (kVA)	52 kVA
COOLING	C	0 VA	0.00%	0 VA	CONNECTED CURRENT (A)	177 A
HEATING	H	0 VA	0.00%	0 VA	DEMAND CURRENT (A)	145 A
MOTOR	M	7300 VA	100.00%	7300 VA		
LARGEST MOTOR	G	0 VA	0.00%	0 VA		
KITCHEN	K	0 VA	0.00%	0 VA		
EXISTING	X	0 VA	0.00%	0 VA		

NOTES:
ALL WIRING FOR 20A/1P CKT. SHALL CONSIST OF 2#12, 1#12G IN 3/4"C UNLESS OTHERWISE NOTED.
* PROVIDE A BREAKER WITH GFCI ** ROUTE CIRCUIT THROUGH LIGHTING CONTACTOR

FSGROUP ARCHITECTS
13105 Northwest Fwy Suite 1110
Houston Texas 77040
713 344 1752 Office
www.fsdesignbuild.com

PROJECT NAME

THE STATE OF TEXAS · FORT BEND COUNTY

INFORMATION TECHNOLGY BUILDING
EUGENE HEIMANN CIRCLE
FORT BEND COUNTY , TEXAS

CONSULTANTS

Infrastructure Associates
INFRASTRUCTURE ASSOCIATES, INC.
6117 RICHMOND AVENUE, SUITE 200
HOUSTON, TEXAS 77057-6267
(713) 622-0120 PH (713) 622-0557 FAX
TBPE FIRM REGISTRATION #F-4506
WWW.IAHOUSTON.COM

PROFESSIONAL SEAL

STATE OF TEXAS
SEVAK KALANTARIANS
97498
LICENSED
PROFESSIONAL ENGINEER
2024-05-15

ISSUED FOR
ISSUED FOR PROPOSALS AND PERMIT

REVISIONS

No.	DESCRIPTION	DATE

KEY PLAN

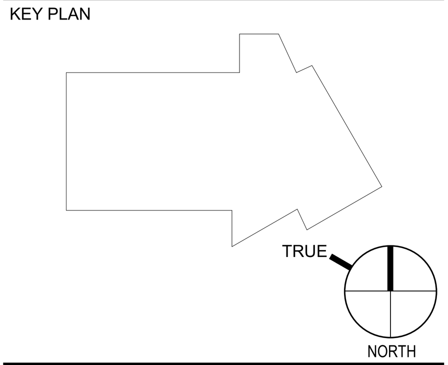

SHEET TITLE
PANEL SCHEDULES

SCALE

DATE 05/15/2024

PROJECT NUMBER 2319

SHEET NUMBER
E121

PANEL: HE

LOCATION: ELEC ROOM
FED FROM: ATS-E

MTG:			BUS:			OPT:			ENCL:		MAIN:				
	X	SURFACE		100%	NEUTRAL		X	INT SPD		NEMA		60 A	BUS	3 ø 4	WIRE
		FLUSH		X	SYS GND			FTL		TYPE 1		CU/SN		22	KAIC
		STRUT			ISO GND			FUSIBLE		STEEL		60 A	MCB	480Y/277	VOLT

WIRE SIZE	LOAD DESCRIPTION	LOAD TYPE	TRIP RATE / P	CKT NO	A (kVA)		B (kVA)		C (kVA)		CKT NO	P / TRIP RATE	LOAD TYPE	LOAD DESCRIPTION	WIRE SIZE
1-#12, 1-#12, 1-#12, 3/4"C	EMERGENCY EXIT SIGNS - LEVEL 1	L	20 / 1	1	0.1	0.5					2	1 / 20	L	EMERGENCY LIGHTING - LEVEL 1	1-#12, 1-#12, 1-#12, 3/4"C
1-#12, 1-#12, 1-#12, 3/4"C	EMERGENCY EXIT SIGNS - LEVEL 2	L	20 / 1	3			0.1	0.5			4	1 / 20	L	EMERGENCY LIGHTING - LEVEL 1	1-#12, 1-#12, 1-#12, 3/4"C
1-#12, 1-#12, 1-#12, 3/4"C	EMERGENCY EXIT SIGNS - LEVEL 3	L	20 / 1	5					0.1	0.5	6	1 / 20	L	EMERGENCY LIGHTING - LEVEL 1	1-#12, 1-#12, 1-#12, 3/4"C
--	SPARE	--	20 / 1	7	0.0	0.5					8	1 / 20	L	EMERGENCY LIGHTING - LEVEL 2	1-#12, 1-#12, 1-#12, 3/4"C
--	SPARE	--	20 / 1	9			0.0	0.5			10	1 / 20	L	EMERGENCY LIGHTING - LEVEL 2	1-#12, 1-#12, 1-#12, 3/4"C
--	SPARE	--	20 / 1	11					0.0	0.5	12	1 / 20	L	EMERGENCY LIGHTING - LEVEL 2	1-#12, 1-#12, 1-#12, 3/4"C
--	SPACE	--	-- / 1	13	--	0.5					14	1 / 20	L	EMERGENCY LIGHTING - LEVEL 3	1-#12, 1-#12, 1-#12, 3/4"C
--	SPACE	--	-- / 1	15			--	0.5			16	1 / 20	L	EMERGENCY LIGHTING - LEVEL 3	1-#12, 1-#12, 1-#12, 3/4"C
--	SPACE	--	-- / 1	17					--	0.5	18	1 / 20	L	EMERGENCY LIGHTING - LEVEL 3	1-#12, 1-#12, 1-#12, 3/4"C
--	SPACE	--	-- / 1	19	--	0.0					20	1 / 20	--	SPARE	--
--	SPACE	--	-- / 1	21			--	0.0			22	1 / 20	--	SPARE	--
--	SPACE	--	-- / 1	23					--	0.0	24	1 / 20	--	SPARE	--
				25	0.5	0.0					26	1 / 20	--	SPARE	--
REFER TO ONE LINE DIAGRAM FOR WIRE AND CONDUIT SIZES	TRANSFORMER 'TE'	Spare; Q	30 / 3	27			0.5	0.0			28	1 / 20	--	SPARE	--
				29					0.5	0.0	30	1 / 20	--	SPARE	--
			Total Load:		2 kVA		2 kVA		2 kVA						
			Total Amps:		8 A		7 A		7 A						

LOAD ANALYSIS

LOAD TYPE		CONNECTED	FACTOR	DEMAND	TOTALS	
LIGHTING	L	4740 VA	125.00%	5925 VA		
RECEPTACLE	R	0 VA	0.00%	0 VA	CONNECTED LOAD (kVA)	6 kVA
EQUIPMENT	Q	1500 VA	100.00%	1500 VA	DEMAND LOAD (kVA)	7 kVA
COOLING	C	0 VA	0.00%	0 VA	CONNECTED CURRENT (A)	8 A
HEATING	H	0 VA	0.00%	0 VA	DEMAND CURRENT (A)	9 A
MOTOR	M	0 VA	0.00%	0 VA		
LARGEST MOTOR	G	0 VA	0.00%	0 VA		
KITCHEN	K	0 VA	0.00%	0 VA		
EXISTING	X	0 VA	0.00%	0 VA		

NOTES:
ALL WIRING FOR 20A/1P CKT. SHALL CONSIST OF 2#12, 1#12G IN 3/4"C UNLESS OTHERWISE NOTED.
* PROVIDE A BREAKER WITH GFCI ** ROUTE CIRCUIT THROUGH LIGHTING CONTACTOR

PANEL: LE

LOCATION: ELEC ROOM
FED FROM: TE

MTG:			BUS:			OPT:			ENCL:		MAIN:				
	X	SURFACE		100%	NEUTRAL		X	INT SPD		NEMA		60 A	BUS	3 ø 4	WIRE
		FLUSH		X	SYS GND			FTL		TYPE 1		CU/SN		10	KAIC
		STRUT			ISO GND			FUSIBLE		STEEL		60 A	MCB	208Y/120	VOLT

WIRE SIZE	LOAD DESCRIPTION	LOAD TYPE	TRIP RATE / P	CKT NO	A (kVA)		B (kVA)		C (kVA)		CKT NO	P / TRIP RATE	LOAD TYPE	LOAD DESCRIPTION	WIRE SIZE
1-#12, 1-#12, 1-#12, 3/4"C	FIRE ALARM CONTROL PANEL - ELECTRICAL...	Q	20 / 1	1	0.5	0.0					2	1 / 20	--	SPARE	--
1-#12, 1-#12, 1-#12, 3/4"C	FIRE ALARM POWER SUPPLY - ELECTRICAL...	Q	20 / 1	3			0.5	0.0			4	1 / 20	--	SPARE	--
1-#12, 1-#12, 1-#12, 3/4"C	FIRE ALARM POWER SUPPLY - ELECTRICAL...	Q	20 / 1	5					0.5	0.0	6	1 / 20	--	SPARE	--
--	SPARE	--	20 / 1	7	0.0	0.0					8	1 / 20	--	SPARE	--
--	SPARE	--	20 / 1	9			0.0	0.0			10	1 / 20	--	SPARE	--
--	SPARE	--	20 / 1	11					0.0	0.0	12	1 / 20	--	SPARE	--
--	SPACE	--	-- / 1	13	--	--					14	1 / --	--	SPACE	--
--	SPACE	--	-- / 1	15			--	--			16	1 / --	--	SPACE	--
--	SPACE	--	-- / 1	17					--	--	18	1 / --	--	SPACE	--
--	SPACE	--	-- / 1	19	--	--					20	1 / --	--	SPACE	--
--	SPACE	--	-- / 1	21			--	--			22	1 / --	--	SPACE	--
--	SPACE	--	-- / 1	23					--	--	24	1 / --	--	SPACE	--
--	SPACE	--	-- / 1	25	--	--					26	1 / --	--	SPACE	--
--	SPACE	--	-- / 1	27			--	--			28	1 / --	--	SPACE	--
--	SPACE	--	-- / 1	29					--	--	30	1 / --	--	SPACE	--
			Total Load:		1 kVA		1 kVA		1 kVA						
			Total Amps:		4 A		4 A		4 A						

LOAD ANALYSIS

LOAD TYPE		CONNECTED	FACTOR	DEMAND	TOTALS	
LIGHTING	L	0 VA	0.00%	0 VA		
RECEPTACLE	R	0 VA	0.00%	0 VA	CONNECTED LOAD (kVA)	2 kVA
EQUIPMENT	Q	1500 VA	100.00%	1500 VA	DEMAND LOAD (kVA)	2 kVA
COOLING	C	0 VA	0.00%	0 VA	CONNECTED CURRENT (A)	4 A
HEATING	H	0 VA	0.00%	0 VA	DEMAND CURRENT (A)	4 A
MOTOR	M	0 VA	0.00%	0 VA		
LARGEST MOTOR	G	0 VA	0.00%	0 VA		
KITCHEN	K	0 VA	0.00%	0 VA		
EXISTING	X	0 VA	0.00%	0 VA		

NOTES:
ALL WIRING FOR 20A/1P CKT. SHALL CONSIST OF 2#12, 1#12G IN 3/4"C UNLESS OTHERWISE NOTED.
* PROVIDE A BREAKER WITH GFCI ** ROUTE CIRCUIT THROUGH LIGHTING CONTACTOR

PANEL: L1A

LOCATION: ELEC ROOM
FED FROM: T1A

MTG:			BUS:			OPT:			ENCL:		MAIN:				
	X	SURFACE		200%	NEUTRAL		X	INT SPD		NEMA		150 A	BUS	3 ø 4	WIRE
		FLUSH		X	SYS GND		X	FTL		TYPE 1		CU/SN		10	KAIC
		STRUT			ISO GND			FUSIBLE		STEEL		150 A	MCB	208Y/120	VOLT

WIRE SIZE	LOAD DESCRIPTION	LOAD TYPE	TRIP RATE / P	CKT NO	A (kVA)		B (kVA)		C (kVA)		CKT NO	P / TRIP RATE	LOAD TYPE	LOAD DESCRIPTION	WIRE SIZE
1-#12, 1-#12, 1-#12, 3/4"C	PROJECTOR - TRAINING 102	Q	20 / 1	1	1.0	1.0					2	1 / 20	Q	PROJECTION SCREEN - TRAINING 102	1-#12, 1-#12, 1-#12, 3/4"C
1-#12, 1-#12, 1-#12, 3/4"C	PROJECTOR - TRAINING 102	Q	20 / 1	3			1.0	1.0			4	1 / 20	Q	PROJECTION SCREEN - TRAINING 102	1-#12, 1-#12, 1-#12, 3/4"C
1-#12, 1-#12, 1-#12, 3/4"C	AV CABINET - TRAINING 102	R	20 / 1	5					0.2	0.9	6	1 / 20	Q	RETRACTABLE PARTITION - TRAINING 102	1-#12, 1-#12, 1-#12, 3/4"C
1-#12, 1-#12, 1-#12, 3/4"C	AV CABINET - TRAINING 102	R	20 / 1	7	0.2	0.9					8	1 / 20	Q	RETRACTABLE PARTITION - TRAINING 102	1-#12, 1-#12, 1-#12, 3/4"C
1-#12, 1-#12, 1-#12, 3/4"C	FLR RECEPTACLE - TRAINING 102	R	20 / 1	9			0.4	0.7			10	1 / 20	R	RECEPTACLE - TRAINING 102	1-#12, 1-#12, 1-#12, 3/4"C
1-#12, 1-#12, 1-#12, 3/4"C	FLR RECEPTACLE - TRAINING 102	R	20 / 1	11					0.4	0.9	12	1 / 20	R	RECEPTACLE - TRAINING 102	1-#12, 1-#12, 1-#12, 3/4"C
1-#12, 1-#12, 1-#12, 3/4"C	FLR RECEPTACLE - TRAINING 102	R	20 / 1	13	0.4	0.4					14	1 / 20	R	FLR RECEPTACLE - TRAINING 102	1-#12, 1-#12, 1-#12, 3/4"C
1-#12, 1-#12, 1-#12, 3/4"C	FLR RECEPTACLE - TRAINING 102	R	20 / 1	15			0.4	0.4			16	1 / 20	R	FLR RECEPTACLE - TRAINING 102	1-#12, 1-#12, 1-#12, 3/4"C
1-#12, 1-#12, 1-#12, 3/4"C	FLR RECEPTACLE - TRAINING 102	R	20 / 1	17					0.4	0.4	18	1 / 20	R	FLR RECEPTACLE - TRAINING 102	1-#12, 1-#12, 1-#12, 3/4"C
1-#12, 1-#12, 1-#12, 3/4"C	FLR RECEPTACLE - TRAINING 102	R	20 / 1	19	0.4	0.4					20	1 / 20	R	FLR RECEPTACLE - TRAINING 102	1-#12, 1-#12, 1-#12, 3/4"C
1-#12, 1-#12, 1-#12, 3/4"C	FLR RECEPTACLE - TRAINING 102	R	20 / 1	21			0.4	0.4			22	1 / 20	R	FLR RECEPTACLE - TRAINING 102	1-#12, 1-#12, 1-#12, 3/4"C
1-#12, 1-#12, 1-#12, 3/4"C	FLR RECEPTACLE - TRAINING 102	R	20 / 1	23					0.4	0.4	24	1 / 20	R	FLR RECEPTACLE - TRAINING 102	1-#12, 1-#12, 1-#12, 3/4"C
1-#12, 1-#12, 1-#12, 3/4"C	FLR RECEPTACLE - TRAINING 102	R	20 / 1	25	0.4	0.4					26	1 / 20	R	FLR RECEPTACLE - TRAINING 102	1-#12, 1-#12, 1-#12, 3/4"C
1-#12, 1-#12, 1-#12, 3/4"C	RECEPTACLE - TRAINING 102	R	20 / 1	27			0.9	0.4			28	1 / 20	R	FLR RECEPTACLE - TRAINING 102	1-#12, 1-#12, 1-#12, 3/4"C
1-#12, 1-#12, 1-#12, 3/4"C	RECEPTACLE - TRAINING 102	R	20 / 1	29					0.7	0.4	30	1 / 20	R	FLR RECEPTACLE - TRAINING 102	1-#12, 1-#12, 1-#12, 3/4"C
1-#12, 1-#12, 1-#12, 3/4"C	RECEPTACLE - TRAINING 102	R	20 / 1	31	0.4	0.4					32	1 / 20	R	RECEPTACLE - TRAINING 102	1-#12, 1-#12, 1-#12, 3/4"C
1-#12, 1-#12, 1-#12, 3/4"C	FLR RECEPTACLE - TRAINING 102	R	20 / 1	33			0.4	0.4			34	1 / 20	R	FLR RECEPTACLE - TRAINING 102	1-#12, 1-#12, 1-#12, 3/4"C
--	SPARE	--	20 / 1	35					0.0	0.0	36	1 / 20	--	SPARE	--
--	SPARE	--	20 / 1	37	0.0	0.0					38	1 / 20	--	SPARE	--
--	SPARE	--	20 / 1	39			0.0	0.0			40	1 / 20	--	SPARE	--
--	SPARE	--	20 / 1	41					0.0	0.0	42	1 / 20	--	SPARE	--
--	SPARE	--	20 / 1	43	0.0	0.0					44	1 / 20	--	SPARE	--
--	SPARE	--	20 / 1	45			0.0	0.0			46	1 / 20	--	SPARE	--
--	SPARE	--	20 / 1	47					0.0	0.0	48	1 / 20	--	SPARE	--
--	SPARE	--	20 / 1	49	0.0	0.0					50	1 / 20	--	SPARE	--
--	SPARE	--	20 / 1	51			0.0	0.0			52	1 / 20	--	SPARE	--
--	SPARE	--	20 / 1	53					0.0	0.0	54	1 / 20	--	SPARE	--
			Total Load:		6 kVA		7 kVA		5 kVA						
			Total Amps:		51 A		56 A		41 A						

LOAD ANALYSIS

LOAD TYPE		CONNECTED	FACTOR	DEMAND	TOTALS	
LIGHTING	L	0 VA	0.00%	0 VA		
RECEPTACLE	R	11520 VA	93.40%	10760 VA	CONNECTED LOAD (kVA)	17 kVA
EQUIPMENT	Q	5800 VA	100.00%	5800 VA	DEMAND LOAD (kVA)	17 kVA
COOLING	C	0 VA	0.00%	0 VA	CONNECTED CURRENT (A)	48 A
HEATING	H	0 VA	0.00%	0 VA	DEMAND CURRENT (A)	46 A
MOTOR	M	0 VA	0.00%	0 VA		
LARGEST MOTOR	G	0 VA	0.00%	0 VA		
KITCHEN	K	0 VA	0.00%	0 VA		
EXISTING	X	0 VA	0.00%	0 VA		

NOTES:
ALL WIRING FOR 20A/1P CKT. SHALL CONSIST OF 2#12, 1#12G IN 3/4"C UNLESS OTHERWISE NOTED.
* PROVIDE A BREAKER WITH GFCI ** ROUTE CIRCUIT THROUGH LIGHTING CONTACTOR

PANEL: H3

LOCATION: ELEC ROOM
FED FROM: MSB

MTG:			BUS:			OPT:			ENCL:		MAIN:				
	X	SURFACE		100%	NEUTRAL		X	INT SPD		NEMA		400 A	BUS	3 ø 4	WIRE
		FLUSH		X	SYS GND		X	FTL		TYPE 1		CU/SN		22	KAIC
		STRUT			ISO GND			FUSIBLE		STEEL		400 A	MCB	480Y/277	VOLT

WIRE SIZE	LOAD DESCRIPTION	LOAD TYPE	TRIP RATE / P	CKT NO	A (kVA)		B (kVA)		C (kVA)		CKT NO	P / TRIP RATE	LOAD TYPE	LOAD DESCRIPTION	WIRE SIZE
1-#12, 1-#12, 1-#12, 3/4"C	FPT-3-1	M; H	20 / 1	1	2.5	2.1					2	1 / 20	L	LIGHTING - OFFICES/WORK	1-#12, 1-#12, 1-#12, 3/4"C
1-#12, 1-#12, 1-#12, 3/4"C	FPT-3-2	M; H	20 / 1	3			3.5	1.2			4	1 / 20	L	LIGHTING - BULLPEN 320	1-#12, 1-#12, 1-#12, 3/4"C
1-#12, 1-#12, 1-#12, 3/4"C	FPT-3-3	M; H	20 / 1	5					2.5	2.0	6	1 / 20	L	LIGHTING - RM 305-313	1-#12, 1-#12, 1-#12, 3/4"C
1-#12, 1-#12, 1-#12, 3/4"C	FPT-3-4	M; H	20 / 1	7	3.5	1.9					8	1 / 20	L	LIGHTING -RM 320,345-347	1-#12, 1-#12, 1-#12, 3/4"C
1-#10, 1-#10, 1-#10, 3/4"C	FPT-3-5	M; H	30 / 1	9			5.5	0.0			10	1 / 20	--	SPARE	--
1-#10, 1-#10, 1-#10, 3/4"C	FPT-3-6	M; H	30 / 1	11					6.5	0.0	12	1 / 20	--	SPARE	--
				13	3.0	0.0					14	1 / 20	--	SPARE	--
3-#12, 1-#12, 1-#12, 3/4"C	FPT-3-7	M; H	20 / 3	15			3.0	0.0			16	1 / 20	--	SPARE	--
				17					3.0	0.0	18	1 / 20	--	SPARE	--
1-#10, 1-#10, 1-#10, 3/4"C	FPT-3-8	M; H	30 / 1	19	5.5	0.0					20	1 / 20	--	SPARE	--
1-#10, 1-#10, 1-#10, 3/4"C	FPT-3-9	M; H	30 / 1	21			4.5	0.0			22	1 / 20	--	SPARE	--
1-#8, 1-#8, 1-#10, 3/4"C	FPT-3-10	M; H	40 / 1	23					7.0	0.0	24	1 / 20	--	SPARE	--
				25	3.7	0.0					26	1 / 20	--	SPARE	--
3-#12, 1-#12, 1-#12, 3/4"C	FPT-3-11	M; H	20 / 3	27			3.7	0.0			28	1 / 20	--	SPARE	--
				29					3.7	0.0	30	1 / 20	--	SPARE	--
				31	7.5	0.0					32	1 / 20	--	SPARE	--
3-#10, 1-#10, 3/4"C	AHU-3 VIA VFD	M	30 / 3	33			7.5	0.0			34	1 / 20	--	SPARE	--
				35					7.5	0.0	36	1 / 20	--	SPARE	--
				37	5.0	22.0					38				
3-#10, 1-#10, 3/4"C	EDH-3 VIA 30AS/NF/3P/NEMA-1 DS	H	30 / 3	39			5.0	21.4			40	3 / 100	M; Spare; Q; R	TRANSFORMER 'T3'	REFER TO ONE LINE DIAGRAM FOR WIRE AND CONDUIT SIZES
				41					5.0	20.6	42				
--	SPACE	--	-- / 1	43	--	--					44	1 / --	--	SPACE	--
--	SPACE	--	-- / 1	45			--	--			46	1 / --	--	SPACE	--
--	SPACE	--	-- / 1	47					--	--	48	1 / --	--	SPACE	--
--	SPACE	--	-- / 1	49	--	--					50	1 / --	--	SPACE	--
--	SPACE	--	-- / 1	51			--	--			52	1 / --	--	SPACE	--
--	SPACE	--	-- / 1	53					--	--	54	1 / --	--	SPACE	--
--	SPACE	--	-- / 1	55	--	--					56	1 / --	--	SPACE	--
--	SPACE	--	-- / 1	57			--	--			58	1 / --	--	SPACE	--
--	SPACE	--	-- / 1	59					--	--	60	1 / --	--	SPACE	--
--	SPACE	--	-- / 1	61	--	--					62	1 / --	--	SPACE	--
--	SPACE	--	-- / 1	63			--	--			64	1 / --	--	SPACE	--
--	SPACE	--	-- / 1	65					--	--	66	1 / --	--	SPACE	--
--	SPACE	--	-- / 1	67	--	--					68	1 / --	--	SPACE	--
--	SPACE	--	-- / 1	69			--	--			70	1 / --	--	SPACE	--
--	SPACE	--	-- / 1	71					--	--	72	1 / --	--	SPACE	--
--	SPACE	--	-- / 1	73	--	--					74	1 / --	--	SPACE	--
--	SPACE	--	-- / 1	75			--	--			76	1 / --	--	SPACE	--
--	SPACE	--	-- / 1	77					--	--	78	1 / --	--	SPACE	--
--	SPACE	--	-- / 1	79	--	--					80	1 / --	--	SPACE	--
--	SPACE	--	-- / 1	81			--	--			82	1 / --	--	SPACE	--
--	SPACE	--	-- / 1	83					--	--	84	1 / --	--	SPACE	--
			Total Load:		57 kVA		55 kVA		58 kVA						
			Total Amps:		205 A		199 A		209 A						

LOAD ANALYSIS

LOAD TYPE		CONNECTED	FACTOR	DEMAND	TOTALS	
LIGHTING	L	7221 VA	125.00%	9026 VA		
RECEPTACLE	R	42840 VA	61.67%	26420 VA	CONNECTED LOAD (kVA)	170 kVA
EQUIPMENT	Q	20400 VA	100.00%	20400 VA	DEMAND LOAD (kVA)	155 kVA
COOLING	C	0 VA	0.00%	0 VA	CONNECTED CURRENT (A)	204 A
HEATING	H	69000 VA	100.00%	69000 VA	DEMAND CURRENT (A)	186 A
MOTOR	M	30125 VA	100.00%	30125 VA		
LARGEST MOTOR	G	0 VA	0.00%	0 VA		
KITCHEN	K	0 VA	0.00%	0 VA		
EXISTING	X	0 VA	0.00%	0 VA		

NOTES:
ALL WIRING FOR 20A/1P CKT. SHALL CONSIST OF 2#12, 1#12G IN 3/4"C UNLESS OTHERWISE NOTED.
* PROVIDE A BREAKER WITH GFCI ** ROUTE CIRCUIT THROUGH LIGHTING CONTACTOR

PANEL: L3

LOCATION: ELEC ROOM
FED FROM: T3

MTG:			BUS:			OPT:			ENCL:		MAIN:				
	X	SURFACE		200%	NEUTRAL		X	INT SPD		NEMA		225 A	BUS	3 ø 4	WIRE
		FLUSH		X	SYS GND		X	FTL		TYPE 1		CU/SN		10	KAIC
		STRUT			ISO GND			FUSIBLE		STEEL		225 A	MCB	208Y/120	VOLT

WIRE SIZE	LOAD DESCRIPTION	LOAD TYPE	TRIP RATE / P	CKT NO	A (kVA)		B (kVA)		C (kVA)		CKT NO	P / TRIP RATE	LOAD TYPE	LOAD DESCRIPTION	WIRE SIZE
1-#12, 1-#12, 1-#12, 3/4"C	RECEPTACLE - ELECTRICAL 334	R	20 / 1	1	0.2	0.7					2	1 / 20	R	RECEPTACLE - APSP SV 321	1-#12, 1-#12, 1-#12, 3/4"C
1-#12, 1-#12, 1-#12, 3/4"C	RECEPTACLE - RR 305,306	R	20 / 1	3			0.4	0.7			4	1 / 20	R	RECEPTACLE - APSP SV 322	1-#12, 1-#12, 1-#12, 3/4"C
1-#12, 1-#12, 1-#12, 3/4"C	* DRINKING FOUNTAIN - CORRIDOR 302	Q	20 / 1	5					0.6	0.7	6	1 / 20	R	RECEPTACLE - APSP SV 323	1-#12, 1-#12, 1-#12, 3/4"C
1-#12, 1-#12, 1-#12, 3/4"C	RECEPTACLE - ASST DIRECTOR 08	R	20 / 1	7	0.5	0.7					8	1 / 20	R	RECEPTACLE - APSP SV 324	1-#12, 1-#12, 1-#12, 3/4"C
1-#12, 1-#12, 1-#12, 3/4"C	RECEPTACLE - ASST DIRECTOR 08	R	20 / 1	9			0.5	0.7			10	1 / 20	R	RECEPTACLE - APSP SV 325	1-#12, 1-#12, 1-#12, 3/4"C
1-#12, 1-#12, 1-#12, 3/4"C	RECEPTACLE - ASST DIREC OFF 312	R	20 / 1	11					0.5	0.7	12	1 / 20	R	RECEPTACLE - APSP SV 326	1-#12, 1-#12, 1-#12, 3/4"C
1-#12, 1-#12, 1-#12, 3/4"C	RECEPTACLE - ASST DIREC OFF 312	R	20 / 1	13	0.7	1.1					14	1 / 20	R	RECEPTACLE - APSP M1 327	1-#12, 1-#12, 1-#12, 3/4"C
1-#12, 1-#12, 1-#12, 3/4"C	RECEPTACLE - CONF 310	R	20 / 1	15			0.7	0.7			16	1 / 20	R	RECEPTACLE - PMO SV 329	1-#12, 1-#12, 1-#12, 3/4"C
1-#12, 1-#12, 1-#12, 3/4"C	RECEPTACLE - CONF 310	R	20 / 1	17					0.9	0.7	18	1 / 20	R	RECEPTACLE - PMO TL2 330	1-#12, 1-#12, 1-#12, 3/4"C
1-#12, 1-#12, 1-#12, 3/4"C	RECEPTACLE - DIREC OFF 311	R	20 / 1	19	0.9	0.7					20	1 / 20	R	RECEPTACLE - PMO TL1 331	1-#12, 1-#12, 1-#12, 3/4"C
1-#12, 1-#12, 1-#12, 3/4"C	RECEPTACLE - DIREC OFF 311	R	20 / 1	21			0.5	0.7			22	1 / 20	R	RECEPTACLE - TESTING HUDDLE 309	1-#12, 1-#12, 1-#12, 3/4"C
1-#12, 1-#12, 1-#12, 3/4"C	RECEPTACLE - VIDEO 313	R	20 / 1	23					0.7	0.5	24	1 / 20	R	RECEPTACLE - TESTING HUDDLE 309	1-#12, 1-#12, 1-#12, 3/4"C
1-#12, 1-#12, 1-#12, 3/4"C	RECEPTACLE - VIDEO 31	R	20 / 1	25	0.7	1.5					26	1 / 20	Q	COPIER - WORK RM 331	1-#12, 1-#12, 1-#12, 3/4"C
1-#12, 1-#12, 1-#12, 3/4"C	RECEPTACLE - CORRIDOR 302	R	20 / 1	27			0.7	1.5			28	1 / 20	Q	COPIER - WORK RM 331	1-#12, 1-#12, 1-#12, 3/4"C
1-#12, 1-#12, 1-#12, 3/4"C	REFRIGERATOR - BREAK RM 345	Q	20 / 1	29					1.2	0.5	30	1 / 20	R	RECEPTACLE - WORK RM 331	1-#12, 1-#12, 1-#12, 3/4"C
1-#12, 1-#12, 1-#12, 3/4"C	APPLIANCE - BREAK RM 345	Q	20 / 1	31	1.5	0.7					32				
1-#12, 1-#12, 1-#12, 3/4"C	APPLIANCE - BREAK RM 345	Q	20 / 1	33			1.5	0.7			34	3 / 20	R	POWERED FURNITURE - BULLPEN 320	3-#10, 1-#10, 3/4"C
1-#12, 1-#12, 1-#12, 3/4"C	DISHWASHER - BREAK RM 345	Q	20 / 1	35					1.5	0.7	36				
1-#12, 1-#12, 1-#12, 3/4"C	DISPOSAL - BREAK RM 345	Q	20 / 1	37	0.6	1.4					38	1 / 20	R	POWERED FURNITURE - BULLPEN 320	1-#10, 1-#10, 1-#12, 3/4"C
1-#12, 1-#12, 1-#12, 3/4"C	MICROWAVE - BREAK RM 345	Q	20 / 1	39			1.5	0.7			40				
1-#12, 1-#12, 1-#12, 3/4"C	MICROWAVE - BREAK RM 345	Q	20 / 1	41					1.5	0.7	42	3 / 20	R	POWERED FURNITURE - BULLPEN 320	3-#10, 1-#10, 3/4"C
1-#12, 1-#12, 1-#12, 3/4"C	RECEPTACLE - BULLPEN 320	R	20 / 1	43	0.9	0.7					44				
1-#12, 1-#12, 1-#12, 3/4"C	RECEPTACLE - BULLPEN 320	R	20 / 1	45			1.1	0.7			46	1 / 20	R	POWERED FURNITURE - BULLPEN 320	1-#10, 1-#10, 1-#10, 3/4"C
1-#12, 1-#12, 1-#12, 3/4"C	RECEPTACLE - MECHANICAL 307	R	20 / 1	47					0.5	0.7	48				
1-#12, 1-#12, 1-#12, 3/4"C	SECURITY PANEL - MECHANICAL 307	Q	20 / 1	49	0.5	0.7					50	3 / 20	R	POWERED FURNITURE - BULLPEN 320	3-#10, 1-#10, 3/4"C
1-#12, 1-#12, 1-#12, 3/4"C	DDC PANEL - MECHANICAL 307	Q	20 / 1	51			0.5	0.7			52				
1-#12, 1-#12, 1-#12, 3/4"C	RECEPTACLE - GIS WORKROOM 301	R	20 / 1	53					0.7	0.7	54	1 / 20	R	POWERED FURNITURE - BULLPEN 320	1-#10, 1-#10, 1-#10, 3/4"C
1-#12, 1-#12, 1-#12, 3/4"C	RECEPTACLE - GIS WORKROOM 301	R	20 / 1	55	0.5	0.7					56				
1-#12, 1-#12, 1-#12, 3/4"C	RECEPTACLE - GIS WORKROOM 301	R	20 / 1	57			0.7	0.7			58	3 / 20	R	POWERED FURNITURE - BULLPEN 320	3-#10, 1-#10, 3/4"C
1-#12, 1-#12, 1-#12, 3/4"C	RECEPTACLE - GIS WORKROOM 301	R	20 / 1	59					0.7	0.7	60				
1-#12, 1-#12, 1-#12, 3/4"C	RECEPTACLE - FOYER 300	R	20 / 1	61	0.5	0.7					62	1 / 20	R	POWERED FURNITURE - BULLPEN 320	1-#10, 1-#10, 1-#10, 3/4"C
				63			0.8	1.0			64				
2-#12, 1-#12, 3/4"C	CU-A / FCU-A VIA 30AS/NF/2P/NEMA-3R DS	Q	20 / 2	65					0.8	1.0	66	3 / 20	R	POWERED FURNITURE - BULLPEN 320	3-#10, 1-#10, 3/4"C
				67	0.8	1.0					68				
2-#12, 1-#12, 3/4"C	CU-B / FCU-B VIA 30AS/NF/2P/NEMA-3R DS	Q	20 / 2	69			0.8	0.7			70	1 / 20	R	POWERED FURNITURE - BULLPEN 320	1-#10, 1-#10, 1-#10, 3/4"C
				71					0.8	0.7	72				
2-#12, 1-#12, 3/4"C	CU-C VIA 30AS/NF/2P/NEMA-3R DS	Q	20 / 2	73	0.8	0.7					74	3 / 20	R	POWERED FURNITURE - BULLPEN 320	3-#10, 1-#10, 3/4"C
				75			0.8	0.7			76				
2-#12, 1-#12, 3/4"C	CU-D VIA 30AS/NF/2P/NEMA-3R DS	Q	20 / 2	77					0.8	0.7	78	1 / 20	R	POWERED FURNITURE - BULLPEN 320	1-#10, 1-#10, 1-#10, 3/4"C
1-#12, 1-#12, 1-#12, 3/4"C	EF-1 - ROOF	M	20 / 1	79	0.9	0.5					80	1 / 20	Q	IRRIGATION CONTROLLER	1-#12, 1-#12, 1-#12, 1"C
1-#12, 1-#12, 1-#12, 3/4"C	RECEPTACLE - CORRIDOR 302	R	20 / 1	81			0.2	0.4			82	1 / 20	R	RECEPTACLE - EXTERIOR ROOF	1-#12, 1-#12, 1-#12, 3/4"C
1-#12, 1-#12, 1-#12, 3/4"C	RECEPTACLE - CORRIDOR 302	R	20 / 1	83					0.2	0.0	84	1 / 20	--	SPARE	--
--	SPARE	--	20 / 1	85	0.0	0.0					86	1 / 20	--	SPARE	--
--	SPARE	--	20 / 1	87			0.0	0.0			88	1 / 20	--	SPARE	--
--	SPARE	--	20 / 1	89					0.0	0.0	90	1 / 20	--	SPARE	--
--	SPARE	--	20 / 1	91	0.0	0.0					92	1 / 20	--	SPARE	--
--	SPARE	--	20 / 1	93			0.0	0.0			94	1 / 20	--	SPARE	--
--	SPARE	--	20 / 1	95					0.0	0.0	96	1 / 20	--	SPARE	--
--	SPARE	--	20 / 1	97	0.0	0.0					98	1 / 20	--	SPARE	--
--	SPARE	--	20 / 1	99			0.0	0.0			100	1 / 20	--	SPARE	--
--	SPARE	--	20 / 1	101					0.0	0.0	102	1 / 20	--	SPARE	--
--	SPARE	--	20 / 1	103	0.0	0.0					104	1 / 20	--	SPARE	--
--	SPARE	--	20 / 1	105			0.0	0.0			106	1 / 20	--	SPARE	--
--	SPARE	--	20 / 1	107					0.0	0.0	108	1 / 20	--	SPARE	--
			Total Load:		22 kVA		21 kVA		21 kVA						
			Total Amps:		184 A		179 A		172 A						

LOAD ANALYSIS

LOAD TYPE		CONNECTED	FACTOR	DEMAND	TOTALS	
LIGHTING	L	0 VA	0.00%	0 VA		
RECEPTACLE	R	42840 VA	61.67%	26420 VA	CONNECTED LOAD (kVA)	64 kVA
EQUIPMENT	Q	20400 VA	100.00%	20400 VA	DEMAND LOAD (kVA)	48 kVA
COOLING	C	0 VA	0.00%	0 VA	CONNECTED CURRENT (A)	178 A
HEATING	H	0 VA	0.00%	0 VA	DEMAND CURRENT (A)	132 A
MOTOR	M	900 VA	100.00%	900 VA		
LARGEST MOTOR	G	0 VA	0.00%	0 VA		
KITCHEN	K	0 VA	0.00%	0 VA		
EXISTING	X	0 VA	0.00%	0 VA		

NOTES:
ALL WIRING FOR 20A/1P CKT. SHALL CONSIST OF 2#12, 1#12G IN 3/4"C UNLESS OTHERWISE NOTED.
* PROVIDE A BREAKER WITH GFCI ** ROUTE CIRCUIT THROUGH LIGHTING CONTACTOR

FSGROUP®
ARCHITECTS
13105 Northwest Fwy Suite 1110
Houston Texas 77040
713 344 1752 Office
www.fsdesignbuild.com

PROJECT NAME

THE STATE OF TEXAS
FORT BEND COUNTY

INFORMATION TECHNOLGY BUILDING
EUGENE HEIMANN CIRCLE
FORT BEND COUNTY, TEXAS

CONSULTANTS

Infrastructure Associates
INFRASTRUCTURE ASSOCIATES, INC.
607 RICHMOND AVENUE, SUITE 200
HOUSTON, TEXAS 77057-6267
(713) 622-0120 PH (713) 622-0557 FAX
TBPE FIRM REGISTRATION #F-4506
WWW.IAHOUSTON.COM

PROFESSIONAL SEAL

STATE OF TEXAS
SEVAK KALANTARIANS
97498
LICENSED
PROFESSIONAL ENGINEER
2024-05-15

ISSUED FOR

ISSUED FOR PROPOSALS AND PERMIT

REVISIONS

No.	DESCRIPTION	DATE

KEY PLAN

TRUE NORTH

SHEET TITLE

PANEL SCHEDULES

SCALE

DATE
05/15/2024

PROJECT NUMBER
2319

SHEET NUMBER

E122

ELECTRICAL GENERAL NOTES:

1. PROVIDE BACK BOXES AND CONDUITS FOR TELECOM AND SECURITY. COORDINATE WITH TELECOM AND SECURITY DRAWINGS FOR LOCATIONS AND REQUIREMENTS.

KEYED NOTE LEGEND

1	PROVIDE POWER FOR RETRACTABLE PARTITION. COORDINATE FINAL POWER INPUT LOCATION WITH RETRACTABLE PARTITION INSTALLER.
2	PROVIDE POWER/DATA ON CEILING FOR PROJECTOR. COORDINATE FINAL OUTLET LOCATION WITH PROJECTOR LOCATION.
3	PROVIDE J–BOX FOR PROJECTION SCREEN POWER ABOVE ACCESSIBLE CEILING (COORDINATE FINAL LOCATION WITH PROJECTION SCREEN POWER INPUT LOCATION). PROVIDE 3/4"C FROM MOTOR TO PROJECTION SCREEN CONTROLLER LOCATION (COORDINATE EXACT LOCATION WITH ARCHITECT PRIOR TO ROUGH–IN). CONTROLLER PROVIDED BY PROJECTION SCREEN VENDOR.
4	FIRE ALARM ANNUNCIATOR PANEL (FAAP) TO BE LOCATED IN LOBBY AT MAIN BUILDING ENTRANCE. PROVIDE 1"C EMT FROM FIRE ALARM ANNUNCIATOR PANEL TO MAIN FIRE ALARM CONTROL PANEL WITH PULLSTRING FOR FIRE ALARM VENDOR USE.
5	GENERATOR ANNUNCIATOR PANEL, LOCATE ADJACENT TO FAAP. PROVIDE 1"C EMT FROM GENERATOR ANNUNCIATOR PANEL TO GENERATOR WITH REQUIRED DATA CABLING.
6	PROVIDE AND INSTALL (2) J–BOXES MOUNTED FLUSH WITH THE FINISHED WALL, (1) FOR POWER AND (1) FOR DATA TO THE ELECTRICAL FURNITURE SYSTEM. CONNECT FURNITURE THROUGH FURNITURE WHIP TO J–BOX FOR CIRCUITING INDICATED. ROUTE (1)3/4"C FOR POWER AND (1)1–1/2"C FOR DATA UP TO ACCESSIBLE CEILING SPACE. COORDINATE WITH ARCHITECT AND POWERED FURNITURE VENDOR FOR EXACT LOCATIONS TO ROUGH–IN OF POWER AND DATA PRIOR TO BEGINNING WORK.
7	PROVIDE AND INSTALL FURNITURE FEED FLOORBOX AND PROVIDE FINAL CONNECTION TO THE ELECTRICAL FURNITURE SYSTEM. CONNECT FURNITURE THROUGH FURNITURE WHIP TO FLOORBOX FOR CIRCUITING INDICATED. PROVIDE (1)3/4"C FOR POWER AND (1)1–1/2"C FOR DATA. COORDINATE WITH ARCHITECT AND POWERED FURNITURE VENDOR FOR EXACT LOCATIONS TO ROUGH–IN OF POWER AND DATA PRIOR TO BEGINNING WORK.

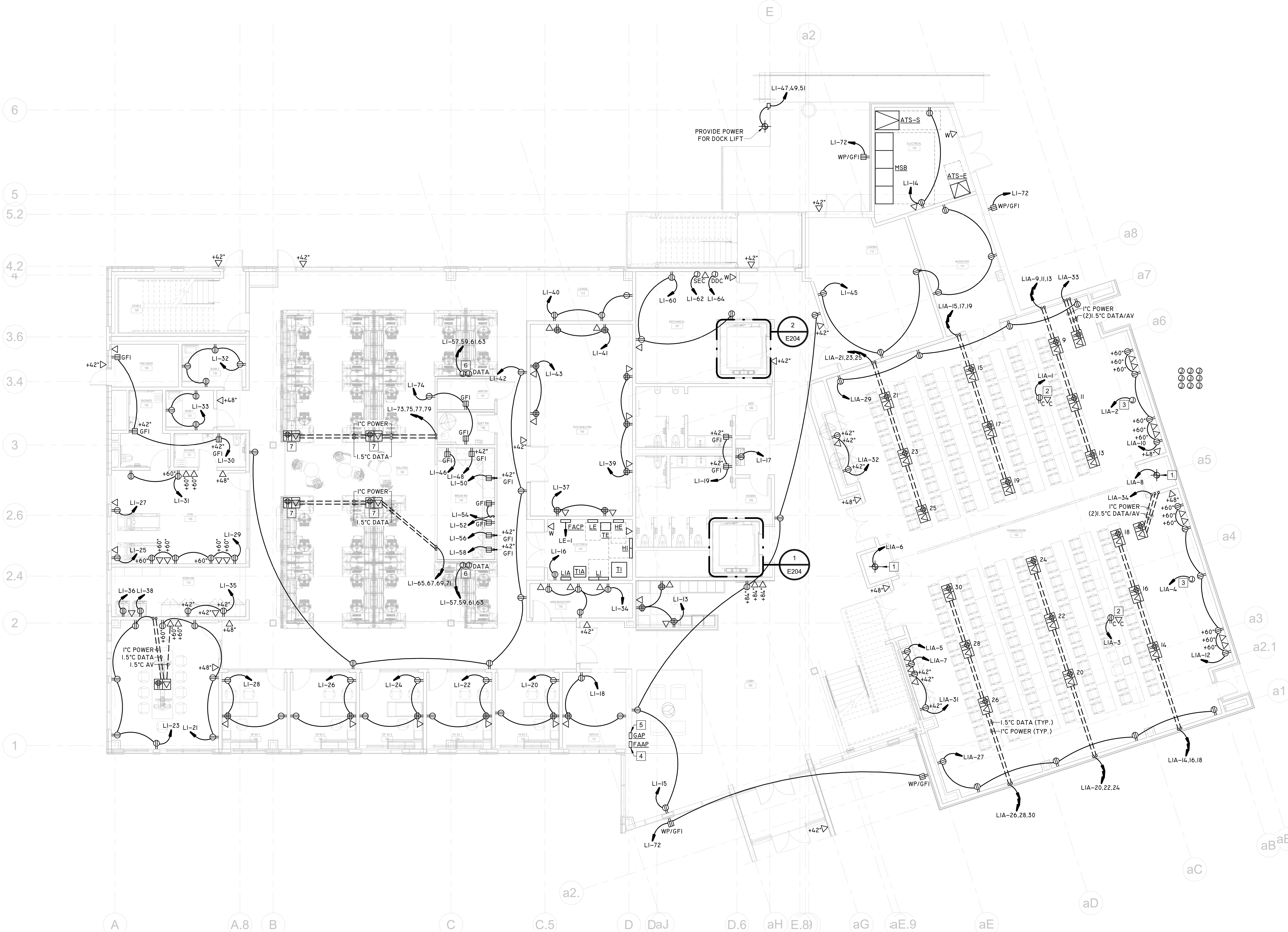

1 E201 LEVEL 1 - FLOOR PLAN - POWER
SCALE : 1/8" = 1'-0"

FSGROUP®
ARCHITECTS
13105 Northwest Fwy Suite 1110
Houston Texas 77040
713 344 1752 Office
www.fsdesignbuild.com

PROJECT NAME

INFORMATION TECHNOLGY BUILDING
EUGENE HEIMANN CIRCLE
FORT BEND COUNTY . TEXAS

CONSULTANTS

Infrastructure Associates
INFRASTRUCTURE ASSOCIATES, INC.
6117 RICHMOND AVENUE, SUITE 200
HOUSTON, TEXAS 77057–6267
(713) 622–0120 PH (713) 622–0557 FAX
TBPE FIRM REGISTRATION #F–4506
WWW.IAHOUSTON.COM

PROFESSIONAL SEAL

ISSUED FOR

ISSUED FOR PROPOSALS AND PERMIT

REVISIONS

No.	DESCRIPTION	DATE

KEY PLAN

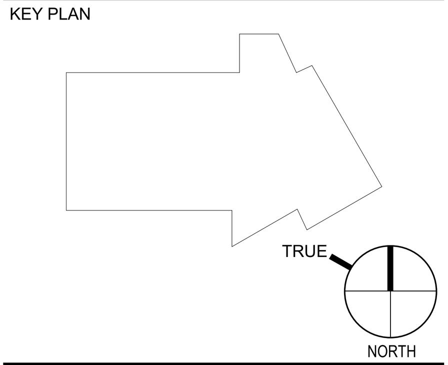

SHEET TITLE

FLOOR PLAN LEVEL 1 - POWER

SCALE 1/8" = 1'-0"

DATE 05/15/2024

PROJECT NUMBER 2319

SHEET NUMBER

E201

ELECTRICAL GENERAL NOTES:

1. PROVIDE BACK BOXES AND CONDUITS FOR TELECOM AND SECURITY. COORDINATE WITH TELECOM AND SECURITY DRAWINGS FOR LOCATIONS AND REQUIREMENTS.

KEYED NOTE LEGEND

1	PROVIDE AND INSTALL (2) J–BOXES MOUNTED FLUSH WITH THE FINISHED WALL, (1) FOR POWER AND (1) FOR DATA TO THE ELECTRICAL FURNITURE SYSTEM. CONNECT FURNITURE THROUGH FURNITURE WHIP TO J–BOX FOR CIRCUITING INDICATED. ROUTE (1)3/4"C FOR POWER AND (1)1–1/2"C FOR DATA UP TO ACCESSIBLE CEILING SPACE. COORDINATE WITH ARCHITECT AND POWERED FURNITURE VENDOR FOR EXACT LOCATIONS TO ROUGH–IN OF POWER AND DATA PRIOR TO BEGINNING WORK.
2	PROVIDE AND INSTALL FURNITURE FEED FIRE–RATED POKE–THROUGH AND PROVIDE FINAL CONNECTION TO THE ELECTRICAL FURNITURE SYSTEM. CONNECT FURNITURE THROUGH FURNITURE WHIP TO POKE–THROUGH FOR CIRCUITING INDICATED. PROVIDE (1)3/4"C FOR POWER AND (1)1–1/2"C FOR DATA. COORDINATE WITH ARCHITECT AND POWERED FURNITURE VENDOR FOR EXACT LOCATIONS TO ROUGH–IN OF POWER AND DATA PRIOR TO BEGINNING WORK.

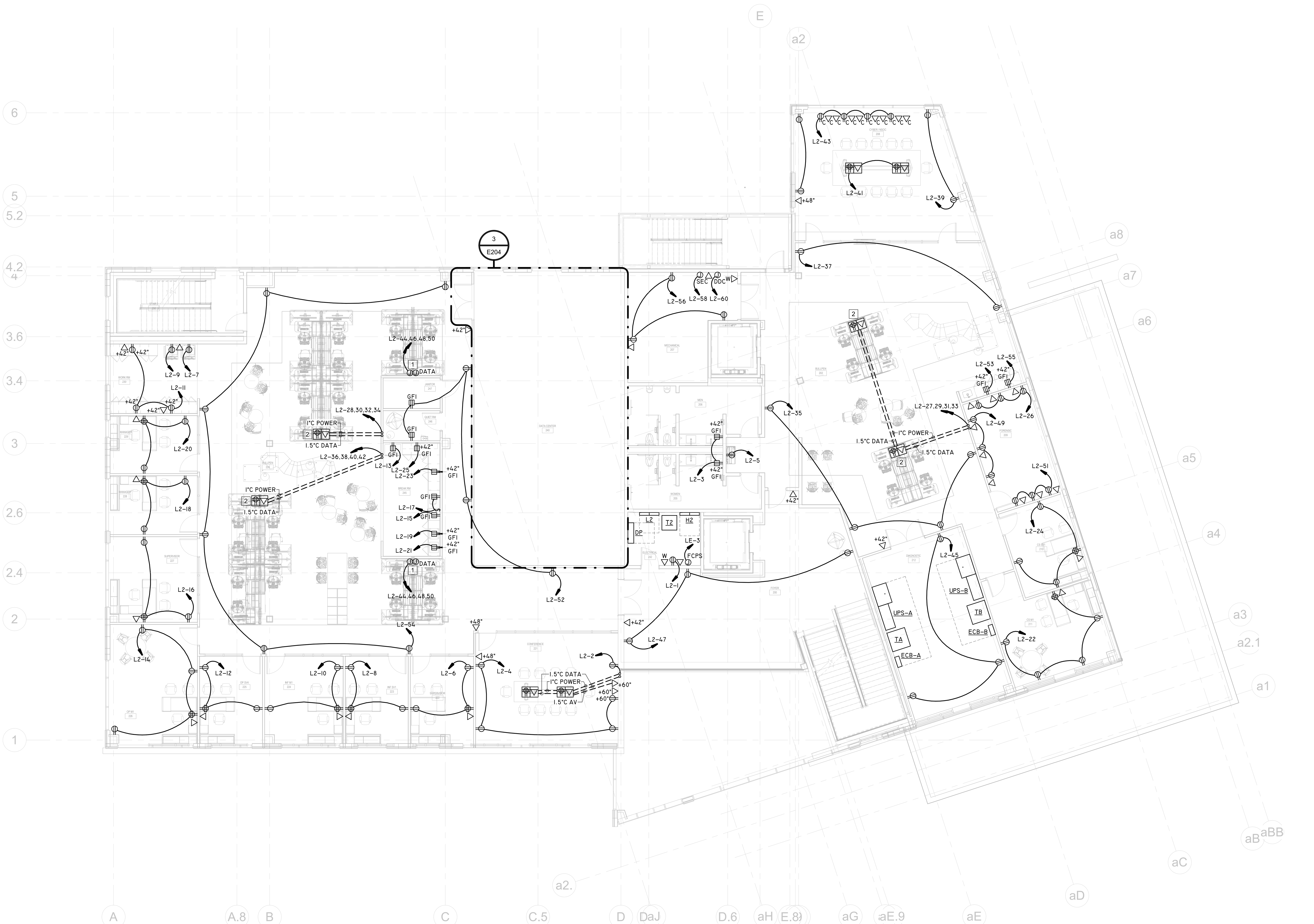

1
E202
LEVEL 2 - FLOOR PLAN - POWER
SCALE : 1/8" = 1'-0"

FSGROUP®
ARCHITECTS
13105 Northwest Fwy Suite 1110
Houston Texas 77040
713 344 1752 Office
www.fsdesignbuild.com

PROJECT NAME

INFORMATION TECHNOLGY BUILDING
EUGENE HEIMANN CIRCLE
FORT BEND COUNTY . TEXAS

CONSULTANTS

Infrastructure Associates
INFRASTRUCTURE ASSOCIATES, INC.
6117 RICHMOND AVENUE, SUITE 200
HOUSTON, TEXAS 77057–6267
(713) 622–0120 PH (713) 622–0557 FAX
TBPE FIRM REGISTRATION #F–4506
WWW.IAHOUSTON.COM

PROFESSIONAL SEAL

STATE OF TEXAS
SEVAK KALANTARIANS
97498
LICENSED
PROFESSIONAL ENGINEER
2024-05-15

ISSUED FOR
ISSUED FOR PROPOSALS AND PERMIT

REVISIONS

No.	DESCRIPTION	DATE

KEY PLAN

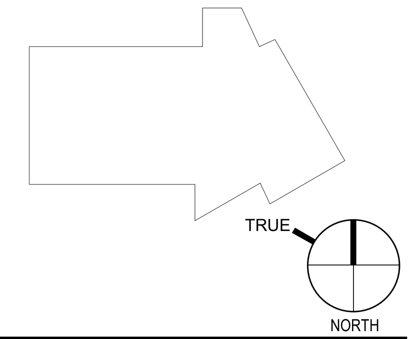

SHEET TITLE
FLOOR PLAN LEVEL 2 - POWER

SCALE 1/8" = 1'-0"
DATE 05/15/2024
PROJECT NUMBER 2319
SHEET NUMBER
E202

ELECTRICAL GENERAL NOTES:

1. PROVIDE BACK BOXES AND CONDUITS FOR TELECOM AND SECURITY. COORDINATE WITH TELECOM AND SECURITY DRAWINGS FOR LOCATIONS AND REQUIREMENTS.

KEYED NOTE LEGEND	
1	PROVIDE AND INSTALL (2) J–BOXES MOUNTED FLUSH WITH THE FINISHED WALL, (1) FOR POWER AND (1) FOR DATA TO THE ELECTRICAL FURNITURE SYSTEM. CONNECT FURNITURE THROUGH FURNITURE WHIP TO J–BOX FOR CIRCUITING INDICATED. ROUTE (1)3/4"C FOR POWER AND (1)1–1/2"C FOR DATA UP TO ACCESSIBLE CEILING SPACE. COORDINATE WITH ARCHITECT AND POWERED FURNITURE VENDOR FOR EXACT LOCATIONS TO ROUGH–IN OF POWER AND DATA PRIOR TO BEGINNING WORK.
2	PROVIDE AND INSTALL FURNITURE FEED FIRE–RATED POKE–THROUGH AND PROVIDE FINAL CONNECTION TO THE ELECTRICAL FURNITURE SYSTEM. CONNECT FURNITURE THROUGH FURNITURE WHIP TO POKE–THROUGH FOR CIRCUITING INDICATED. PROVIDE (1)3/4"C FOR POWER AND (1)1–1/2"C FOR DATA. COORDINATE WITH ARCHITECT AND POWERED FURNITURE VENDOR FOR EXACT LOCATIONS TO ROUGH–IN OF POWER AND DATA PRIOR TO BEGINNING WORK.

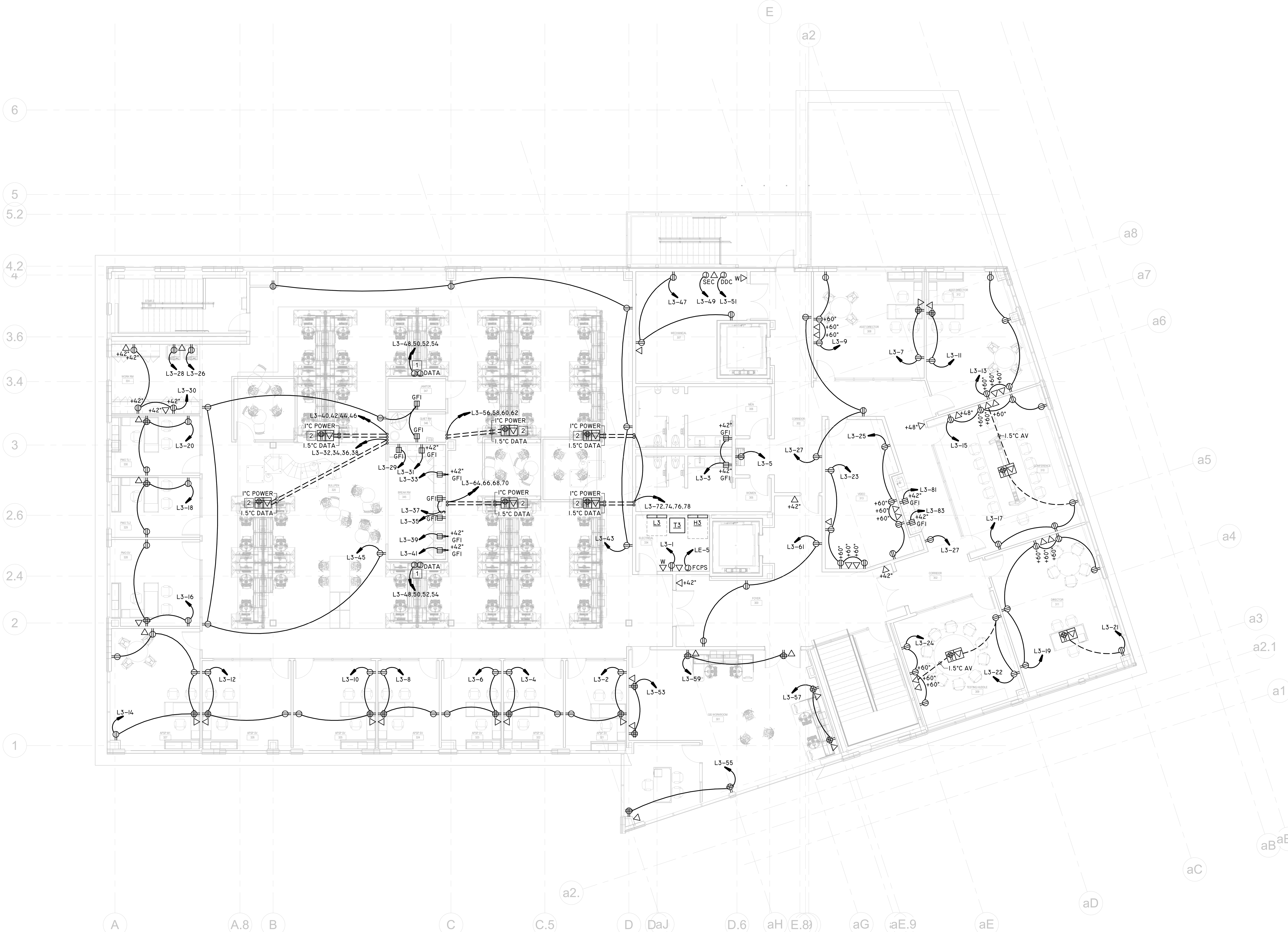

1 E203 LEVEL 3 - FLOOR PLAN - POWER

SCALE : 1/8" = 1'-0"

FSGROUP ARCHITECTS
13105 Northwest Fwy Suite 1110
Houston Texas 77040
713 344 1752 Office
www.fsdesignbuild.com

PROJECT NAME

INFORMATION TECHNOLGY BUILDING
EUGENE HEIMANN CIRCLE
FORT BEND COUNTY , TEXAS

CONSULTANTS

Infrastructure Associates
INFRASTRUCTURE ASSOCIATES, INC.
6117 RICHMOND AVENUE, SUITE 200
HOUSTON, TEXAS 77057-6267
(713) 622-0120 PH (713) 622-0557 FAX
TBPE FIRM REGISTRATION #F-4506
WWW.IAHOUSTON.COM

PROFESSIONAL SEAL

STATE OF TEXAS
SEVAK KALANTARIANS
97498
LICENSED
PROFESSIONAL ENGINEER
2024-05-15

ISSUED FOR

ISSUED FOR PROPOSALS AND PERMIT

REVISIONS

No.	DESCRIPTION	DATE

KEY PLAN

TRUE NORTH

SHEET TITLE

FLOOR PLAN LEVEL 3 - POWER

SCALE 1/8" = 1'-0"

DATE 05/15/2024

PROJECT NUMBER 2319

SHEET NUMBER

E203

KEYED NOTE LEGEND

1	PROVIDE POWER FOR ELEVATOR. COORDINATE POWER INPUT LOCATION AND BUSSMAN ELEVATOR POWER MODULE LOCATION WITH ELEVATOR INSTALLER PRIOR TO ROUGH–IN.
2	PROVIDE POWER FOR ELEVATOR CAB LIGHTING. COORDINATE POWER INPUT LOCATION WITH ELEVATOR INSTALLER PRIOR TO ROUGH–IN. PROVIDE LOCAL 30AS/NF/IP/NEMA–I LOCAL DS.
3	PROVIDE POWER FOR ELEVATOR CAB FANS. COORDINATE POWER INPUT LOCATION WITH ELEVATOR INSTALLER PRIOR TO ROUGH–IN. PROVIDE LOCAL 30AS/NF/IP/NEMA–I LOCAL DS.
4	PROVIDE 30AS/30AT/3P BUS PLUG AT 'BUS–A' AND POWER FEED CORD DROP TO NEMA L2I–30R OUTLET MOUNTED TO CABLE TRAY ABOVE RACK. PROVIDE 4#10 (A/B/C+N), I#10 (G) IN 3/4"C POWER FEED FROM BUS PLUG TO RECEPTACLE. PROVIDE UNISTRUT SUPPORTS AND MOUNTING HARDWARE AS REQUIRED. COORDINATE INSTALLATION WITH TELECOM CONTRACTOR PRIOR TO ROUGH–IN.
5	PROVIDE 30AS/30AT/3P BUS PLUG AT 'BUS–B' AND POWER FEED CORD DROP TO NEMA L2I–30R OUTLET MOUNTED TO CABLE TRAY ABOVE RACK. PROVIDE 4#10 (A/B/C+N), I#10 (G) IN 3/4"C POWER FEED FROM BUS PLUG TO RECEPTACLE. PROVIDE UNISTRUT SUPPORTS AND MOUNTING HARDWARE AS REQUIRED. COORDINATE INSTALLATION WITH TELECOM CONTRACTOR PRIOR TO ROUGH–IN.
6	PROVIDE 30AS/30AT/IP BUS PLUG AT 'BUS–B' AND POWER FEED CORD DROP TO NEMA L5–30R OUTLET MOUNTED TO CABLE TRAY ABOVE RACK. PROVIDE 2#10, I#10 (G) IN 3/4"C POWER FEED FROM BUS PLUG TO RECEPTACLE (ALTERNATE PHASES ON BUS TAP TO EVENLY DISTRIBUTE LOAD). PROVIDE UNISTRUT SUPPORTS AND MOUNTING HARDWARE AS REQUIRED. COORDINATE INSTALLATION WITH TELECOM CONTRACTOR PRIOR TO ROUGH–IN.
7	PROVIDE 30AS/30AT/IP BUS PLUG AT 'BUS–A' AND POWER FEED CORD DROP TO NEMA L5–30R OUTLET MOUNTED TO CABLE TRAY ABOVE RACK. PROVIDE 2#10, I#10 (G) IN 3/4"C POWER FEED FROM BUS PLUG TO RECEPTACLE (ALTERNATE PHASES ON BUS TAP TO EVENLY DISTRIBUTE LOAD). PROVIDE UNISTRUT SUPPORTS AND MOUNTING HARDWARE AS REQUIRED. COORDINATE INSTALLATION WITH TELECOM CONTRACTOR PRIOR TO ROUGH–IN.
8	PROVIDE 30AS/20AT/IP BUS PLUG AND POWER FEED TO GENERAL PURPOSE 5–20R OUTLETS IN THIS ROOM. PROVIDE 2#12, I#12 (G) IN 3/4"C POWER FEED TO RECEPTACLES (ALTERNATE PHASES ON BUS TAP TO EVENLY DISTRIBUTE LOAD).
9	PROVIDE 30AS/20AT/IP BUS PLUG AND POWER FEED TO VISUAL/AUDIO ALARM AND CONTROL PANEL FOR FM200 TANK. PROVIDE 2#12, I#12 (G) IN 3/4"C POWER FEED TO RECEPTACLES (ALTERNATE PHASES ON BUS TAP TO EVENLY DISTRIBUTE LOAD). COORDINATE FINAL EQUIPMENT LOCATIONS WITH FM200 TANK SYSTEM INSTALLER PRIOR TO ROUGH–IN.

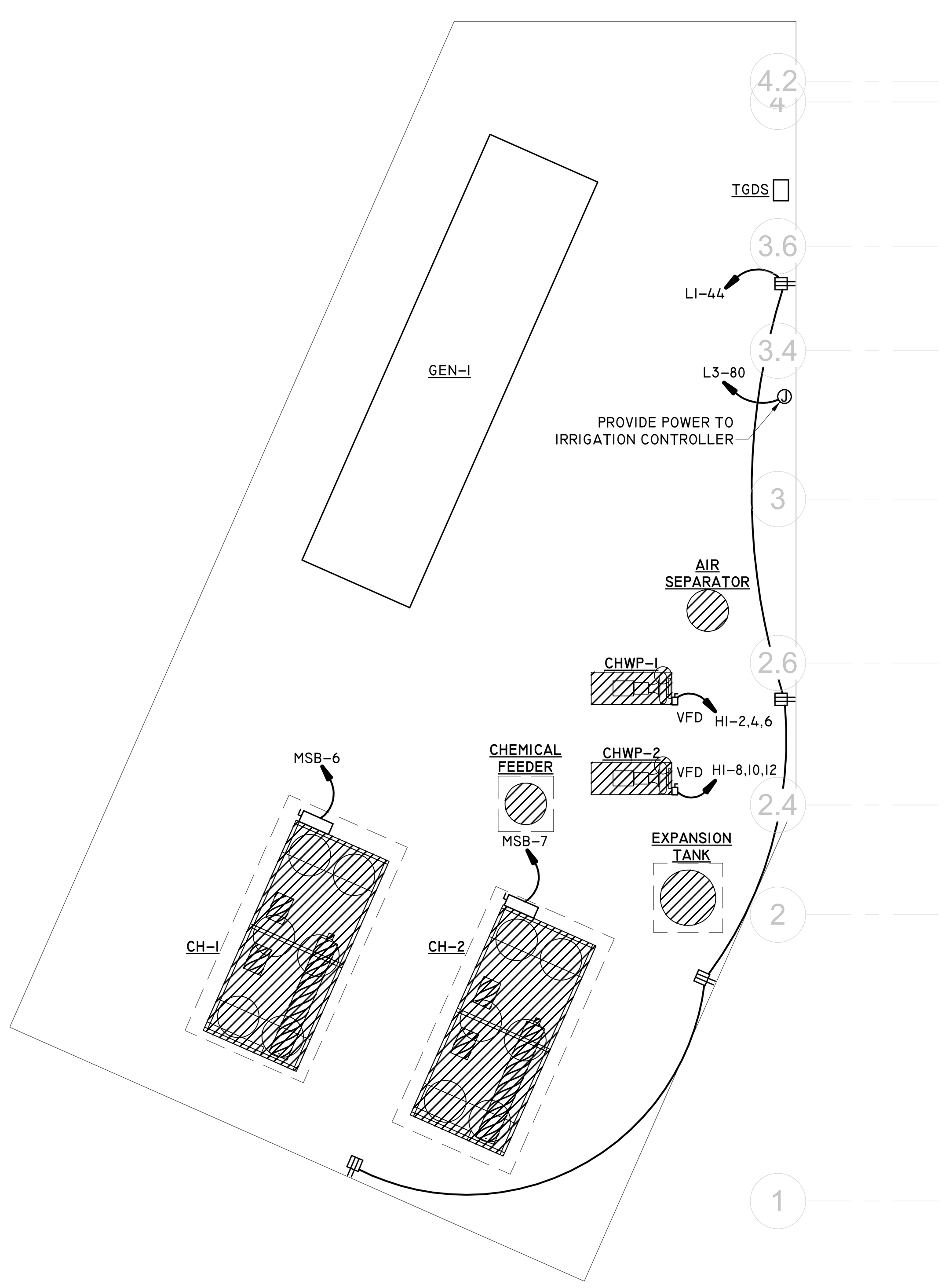

4 E204 MECH YARD - EQUIPMENT
SCALE : 1/8" = 1'-0"

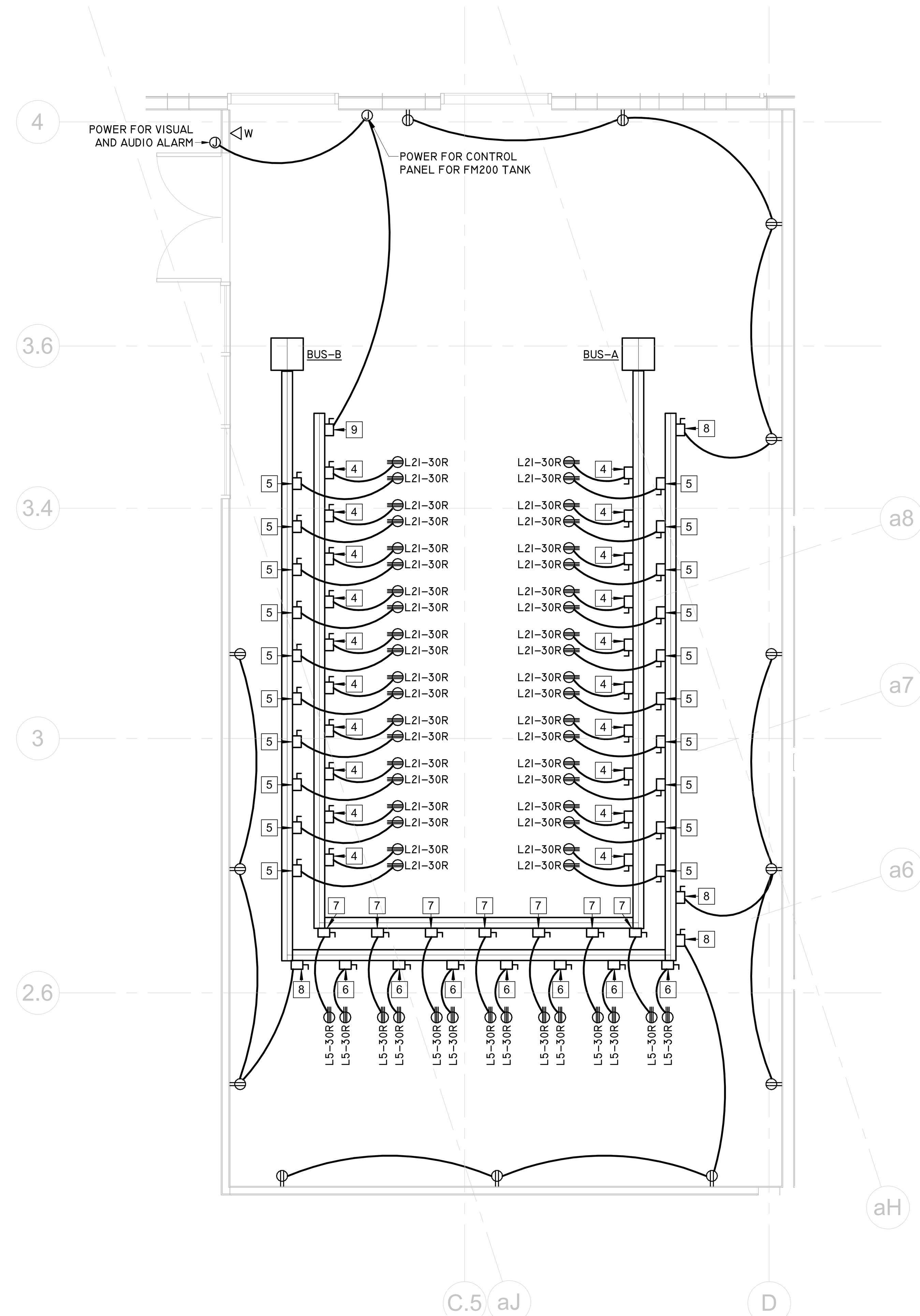

3 E204 ENLARGED FLOOR PLAN - DATA CENTER - POWER
SCALE : 1/4" = 1'-0"

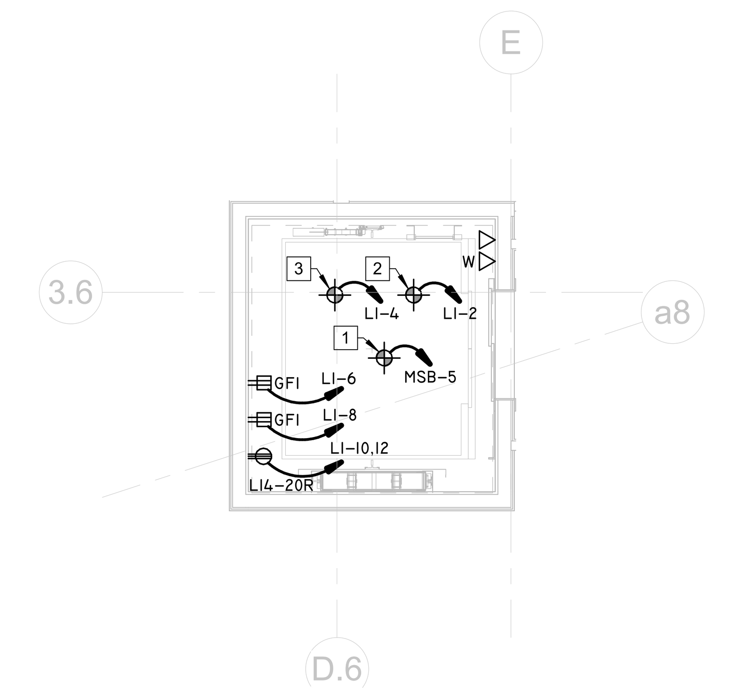

2 E204 ENLARGED FLOOR PLAN - ELEVATOR #2 - POWER
SCALE : 1/4" = 1'-0"

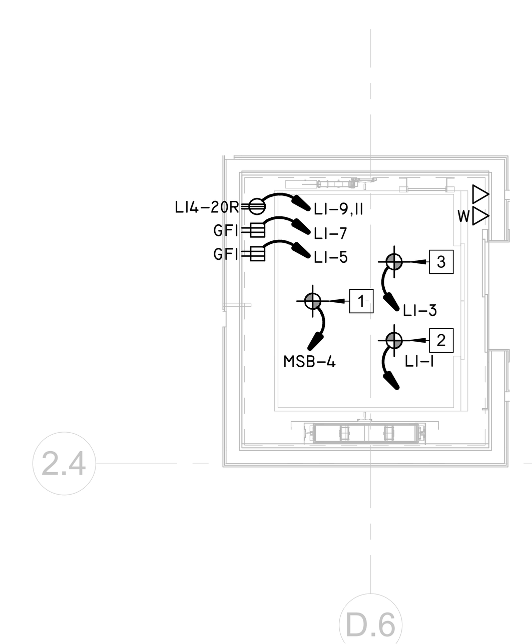

1 E204 ENLARGED FLOOR PLAN - ELEVATOR #1 - POWER
SCALE : 1/4" = 1'-0"

FSGROUP®
ARCHITECTS
13105 Northwest Fwy Suite 1110
Houston Texas 77040
713 344 1752 Office
www.fsdesignbuild.com

PROJECT NAME

INFORMATION TECHNOLGY BUILDING
EUGENE HEIMANN CIRCLE
FORT BEND COUNTY . TEXAS

CONSULTANTS
Infrastructure Associates
INFRASTRUCTURE ASSOCIATES, INC.
6117 RICHMOND AVENUE, SUITE 200
HOUSTON, TEXAS 77057–6267
(713) 622–0120 PH (713) 622–0557 FAX
TBPE FIRM REGISTRATION #F–4506
WWW.IAHOUSTON.COM

PROFESSIONAL SEAL

STATE OF TEXAS
SEVAK KALANTARIANS
97498
LICENSED
PROFESSIONAL ENGINEER
2024-05-15

ISSUED FOR
ISSUED FOR PROPOSALS AND PERMIT

REVISIONS

No.	DESCRIPTION	DATE

KEY PLAN

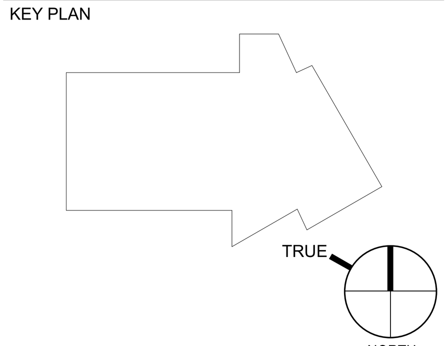

SHEET TITLE
ENLARGED FLOOR PLANS - POWER

SCALE	As indicated
DATE	05/15/2024
PROJECT NUMBER	2319
SHEET NUMBER	E204

KEYED NOTE LEGEND	
1	INDOOR UNIT FED BY VFCI CABLE FROM OUTDOOR UNIT, PROVIDE 1" IMC FROM ASSOCIATED CONDENSING UNIT OUTSIDE TO THIS LOCATION WITH PULLSTRING FOR CABLE.

1
E211

LEVEL 1 - FLOOR PLAN - EQUIPMENT

SCALE : 1/8" = 1'-0"

FSGROUP®
ARCHITECTS
13105 Northwest Fwy Suite 1110
Houston Texas 77040
713 344 1752 Office
www.fsdesignbuild.com

PROJECT NAME

THE STATE OF TEXAS FORT BEND COUNTY

INFORMATION TECHNOLGY BUILDING
EUGENE HEIMANN CIRCLE
FORT BEND COUNTY . TEXAS

CONSULTANTS

Infrastructure Associates
INFRASTRUCTURE ASSOCIATES, INC.
6117 RICHMOND AVENUE, SUITE 200
HOUSTON, TEXAS 77057-6267
(713) 622-0120 PH (713) 622-0557 FAX
TBPE FIRM REGISTRATION #F-4506
WWW.IAHOUSTON.COM

PROFESSIONAL SEAL

STATE OF TEXAS
SEVAK KALANTARIANS
97498
LICENSED
PROFESSIONAL ENGINEER
2024-05-15

ISSUED FOR

ISSUED FOR PROPOSALS AND PERMIT

REVISIONS

No.	DESCRIPTION	DATE

KEY PLAN

TRUE
NORTH

SHEET TITLE

FLOOR PLAN LEVEL 1 - EQUIPMENT

SCALE 1/8" = 1'-0"

DATE 05/15/2024

PROJECT NUMBER 2319

SHEET NUMBER

E211

KEYED NOTE LEGEND	
1	INDOOR UNIT FED BY VFCI CABLE FROM OUTDOOR UNIT, PROVIDE 1" IMC FROM ASSOCIATED CONDENSING UNIT OUTSIDE TO THIS LOCATION WITH PULLSTRING FOR CABLE.

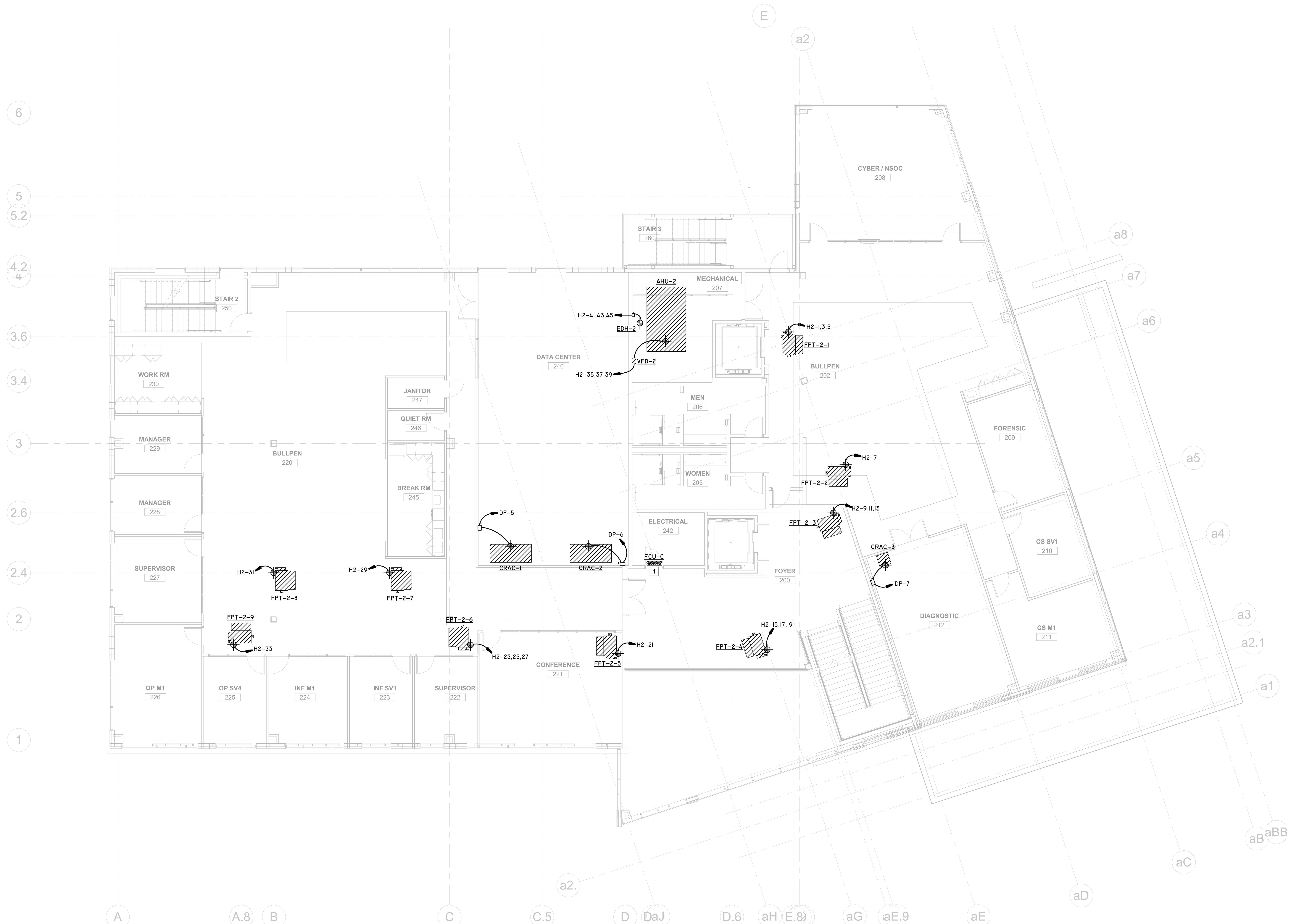

1 E212 LEVEL 2 - FLOOR PLAN - EQUIPMENT
SCALE : 1/8" = 1'-0"

FSGROUP® ARCHITECTS
13105 Northwest Fwy Suite 1110
Houston Texas 77040
713 344 1752 Office
www.fsdesignbuild.com

PROJECT NAME

THE STATE OF TEXAS · FORT BEND COUNTY

INFORMATION TECHNOLGY BUILDING
EUGENE HEIMANN CIRCLE
FORT BEND COUNTY . TEXAS

CONSULTANTS

Infrastructure Associates
INFRASTRUCTURE ASSOCIATES, INC.
6117 RICHMOND AVENUE, SUITE 200
HOUSTON, TEXAS 77057-6267
(713) 622-0120 PH (713) 622-0557 FAX
TBPE FIRM REGISTRATION #F-4506
WWW.IAHOUSTON.COM

PROFESSIONAL SEAL

STATE OF TEXAS
SEVAK KALANTARIANS
97498
LICENSED
PROFESSIONAL ENGINEER
2024-05-15

ISSUED FOR
ISSUED FOR PROPOSALS AND PERMIT

REVISIONS

No.	DESCRIPTION	DATE

KEY PLAN

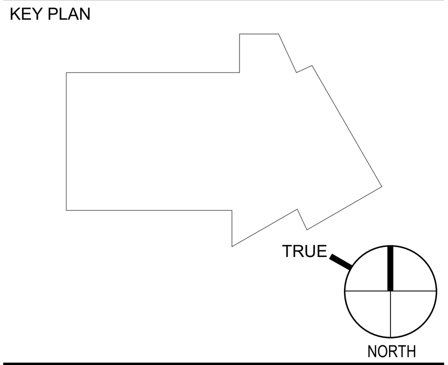

SHEET TITLE
FLOOR PLAN LEVEL 2 - EQUIPMENT

SCALE 1/8" = 1'-0"
DATE 05/15/2024
PROJECT NUMBER 2319
SHEET NUMBER
E212

KEYED NOTE LEGEND

1	INDOOR UNIT FED BY VFCI CABLE FROM OUTDOOR UNIT, PROVIDE 1" IMC FROM ASSOCIATED CONDENSING UNIT OUTSIDE TO THIS LOCATION WITH PULLSTRING FOR CABLE.

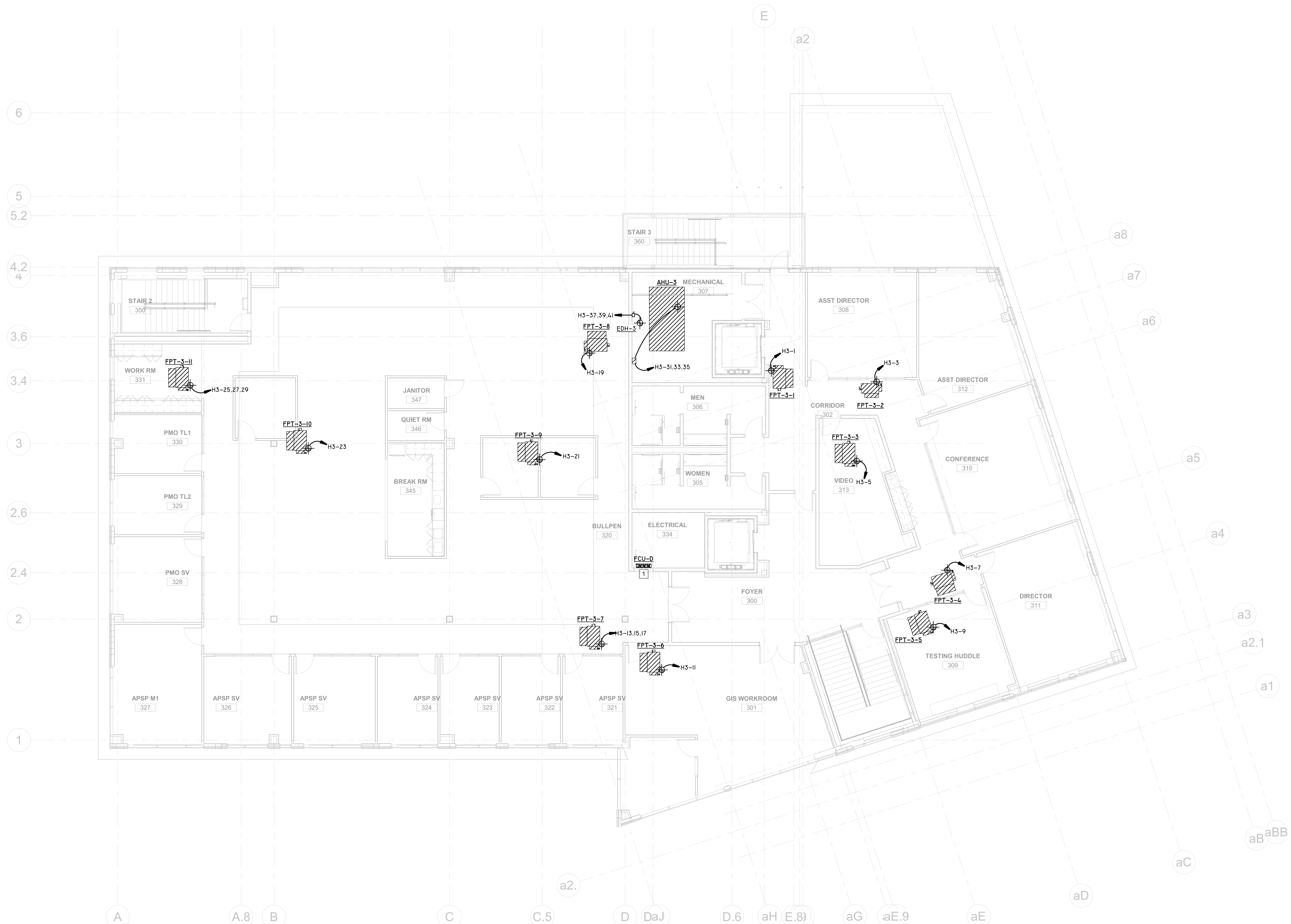

1
E213
LEVEL 3 - FLOOR PLAN - EQUIPMENT
SCALE : 1/8" = 1'-0"

FSGROUP® ARCHITECTS
13105 Northwest Fwy Suite 1110
Houston Texas 77040
713 344 1752 Office
www.fsdesignbuild.com

PROJECT NAME

INFORMATION TECHNOLGY BUILDING
EUGENE HEIMANN CIRCLE
FORT BEND COUNTY . TEXAS

CONSULTANTS

Infrastructure Associates
INFRASTRUCTURE ASSOCIATES, INC.
6117 RICHMOND AVENUE, SUITE 200
HOUSTON, TEXAS 77057-6267
(713) 622-0120 PH (713) 622-0557 FAX
TBPE FIRM REGISTRATION #F-4506
WWW.IAHOUSTON.COM

PROFESSIONAL SEAL

STATE OF TEXAS
SEVAK KALANTARIANS
97498
LICENSED
PROFESSIONAL ENGINEER
2024-05-15

ISSUED FOR
ISSUED FOR PROPOSALS AND PERMIT

REVISIONS

No.	DESCRIPTION	DATE

KEY PLAN

TRUE NORTH

SHEET TITLE
FLOOR PLAN LEVEL 3 - EQUIPMENT

SCALE 1/8" = 1'-0"
DATE 05/15/2024
PROJECT NUMBER 2319
SHEET NUMBER
E213

ELECTRICAL GENERAL NOTES:

1. CONNECT ALL EXIT SIGN FIXTURES (TYPE 'X') ON LEVEL 1 TO EMERGENCY LIFE SAFETY CIRCUIT HE-1. REFER TO PANEL SCHEDULE.
2. CONNECT ALL LIGHT FIXTURES APPENDED WITH 'E' (EMERGENCY) ON THIS SHEET TO LIFE SAFETY PANEL 'E' VIA GTD (GENERATOR TRANSFER DEVICE) FOR INSTANTANEOUS ILLUMINATION TO FULL OUTPUT REGARDLESS OF SWITCH POSITION. EVENLY DISTRIBUTE LOAD ON CIRCUITS HE-2, HE-4, & HE-6 (REFER TO PANEL SCHEDULES).

KEYED NOTE LEGEND	
1	COORDINATE LIGHT FIXTURE LOCATION AND INSTALLATION WITHIN ELEVATOR PIT WITH ELEVATOR VENDOR PRIOR TO ROUGH-IN.

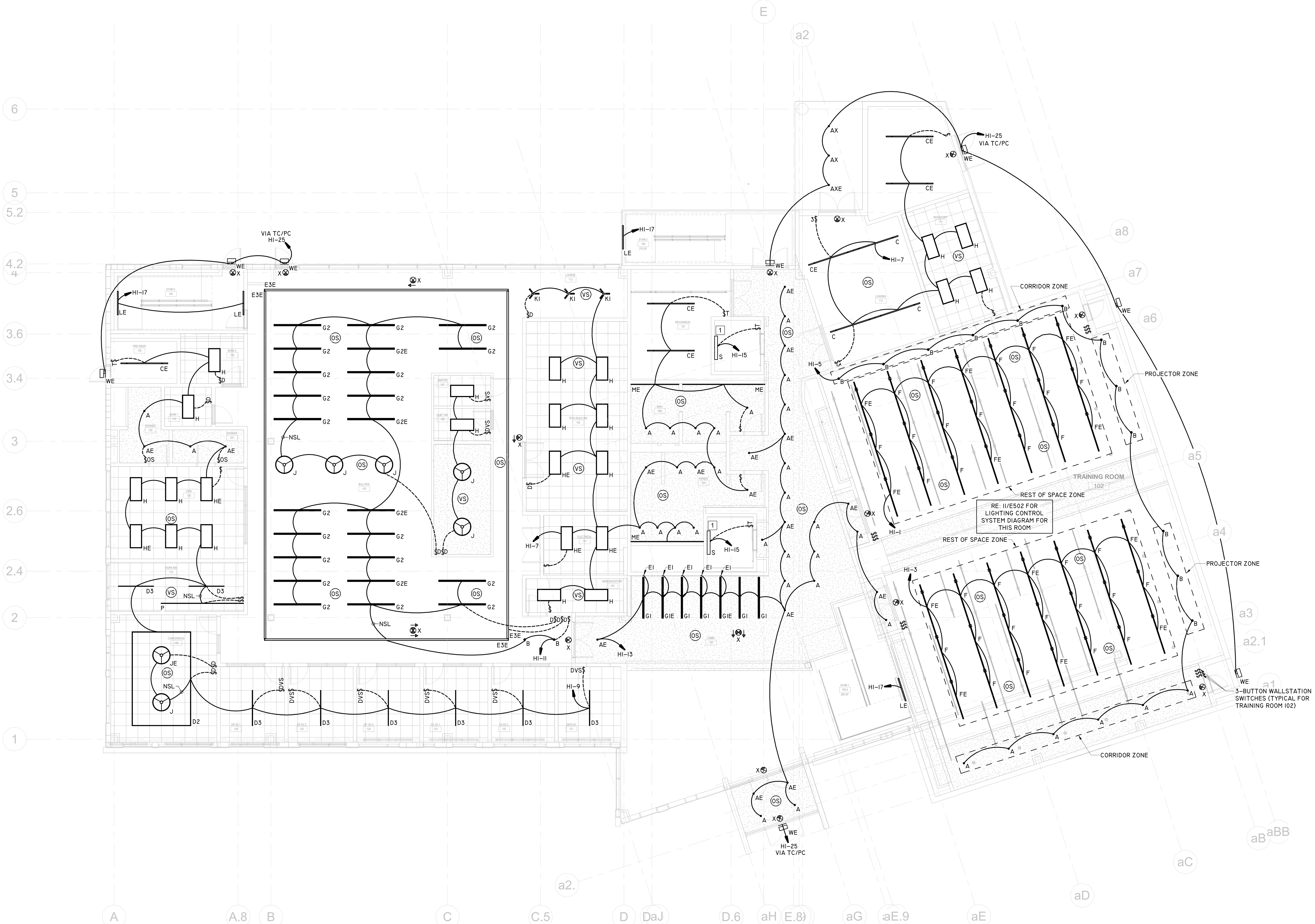

1 E301 LEVEL 1 - FLOOR PLAN - LIGHTING
SCALE : 1/8" = 1'-0"

FSGROUP ARCHITECTS
13105 Northwest Fwy Suite 1110
Houston Texas 77040
713 344 1752 Office
www.fsdesignbuild.com

PROJECT NAME

INFORMATION TECHNOLGY BUILDING
EUGENE HEIMANN CIRCLE
FORT BEND COUNTY . TEXAS

CONSULTANTS

Infrastructure Associates
INFRASTRUCTURE ASSOCIATES, INC.
6117 RICHMOND AVENUE, SUITE 200
HOUSTON, TEXAS 77057-6267
(713) 622-0120 PH (713) 622-0557 FAX
TBPE FIRM REGISTRATION #F-4506
WWW.IAHOUSTON.COM

PROFESSIONAL SEAL
STATE OF TEXAS
SEVAK KALANTARIANS
97498
LICENSED PROFESSIONAL ENGINEER
2024-05-15

ISSUED FOR
ISSUED FOR PROPOSALS AND PERMIT

REVISIONS

No.	DESCRIPTION	DATE

KEY PLAN
TRUE NORTH

SHEET TITLE
FLOOR PLAN LEVEL 1 - LIGHTING

SCALE 1/8" = 1'-0"
DATE 05/15/2024
PROJECT NUMBER 2319
SHEET NUMBER
E301

ELECTRICAL GENERAL NOTES:

1. CONNECT ALL EXIT SIGN FIXTURES (TYPE 'X') ON LEVEL 2 TO EMERGENCY LIFE SAFETY CIRCUIT HE-3. REFER TO PANEL SCHEDULE.
2. CONNECT ALL LIGHT FIXTURES APPENDED WITH 'E' (EMERGENCY) ON THIS SHEET TO LIFE SAFETY PANEL 'E' VIA GTD (GENERATOR TRANSFER DEVICE) FOR INSTANTANEOUS ILLUMINATION TO FULL OUTPUT REGARDLESS OF SWITCH POSITION. EVENLY DISTRIBUTE LOAD ON CIRCUITS HE-8, HE-10, & HE-12 (REFER TO PANEL SCHEDULES).

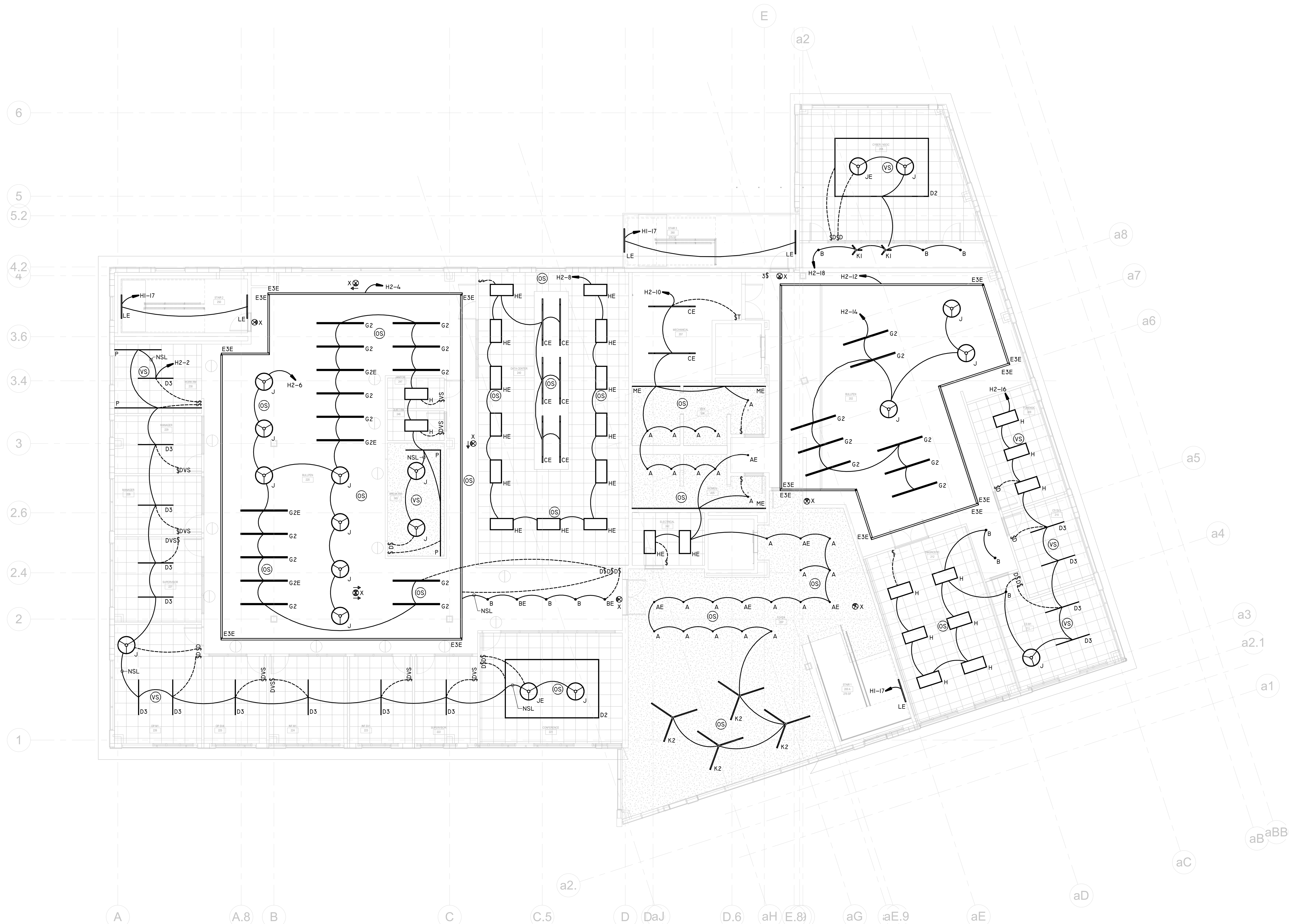

1
E302
LEVEL 2 - FLOOR PLAN - LIGHTING
SCALE : 1/8" = 1'-0"

FSGROUP®
ARCHITECTS
13105 Northwest Fwy Suite 1110
Houston Texas 77040
713 344 1752 Office
www.fsdesignbuild.com

PROJECT NAME

THE STATE OF TEXAS
FORT BEND COUNTY

INFORMATION TECHNOLGY BUILDING
EUGENE HEIMANN CIRCLE
FORT BEND COUNTY . TEXAS

CONSULTANTS

Infrastructure Associates
INFRASTRUCTURE ASSOCIATES, INC.
6117 RICHMOND AVENUE, SUITE 200
HOUSTON, TEXAS 77057-6267
(713) 622-0120 PH (713) 622-0557 FAX
TBPE FIRM REGISTRATION #F-4506
WWW.IAHOUSTON.COM

PROFESSIONAL SEAL

STATE OF TEXAS
SEVAK KALANTARIANS
97498
LICENSED
PROFESSIONAL ENGINEER
2024-05-15

ISSUED FOR

ISSUED FOR PROPOSALS AND PERMIT

REVISIONS

No.	DESCRIPTION	DATE

KEY PLAN

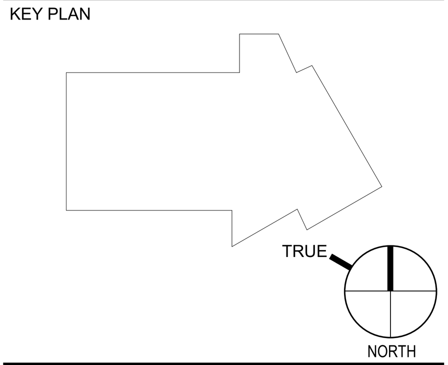

SHEET TITLE

FLOOR PLAN LEVEL 2 - LIGHTING

SCALE	1/8" = 1'-0"
DATE	05/15/2024
PROJECT NUMBER	2319

SHEET NUMBER

E302

ELECTRICAL GENERAL NOTES:

1. CONNECT ALL EXIT SIGN FIXTURES (TYPE 'X') ON LEVEL 3 TO EMERGENCY LIFE SAFETY CIRCUIT HE-5. REFER TO PANEL SCHEDULE.
2. CONNECT ALL LIGHT FIXTURES APPENDED WITH 'E' (EMERGENCY) ON THIS SHEET TO LIFE SAFETY PANEL 'E' VIA GTD (GENERATOR TRANSFER DEVICE) FOR INSTANTANEOUS ILLUMINATION TO FULL OUTPUT REGARDLESS OF SWITCH POSITION. EVENLY DISTRIBUTE LOAD ON CIRCUITS HE-14, HE-16, & HE-18 (REFER TO PANEL SCHEDULES).

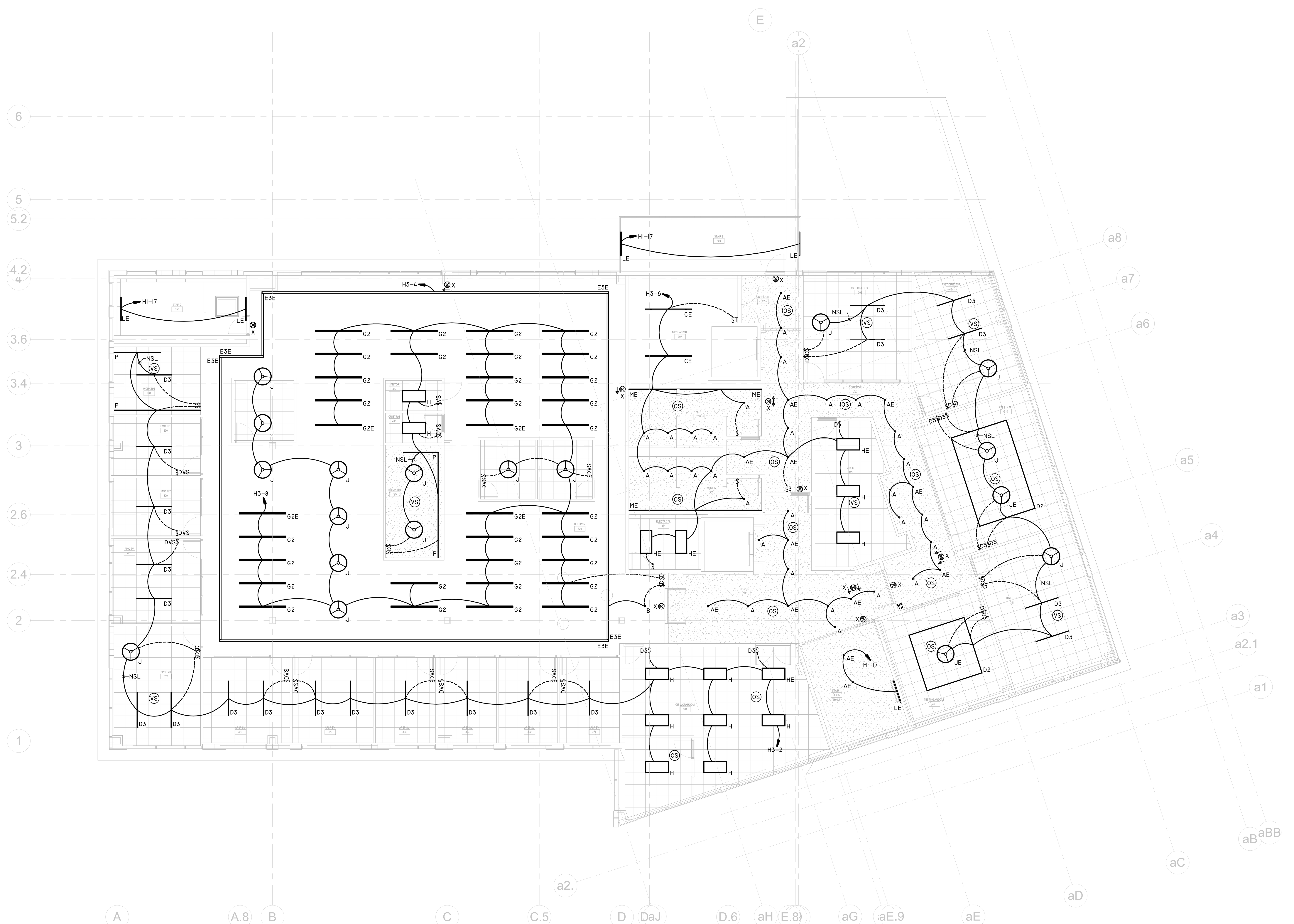

1
E303
LEVEL 3 - FLOOR PLAN - LIGHTING
SCALE : 1/8" = 1'-0"

FSGROUP®
ARCHITECTS
13105 Northwest Fwy Suite 1110
Houston Texas 77040
713 344 1752 Office
www.fsdesignbuild.com

PROJECT NAME

INFORMATION TECHNOLGY BUILDING
EUGENE HEIMANN CIRCLE
FORT BEND COUNTY . TEXAS

CONSULTANTS

Infrastructure Associates
INFRASTRUCTURE ASSOCIATES, INC.
6117 RICHMOND AVENUE, SUITE 200
HOUSTON, TEXAS 77057-6267
(713) 622-0120 PH (713) 622-0557 FAX
TBPE FIRM REGISTRATION #F-4506
WWW.IAHOUSTON.COM

PROFESSIONAL SEAL

2024-05-15

ISSUED FOR
ISSUED FOR PROPOSALS AND PERMIT

REVISIONS

No.	DESCRIPTION	DATE

KEY PLAN

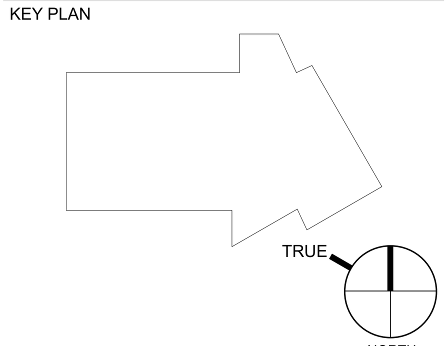

SHEET TITLE
FLOOR PLAN LEVEL 3 - LIGHTING

SCALE: 1/8" = 1'-0"
DATE: 05/15/2024
PROJECT NUMBER: 2319
SHEET NUMBER
E303

ELECTRICAL GENERAL NOTES:

1. PROVIDE DUCT SMOKE DETECTOR AND FIRE ALARM SHUTDOWN RELAY WITH INTERCONNECTION TO FACP AT ALL AIR HANDLING UNITS. COORDINATE WITH MECHANICAL CONTRACTOR AND UNIT MANUFACTURER FOR INSTALLATION AND INTERCONNECTION OF FIRE ALARM DEVICES AT AIR HANDLING UNITS.

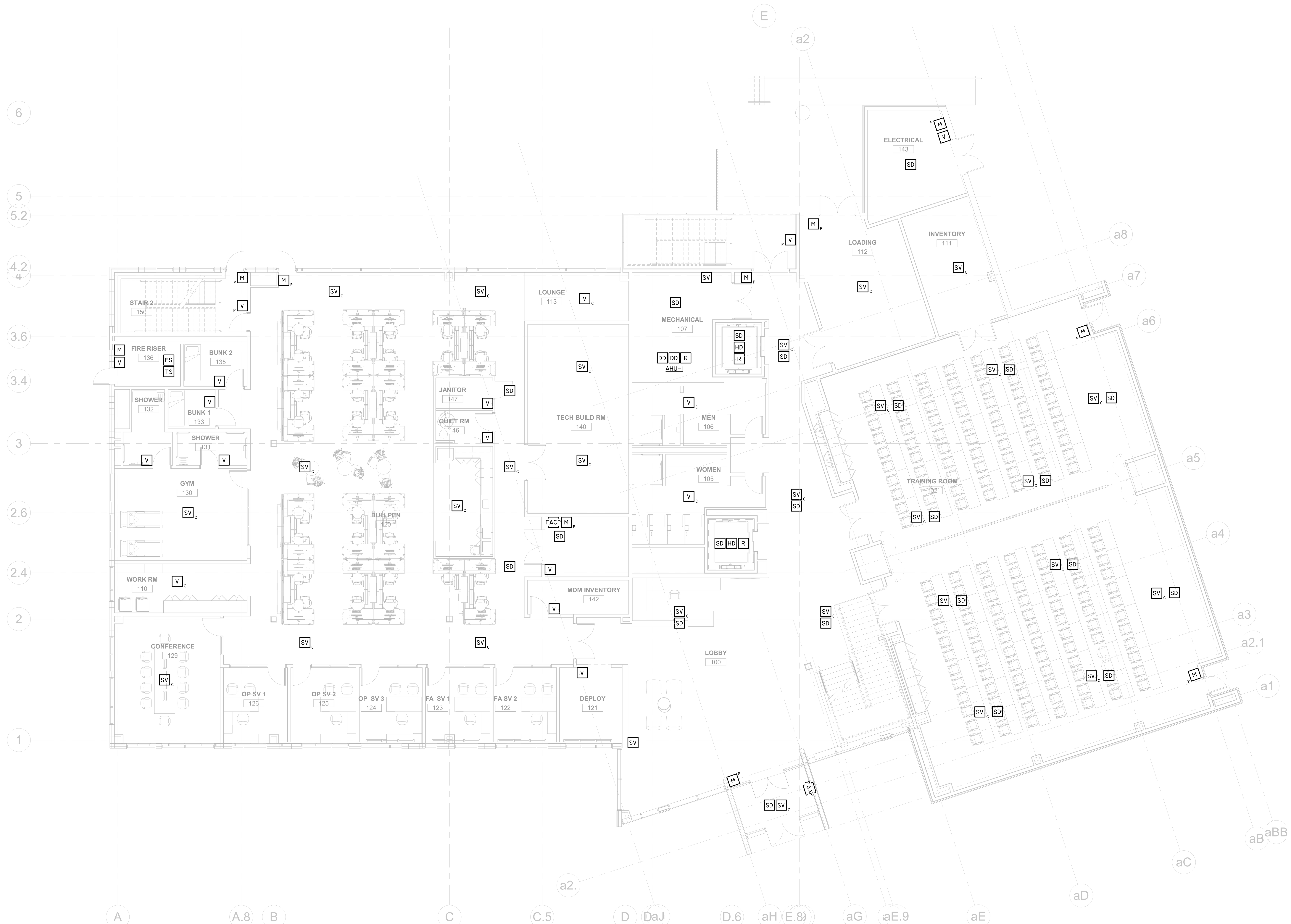

1
E401
LEVEL 1 - FLOOR PLAN - FIRE ALARM
SCALE : 1/8" = 1'-0"

FSGROUP®
ARCHITECTS
13105 Northwest Fwy Suite 1110
Houston Texas 77040
713 344 1752 Office
www.fsdesignbuild.com

PROJECT NAME

INFORMATION TECHNOLGY BUILDING
EUGENE HEIMANN CIRCLE
FORT BEND COUNTY . TEXAS

CONSULTANTS

Infrastructure Associates
INFRASTRUCTURE ASSOCIATES, INC.
6117 RICHMOND AVENUE, SUITE 200
HOUSTON, TEXAS 77057-6267
(713) 622-0120 PH (713) 622-0557 FAX
TBPE FIRM REGISTRATION #F-4506
WWW.IAHOUSTON.COM

PROFESSIONAL SEAL

2024-05-15

ISSUED FOR

ISSUED FOR PROPOSALS AND PERMIT

REVISIONS

No.	DESCRIPTION	DATE

KEY PLAN

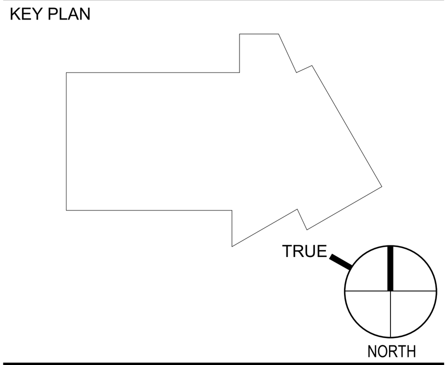

SHEET TITLE

FLOOR PLAN LEVEL 1 - FIRE ALARM

SCALE 1/8" = 1'-0"

DATE 05/15/2024

PROJECT NUMBER 2319

SHEET NUMBER

E401

ELECTRICAL GENERAL NOTES:

1. PROVIDE DUCT SMOKE DETECTOR AND FIRE ALARM SHUTDOWN RELAY WITH INTERCONNECTION TO FACP AT ALL AIR HANDLING UNITS. COORDINATE WITH MECHANICAL CONTRACTOR AND UNIT MANUFACTURER FOR INSTALLATION AND INTERCONNECTION OF FIRE ALARM DEVICES AT AIR HANDLING UNITS.

1 E402 LEVEL 2 - FLOOR PLAN - FIRE ALARM
SCALE : 1/8" = 1'-0"

FSGROUP® ARCHITECTS
13105 Northwest Fwy Suite 1110
Houston Texas 77040
713 344 1752 Office
www.fsdesignbuild.com

PROJECT NAME

THE STATE OF TEXAS · FORT BEND COUNTY

INFORMATION TECHNOLGY BUILDING
EUGENE HEIMANN CIRCLE
FORT BEND COUNTY , TEXAS

CONSULTANTS

Infrastructure Associates
INFRASTRUCTURE ASSOCIATES, INC.
6117 RICHMOND AVENUE, SUITE 200
HOUSTON, TEXAS 77057-6267
(713) 622-0120 PH (713) 622-0557 FAX
TBPE FIRM REGISTRATION #F-4506
WWW.IAHOUSTON.COM

PROFESSIONAL SEAL

STATE OF TEXAS
SEVAK KALANTARIANS
97498
LICENSED
PROFESSIONAL ENGINEER
2024-05-15

ISSUED FOR
ISSUED FOR PROPOSALS AND PERMIT

REVISIONS

No.	DESCRIPTION	DATE

KEY PLAN

TRUE NORTH

SHEET TITLE
FLOOR PLAN LEVEL 2 - FIRE ALARM

SCALE 1/8" = 1'-0"
DATE 05/15/2024
PROJECT NUMBER 2319
SHEET NUMBER
E402

ELECTRICAL GENERAL NOTES:

1. PROVIDE DUCT SMOKE DETECTOR AND FIRE ALARM SHUTDOWN RELAY WITH INTERCONNECTION TO FACP AT ALL AIR HANDLING UNITS. COORDINATE WITH MECHANICAL CONTRACTOR AND UNIT MANUFACTURER FOR INSTALLATION AND INTERCONNECTION OF FIRE ALARM DEVICES AT AIR HANDLING UNITS.

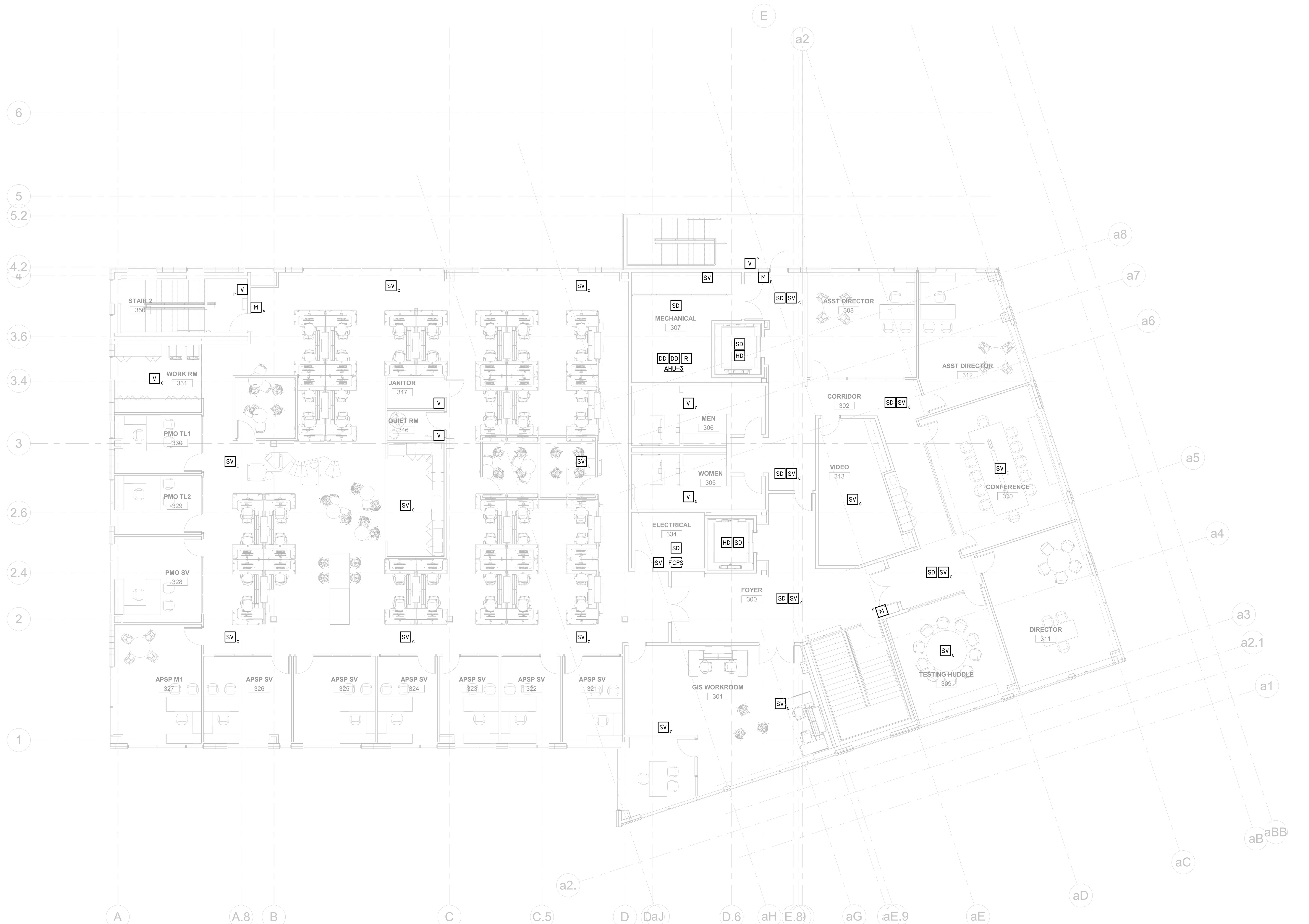

1 E403 LEVEL 3 - FLOOR PLAN - FIRE ALARM
SCALE : 1/8" = 1'-0"

FSGROUP® ARCHITECTS
13105 Northwest Fwy Suite 1110
Houston Texas 77040
713 344 1752 Office
www.fsdesignbuild.com

PROJECT NAME

INFORMATION TECHNOLGY BUILDING
EUGENE HEIMANN CIRCLE
FORT BEND COUNTY , TEXAS

CONSULTANTS

Infrastructure Associates
INFRASTRUCTURE ASSOCIATES, INC.
6117 RICHMOND AVENUE, SUITE 200
HOUSTON, TEXAS 77057-6267
(713) 622-0120 PH (713) 622-0557 FAX
TBPE FIRM REGISTRATION #F-4506
WWW.IAHOUSTON.COM

PROFESSIONAL SEAL

STATE OF TEXAS
SEVAK KALANTARIANS
97498
LICENSED
PROFESSIONAL ENGINEER
2024-05-15

ISSUED FOR

ISSUED FOR PROPOSALS AND PERMIT

REVISIONS

No.	DESCRIPTION	DATE

KEY PLAN

TRUE NORTH

SHEET TITLE

FLOOR PLAN LEVEL 3 - FIRE ALARM

SCALE 1/8" = 1'-0"

DATE 05/15/2024

PROJECT NUMBER 2319

SHEET NUMBER

E403

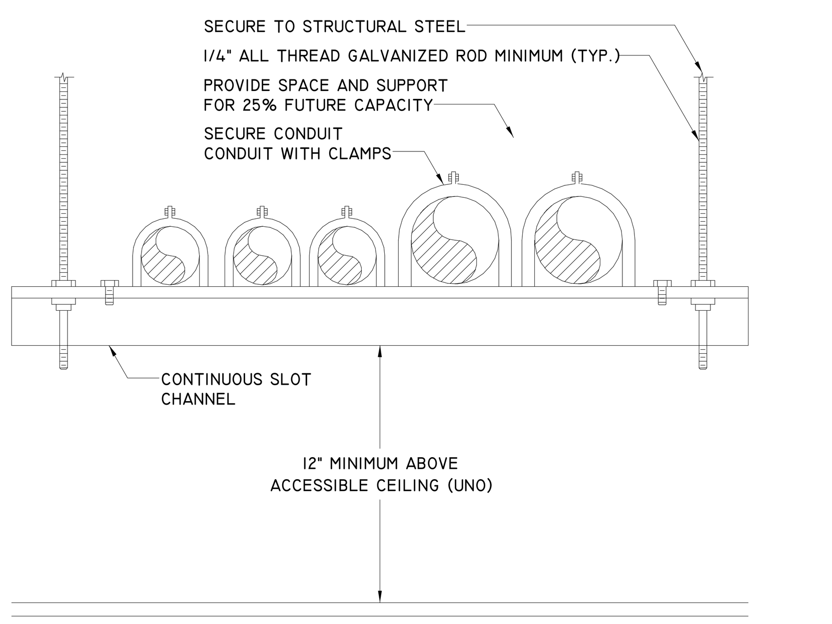

DETAIL - CONDUIT RACK | NOT TO SCALE | 13

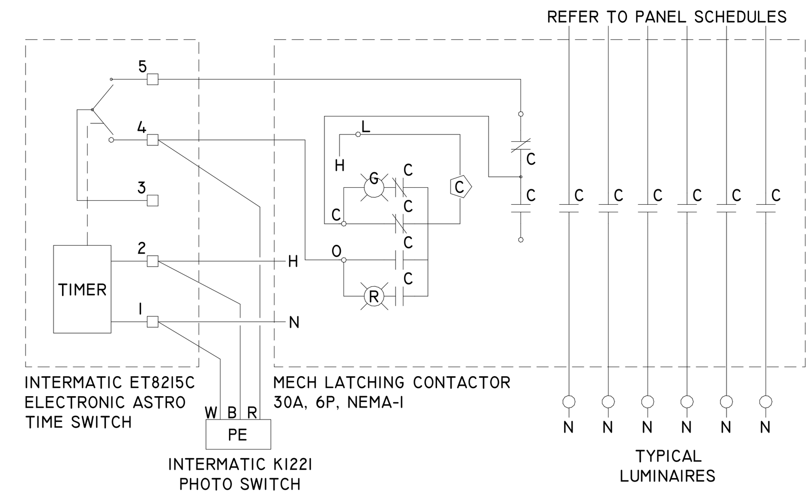

DETAIL - LIGHTING CONTACTOR | NOT TO SCALE | 10

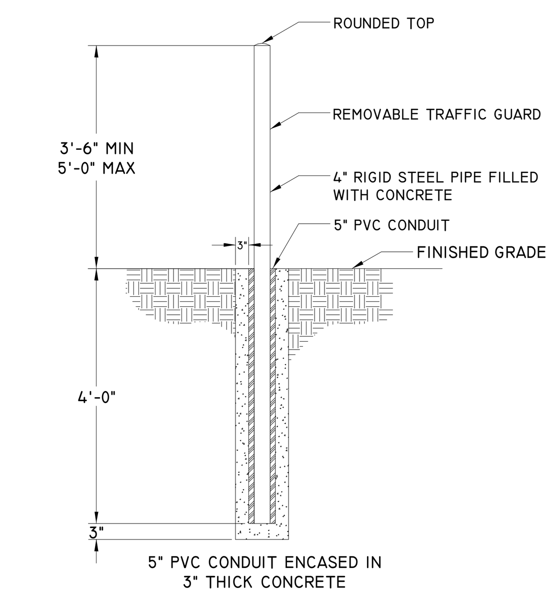

DETAIL - BOLLARD | NOT TO SCALE | 6

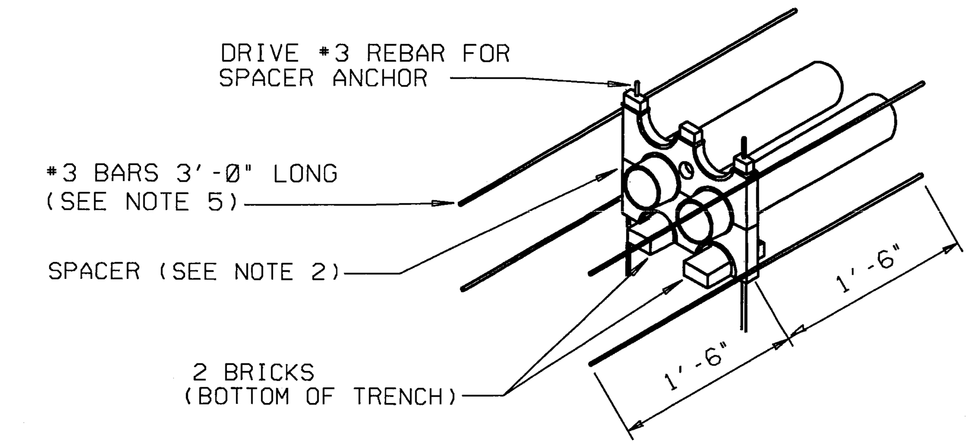

NOTES:

1. CONDUIT TO BE PVC, MINIMUM GRADE TYPE EB
2. SPACES SHOULD BE INSTALLED NOT MORE THAN 10'-0" APART.
3. ALL EXTERIOR CONCRETE COVER DIMENSIONS ARE MINIMUM.
4. CONCRETE SHALL BE IN ACCORDANCE WITH CNP SPECIFICATION 007-221-01, LATEST REVISION.
5. PLACE REINFORCING BARS IN 4 CORNERS OF THE CONCRETE WHERE SPACERS ARE USED.
6. ON COLD JOINT CONCRETE POUR USE #5 REBAR (3'-0" IN LENGTH, EXPOSED 1'-6").
7. LENGHT OF REBAR FOR SPACER ANCHOR WILL VARY PER DUCT BANK HEIGHT.
8. CONDUITS ENDS SHALL BE PLUGGED WITH A DUCT CAP OR OTHER TYPE OF CAPPING DEVICE.
9. A ONE (1') VERTICAL CLEARANCE MUST BE MAINTAINED BETWEEN CNP'S DUCTBANK AND ALL NON-CNP FACILITIES CROSSING THE DUCT BANK.
10. A FIVE FOOT (5') HORIZONTAL CLEARANCE MUST BE MAINTAINED BETWEEN CNP'S DUCT BANK AND ALL NON-CNP FACILITIES CROSSING THE DUCT BANK (JOINT TRENCHING IS NOT PERMITTED).
11. INSTALL JET LINE IN ALL CONDUITS AND A #14 AWG WIRE IN ONE CONDUIT.

DETAIL - PRIMARY DUCT BANK CROSS SECTION | NOT TO SCALE | 4

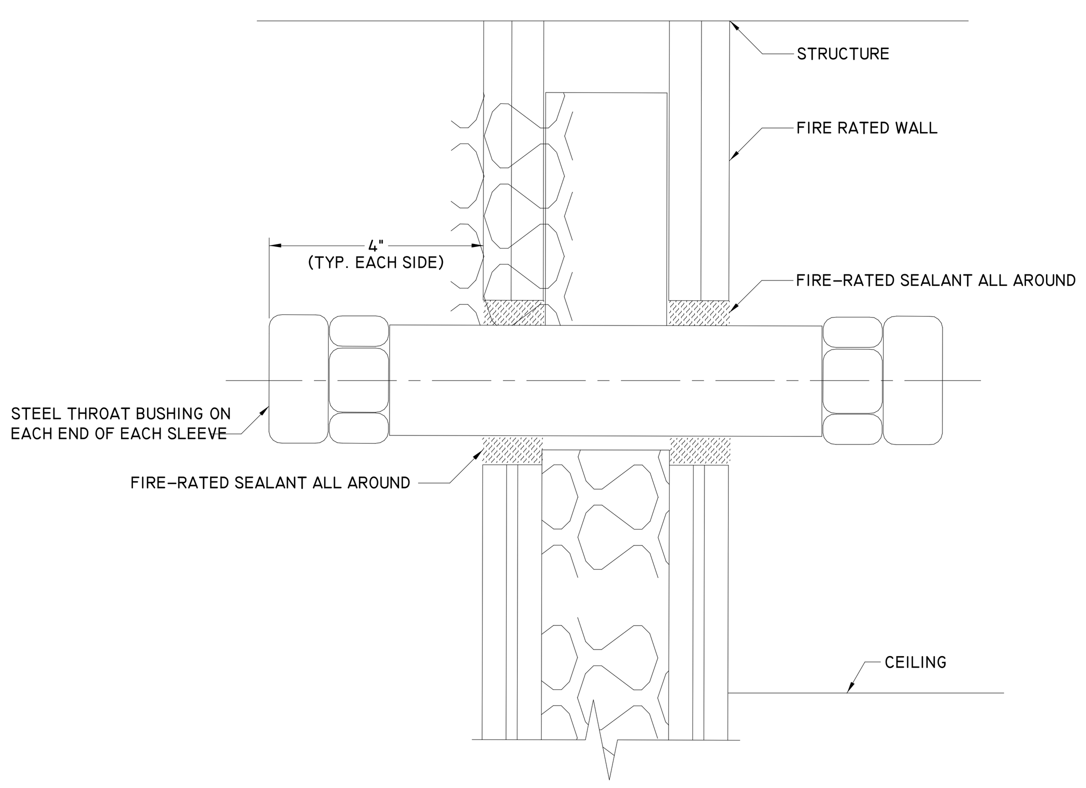

DETAIL - WALL SLEEVE | NOT TO SCALE | 12

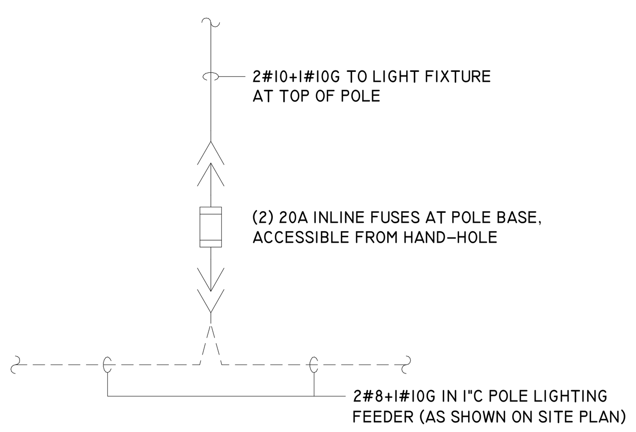

DETAIL - POLE LIGHT WIRING DIAGRAM AT BASE | NOT TO SCALE | 9

VERIFY WITH POWER CURRENT REQUIREMENTS WITH POWER COMPANY PRIOR TO CONSTRUCTION

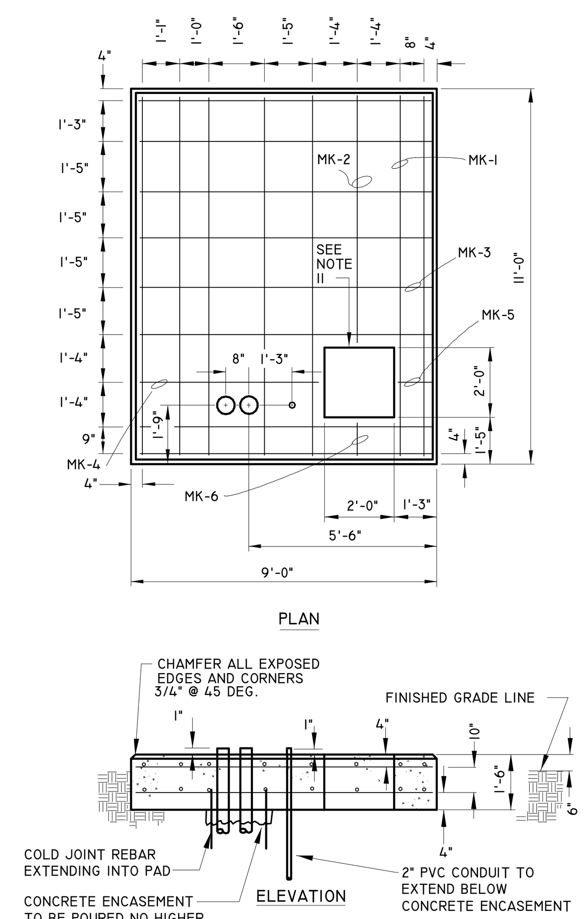

REINFORCING SCHEDULE PER FOUNDATION				
MARK	QTY.	SIZE	LENGTH	REMARKS
MK-1	14	#7	10'-6"	STRAIGHT
MK-2	2	#7	7'-0"	STRAIGHT
MK-3	16	#7	8'-6"	STRAIGHT
MK-4	2	#7	5'-3"	STRAIGHT
MK-5	2	#7	0'-9"	STRAIGHT
MK-6	2	#7	1'-0"	STRAIGHT

MATERIAL ESTIMATE PER FOUNDATION	
DESCRIPTION	QUANTITY
REINFORCING STEEL #7	636 LBS
CONCRETE (5 SACK)	5 CU. YDS.
TYPE EB OR BETTER PVC CONDUIT, 90 DEG, 60" R	2
2" PVC CONDUIT	5 FT

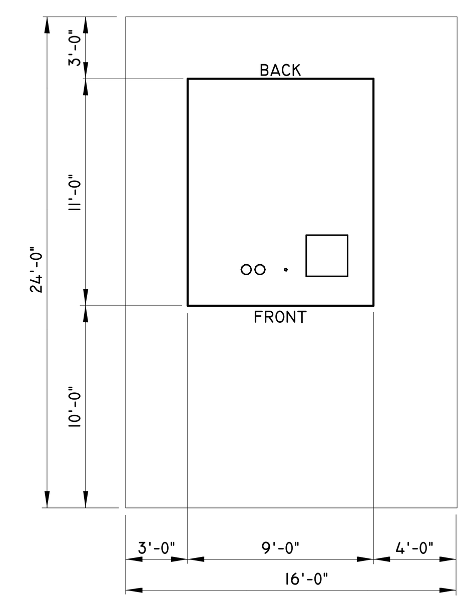

MINIMUM EASEMENT REQUIREMENTS

EQUIPMENT WEIGHT 43,000 LBS MAXIMUM

500-5000 KVA PMT FOUNDATION, 12KV & 35KV

BASED ON DISTRIBUTION STANDARD 80-400

NOTES:

1. CONCRETE SHALL BE IN ACCORDANCE WITH CNP SPECIFICATION 007-221-01, LATEST REVISION (MINIMUM COMPRESSION IN 28 DAYS, 3000 PSI).
2. REINFORCING STEEL SHALL BE INTERMEDIATE GRADE DEFORMED BARS IN ACCORDANCE WITH A.S.T.M. SPECIFICATION A-615, GRADE 60, OR BETTER.
3. ALL SPLICES IN REINFORCING SHALL LAP A LENGTH EQUAL TO 24 BAR DIAMETERS.
4. ALL DIMENSIONS ON REINFORCING ARE TO THE CENTER OF BARS.
5. CONCRETE SHALL BE THOROUGHLY WORKED AROUND REINFORCING, ANY EMBEDDED FIXTURES AND INTO ALL CORNERS OF FORMS.
6. IF REQUIRED, GROUT SHALL BE A MIXTURE OF 1 PART CEMENT TO 2 PARTS SAND WITH ENOUGH WATER TO PRODUCE A WORKABLE MIXTURE.
7. CONCRETE IS TO BE POURED ONLY WHEN THE ATMOSPHERIC TEMPERATURE IS A MINIMUM 40\ F. (5\ C.) AND RISING.
8. STRIP BACK ALL VEGETATION AND APPROXIMATELY 12" OF TOP SOIL. REMOVE ALL LOOSE CLODS AND STONES. BACKFILL AND THOROUGHLY COMPACT ALL CONDUIT TRENCHES AND HOLES BEFORE CONCRETE IS PLACED.
9. REINFORCING SHALL HAVE A MINIMUM OF 2" CONCRETE COVER.
10. SLOPE PAD 1" FRONT TO BACK.
11. THE SQUARE OPENING IS FOR THE CUSTOMER'S SECONDARY CONDUITS.
12. CNP WILL NOT ALLOW OTHER FACILITIES TO PASS BENEATH ITS EQUIPMENT PADS. A ONE FOOT MINIMUM HORIZONTAL CLEARANCE SHALL BE MAINTAINED BETWEEN CNP PADS AND ALL OTHER FACILITIES.
13. THE SECONDARY OPENING IS TO BACKFILLED WITH SAND TO WITHIN 4" OF THE TOP OF THE PAD.

DETAIL - PRIMARY TRANSFORMER PAD | NOT TO SCALE | 5

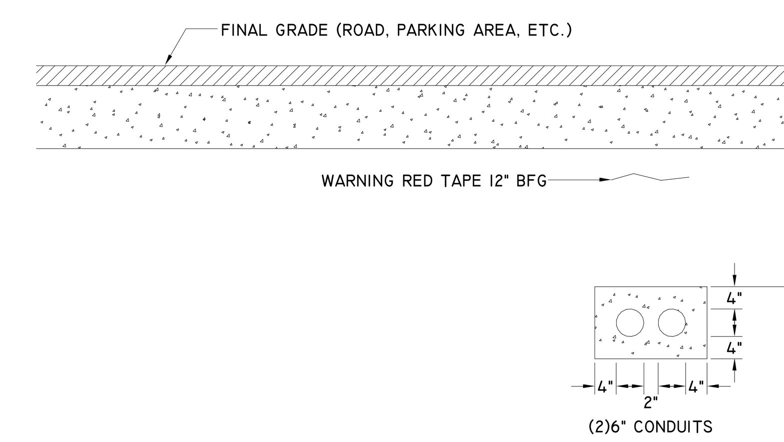

DETAIL - PRIMARY DUCT BANK ELEVATION | NOT TO SCALE | 3

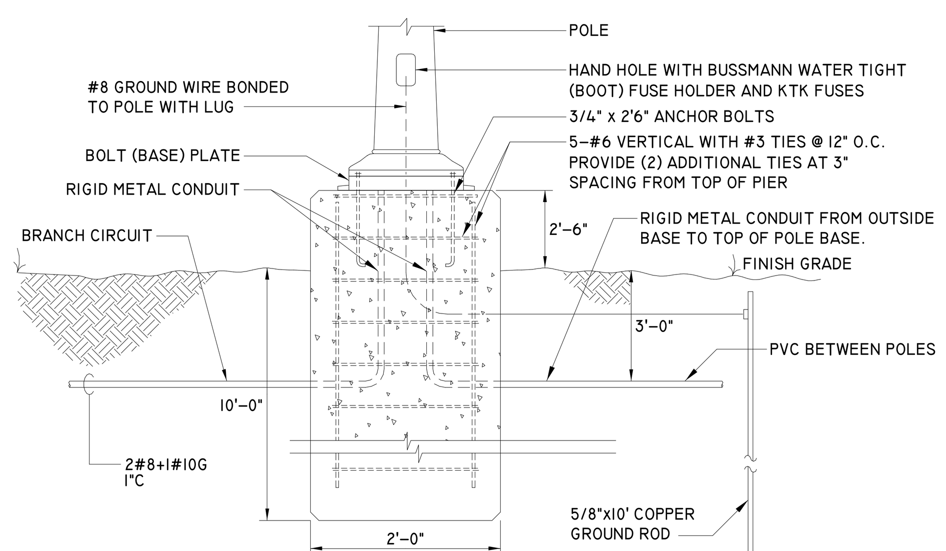

NOTES:

1. DESIGN WIND LOAD FOR 139 MPH WIND SPEED.
2. POLE BASE HEIGHT ABOVE FINISHED GRADE IS FOR PARKING LOT POLE LIGHTS ONLY. POLE BASE HEIGHTS IN PEDESTRIAN WALK AREAS SHALL BE COORDINATED WITH THE ARCHITECT BEFORE FORMING THE BASE.
3. PROVIDE NEAT SONOTUBE FINISH. NO APPLIED CEMENT SLURRY FINISH WILL BE ALLOWED.
4. ALL ANCHOR BOLTS SHALL BE FULL LENGTH HOT DIP GALVANIZED INCLUDING ALL HARDWARE.

DETAIL - POLE BASE | NOT TO SCALE | 8

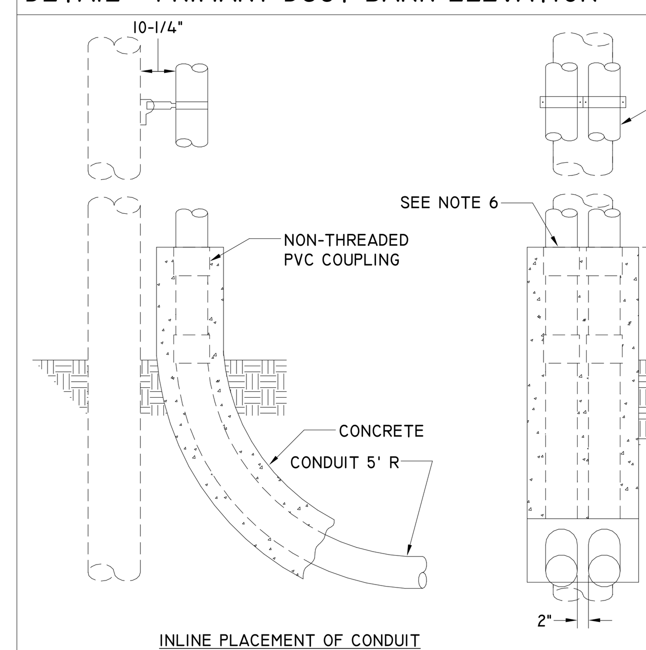

NOTES:

1. CONDUIT BENDS AT TERMINAL POLE SHALL BE PVC.
2. BRACE THE POLE SECURELY BEFORE TRENCHING.
3. INSTALL CONDUIT BENDS TO BASE OF POLE. ADD PORTIONS OF STRAIGHT CONDUIT AS NECESSARY TO OBTAIN THE PROPER HEIGHT ABOVE FINAL GRADE.
4. ATTACHE COUPLING TO END OF CONDUIT.
5. INSERT, BUT DO NOT GLUE A SHORT PEICE OF SCRAP PVC CONDUIT INTO THE TOP COUPLING. TIE CONDUIT TO BRACKET.
6. FORM AREA AROUND PEDESTAL TO THE TOP OF THE COUPLING. FORM PEDESTAL SO THAT NO CONCRETE WILL CONTACT POLE.
7. AFTER INSPECTION BY CNP, POUR CONCRETE TO TOP OF COUPLINGS.
8. ALL CONDUITS SHALL HAVE A MINIMUM 4" CONCRETE COVER.

DETAIL - TERMINAL POLE CONDUIT PLACEMENT | NOT TO SCALE | 2

NOTE:
THIS INFORMATION MAY NOT CONTAIN ALL DETAILS REQUIRED FOR CONSTRUCTION. APPROPRIATE MODIFICATION MAY BE REQUIRED TO ENSURE SUITABILITY OF THESE DRAWINGS FOR THE SPECIFIC APPLICATION. IT IS THE USER'S RESPONSIBILITY TO ENSURE INSTALATION OF EQUIPMENT/SYSTEM IS IN ACCORDANCE WITH BUILDING/PROJECT SPECIFICATIONS, APPLICABLE CODES AND STANDARDS.

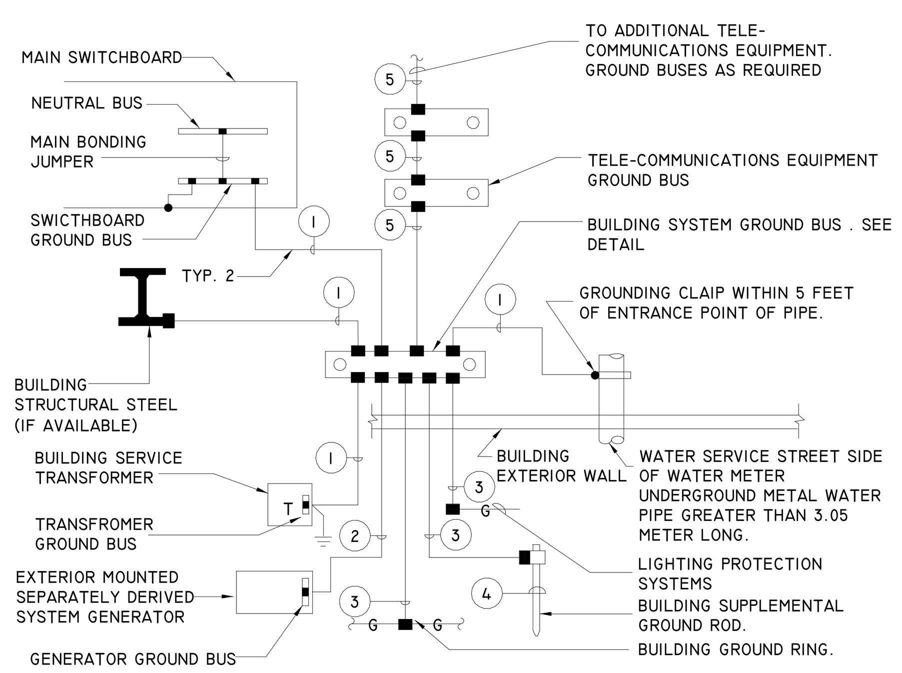

LEGEND:

- ● INDICATES BOLTED CONNECTION.
- ■ INDICATES EXOTHERMIC WELD CONNECTION, COMPATIBLE WITH MATERIALS BEING JOINED.
- (1) #4/0 AWG INSULATED COPPER GROUND CONDUCTOR IN 3/2"C.
- (2) #4/0 AWG COPPER GROUND CONDUCTOR ENCASED IN CONCRETE.
- (3) #4/0 AWG BARE COPPER GROUND CONDUCTOR.
- (4) 3/4" x 10' LONG COPPER-CLAD GROUND ROD DRIVEN WITH TOP 12" BELOW GRADE IN GROUNDING WELL.
- (5) #3/0 AWG INSULATED COPPER GROUND CONDUCTOR IN 1-1/4" CONDUIT.

DETAIL - BUILDING GROUNDING ELECTRODE SYSTEM | NOT TO SCALE | 11

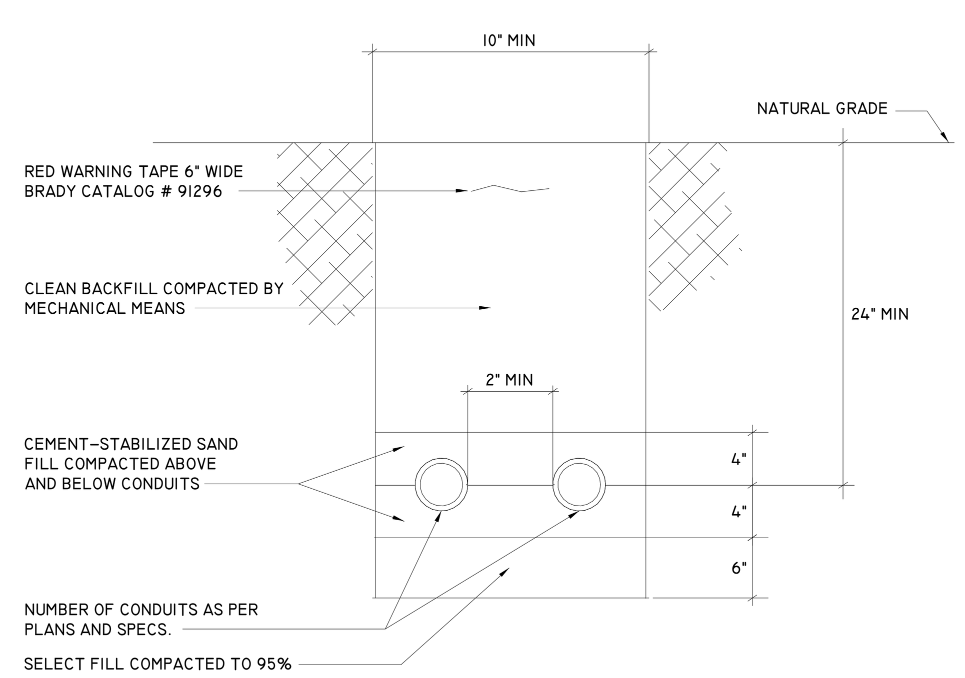

DETAIL - TRENCH (OTHER THAN SERVICE FEEDERS) | NOT TO SCALE | 7

KEYED NOTES:

1. #4 BARS IN THE CONCRETE ENVELOPE AT ROAD AND VEHICLE CROSSING, OR AS SPECIFIED ON THE DRAWINGS. USE #5 STIRRUPS ON 18" CENTERS.
2. SEE ONE LINE DIAGRAM FOR NUMBER & SIZE OF CONDUITS
3. SPACERS 8'-0" TO 10'-0" O.C. OR A MINIMUM OF ONE SUPPORT PER JOINT.
4. COVER SHALL BE 4'-0" MINIMUM BELOW SOIL SURFACE AND 4'-0" MINIMUM BELOW STREET AND PARKING LOTS, SIDEWALKS.
5. ENVELOPE OF CONCRETE COLORED RED. IT WILL HAVE A NOMINAL COMPRESSIVE STRENGTH OF 2800 PSI AT 28 DAYS. CONCRETE ENVELOPE NOT REQUIRED UNDER BUILDING SLABS.
6. SCOTCH NO. 88 TAPE. APPLY 2 LAYERS, HALF-LAPPED, 2" ABOVE AND BELOW CONCRETE LEVEL.
7. PROTECT EXPOSED CONDUIT ENDS DURING CONSTRUCTION WITH PIPE PLUG OR CAPS. FUTURE AND SPARE CONDUITS ENDS SHALL HAVE PIPE PLUGS OR CAPS.
8. CONNECT BONDING JUMPER TO GROUND BUS OR GROUND GRID. CONNECT TO STEEL ELBOW WITH BURNDY TYPE "GAR".
9. ADAPTER FROM NON-METALLIC CONDUIT.
10. LONG RADIUS RIGID GALVANIZED STEEL CONDUIT ELBOW AND COUPLING USED AS REQUIRED.
11. EQUIPMENT BONDING JUMPER PER TABLE 250.122.
12. CONDUIT COUPLING WITH GROUNDING TYPE INSULATED BUSHING.
13. RIGID GALVANIZED STEEL OR PVC COATED CONDUIT NIPPLE.
14. WHEN ENTERING INTO THE BOTTOM OF ENCLOSURE, TOP OF INSULATED BUSHING IS 2" ABOVE FLOOR.
15. MINIMUM IS 6" IN UNPAVED AREAS.

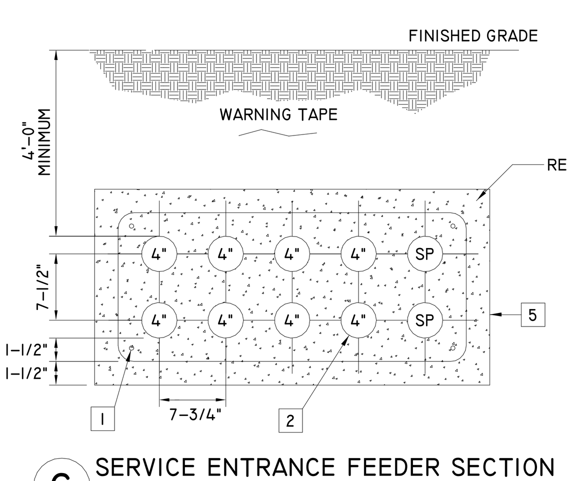

C SERVICE ENTRANCE FEEDER SECTION
SCALE: NTS

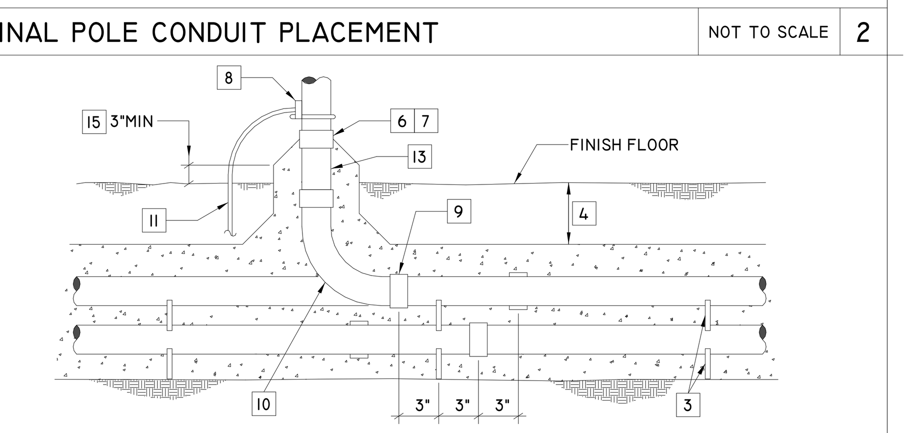

B TRANSITION FROM DUCT BANK
SCALE: NTS

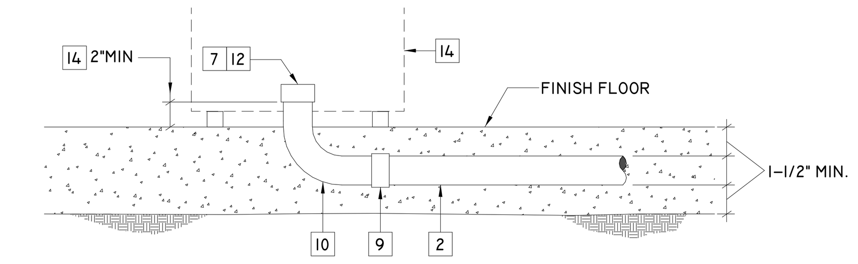

A CONDUIT EMBEDDED IN SLAB
SCALE: NTS

DETAIL - DUCT BANK | NOT TO SCALE | 1

FSGROUP® ARCHITECTS
13105 Northwest Fwy Suite 1110
Houston Texas 77040
713 344 1752 Office
www.fsdesignbuild.com

PROJECT NAME

INFORMATION TECHNOLGY BUILDING
EUGENE HEIMANN CIRCLE
FORT BEND COUNTY , TEXAS

CONSULTANTS

Infrastructure Associates
INFRASTRUCTURE ASSOCIATES, INC.
6117 RICHMOND AVENUE, SUITE 200
HOUSTON, TEXAS 77057-6267
(713) 622-0120 PH (713) 622-0557 FAX
TBPE FIRM REGISTRATION #F-4506
WWW.IAHOUSTON.COM

PROFESSIONAL SEAL

STATE OF TEXAS
SEVAK KALANTARIANS
97498
LICENSED
PROFESSIONAL ENGINEER
2024-05-15

ISSUED FOR
ISSUED FOR PROPOSALS AND PERMIT

REVISIONS

No.	DESCRIPTION	DATE

KEY PLAN

TRUE NORTH

SHEET TITLE
DETAILS

SCALE

DATE
05/15/2024

PROJECT NUMBER
2319

SHEET NUMBER
E501

ADJUST AND PROGRAM FOR SEQUENCE OF OPERATIONS

WHEN THE REMOVABLE PARTITION IS IN THE CLOSED POSITION EACH TRAINING ROOM SHALL BE CONTROLLED INDEPENDENTLY AS SEPARATE SPACES:

1. (1) WALLSTATION SWITCH SHALL BE USED TO TURN LIGHTS ON/OFF AND ADJUST LIGHTING LEVEL FOR PROJECTOR ZONE.
2. (1) WALLSTATION SWITCH SHALL BE USED TO TURN LIGHTS ON/OFF AND ADJUST LIGHTING LEVEL FOR REST OF SPACE ZONE.
3. (1) WALLSTATION SWITCH SHALL BE USED TO TURN LIGHTS ON/OFF AND ADJUST LIGHTING LEVEL FOR CORRIDOR ZONE.
4. THE OCCUPANCY SENSOR SHALL TURN LIGHTS OFF AFTER NO OCCUPANCY IS DETECTED FOR 20 MINUTES IN ACCORDANCE WITH IECC 2015.

WHEN THE REMOVABLE PARTITION IS IN THE OPEN POSITION THE TRAINING ROOM SHALL BE CONTROLLED AS ONE SPACE:

1. (1) WALLSTATION SWITCH SHALL BE USED TO TURN LIGHTS ON/OFF AND ADJUST LIGHTING LEVEL FOR BOTH PROJECTOR ZONES.
2. (1) WALLSTATION SWITCH SHALL BE USED TO TURN LIGHTS ON/OFF AND ADJUST LIGHTING LEVEL FOR BOTH REST OF SPACE ZONES.
3. (1) WALLSTATION SWITCH SHALL BE USED TO TURN LIGHTS ON/OFF AND ADJUST LIGHTING LEVEL FOR BOTH CORRIDOR ZONES.
4. THE OCCUPANCY SENSOR SHALL TURN LIGHTS OFF AFTER NO OCCUPANCY IS DETECTED FOR 20 MINUTES IN ACCORDANCE WITH IECC 2015.

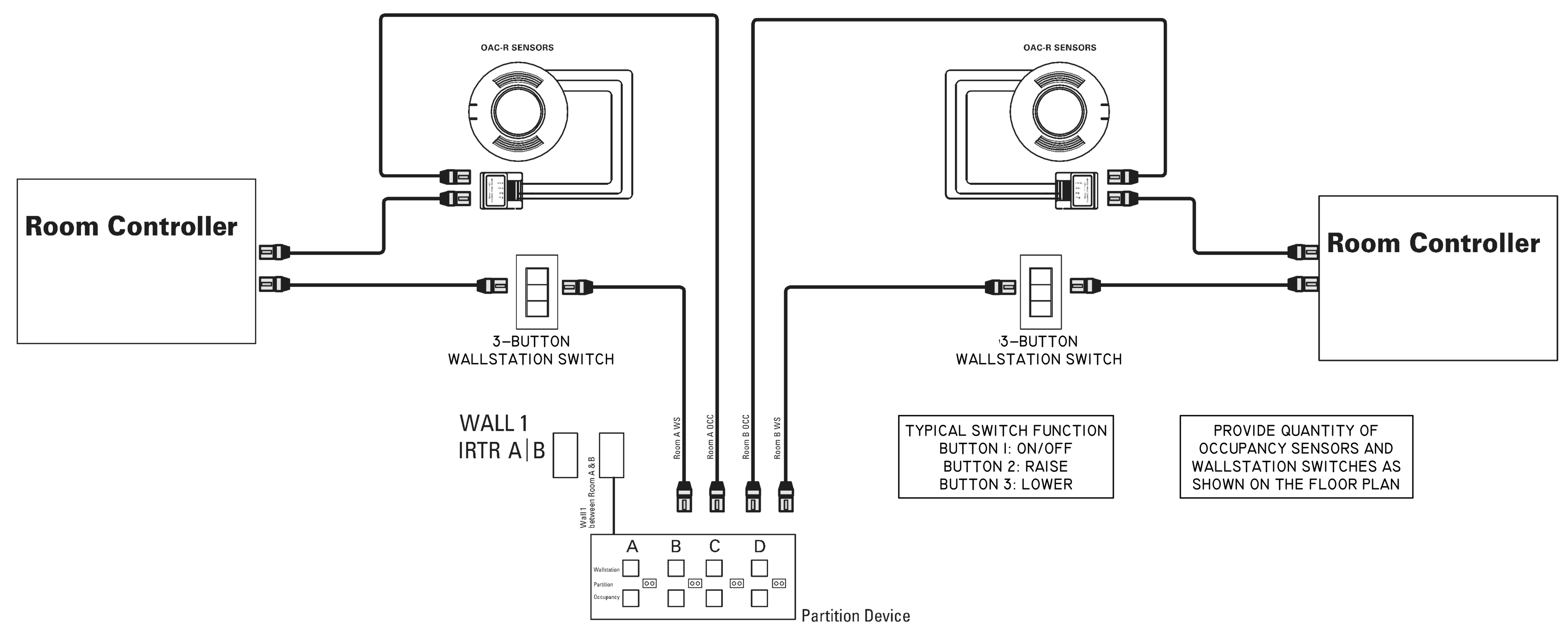

TYPICAL SWITCH FUNCTION
BUTTON 1: ON/OFF
BUTTON 2: RAISE
BUTTON 3: LOWER

PROVIDE QUANTITY OF OCCUPANCY SENSORS AND WALLSTATION SWITCHES AS SHOWN ON THE FLOOR PLAN

DETAIL - TRAINING ROOM 102 LIGHTING CONTROL SYSTEM DIAGRAM | NOT TO SCALE | 11

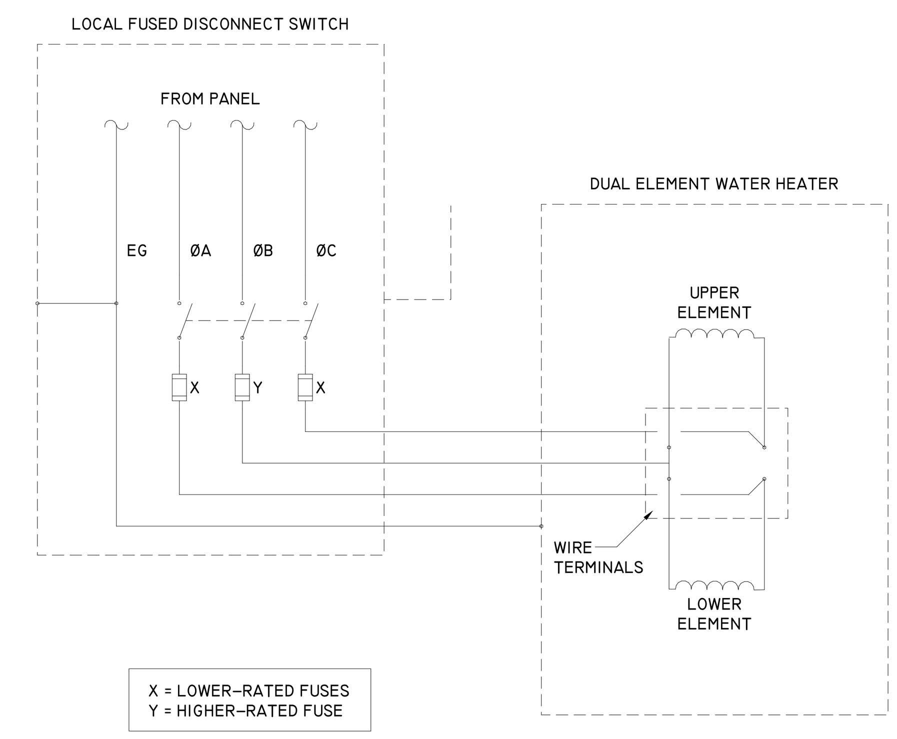

DETAIL - ASYMMETRIC 30 ∅ SIMULTANEOUS WATER HEATER | NOT TO SCALE | 8

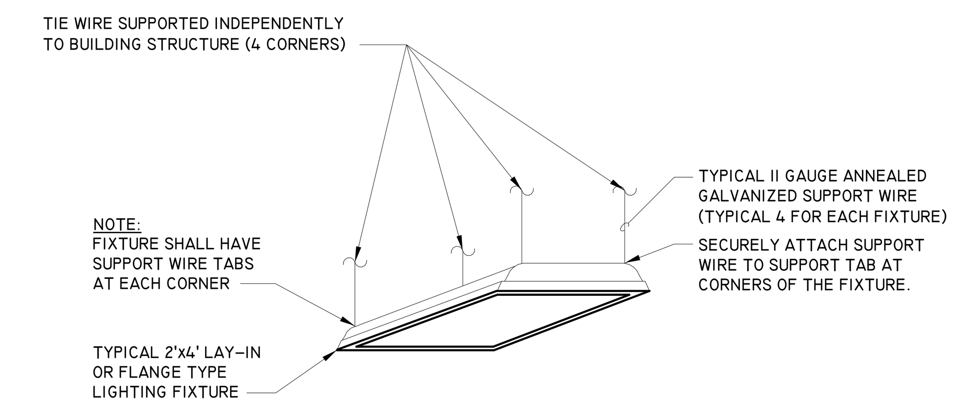

DETAIL - LIGHT FIXTURE SUPPORT | NOT TO SCALE | 4

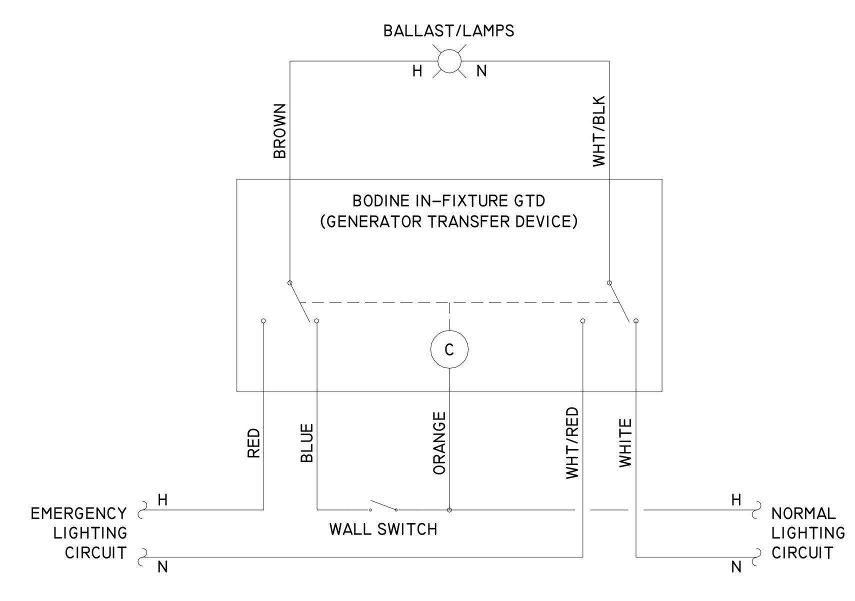

PROVIDE A BODINE GTD (GENERATOR TRANSFER DEVICE) WIRED AS SHOWN BELOW IN EACH FIXTURE INDICATED AS EMERGENCY EGRESS LIGHTING ON LIGHTING PLANS AND LIGHT FIXTURE SCHEDULE WITHIN THE FACILITY.

DETAIL - EMERGENCY GENERATOR TRANSFER DEVICE (GTD) | NOT TO SCALE | 7

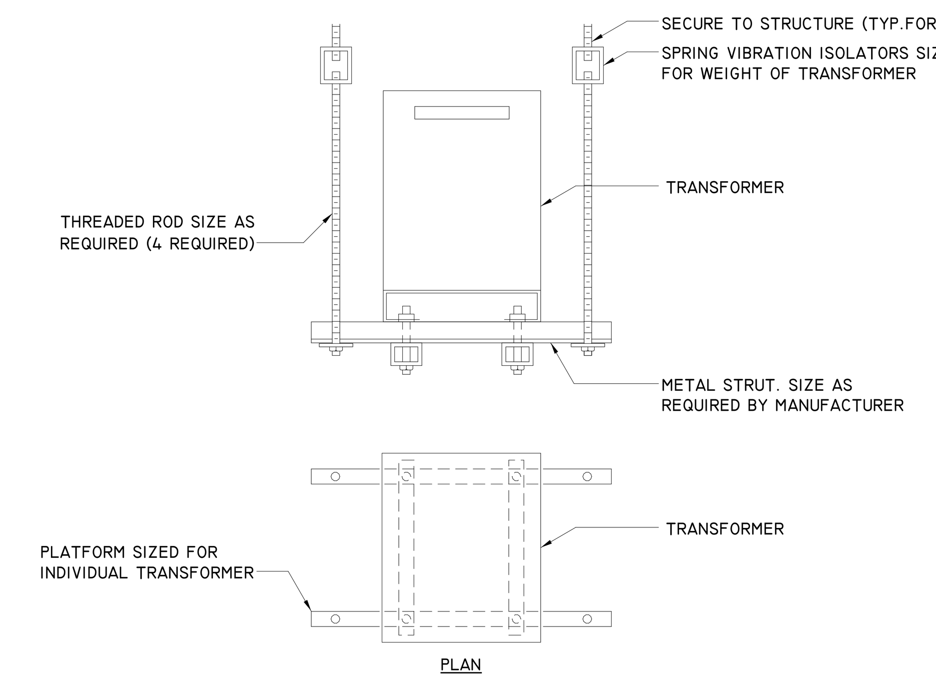

DETAIL - TRANSFORMER SUSPENDED FROM STRUCTURE | NOT TO SCALE | 3

DETAIL - | NOT TO SCALE | 13

OCCUPANCY SENSORS: LEVITON OSC20-M0W
POWER PACK: LEVITON OSP20-0D0
ADD-A-RELAY: LEVITON OSP20-RD0/BAS

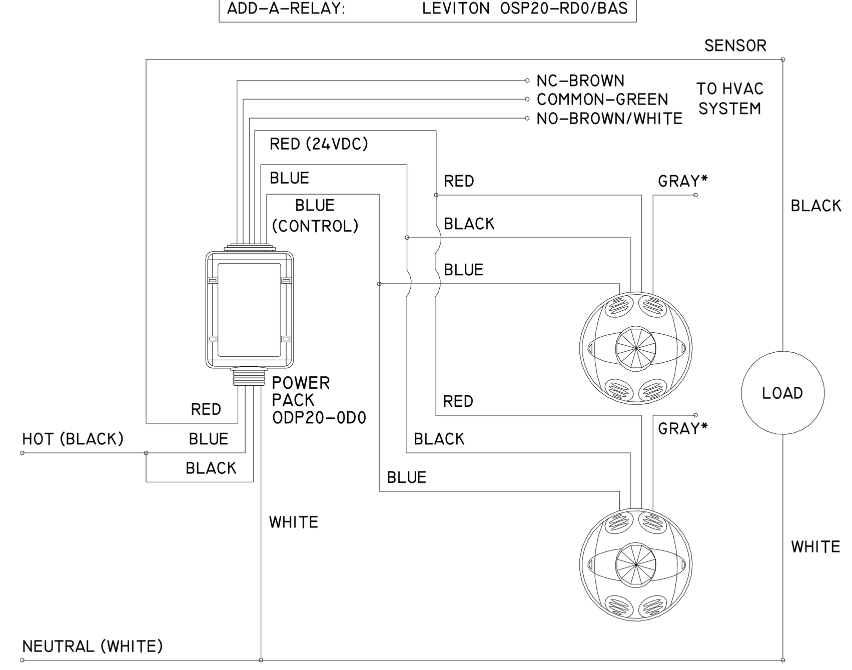

OCCUPANCY SENSOR SHALL BE PROGRAMMED AUTOMATIC OFF / AUTOMATIC ON
VACANCY SENSOR SHALL BE PROGRAMMED AUTOMATIC OFF / MANUAL ON

DETAIL - CEILING OCCUPANCY / VACANCY SENSOR | NOT TO SCALE | 10

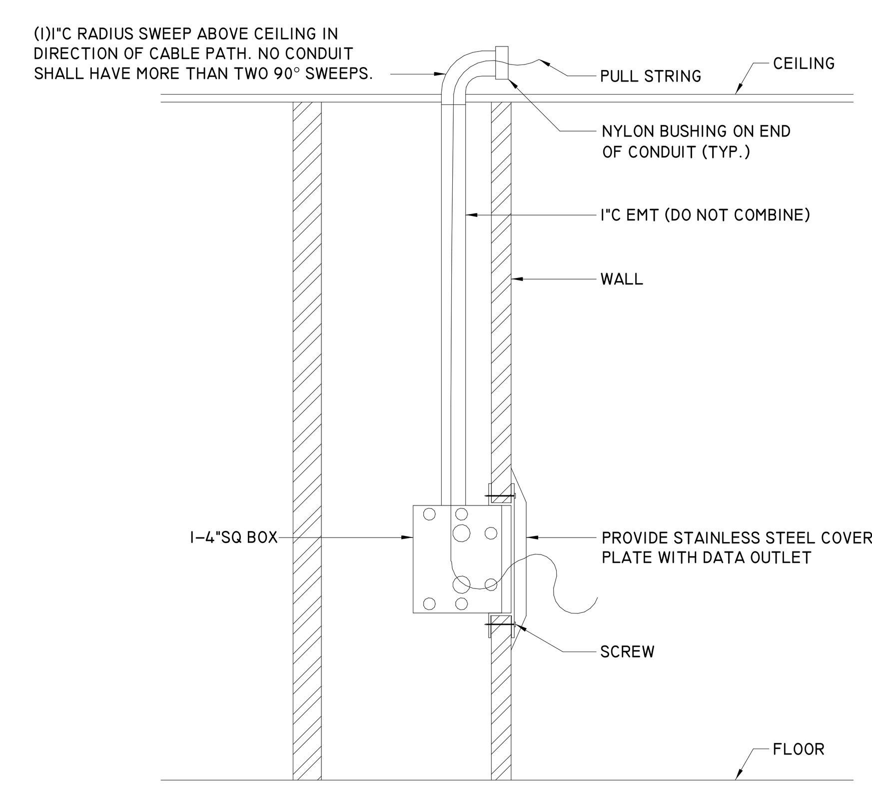

DETAIL - DATA OUTLETS | NOT TO SCALE | 6

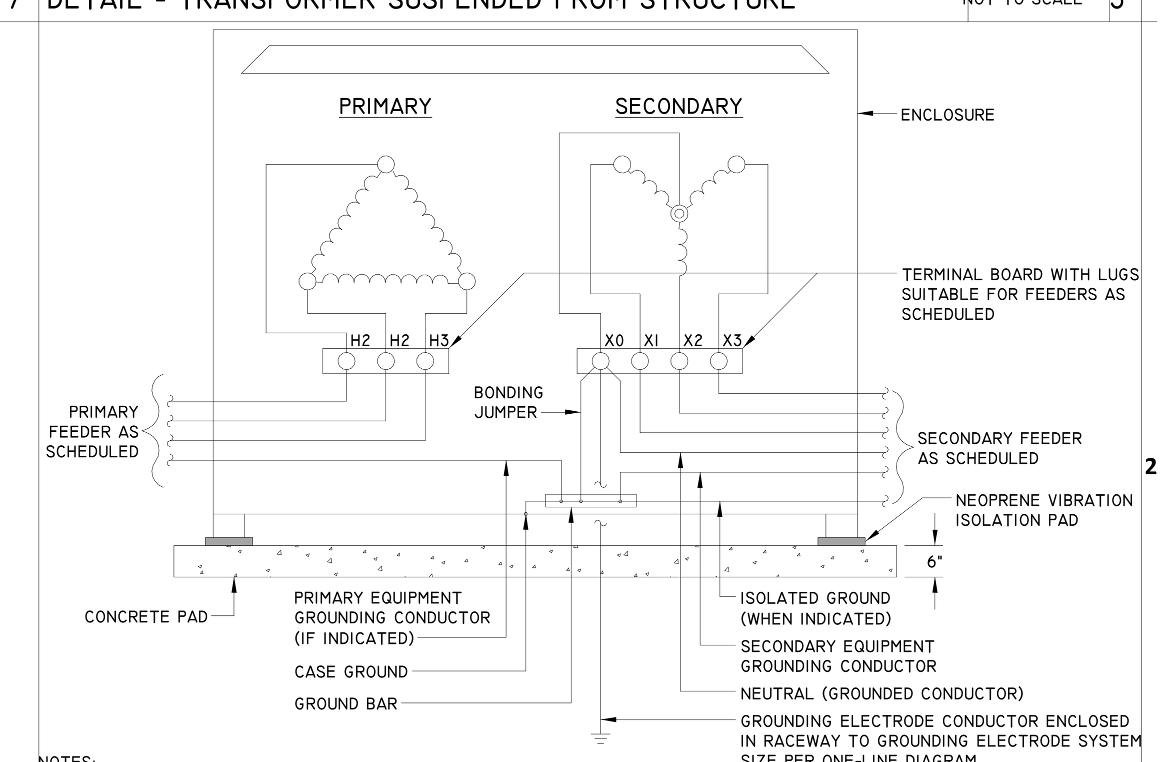

NOTES:
INSTALL ALL FLOOR MOUNTED TRANSFORMERS AS INDICATED ON 6" HOUSEKEEPING PAD 3" LARGER THAN THE TRANSFORMER (6" AT THE REAR), COMPLYING WITH MANUFACTURER'S WRITTEN INSTRUCTIONS, APPLICABLE REQUIREMENTS OF NEC, NESC, NEMA, ANSI, AND IEEE STANDARDS, AND IN ACCORDANCE WITH RECOGNIZED INDUSTRY PRACTICES TO ENSURE THAT PRODUCTS FULFILL REQUIREMENTS. PROVIDE NEC WORKING CLEARANCE IN FRONT OF TRANSFORMERS ASSUMING THEY WILL REQUIRE EXAMINATION WHILE ENERGIZED.

DETAIL - TRANSFORMER GROUNDING | NOT TO SCALE | 2

DETAIL - | NOT TO SCALE | 12

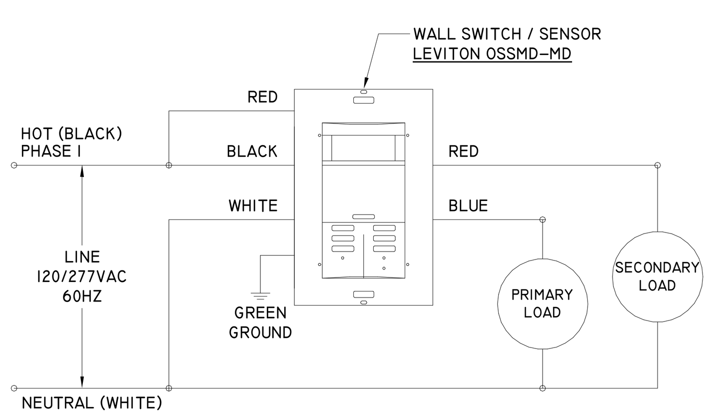

OCCUPANCY SENSOR SHALL BE PROGRAMMED AUTOMATIC OFF / AUTOMATIC ON
VACANCY SENSOR SHALL BE PROGRAMMED AUTOMATIC OFF / MANUAL ON

DETAIL - WALL OCCUPANCY / VACANCY SENSOR SWITCH | NOT TO SCALE | 9

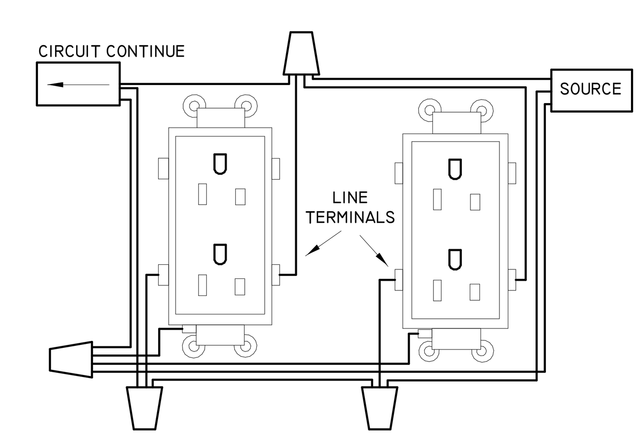

NOTES:
1. CIRCUITING TO ALL NON DEDICATED ELECTRICAL RECEPTACLES AND SWITCHES ARE REQUIRED TO UTILIZE PARALLEL CIRCUITING BY THE USE OF "PIG TAILS" TO EACH DEVICE SO THAT IF AN OUTLET IS REMOVED OR FAILS ELECTRICAL CONTINUITY OF THE CIRCUIT WILL NOT BE COMPROMISED.
2. ALL ELECTRICAL WIRING MUST BE PROPERLY SPLICED BY TWISTING THE WIRES TOGETHER AND USE OF APPROVED AND LISTED COMPRESSION WIRE NUTS FOR ANY WIRING.
3. DO NOT USE END TO END BUTT-SPLICING CONNECTORS FOR ANY WIRING.
4. WRAP AROUND THE TERMINALS WITH ELECTRICAL TAPE.

DETAIL - PIGTAIL RECEPTACLE WIRING | NOT TO SCALE | 5

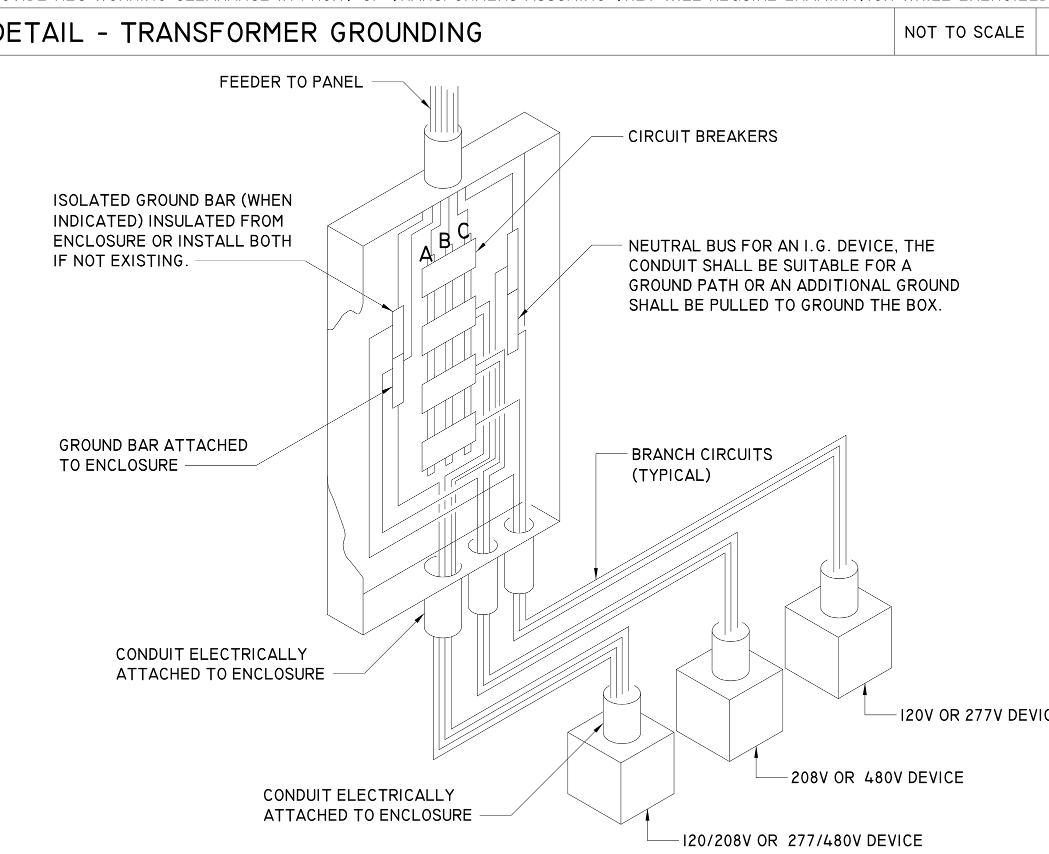

DETAIL - PANEL GROUNDING | NOT TO SCALE | 1

FSGROUP® ARCHITECTS
13105 Northwest Fwy Suite 1110
Houston Texas 77040
713 344 1752 Office
www.fsdesignbuild.com

PROJECT NAME

THE STATE OF TEXAS · FORT BEND COUNTY

INFORMATION TECHNOLGY BUILDING
EUGENE HEIMANN CIRCLE
FORT BEND COUNTY , TEXAS

CONSULTANTS

Infrastructure Associates
INFRASTRUCTURE ASSOCIATES, INC.
6117 RICHMOND AVENUE, SUITE 200
HOUSTON, TEXAS 77057-6267
(713) 622-0120 PH (713) 622-0557 FAX
TBPE FIRM REGISTRATION #F-4506
WWW.IAHOUSTON.COM

PROFESSIONAL SEAL

STATE OF TEXAS
SEVAK KALANTARIANS
97498
LICENSED
PROFESSIONAL ENGINEER
2024-05-15

ISSUED FOR
ISSUED FOR PROPOSALS AND PERMIT

REVISIONS

No.	DESCRIPTION	DATE

KEY PLAN

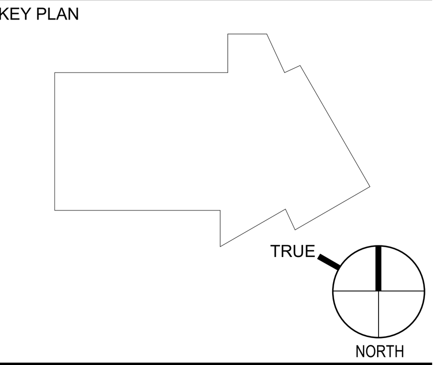

SHEET TITLE
DETAILS

SCALE
NOT TO SCALE

DATE
05/15/2024

PROJECT NUMBER
2319

SHEET NUMBER
E502

General Information: 93PM UPS 20-200kW

93PM System Specifications

System Voltage:	480V in, 480V out (3 wire)	UPS Frame Capacity:	100kW
Quantity of 50kW Power Modules:	2	UPS kW Rating:	100
Internal Redundant Configuration:	No	Internal Battery Configuration:	None
Input Feed:	Dual Feed	ESS Included:	No
Communication:	Industrial Gateway Card, Industrial Relay Card, and EMP	Accessories:	Sidecar Bypass Cabinet
Side Car:	4 Breaker MBS, Right Mount	Side Car Breaker Rating:	65kAIC MBS w/ Aux contact
Exhaust Configuration:	Top Air Exhaust	Internal Estimated Runtime:	None
UPS Dimensions (H" x W" x D"):	74 x 30 x 42	UPS Weight (lbs):	1107

UPS System Dimensions

Combined Matching System Dimensions (H" x W" x D", excluding non-matching panels): 74 x 81 x 42

93PM Battery Cabinet

BS14866R00201100		Battery Cabinet:	Lithium-Ion
DC Voltage:	486	Battery Cabinet Weight (lbs):	2126
Battery Cabinet Width (in):	51	90" H x 23.5" D	
kW for Runtime Calculation:	100	Estimated Runtime (min) at 77 degrees F:	33.3
# of Cabinets/Strings:	2/2	Battery Manufacturer:	Samsung
Battery Installation:	Remote Installation	OSHPD Rated:	No

UPS Accessories

Floor Stand:	None	Chimney:	None

The information on this document is created by Eaton Corporation. It is disclosed in confidence and it is only to be used for the purpose in which it is supplied.	PREPARED BY SHANNON CROWDEN	DATE 5/17/2024	Eaton	
	APPROVED BY	DATE	JOB NAME 7603SLC - Fort Bend County - IT Office Building DESIGNATION	
	VERSION 10.0.0.1		TYPE 93PM UPS 20-200kW	DRAWING TYPE Customer Appr.
NEG-ALT Number BMPI0506X4K1-0003	REVISION 0	DWG SIZE A	G.O.	ITEM / SHEET 1 of 2

Structure	1	2
Ship-Inches Ship-MM		
Width-Inches Width-MM	51.00 1295	30.00 762
Depth-Inches Depth-MM	21.00 533	42.00 1066
Height-Inches Height-MM	90.00 2286	74.00 1879
Weight-Lbs Weight-Kg	2126.00 964.17	1107.00 502.04

The information on this document is created by Eaton Corporation. It is disclosed in confidence and it is only to be used for the purpose in which it is supplied.	PREPARED BY SHANNON CROWDEN	DATE 5/17/2024	Eaton	
	APPROVED BY	DATE	JOB NAME 7603SLC - Fort Bend County - IT Office Building DESIGNATION	
	VERSION 10.0.0.1		TYPE 93PM UPS 20-200kW	DRAWING TYPE Customer Appr.
NEG-ALT Number BMPI0506X4K1-0003	REVISION 0	DWG SIZE A	G.O.	ITEM / SHEET 2 of 2

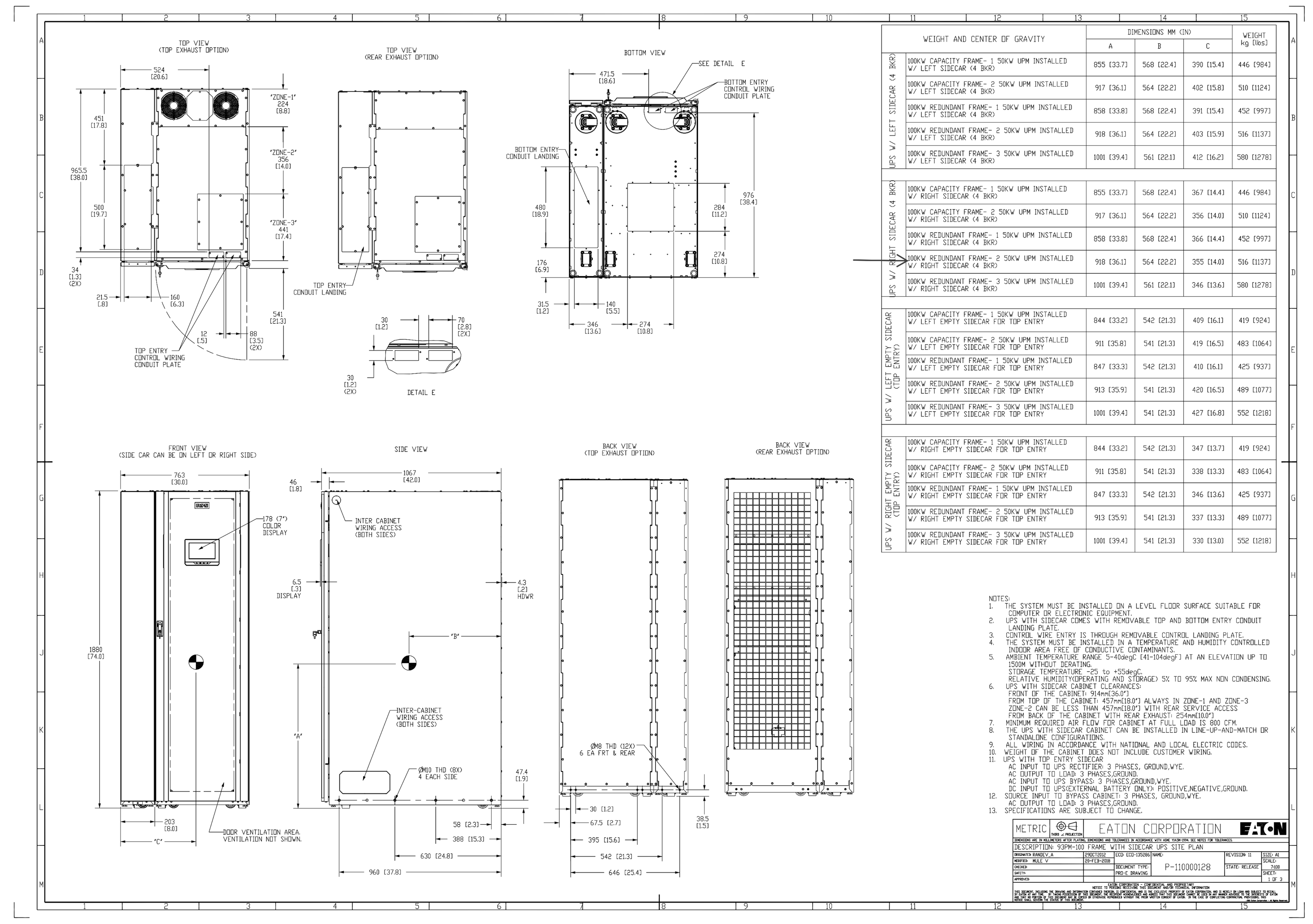

GO/NEG-Alt-Date: BMPI0506X4K1-0003-5/17/2024	Job Name: 7603SLC - Fort Bend County - IT Office Building
Item Number: / Catalog Number: 9PG10D0209J40R2	Designation:

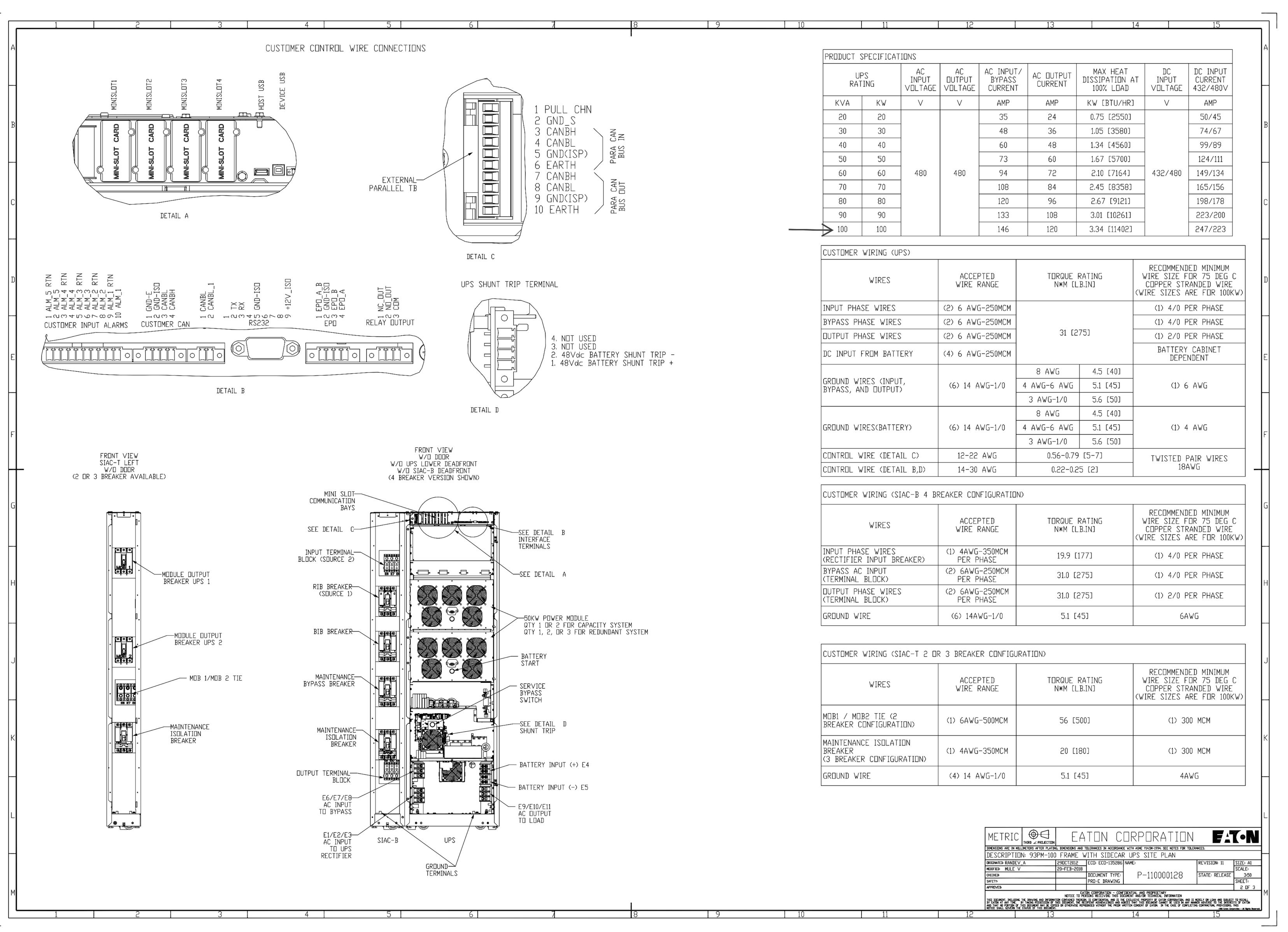

GO/NEG-Alt-Date: BMPI0506X4K1-0003-5/17/2024	Job Name: 7603SLC - Fort Bend County - IT Office Building
Item Number: / Catalog Number: 9PG10D0209J40R2	Designation:

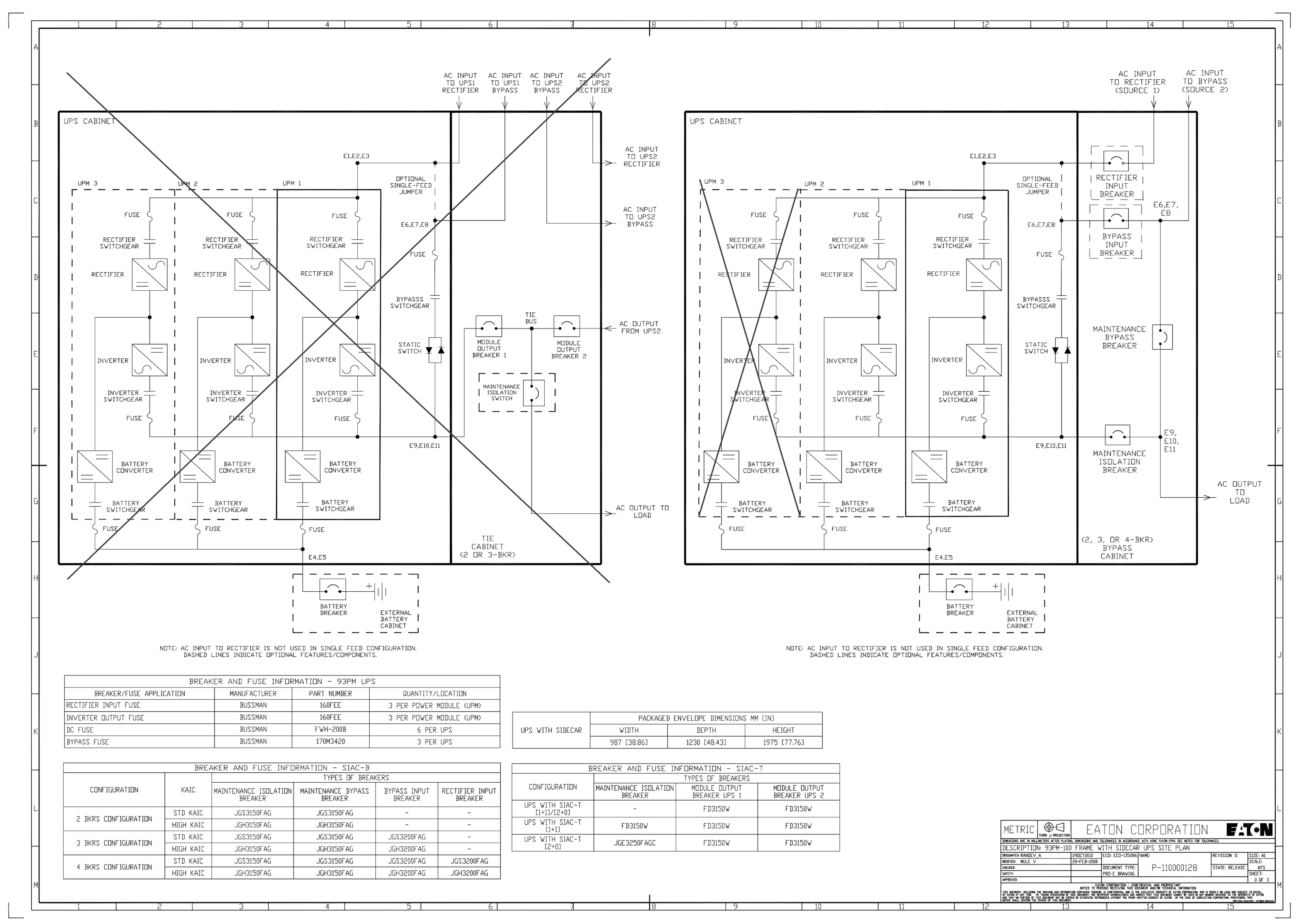

GO/NEG-Alt-Date: BMPI0506X4K1-0003-5/17/2024	Job Name: 7603SLC - Fort Bend County - IT Office Building
Item Number: / Catalog Number: 9PG10D0209J40R2	Designation:

FSGROUP ARCHITECTS
13105 Northwest Fwy Suite 1110
Houston Texas 77040
713 344 1752 Office
www.fsdesignbuild.com

PROJECT NAME

INFORMATION TECHNOLGY BUILDING
EUGENE HEIMANN CIRCLE
FORT BEND COUNTY . TEXAS

CONSULTANTS

Infrastructure Associates
INFRASTRUCTURE ASSOCIATES, INC.
6117 RICHMOND AVENUE, SUITE 200
HOUSTON, TEXAS 77057-6267
(713) 622-0120 PH (713) 622-0557 FAX
TBPE FIRM REGISTRATION #F-4506
WWW.IAHOUSTON.COM

PROFESSIONAL SEAL

STATE OF TEXAS
SEVAK KALANTARIANS
97498
LICENSED
PROFESSIONAL ENGINEER
2024-05-15

ISSUED FOR

ISSUED FOR PROPOSALS AND PERMIT

REVISIONS

No.	DESCRIPTION	DATE

KEY PLAN

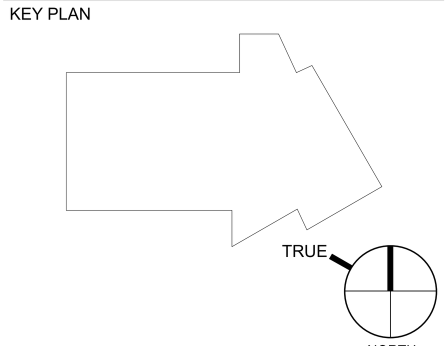

SHEET TITLE

BASIS OF DESIGN - UPS-A & UPS-B

SCALE

DATE 05/16/2024

PROJECT NUMBER 2319

SHEET NUMBER

E601

Specification sheet

Gaseous fuel generator set

1000 kW - 1300 kW
60 Hz

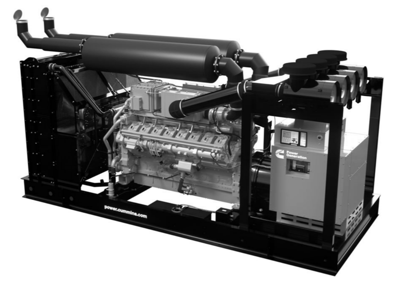

Description

You can count on the 1000-1300 kW natural gas generator set (GenSet) for the reliability, quality, and dependability that is genuine Cummins performance. EPA-certified, this fully-integrated power generation system provides optimum performance and versatility for demand response and stationary standby power applications.

Features

- Over 100 years of Cummins power generation technology and innovation
- Listed to UL 2200 and CSA standards for all low voltage models
- Stamford rugged and reliable alternator with state-of-the-art technology
- One-year (demand response) and two-year (standby) base warranty supported by a worldwide Cummins twenty-four hour, seven days-a-week, distributor network
- Accepts 100% rated load in a single step
- Capable of meeting NFPA 110 Type 10 for Level 1 emergency or standby power supply systems (EPSSs) when installed and operated per Cummins and NFPA guidelines
- Standard Power Command Control (PCC) 3300 technology provides digital (precise) frequency and voltage regulation
- Efficient and convenient operation monitoring and control options:
  - Modbus over the Internet (monitor and control)
  - Remote HMI (monitor and control)

Model	Power rating 60 Hz kW (kVa) Standby and demand response	Emissions	Data sheet
C1000N6B	1000 (1250)	EPA-certified for stationary emergency and non-emergency applications	NAD-C1000N6B
C1300N6	1300 (1625)		NAD-C1300N6

Engine specifications

Base engine	Cummins QSK 60G
Displacement	3671 in^3 (60.1 L)
Minimum battery capacity	1800 amps at minimum ambient temperature of 0 °F (-18 °C)
Battery charging alternator	55 amps
Starting voltage	24-volt, negative ground
Standard cooling system	104 °F (40 °C)

Alternator specifications

Design	Brushless, 4-pole, drip-proof revolving field
Stator	2/3 pitch
Rotor	Direct-coupled by flexible disc
Insulation system	Class H per NEMA MG1-1.65 or better
Standard temperature rise	125 °C
Exciter type	Permanent Magnet Generator (PMG)
Phase rotation	A (U), B (V), C (W)
Alternator cooling	Direct-drive centrifugal blower

Outline drawing

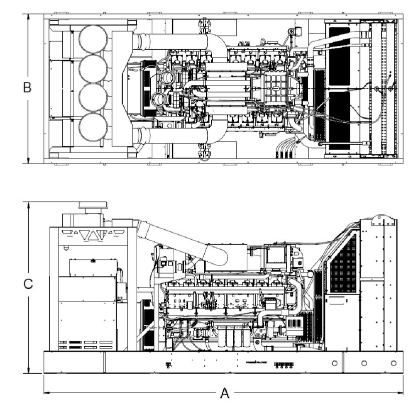

This outline drawing is for reference only.
Do not use for installation design.

All models	Dim "A" in. (cm)	Dim "B" in. (cm)	Dim "C" in. (cm)
Open set	240 (610)	102 (259)	115 (292)
Sound-attenuated Level II enclosure	403 (1024)	102 (259)	128 (325)

NOTE: Consult drawings for applicable weights. Contact the factory for additional information.

GenSet options and accessories

Alternator
- 80 °C rise
- 105 °C rise
- 125 °C rise
- 120/240 V, 200 W anti-condensation heater

Fuel system - flexible fuel connector and fuel strainer

Exhaust system - critical grade silencer

Generator set
- Batteries
- Battery charger - 120/208/240 V, 20A
- Main line circuit breaker
- Electronically-operated (E.O.) generator breaker
- PowerCommand Network I/O module
- PowerCommand Network Aux 101, 102 module
- Remote control HMI with extension harness
- Remote annunciator panel
- Spring isolators
- Audible alarm
- Sound-attenuated enclosure Level II with silencer
- Warranty - five-year standby including parts, labor, and travel

Applicable codes and standards

The Underwriters Laboratory (UL) 2200 Listing is a comprehensive safety standard encompassing the design, construction, and performance of stationary GenSets.

CSA Group tests products under a formal process to ensure that they meet the safety and/or performance requirements of applicable standards. This GenSet is certified to: CSA 22.2 No. 100 Motors and Generators; CSA 22.2 No. 0.4-044 Bonding of Electrical Equipment; CSA 22.2 No. 14 Industrial Control Equipment; and CSA 22.2 No. 0 General Requirements - Canadian Electrical Code, Part II. All low voltage models are CSA-certified to product class 4215-01.

Engine is certified to Stationary Emergency and Non-Emergency U.S. EPA New Source Performance Standards (NSPS), 40 CFR 60 subpart JJJJ.
U.S. applications must be applied per EPA regulations.

ISO 9001:2015 **This product has been manufactured under the controls established by an approved management system that conforms with ISO 9001:2015.**

FSGROUP® ARCHITECTS
13105 Northwest Fwy Suite 1110
Houston Texas 77040
713 344 1752 Office
www.fsdesignbuild.com

PROJECT NAME

THE STATE OF TEXAS · FORT BEND COUNTY

INFORMATION TECHNOLGY BUILDING
EUGENE HEIMANN CIRCLE
FORT BEND COUNTY . TEXAS

CONSULTANTS

Infrastructure Associates
INFRASTRUCTURE ASSOCIATES, INC.
6117 RICHMOND AVENUE, SUITE 200
HOUSTON, TEXAS 77057-6267
(713) 622-0120 PH (713) 622-0557 FAX
TBPE FIRM REGISTRATION #F-4506
WWW.IAHOUSTON.COM

PROFESSIONAL SEAL

STATE OF TEXAS
SEVAK KALANTARIANS
97498
LICENSED
PROFESSIONAL ENGINEER
2024-05-15

ISSUED FOR
ISSUED FOR PROPOSALS AND PERMIT

REVISIONS

No.	DESCRIPTION	DATE

KEY PLAN

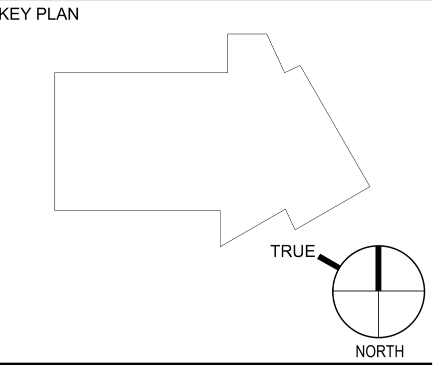

SHEET TITLE
BASIS OF DESIGN - GENERATOR

SCALE

DATE
05/15/2024

PROJECT NUMBER
2319

SHEET NUMBER
E602

TECHNOLOGY GENERAL NOTES

1. FOLLOW TELECOM STANDARDS AND PRACTICES. SEE DIVISION 27 SPECIFICATIONS AND T DRAWINGS.
2. REGISTERED COMMUNICATIONS DISTRIBUTION DESIGNER (RCDD) SUPERVISOR SHALL REVIEW, APPROVE AND STAMP ALL SHOP DRAWINGS. COORDINATE DRAWINGS AND RECORD DRAWINGS.
3. ALL WALL PENETRATIONS SHALL BE SEALED WITH APPROVED FIRE STOPPING.
4. REFER TO THE ELECTRICAL FLOOR PLAN DRAWINGS FOR ADDITIONAL ROUGH-IN REQUIREMENTS. WHERE THERE ARE DRAWING DISCREPANCIES, THE CONTRACTOR SHALL INSTALL THE GREATER QUANTITY OF DEVICES.
5. REFER TO THE SITE PLAN ON AND RISER DIAGRAM FOR TELECOMMUNICATION BACKBONE CONDUITS/CABLES. FIELD COORDINATE EXACT ROUTING WITH OTHER TRADES.
6. ALL COMMUNICATIONS EQUIPMENT SHOWN SHALL BE PROVIDED AND INSTALLED BY CONTRACTOR UNLESS NOTED OTHERWISE.
7. BOND ALL COMMUNICATIONS CABINETS, RELAY RACKS, CABLE TRAYS, AND OTHER METALLIC SUPPORTING DEVICES TO TELECOMMUNICATIONS GROUND BUSBAR INSIDE COMMUNICATIONS ROOM. BOND WITH A #6 GROUND CONDUCTOR.
8. ALL HORIZONTAL VOICE AND DATA CABLES SHALL BE DISTRIBUTED VIA MINIMUM 1" CONDUIT AND/OR CABLE TRAY. NO EXCEPTIONS.
9. SINGLE LINE DIAGRAMS, SCHEMATICS, DETAILS AND CONDUIT PATHS SHOWN HEREIN ARE CONCEPTUAL AND ILLUSTRATE ONLY THE FUNCTIONAL RELATIONSHIPS BETWEEN COMPONENTS OF THE SYSTEM. ACCORDINGLY, FULL SHOP DRAWING DEVELOPMENT IS REQUIRED TO REALIZE THE SPECIFIED FUNCTIONS.
10. DEVICE LOCATIONS ON PLANS ARE CONCEPTUAL. LOCATE AS SITE CONDITIONS REQUIRE AND AS APPROVED BY GC.
11. REFER TO THE BID SPECIFICATION FOR ADDITIONAL REQUIREMENTS REGARDING THIS WORK.
12. PAINTING, PATCHING AND FINISHES FOR DEVICES LOCATED IN EXISTING AREAS SHALL MATCH EXISTING FINISHES AS APPROVED BY GC.
13. FINISHES OF DEVICES IN NEW/REMODEL AREAS SHALL BE APPROVED BY GC.
14. WORK AND MATERIALS SHALL CONFORM TO THE MOST CURRENT UNIFORM STANDARD SPECIFICATIONS AND DETAILS FOR CONSTRUCTION AS FURNISHED BY GC. WORK AND MATERIALS NOT IN CONFORMANCE WITH THESE SPECIFICATIONS AND DETAILS ARE SUBJECT TO REMOVAL AND REPLACEMENT AT THE CONTRACTOR'S EXPENSE.
15. IN SOME INSTANCES THE IDF MAY BE OVER 90 METERS FROM THE IP DEVICE DUE TO LEGACY DESIGN STANDARDS WHEN THE BUILDING WAS CONSTRUCTED. IF TESTED CABLE DOES NOT PASS CERTIFICATION, CONTRACTOR MUST USE MIDSPAN EXTENDER INSTALLED INSIDE OF ENCLOSURE. REFERENCE DETAIL SHEETS FOR INSTALLATION DIAGRAM.
16. CABLING INSTALLATION PRACTICES SHALL CONFORM TO ANSI/BICSI N1, AS APPLICABLE. INSTALLED.
17. CABLING SHALL MET THE REQUIREMENTS OF APPLICABLE STANDARDS (E.G., ANSI/TIA-568.2 ANSI/TIA-568.3, ISO/IEC 11801-1). ALL CONNECTORS SHALL BE SELECTED AND PROTECTED AS APPROPRIATE FOR THE ENVIRONMENTAL (E.G., PLENUM SPACE,
18. FOR PASSIVE DAS DISTRIBUTION SYSTEMS, INSTALLATION PROCEDURES SHALL CAREFULLY FOLLOW THE MANUFACTURER'INSTRUCTIONS TO ENSURE A HIGH-QUALITY INSTALLATION WITH MINIMUM PIM.
19. INSTALLED SYSTEMS SHALL BE TESTED WITH A PIM TESTER. ANY DEFECTS FOUND SHALL BE CORRECTED AND THE SYSTEM RETESTED.

TECHNOLOGY ABBREVIATIONS

AC	ALTERNATING CURRENT	(N)	NEW
AHJ	AUTHORITY HAVING JURISDICTION	NET	NETWORK SWITCH
BDA	BIDIRECTIONAL AMPLIFIER	NIC	NOT IN CONTRACT
BIM	BUILDING INFORMATION MODELING	PIM	PASSIVE INTERMODULATION
BTS	BASE TRANSCEIVER STATION	POE	POWER OVER ETHERNET
CBRS	CITIZEN BROADBAND RADIO SERVICE	PR	PAIR AS IN COPPER PAIR (CATEGORY 5)
CX	COAXIAL CABLE	PTP	POINT TO POINT
CM	CABLE MANAGEMENT	R	RADIUS
CW	CONTINUOUS WAVE	RF	RADIO FREQUENCY
COPP	COPPER PATCH PANEL	RFI	RADIO FREQUENCY INTERFERENCE
DAS	DISTRIBUTED ANTENNA SYSTEM	SMF	SINGLE MODE FIBER
DC	DIRECT CURRENT	SNMP	SIMPLE NETWORK MANAGEMENT PROTOCOL
(E)	EXISTING	STP	SHIELDED TWISTED PAIR, 22 AWG
EIRP	EFFECTIVE ISOTROPIC RADIATED POWER	TR	TELECOMMUNICATIONS ROOM
EMI	ELECTROMAGNETIC INTERFERENCE	UHF	ULTRA HIGH FREQUENCY
ER	EQUIPMENT ROOM	UMTS	UNIVERSAL MOBILE TELECOMMUNICATIONS SYSTEM
ERP	EFFECTIVE RADIATED POWER	UTP	UNSHIELDED TWISTED PAIR
FOPP	FIBER OPTIC PATCH PANEL	UTP	UNSHIELDED TWISTED PAIR
GC	GENERAL CONTRACTOR	VHF	VERY HIGH FREQUENCY
ICT	INFORMATION AND COMMUNICATION TECHNOLOGY	VSWR	VOLTAGE STANDING WAVE RATIO
LEC	LOCAL EXCHANGE CARRIER	WAN	WIDE AREA NETWORK
LMR	LAND MOBILE RADIO	WLAN	WIRELESS LOCAL AREA NETWORK
LTE	LONG TERM EVOLUTION	WSP	WIRELESS SERVICE PROVIDER
MCU	MASTER CONTROL UNIT		
MIMO	MULTIPLE INPUT/MULTIPLE OUTPUT (ANTENNA)		
MMF	MULTIMODE FIBER		

DEVICE DESIGNATION KEY

1. 2. 3

ZONE NUMBER — ANTENNA NUMBER — REMOTE UNIT NUMBER

CONDUIT DESIGNATION KEY

(2) 1" C

QUANTITY OF CONDUITS (IF MORE THAN 1) — CONDUIT — CONDUIT SIZE (MINIMUM)

TECHNOLOGY EQUIPMENT SYMBOLS LIST

SYMBOL	DESCRIPTION
DAS	DISTRIBUTED ANTENNA SYSTEM
HDMI-R	HDMI RECEIVER
HDMI-T	HDMI TRANSMITTER
FOPP	FIBER OPTIC PATCH PANEL
FOT	FIBER OPTIC TRANSMITTER
FOR	FIBER OPTIC RECEIVER
CPP	COPPER PATCH PANEL
PH X	PHONE WHERE "X" IS: C - CONFERENCE PHONE D - DESK PHONE S - SOFT PHONE (NON PHYSICAL PHONE: USES LICENSE)
HH	HAND HOLE
IPTV	INTERNET PROTOCOL TV
MH	MAINTENANCE HOLE "MANHOLE"
NS O	NETWORK SWITCH (OWNER)
NS T	NETWORK SWITCH (TENANT)
PB	PULL BOX
P	OSP COPPER PROTECTOR
X	X-CAT6 TERMINATION JACK WHERE X REPRESENTS QUANTITY OF CAT6 CABLES. FIELD COORDINATE EXACT PLACEMENT WITH OTHER TRADE.
4	EXAMPLE: 4-CAT6 WITH 4-PORT WALL PLATE. 15" A.F.F. PROVIDE PATCH CORD FOR EACH CONNECTED PORT.
TV	TV OUTLET (1 RG-6 CABLE)
A/V	HDMI WITH 2 AUDIO JACKS. INCLUDE PLENUM HDMI AND 2 AUDIO CABLE FROM JACK TO A/V SOURCE WITHIN ROOM.
W	1 CAT 6 WITH PLATE FOR WALL MOUNTED PHONE, 45"A.F.F.
B	BLANK WALL PLATE
X	X CAT 6 CABLE (FLOOR OUTLET) WHERE X REPRESENTS QUANTITY OF CAT6 CABLES.
X	X CAT 6 CABLE (CEILING OUTLET)
AW	ALL WEATHER OUTDOOR PHONE, 1 CAT 6
FDLU	FIBER DISTRIBUTION LOCAL UNIT
FDRU	FIBER DISTRIBUTION REMOTE UNIT
SVR	CBRS SERVER
SP	SPLITTER
MX	MULTIPLEXER
T	TERMINATOR
TAP	PASSIVE TAP/SPLITTER/COMBINER/PLEXOR
PC1	PC TYPE 1
PC2	PC TYPE 2

TECHNOLOGY EQUIPMENT SYMBOLS LIST

SYMBOL	DESCRIPTION
	CONDUIT TURNING UP
	CONDUIT TURNING DOWN
	TERMINATING CONDUIT. PROVIDE GROUND LUG AND INSULATED THROAT BUSHING.
	EXPOSED CONDUIT
	CONCEALED CONDUIT
	ARIEL CABLE
FPC	FLIGHT INFORMATION DISPLAY PC
HCM	HORIZONTAL CABLE MANAGEMENT
JB	JUNCTION BOX
EX	ETHERNET EXTENDER
REC	REMOTE EQUIPMENT ENCLOSURE
WAP	WIRELESS ACCESS POINT, 2 CAT 6A CABLES
COAX TYPE 1	COXIAL CABLE TYPE 1

RESPONSIBILITY MATRIX					
SCOPE ITEM	RESPONSIBILITY				NOTES
AV - DIVISION 27	**OFOI**	**CFCI**	**OFCI**	**CFOI**	
AUDIO DISTRIBUTION SYSTEM - CONFERENCE SPACE		X			
AUDIO DISTRIBUTION SYSTEM - SPECIAL VENUE		X			
BUILDING INTERCOM / PA		X			
DIGITAL SIGNAGE		X			
FLAT PANEL DISPLAY MOUNTS		X			
FLAT PANEL DISPLAYS		X			
INTERACTIVE DISPLAY MOUNTS		X			
INTERACTIVE DISPLAYS		X			
POWERED PROJECTION SCREENS		X			
PROJECTOR MOUNTS		X			
PROJECTORS		X			
VIDEO DISTRIBUTION SYSTEM - CONFERENCE SPACE		X			
VIDEO DISTRIBUTION SYSTEM - SPECIAL VENUE		X			
NETWORK, SERVER, PC EQUIPMENT - DIVISION 27	**OFOI**	**CFCI**	**OFCI**	**CFOI**	
CATEGORY 6/6A STRUCTURED CABLING SYSTEM		X			
DATA CENTER NETWORK EQUIPMENT		X			
SERVERS	X				3
RACEWAY: CONDUIT, BACK BOXES, SLEEVES, CABLE TRAY, ETC.		X			
UNITERRUPTABLE POWER SUPPLIES (UPS)		X			
OFFICE PC's	X				3
VOIP TELEPHONES	X				3
WIRELESS ACCESS POINT		X			
LIFE SAFETY - DIVISION 27	**OFOI**	**CFCI**	**OFCI**	**CFOI**	
DISTRIBUTED ANTENNA PATHWAY (COMMERCIAL)		X			2
DISTRIBUTED ANTENNA SYSTEM (PUBLIC SAFETY)		X			5
RACEWAY: CONDUIT, BACK BOXES, SLEEVES, CABLE TRAY, ETC.		X			2
SECURITY - DIVISION 28	**OFOI**	**CFCI**	**OFCI**	**CFOI**	
ACCESS CONTROL SYSTEM (ACS)		X			
DOOR ACCESS VIDEO INTERCOM SYSTEM		X			
INTRUSION DETECTION SYSTEM (IDS)		X			
VIDEO SURVEILLANCE SYSTEM (VSS) - DIVISION 28	**OFOI**	**CFCI**	**OFCI**	**CFOI**	
RACEWAY: CONDUIT, BACK BOXES, SLEEVES, CABLE TRAY, ETC.		X			2
VSS CABLING		X			
VSS CAMERAS		X			
VSS PROGRAMMING		X			
VSS SERVERS		X			

Legend					
OFOI: OWNER FURNISHED OWNER INSTALLED	X				
CFCI: CONTRACTOR FURNISHED CONTRACTOR INSTALLED		X			
OFCI: OWNER FURNISHED CONTRACTOR INSTALLED			X		
CFOI: CONTRACTOR FURNISHED OWNER INSTALLED				X	

Responsibility Matrix Notes:	NOTE:
1. NONE IN PROJECT.	1
2. BY DIVISION 26 - ELECTRICAL.	2
3. CURRENTLY NOT IN SCOPE.	3
4. TBD.	4
4. DELAGATED DESIGN.	5

SHEET INDEX

FSGROUP®
ARCHITECTS
16575 Village Drive
Houston Texas 77040
713 344 1752 PH
fsdesignbuild.com

PROJECT NAME

INFORMATION TECHNOLGY BUILDING
EUGENE HEIMANN CIRCLE
FORT BEND COUNTY . RICHMOND . TEXAS

CONSULTANTS

PGA
ENGINEERS, INC
3838 N Sam Houston Pkwy E,
Suite 550
Houston, TX 77032
346.570.2418
pgaengineers.com
TBPE FIRM #12493

PROFESSIONAL SEAL

STATE OF TEXAS
JOHN GRUENWALD
100039
LICENSED
PROFESSIONAL ENGINEER
05/15/2024

ISSUED FOR

ISSUED FOR PROPOSALS AND PERMIT

REVISIONS

No.	DESCRIPTION	DATE

KEY PLAN

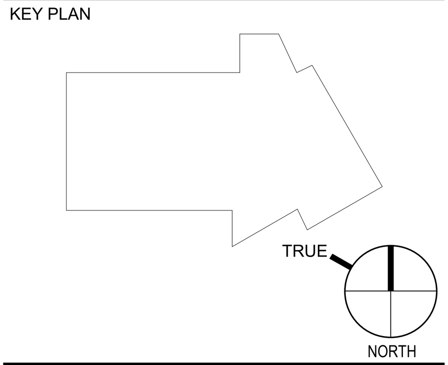

SHEET TITLE

TELECOMMUNICATIONS - LEGEND AND NOTES

SCALE

DATE 05/15/2024

PROJECT NUMBER 2319

SHEET NUMBER

T-000

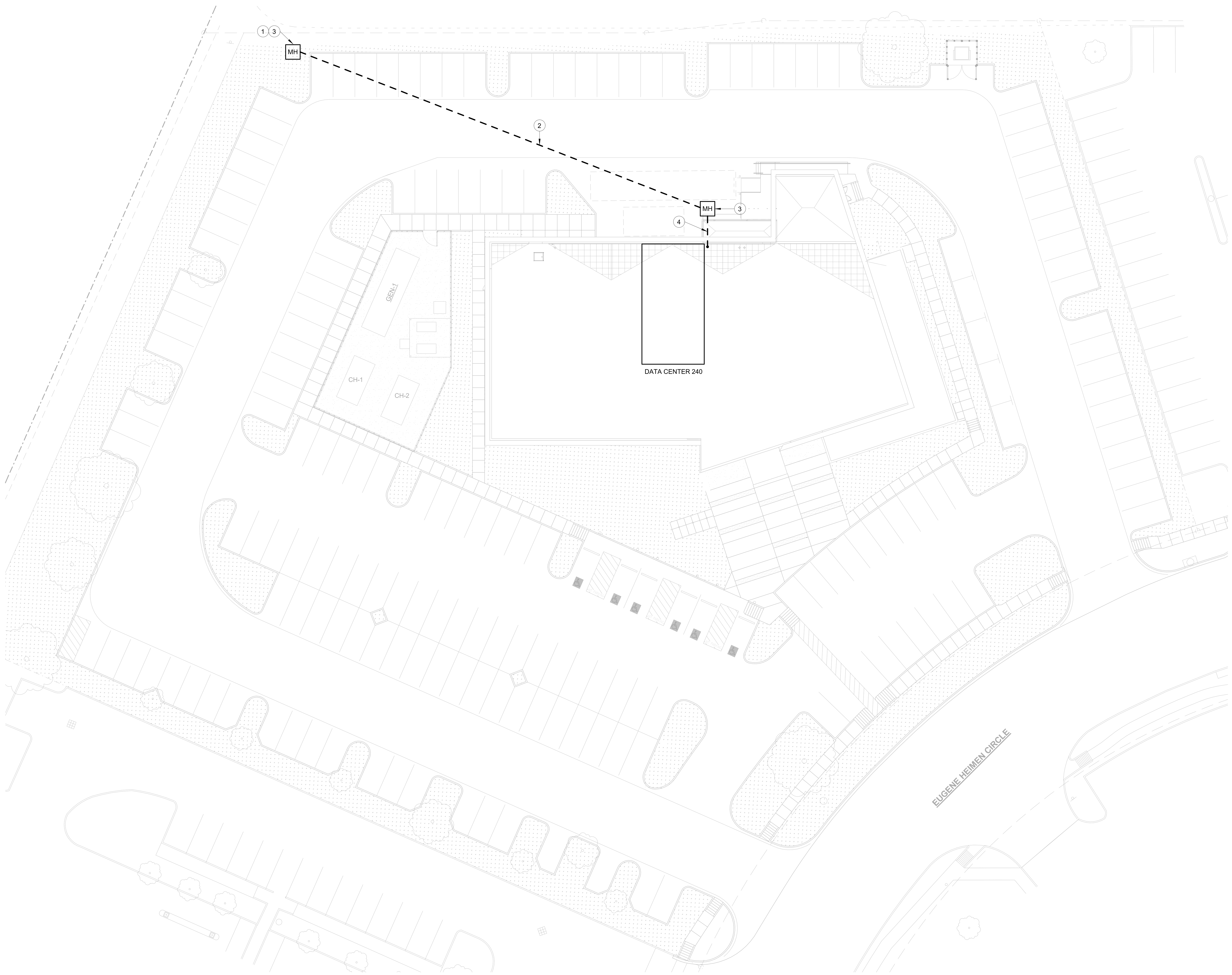

E1 TELECOM - SITE PLAN
1" = 20'-0"

GENERAL NOTES:

1. REFER TO GENERAL NOTES, SYMBOLS, AND ABBREVIATIONS SHEETS FOR ADDITIONAL INFORMATION.
2. COORDINATE EQUIPMENT INSTALLATION INSIDE IDF ROOMS WITH IT PROJECT MANAGER.
3. ALL LOW VOLTAGE CABLING SHALL BE INSTALLED IN ACCORDANCE WITH DIVISION 27 SPECIFICATIONS.

KEYED NOTES:

1 GENERAL CONTRACTOR SHALL COORDINATE AND VERIFY EXACT LOCATION FOR TELECOM "MEET ME" MANHOLE WITH UTILITY PROVIDER.

2 (2) - 4" CONDUIT EACH W/ (3) 3 - CELL MESH INNDERDUCTRS TO TELECOM MANHOLE

3 36" X 36" X 48"D MAINTENANCE HOLE.

4 (2) - 4" CONDUIT FROM MANHOLE SHALL SWEEP UNDER MECHANICAL ROOM 107 AND RISER/STUB IN TO DATA CENTER ROOM 240 FOR TELECOMMUNICATION SERVICE. CONDUITS SHALL BE LONG RADIUS SWEEPING BEND (MIN. 40").

FSGROUP®
ARCHITECTS
16575 Village Drive
Houston Texas 77040
713 344 1752 PH
fsdesignbuild.com

PROJECT NAME

THE STATE OF TEXAS
FORT BEND COUNTY

INFORMATION TECHNOLGY BUILDING
EUGENE HEIMANN CIRCLE
FORT BEND COUNTY . RICHMOND . TEXAS

CONSULTANTS

PGA
ENGINEERS, INC
3838 N Sam Houston Pkwy E,
Suite 550
Houston, TX 77032
346.570.2418
pgaengineers.com
TBPE FIRM #12493

PROFESSIONAL SEAL

STATE OF TEXAS
JOHN GRUENWALD
100039
LICENSED
PROFESSIONAL ENGINEER
05/15/2024

ISSUED FOR

ISSUED FOR PROPOSALS AND PERMIT

REVISIONS

No.	DESCRIPTION	DATE

KEY PLAN

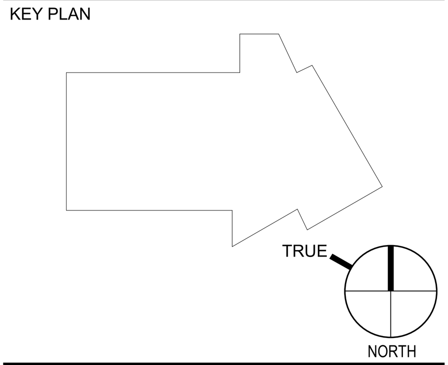

SHEET TITLE

TELECOMMUNICATIONS - SITE PLAN

SCALE
1" = 20'-0"

DATE
05/15/2024

PROJECT NUMBER
2319

SHEET NUMBER

T-100

GENERAL NOTES:

1. REFER TO GENERAL NOTES, SYMBOLS, AND ABBREVIATIONS SHEETS FOR ADDITIONAL INFORMATION.
2. COORDINATE EQUIPMENT INSTALLATION INSIDE IDF ROOMS WITH IT PROJECT MANAGER.
3. ALL LOW VOLTAGE CABLING SHALL BE INSTALLED IN ACCORDANCE WITH DIVISION 27 SPECIFICATIONS.

KEYED NOTES:

1. COORDINATE WITH OTHER TRADES FOR CONDUIT, CABLETRAY, AND J-HOOK INSTALLATION IN PLENUM SPACE. BOND CONDUIT AND TRAY AS REQUIRED.
2. COORDINATE WITH TRADE CONTRACTOR FOR EXACT LOCATION.
3. COORDINATE LOW VOLTAGE FEED WITH FURNITURE VENDOR PRIOR TO CONSTRUCTION.
4. DATA FOR A/V COORDINATE HEIGHT.

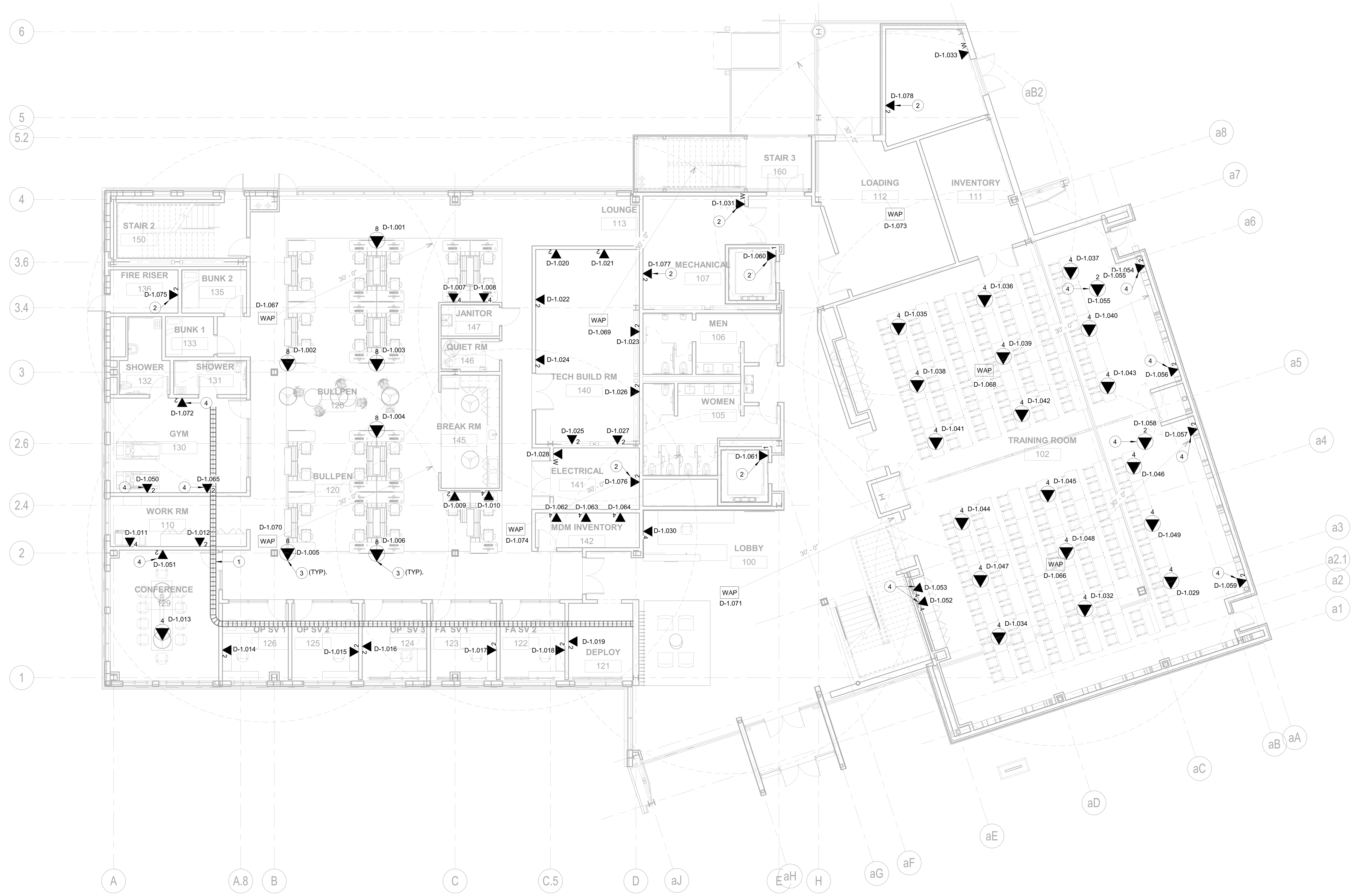

E1 TELECOM - FLOOR PLAN - LEVEL 1
1/8" = 1'-0"

FSGROUP® ARCHITECTS
16575 Village Drive
Houston Texas 77040
713 344 1752 PH
fsdesignbuild.com

PROJECT NAME

THE STATE OF TEXAS · FORT BEND COUNTY

INFORMATION TECHNOLGY BUILDING
EUGENE HEIMANN CIRCLE
FORT BEND COUNTY . RICHMOND . TEXAS

CONSULTANTS

PGA ENGINEERS, INC
3838 N Sam Houston Pkwy E,
Suite 550
Houston, TX 77032
346.570.2418
pgaengineers.com
TBPE FIRM #12493

PROFESSIONAL SEAL

STATE OF TEXAS
JOHN GRUENWALD
100039
LICENSED PROFESSIONAL ENGINEER
05/15/2024

ISSUED FOR

ISSUED FOR PROPOSALS AND PERMIT

REVISIONS

No.	DESCRIPTION	DATE

KEY PLAN

TRUE NORTH

SHEET TITLE

TELECOMMUNICATIONS - FLOOR PLAN - LEVEL 1

SCALE 1/8" = 1'-0"

DATE 05/15/2024

PROJECT NUMBER 2319

SHEET NUMBER

T-101

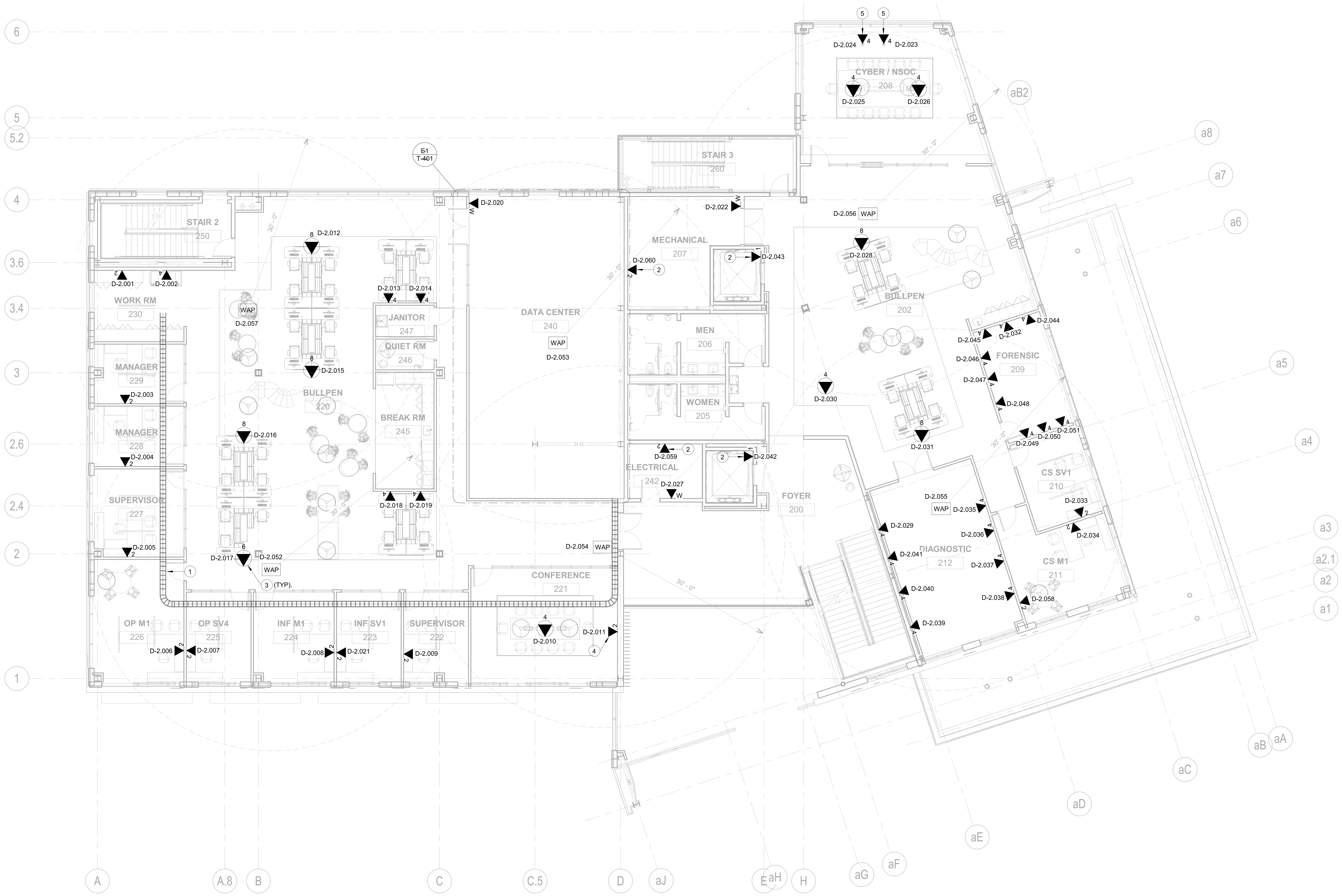

E1 TELECOM - FLOOR PLAN - LEVEL 2
1/8" = 1'-0"

GENERAL NOTES:

1. REFER TO GENERAL NOTES, SYMBOLS, AND ABBREVIATIONS SHEETS FOR ADDITIONAL INFORMATION.
2. COORDINATE EQUIPMENT INSTALLATION INSIDE IDF ROOMS WITH IT PROJECT MANAGER.
3. ALL LOW VOLTAGE CABLING SHALL BE INSTALLED IN ACCORDANCE WITH DIVISION 27 SPECIFICATIONS.

KEYED NOTES:

1 COORDINATE WITH OTHER TRADES FOR CONDUIT, CABLETRAY, AND J-HOOK INSTALLATION IN PLENUM SPACE. BOND CONDUIT AND TRAY AS REQUIRED.

2 COORDINATE WITH TRADE CONTRACTOR FOR EXACT LOCATION.

3 COORDINATE LOW VOLTAGE FEED WITH FURNITURE VENDOR PRIOR TO CONSTRUCTION.

4 DATA FOR A/V COORDINATE HEIGHT.

5 DATA FOR CEILING DISPLAYS. COORDINATE EXACT LOCATION.

FSGROUP ARCHITECTS
16575 Village Drive
Houston Texas 77040
713 344 1752 PH
fsdesignbuild.com

PROJECT NAME

THE STATE OF TEXAS · FORT BEND COUNTY

INFORMATION TECHNOLGY BUILDING
EUGENE HEIMANN CIRCLE
FORT BEND COUNTY . RICHMOND . TEXAS

CONSULTANTS

PGA ENGINEERS, INC
3838 N Sam Houston Pkwy E,
Suite 550
Houston, TX 77032
346.570.2418
pgaengineers.com
TBPE FIRM #12493

PROFESSIONAL SEAL

STATE OF TEXAS
JOHN GRUENWALD
100039
LICENSED PROFESSIONAL ENGINEER
05/15/2024

ISSUED FOR

ISSUED FOR PROPOSALS AND PERMIT

REVISIONS

No.	DESCRIPTION	DATE

KEY PLAN

TRUE
NORTH

SHEET TITLE

TELECOMMUNICATIONS - FLOOR PLAN - LEVEL 2

SCALE	1/8" = 1'-0"
DATE	05/15/2024
PROJECT NUMBER	2319

SHEET NUMBER

T-102

GENERAL NOTES:

1. REFER TO GENERAL NOTES, SYMBOLS, AND ABBREVIATIONS SHEETS FOR ADDITIONAL INFORMATION.
2. COORDINATE EQUIPMENT INSTALLATION INSIDE IDF ROOMS WITH IT PROJECT MANAGER.
3. ALL LOW VOLTAGE CABLING SHALL BE INSTALLED IN ACCORDANCE WITH DIVISION 27 SPECIFICATIONS.

KEYED NOTES:

1. COORDINATE WITH OTHER TRADES FOR CONDUIT, CABLETRAY, AND J-HOOK INSTALLATION IN PLENUM SPACE. BOND CONDUIT AND TRAY AS REQUIRED.
2. COORDINATE WITH TRADE CONTRACTOR FOR EXACT LOCATION.
3. COORDINATE LOW VOLTAGE FEED WITH FURNITURE VENDOR PRIOR TO CONSTRUCTION.
4. DATA FOR A/V COORDINATE HEIGHT.

E1 TELECOM - FLOOR PLAN - LEVEL 3
1/8" = 1'-0"

FSGROUP®
ARCHITECTS
16575 Village Drive
Houston Texas 77040
713 344 1752 PH
fsdesignbuild.com

PROJECT NAME

INFORMATION TECHNOLGY BUILDING
EUGENE HEIMANN CIRCLE
FORT BEND COUNTY . RICHMOND . TEXAS

CONSULTANTS

PGA
ENGINEERS, INC
3838 N Sam Houston Pkwy E,
Suite 550
Houston, TX 77032
346.570.2418
pgaengineers.com
TBPE FIRM #12493

PROFESSIONAL SEAL

JOHN GRUENWALD
100039
LICENSED PROFESSIONAL ENGINEER
05/15/2024

ISSUED FOR

ISSUED FOR PROPOSALS AND PERMIT

REVISIONS

No.	DESCRIPTION	DATE

KEY PLAN

TRUE NORTH

SHEET TITLE

TELECOMMUNICATIONS - FLOOR PLAN - LEVEL 3

SCALE 1/8" = 1'-0"

DATE 05/15/2024

PROJECT NUMBER 2319

SHEET NUMBER

T-103

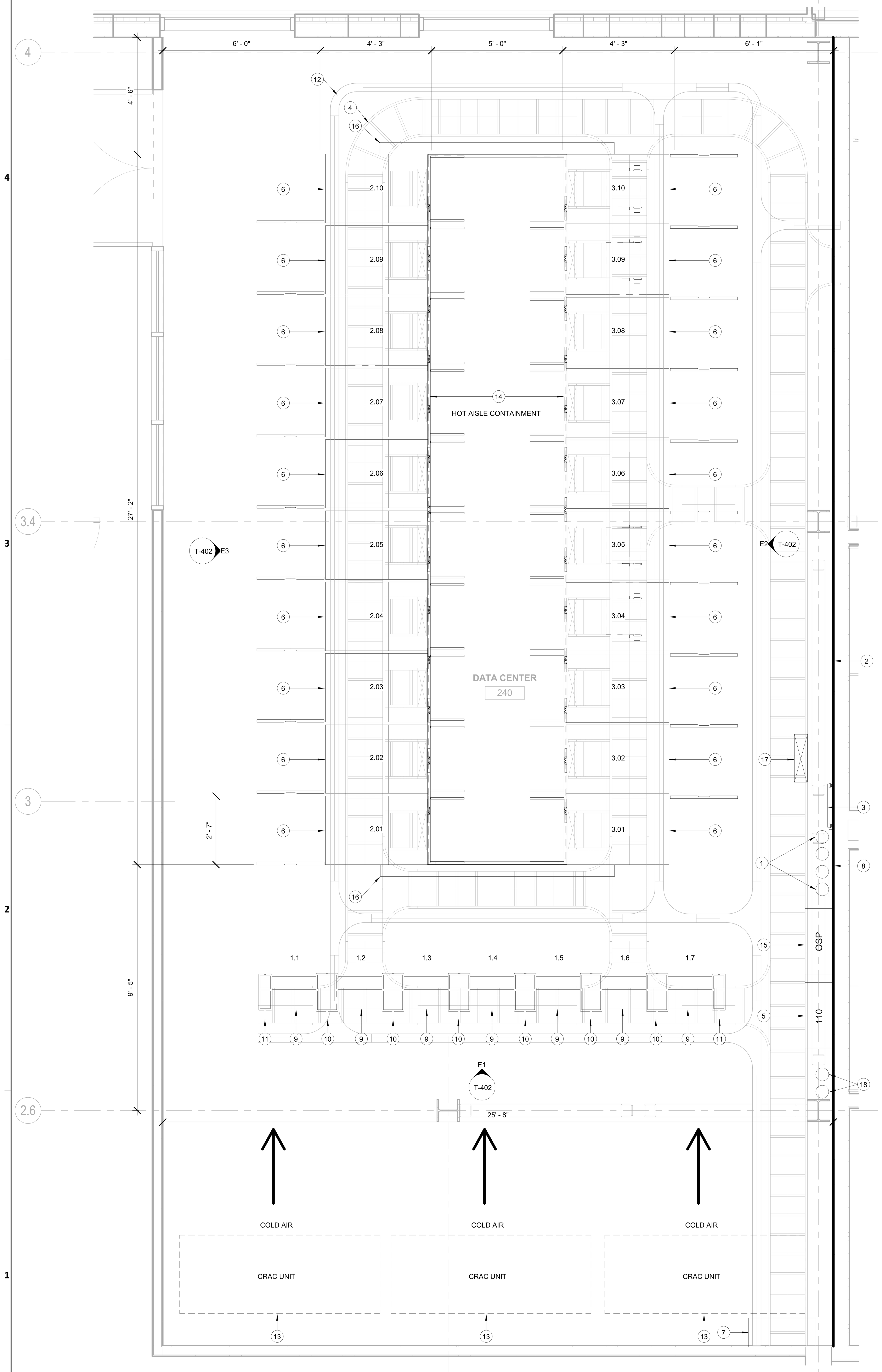

E1 TELECOM - ENLARGED PLAN - DATA CENTER 240 OPTION 1
1/2" = 1'-0"

GENERAL NOTES:

1. REFER TO GENERAL NOTES, SYMBOLS, AND ABBREVIATIONS SHEETS FOR ADDITIONAL INFORMATION.
2. COORDINATE EQUIPMENT INSTALLATION INSIDE IDF ROOMS WITH IT PROJECT MANAGER.
3. ALL LOW VOLTAGE CABLING SHALL BE INSTALLED IN ACCORDANCE WITH DIVISION 27 SPECIFICATIONS.
4. SEAL FLOOR WITH TWO COATS OF EPOXY RESIN. ONCE PRIOR TO INSTALLING EQUIPMENT, AND ONCE AFTER ROOM IS COMPLETE. SUBMIT PRODUCT DATA TO ARCHITECT FOR REVIEW AND APPROVAL PRIOR TO PROCUREMENT.

KEYED NOTES:

1 ENTRANCE CONDUITS STUBED FROM MECHANICAL ROOM SIDE OVERHEAD. INCLUDE INSULATED BUSHING WITH GROUNDING LUG. BOND TO TMGB/TGB AND SEAL WITH FIRESTOP WHEN RISER.

2 8' PLYWOOD BACKBOARD ON EAST WALL ONLY, END TO END. PAINT WITH FIRE RETARDANT PAINT.

3 TELECOMMUNICATION MAIN GROUND BUSBAR (TMGB). BOND TO MAINS GROUND VIA #2 GROUND CONDUCTOR IN 1.5"C. MOUNT AT 6' AFF.

4 18" X 4" WIRE MESH CABLE TRAY.

5 25 PAIR COPPER PATCH PANNEL. 110 TYPE.

6 SERVER CABINET. 45RU X 800MM (31.5") WIDE X 1200MM (48") DEEP.

7 CABLE TRAY SLOT BETWEEN ROOMS. SEAL WITH APPROVED FIRE STOP.

8 VERTICLE CABLE LADDER, 18"W.

9 2-POST RACK. 45RU X 510mm (20") WIDE X 380MM (15") DEEP.

10 10" VERTICAL CABLE MANAGER.

11 6" VERTICAL CABLE MANAGER.

12 4" X 4" FIBER TROUGH RACEWAY.

13 CRAC UNIT BY MECHANICAL.

14 HOT AISL CABINET CONTAINMENT ENCLOSURE. REFERENCE BOM ON SHEET T-501.

15 TELECOM ENTRANCE CABLE PROTECTOR PANEL AND TRANSITION SPLICE. BOND TO TMGB.

16 CONTAINMENT AISLE SLIDING DOOR. REFERENCE BOM ON SHEET T-501.

17 CEILING AND FLOOR CABLE TRAY SLOT BETWEEN FIRST AND THIRD FLOOR. SEAL WITH APPROVED FIRE STOP.

18 (2) 2"C. TO ROOF FOR FUTURE CELLULAR DAS. SEAL CONDUITS ON ROOF WITH APPROVED. WATER SEAL. COORDINATE WITH ROOFING CONTRACTOR. BOND TO TMGB.

FSGROUP®
ARCHITECTS
16575 Village Drive
Houston Texas 77040
713 344 1752 PH
fsdesignbuild.com

PROJECT NAME

INFORMATION TECHNOLGY BUILDING
EUGENE HEIMANN CIRCLE
FORT BEND COUNTY . RICHMOND . TEXAS

CONSULTANTS

PGA
ENGINEERS, INC
3838 N Sam Houston Pkwy E,
Suite 550
Houston, TX 77032
346.570.2418
pgaengineers.com
TBPE FIRM #12493

PROFESSIONAL SEAL

STATE OF TEXAS
JOHN GRUENWALD
100039
LICENSED
PROFESSIONAL ENGINEER
05/15/2024

ISSUED FOR

ISSUED FOR PROPOSALS AND PERMIT

REVISIONS

No.	DESCRIPTION	DATE

KEY PLAN

TRUE NORTH

SHEET TITLE

TELECOMMUNICATIONS - ENLARGED PLAN - DATA CENTER 240

SCALE 1/2" = 1'-0"

DATE 05/15/2024

PROJECT NUMBER 2319

SHEET NUMBER

T-401

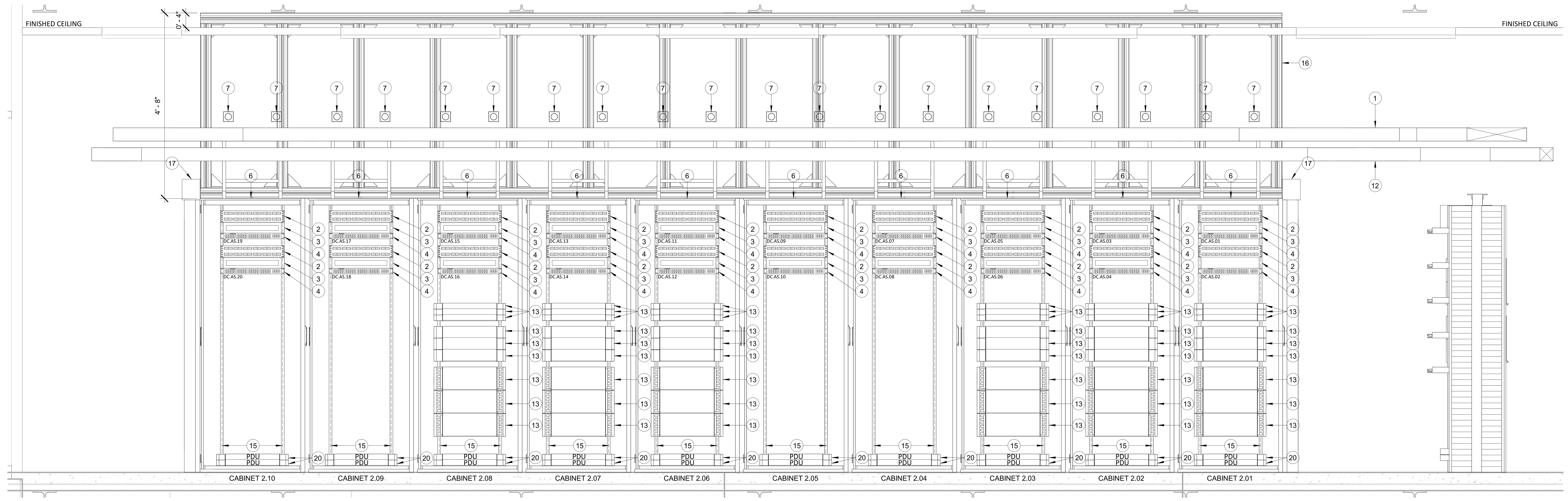

E3 EAST DATA CENTER 240 ELEVATION
3/4" = 1'-0"

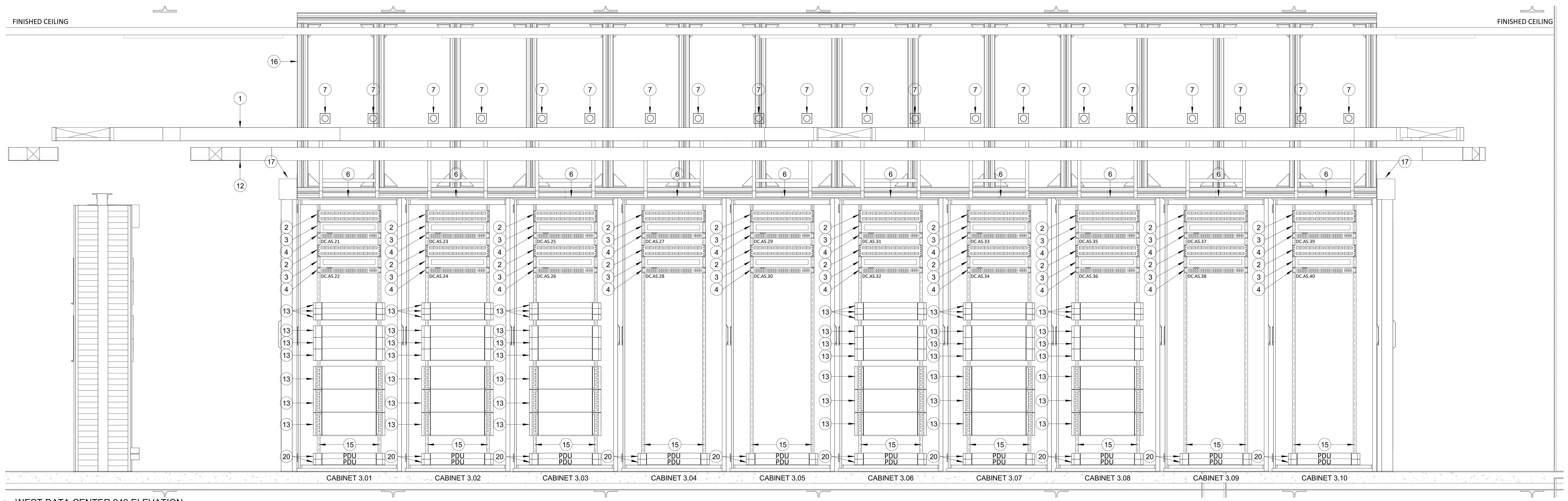

E2 WEST DATA CENTER 240 ELEVATION
3/4" = 1'-0"

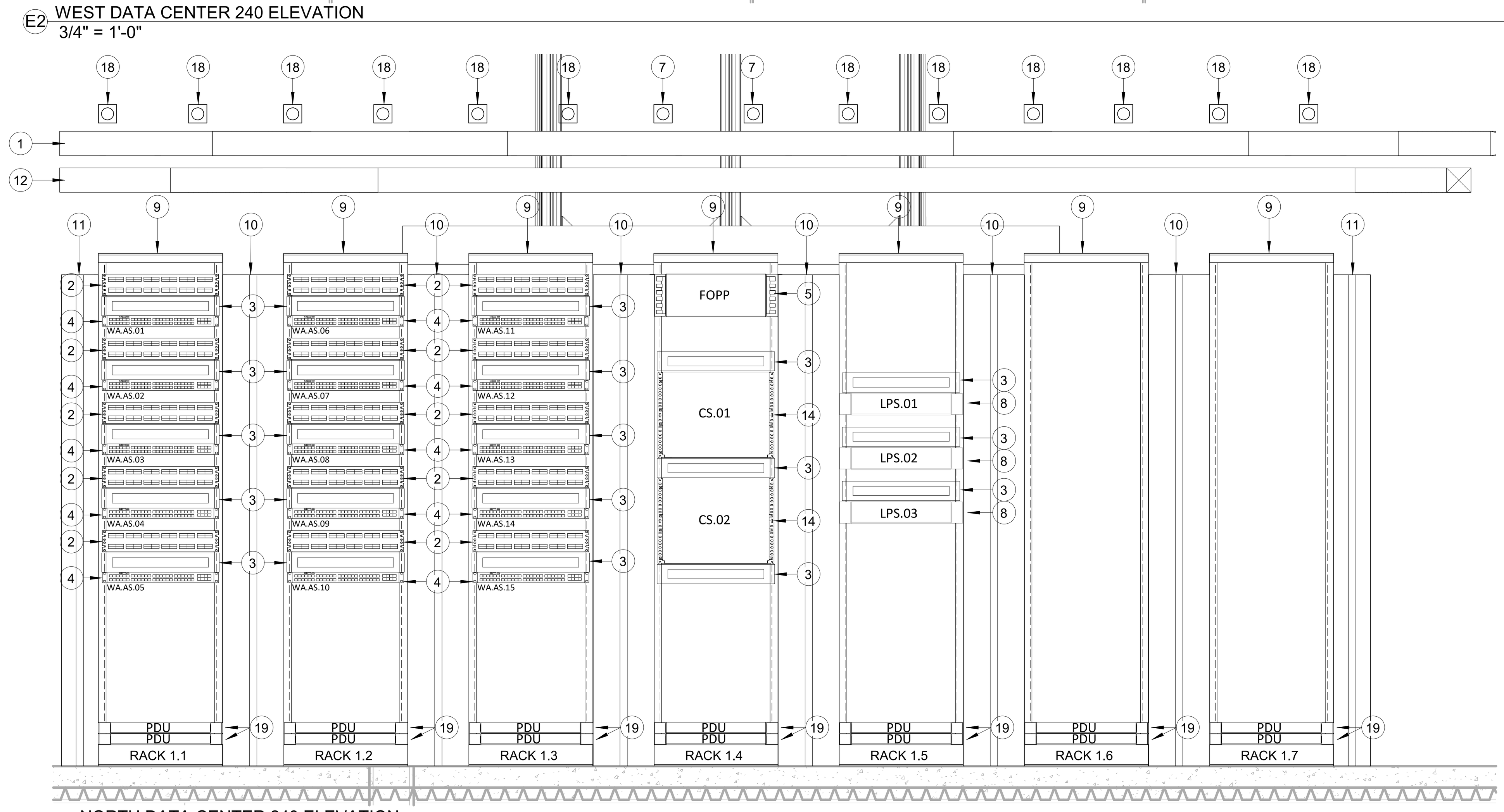

E1 NORTH DATA CENTER 240 ELEVATION
3/4" = 1'-0"

GENERAL NOTES:

1. REFER TO GENERAL NOTES, SYMBOLS, AND ABBREVIATIONS SHEETS FOR ADDITIONAL INFORMATION.
2. COORDINATE EQUIPMENT INSTALLATION INSIDE IDF ROOMS WITH IT PROJECT MANAGER.
3. ALL LOW VOLTAGE CABLING SHALL BE INSTALLED IN ACCORDANCE WITH DIVISION 27 SPECIFICATIONS.

KEYED NOTES:

1. 18" X 4" CABLE TRAY.
2. 48 PORT COPPER PATCH PANEL (CPP).
3. HORIZONTAL CABLE MANAGEMENT (HCM).
4. 48 PORT NETWORK ACCESS SWITCH (AS).
5. 144 PORT FIBER OPTIC PATCH PANEL.
6. SERVER CABINET. 45RU X 800MM (31.5") WIDE X 1200MM (48") DEEP.
7. 208V, 30A, 3P CIRCUIT TERMINATED IN L21-30R RECEPTACLE FASTENEND TO ELECTRICAL BUSWAY ABOVE CABINET. 2 PER RACK. REFERENCE ELECTRICAL DRAWINGS AND SPECIFICATIONS.
8. REFERENCE SHEET TY-402.
9. 2-POST RACK. 45RU X 510mm (20") WIDE X 380MM (15") DEEP. BOLT TO FLOOR.
10. 10" VERTICAL CABLE MANAGER.
11. 6" VERTICAL CABLE MANAGER.
12. 4" X 4" FIBER TROUGH RACEWAY.
13. OWNER FURNISHED AND OWNER INSTALLED SERVER EQUIPMENT.
14. DATA NETWORK CORE SWITCH 8RU (CS).
15. VERTICAL PDU. INPUT NEMA L21-30P, OUTPUT (18) C13 + (6) C19 + (3) 5-20.
16. HOT AISLE CABINET CONTAINMENT ENCLOSURE. REFERENCE BOM ON SHEET T-501.
17. CONTAINMENT AISLE SLIDING DOOR. REFERENCE BOM ON SHEET T-501.
18. 120V, 30A TERMINATED IN A L5-30R RECEPTACLE. 2 PER RACK. REFERENCE ELCTRICAL DRAWINGS AND SPECIFICATIONS.
19. HORIZONTAL PDU. INPUT NEMA L5-30P, OUTPUT (12) 5-20R.
20. HORIZONTAL PDU. INPUT NEMA 5-20P, OUTPUT (12) 5-20R

FSGROUP® ARCHITECTS
16575 Village Drive
Houston Texas 77040
713 344 1752 PH
fsdesignbuild.com

PROJECT NAME

THE STATE OF TEXAS · FORT BEND COUNTY

INFORMATION TECHNOLGY BUILDING
EUGENE HEIMANN CIRCLE
FORT BEND COUNTY . RICHMOND . TEXAS

CONSULTANTS

PGA
ENGINEERS, INC
3838 N Sam Houston Pkwy E,
Suite 550
Houston, TX 77032
346.570.2418
pgaengineers.com
TBPE FIRM #12493

PROFESSIONAL SEAL

STATE OF TEXAS
JOHN GRUENWALD
100039
LICENSED PROFESSIONAL ENGINEER
05/15/2024

ISSUED FOR

ISSUED FOR PROPOSALS AND PERMIT

REVISIONS

No.	DESCRIPTION	DATE

KEY PLAN

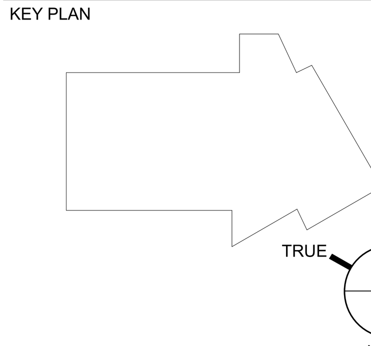

SHEET TITLE

TELECOMMUNICATIONS - ELEVATION - DATA CENTER 240

SCALE 3/4" = 1'-0"

DATE 05/15/2024

PROJECT NUMBER 2319

SHEET NUMBER

T-402

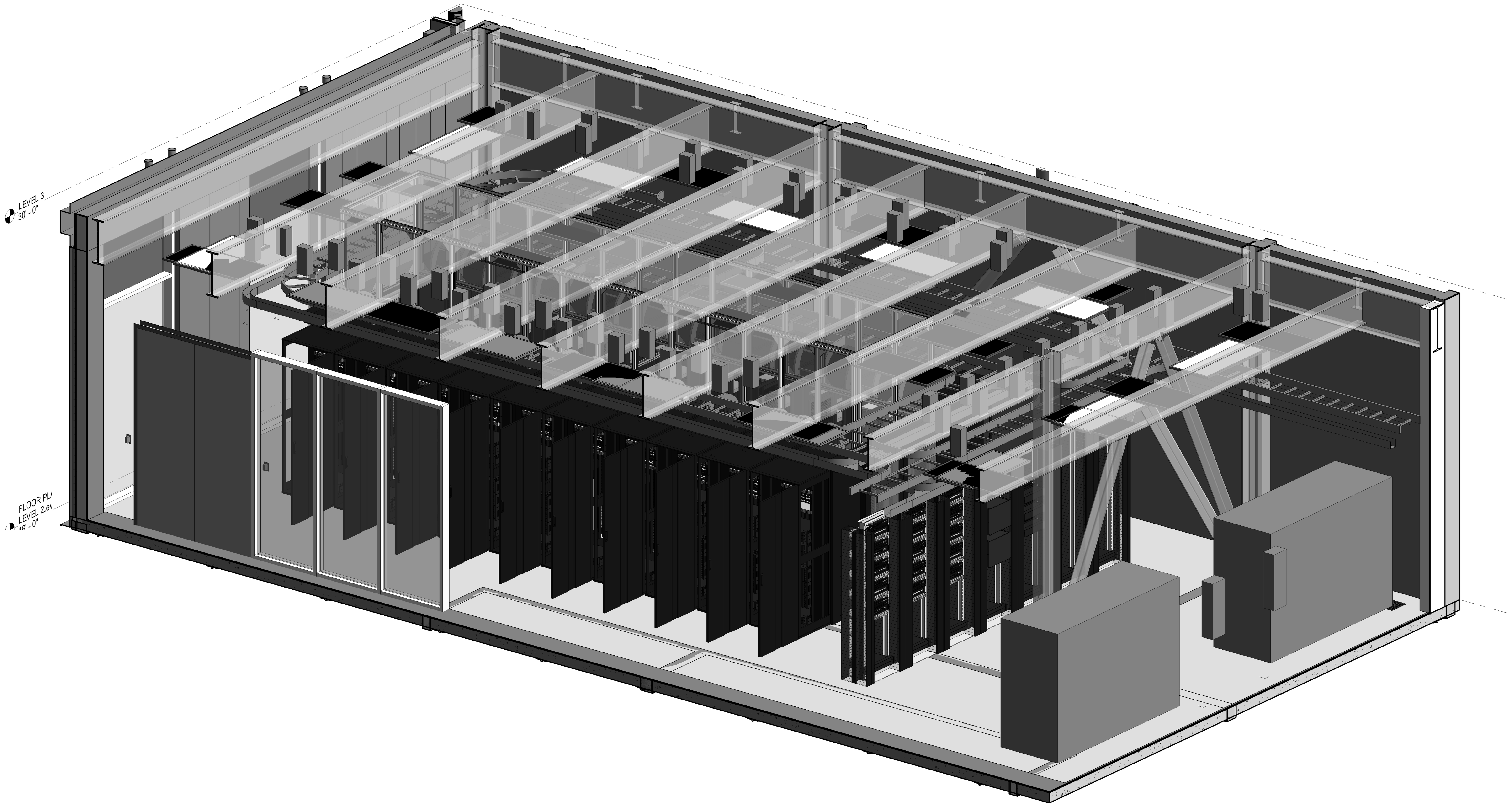

E3 TELECOM - ISOMETRIC VIEW - DATA CENTER 240

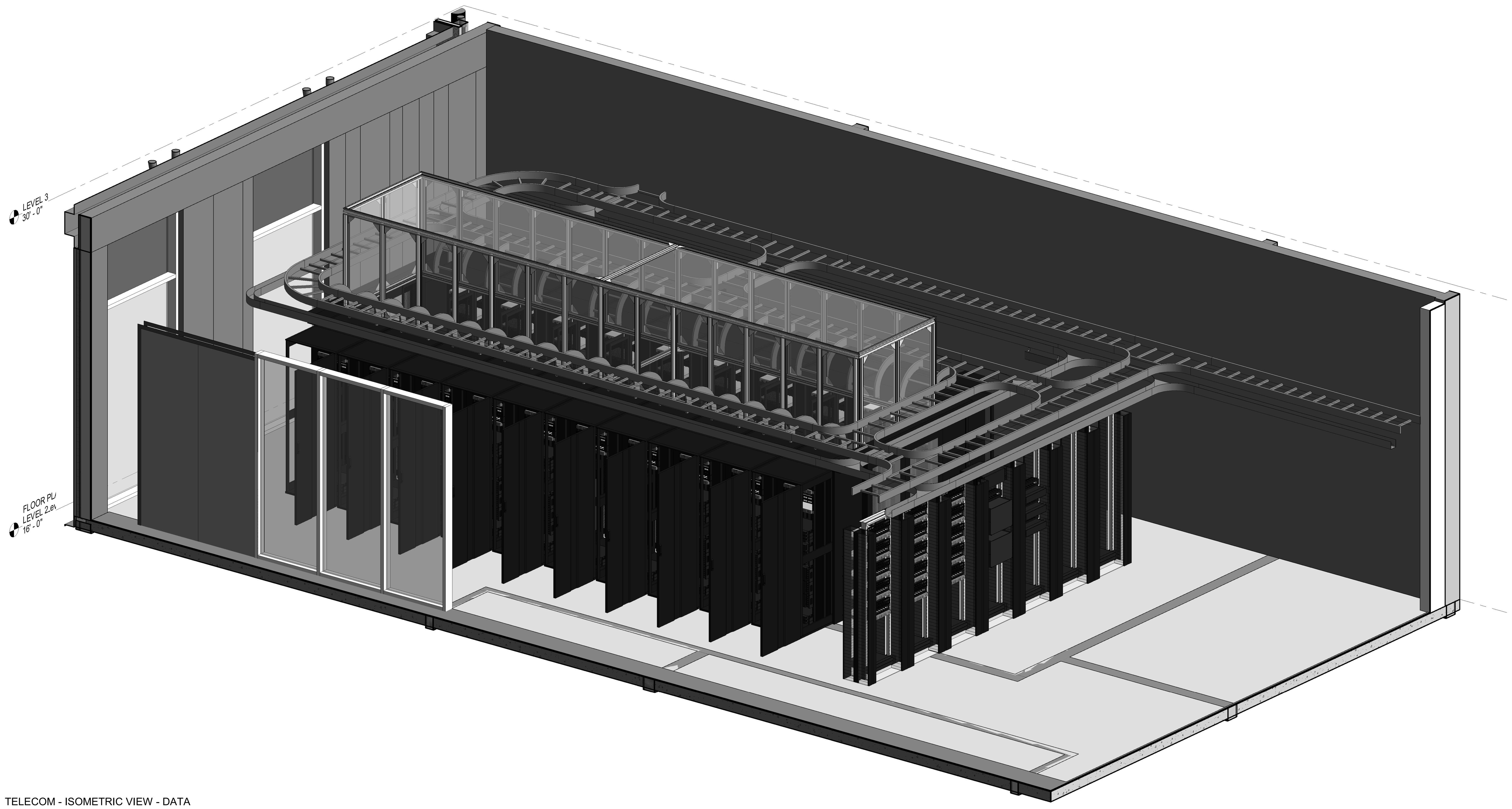

E1 TELECOM - ISOMETRIC VIEW - DATA CENTER 240 EQUIPMENT VIEW

FSGROUP®
ARCHITECTS
16575 Village Drive
Houston Texas 77040
713 344 1752 PH
fsdesignbuild.com

PROJECT NAME

THE STATE OF TEXAS FORT BEND COUNTY

INFORMATION TECHNOLGY BUILDING
EUGENE HEIMANN CIRCLE
FORT BEND COUNTY . RICHMOND . TEXAS

CONSULTANTS

PGA
ENGINEERS, INC
3838 N Sam Houston Pkwy E,
Suite 550
Houston, TX 77032
346.570.2418
pgaengineers.com
TBPE FIRM #12493

PROFESSIONAL SEAL

STATE OF TEXAS
JOHN GRUENWALD
100039
LICENSED
PROFESSIONAL ENGINEER
05/15/2024

ISSUED FOR

ISSUED FOR PROPOSALS AND PERMIT

REVISIONS

No.	DESCRIPTION	DATE

KEY PLAN

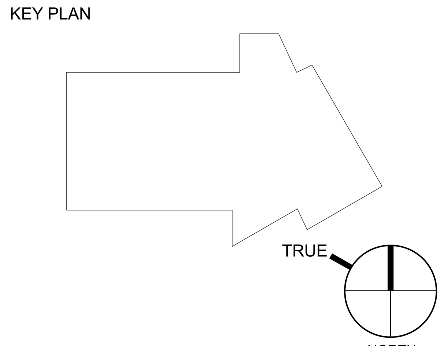

SHEET TITLE

TELECOMMUNICATIONS - ISOMETRIC - DATA CENTER 240

SCALE

DATE 05/15/2024

PROJECT NUMBER 2319

SHEET NUMBER

T-403

DATA JACK DEVICE SCHEDULE

DEVICE ID	LEVEL	CABLE COUNT	TERMINATING IDF
D-1.001	FLOOR PLAN - Level 1	8	DATA CENTER RM 240
D-1.002	FLOOR PLAN - Level 1	8	DATA CENTER RM 240
D-1.003	FLOOR PLAN - Level 1	8	DATA CENTER RM 240
D-1.004	FLOOR PLAN - Level 1	8	DATA CENTER RM 240
D-1.005	FLOOR PLAN - Level 1	8	DATA CENTER RM 240
D-1.006	FLOOR PLAN - Level 1	8	DATA CENTER RM 240
D-1.007	FLOOR PLAN - Level 1	4	DATA CENTER RM 240
D-1.008	FLOOR PLAN - Level 1	4	DATA CENTER RM 240
D-1.009	FLOOR PLAN - Level 1	2	DATA CENTER RM 240
D-1.010	FLOOR PLAN - Level 1	4	DATA CENTER RM 240
D-1.011	FLOOR PLAN - Level 1	4	DATA CENTER RM 240
D-1.012	FLOOR PLAN - Level 1	2	DATA CENTER RM 240
D-1.013	FLOOR PLAN - Level 1	4	DATA CENTER RM 240
D-1.014	FLOOR PLAN - Level 1	2	DATA CENTER RM 240
D-1.015	FLOOR PLAN - Level 1	2	DATA CENTER RM 240
D-1.016	FLOOR PLAN - Level 1	2	DATA CENTER RM 240
D-1.017	FLOOR PLAN - Level 1	2	DATA CENTER RM 240
D-1.018	FLOOR PLAN - Level 1	2	DATA CENTER RM 240
D-1.019	FLOOR PLAN - Level 1	2	DATA CENTER RM 240
D-1.020	FLOOR PLAN - Level 1	2	DATA CENTER RM 240
D-1.021	FLOOR PLAN - Level 1	2	DATA CENTER RM 240
D-1.022	FLOOR PLAN - Level 1	2	DATA CENTER RM 240
D-1.023	FLOOR PLAN - Level 1	2	DATA CENTER RM 240
D-1.024	FLOOR PLAN - Level 1	2	DATA CENTER RM 240
D-1.025	FLOOR PLAN - Level 1	2	DATA CENTER RM 240
D-1.026	FLOOR PLAN - Level 1	2	DATA CENTER RM 240
D-1.027	FLOOR PLAN - Level 1	2	DATA CENTER RM 240
D-1.028	FLOOR PLAN - Level 1	1	DATA CENTER RM 240
D-1.029	FLOOR PLAN - Level 1	4	DATA CENTER RM 240
D-1.030	FLOOR PLAN - Level 1	4	DATA CENTER RM 240
D-1.031	FLOOR PLAN - Level 1	1	DATA CENTER RM 240
D-1.032	FLOOR PLAN - Level 1	4	DATA CENTER RM 240
D-1.033	FLOOR PLAN - Level 1	1	DATA CENTER RM 240
D-1.034	FLOOR PLAN - Level 1	4	DATA CENTER RM 240
D-1.035	FLOOR PLAN - Level 1	4	DATA CENTER RM 240
D-1.036	FLOOR PLAN - Level 1	4	DATA CENTER RM 240
D-1.037	FLOOR PLAN - Level 1	4	DATA CENTER RM 240
D-1.038	FLOOR PLAN - Level 1	4	DATA CENTER RM 240
D-1.039	FLOOR PLAN - Level 1	4	DATA CENTER RM 240
D-1.040	FLOOR PLAN - Level 1	4	DATA CENTER RM 240
D-1.041	FLOOR PLAN - Level 1	4	DATA CENTER RM 240
D-1.042	FLOOR PLAN - Level 1	4	DATA CENTER RM 240
D-1.043	FLOOR PLAN - Level 1	4	DATA CENTER RM 240
D-1.044	FLOOR PLAN - Level 1	4	DATA CENTER RM 240
D-1.045	FLOOR PLAN - Level 1	4	DATA CENTER RM 240
D-1.046	FLOOR PLAN - Level 1	4	DATA CENTER RM 240
D-1.047	FLOOR PLAN - Level 1	4	DATA CENTER RM 240
D-1.048	FLOOR PLAN - Level 1	4	DATA CENTER RM 240
D-1.049	FLOOR PLAN - Level 1	4	DATA CENTER RM 240
D-1.050	FLOOR PLAN - Level 1	2	DATA CENTER RM 240
D-1.051	FLOOR PLAN - Level 1	2	DATA CENTER RM 240
D-1.052	FLOOR PLAN - Level 1	4	DATA CENTER RM 240
D-1.053	FLOOR PLAN - Level 1	4	DATA CENTER RM 240
D-1.054	FLOOR PLAN - Level 1	2	DATA CENTER RM 240
D-1.055	FLOOR PLAN - Level 1	2	DATA CENTER RM 240
D-1.056	FLOOR PLAN - Level 1	2	DATA CENTER RM 240
D-1.057	FLOOR PLAN - Level 1	2	DATA CENTER RM 240
D-1.058	FLOOR PLAN - Level 1	2	DATA CENTER RM 240
D-1.059	FLOOR PLAN - Level 1	2	DATA CENTER RM 240
D-1.060	FLOOR PLAN - Level 1	1	DATA CENTER RM 240
D-1.061	FLOOR PLAN - Level 1	1	DATA CENTER RM 240
D-1.062	FLOOR PLAN - Level 1	4	DATA CENTER RM 240
D-1.063	FLOOR PLAN - Level 1	4	DATA CENTER RM 240
D-1.064	FLOOR PLAN - Level 1	4	DATA CENTER RM 240
D-1.065	FLOOR PLAN - Level 1	2	DATA CENTER RM 240
D-1.066	FLOOR PLAN - Level 1	1	DATA CENTER RM 240
D-1.067	FLOOR PLAN - Level 1	1	DATA CENTER RM 240
D-1.068	FLOOR PLAN - Level 1	1	DATA CENTER RM 240
D-1.069	FLOOR PLAN - Level 1	1	DATA CENTER RM 240
D-1.070	FLOOR PLAN - Level 1	1	DATA CENTER RM 240
D-1.071	FLOOR PLAN - Level 1	1	DATA CENTER RM 240
D-1.072	FLOOR PLAN - Level 1	2	DATA CENTER RM 240
D-1.073	FLOOR PLAN - Level 1	1	DATA CENTER RM 240
D-1.074	FLOOR PLAN - Level 1	1	DATA CENTER RM 240
D-1.075	FLOOR PLAN - Level 1	2	DATA CENTER RM 240
D-1.076	FLOOR PLAN - Level 1	2	DATA CENTER RM 240
D-1.077	FLOOR PLAN - Level 1	2	DATA CENTER RM 240
D-1.078	FLOOR PLAN - Level 1	2	DATA CENTER RM 240
D-2.001	FLOOR PLAN - Level 2	2	DATA CENTER RM 240
D-2.002	FLOOR PLAN - Level 2	4	DATA CENTER RM 240
D-2.003	FLOOR PLAN - Level 2	2	DATA CENTER RM 240
D-2.004	FLOOR PLAN - Level 2	2	DATA CENTER RM 240
D-2.005	FLOOR PLAN - Level 2	2	DATA CENTER RM 240
D-2.006	FLOOR PLAN - Level 2	2	DATA CENTER RM 240
D-2.007	FLOOR PLAN - Level 2	2	DATA CENTER RM 240
D-2.008	FLOOR PLAN - Level 2	2	DATA CENTER RM 240
D-2.009	FLOOR PLAN - Level 2	2	DATA CENTER RM 240
D-2.010	FLOOR PLAN - Level 2	4	DATA CENTER RM 240
D-2.011	FLOOR PLAN - Level 2	2	DATA CENTER RM 240
D-2.012	FLOOR PLAN - Level 2	8	DATA CENTER RM 240
D-2.013	FLOOR PLAN - Level 2	4	DATA CENTER RM 240
D-2.014	FLOOR PLAN - Level 2	4	DATA CENTER RM 240
D-2.015	FLOOR PLAN - Level 2	8	DATA CENTER RM 240
D-2.016	FLOOR PLAN - Level 2	8	DATA CENTER RM 240
D-2.017	FLOOR PLAN - Level 2	6	DATA CENTER RM 240
D-2.018	FLOOR PLAN - Level 2	4	DATA CENTER RM 240
D-2.019	FLOOR PLAN - Level 2	4	DATA CENTER RM 240
D-2.020	FLOOR PLAN - Level 2	1	DATA CENTER RM 240

DATA JACK DEVICE SCHEDULE

DEVICE ID	LEVEL	CABLE COUNT	TERMINATING IDF
D-2.021	FLOOR PLAN - Level 2	2	DATA CENTER RM 240
D-2.022	FLOOR PLAN - Level 2	1	DATA CENTER RM 240
D-2.023	FLOOR PLAN - Level 2	4	DATA CENTER RM 240
D-2.024	FLOOR PLAN - Level 2	4	DATA CENTER RM 240
D-2.025	FLOOR PLAN - Level 2	4	DATA CENTER RM 240
D-2.026	FLOOR PLAN - Level 2	4	DATA CENTER RM 240
D-2.027	FLOOR PLAN - Level 2	1	DATA CENTER RM 240
D-2.028	FLOOR PLAN - Level 2	8	DATA CENTER RM 240
D-2.029	FLOOR PLAN - Level 2	4	DATA CENTER RM 240
D-2.030	FLOOR PLAN - Level 2	4	DATA CENTER RM 240
D-2.031	FLOOR PLAN - Level 2	8	DATA CENTER RM 240
D-2.032	FLOOR PLAN - Level 2	4	DATA CENTER RM 240
D-2.033	FLOOR PLAN - Level 2	2	DATA CENTER RM 240
D-2.034	FLOOR PLAN - Level 2	2	DATA CENTER RM 240
D-2.035	FLOOR PLAN - Level 2	4	DATA CENTER RM 240
D-2.036	FLOOR PLAN - Level 2	4	DATA CENTER RM 240
D-2.037	FLOOR PLAN - Level 2	4	DATA CENTER RM 240
D-2.038	FLOOR PLAN - Level 2	4	DATA CENTER RM 240
D-2.039	FLOOR PLAN - Level 2	4	DATA CENTER RM 240
D-2.040	FLOOR PLAN - Level 2	4	DATA CENTER RM 240
D-2.041	FLOOR PLAN - Level 2	4	DATA CENTER RM 240
D-2.042	FLOOR PLAN - Level 2	1	DATA CENTER RM 240
D-2.043	FLOOR PLAN - Level 2	1	DATA CENTER RM 240
D-2.044	FLOOR PLAN - Level 2	4	DATA CENTER RM 240
D-2.045	FLOOR PLAN - Level 2	4	DATA CENTER RM 240
D-2.046	FLOOR PLAN - Level 2	4	DATA CENTER RM 240
D-2.047	FLOOR PLAN - Level 2	4	DATA CENTER RM 240
D-2.048	FLOOR PLAN - Level 2	4	DATA CENTER RM 240
D-2.049	FLOOR PLAN - Level 2	4	DATA CENTER RM 240
D-2.050	FLOOR PLAN - Level 2	4	DATA CENTER RM 240
D-2.051	FLOOR PLAN - Level 2	4	DATA CENTER RM 240
D-2.052	FLOOR PLAN - Level 2	1	DATA CENTER RM 240
D-2.053	FLOOR PLAN - Level 2	1	DATA CENTER RM 240
D-2.054	FLOOR PLAN - Level 2	1	DATA CENTER RM 240
D-2.055	FLOOR PLAN - Level 2	1	DATA CENTER RM 240
D-2.056	FLOOR PLAN - Level 2	1	DATA CENTER RM 240
D-2.057	FLOOR PLAN - Level 2	1	DATA CENTER RM 240
D-2.058	FLOOR PLAN - Level 2	2	DATA CENTER RM 240
D-2.059	FLOOR PLAN - Level 2	2	DATA CENTER RM 240
D-2.060	FLOOR PLAN - Level 2	2	DATA CENTER RM 240
D-3.001	FLOOR PLAN - Level 3	2	DATA CENTER RM 240
D-3.002	FLOOR PLAN - Level 3	4	DATA CENTER RM 240
D-3.003	FLOOR PLAN - Level 3	2	DATA CENTER RM 240
D-3.004	FLOOR PLAN - Level 3	2	DATA CENTER RM 240
D-3.005	FLOOR PLAN - Level 3	2	DATA CENTER RM 240
D-3.006	FLOOR PLAN - Level 3	2	DATA CENTER RM 240
D-3.007	FLOOR PLAN - Level 3	2	DATA CENTER RM 240
D-3.008	FLOOR PLAN - Level 3	2	DATA CENTER RM 240
D-3.009	FLOOR PLAN - Level 3	2	DATA CENTER RM 240
D-3.010	FLOOR PLAN - Level 3	2	DATA CENTER RM 240
D-3.011	FLOOR PLAN - Level 3	2	DATA CENTER RM 240
D-3.012	FLOOR PLAN - Level 3	2	DATA CENTER RM 240
D-3.013	FLOOR PLAN - Level 3	8	DATA CENTER RM 240
D-3.014	FLOOR PLAN - Level 3	8	DATA CENTER RM 240
D-3.015	FLOOR PLAN - Level 3	4	DATA CENTER RM 240
D-3.016	FLOOR PLAN - Level 3	4	DATA CENTER RM 240
D-3.017	FLOOR PLAN - Level 3	8	DATA CENTER RM 240
D-3.018	FLOOR PLAN - Level 3	8	DATA CENTER RM 240
D-3.019	FLOOR PLAN - Level 3	8	DATA CENTER RM 240
D-3.020	FLOOR PLAN - Level 3	8	DATA CENTER RM 240
D-3.021	FLOOR PLAN - Level 3	8	DATA CENTER RM 240
D-3.022	FLOOR PLAN - Level 3	8	DATA CENTER RM 240
D-3.023	FLOOR PLAN - Level 3	4	DATA CENTER RM 240
D-3.024	FLOOR PLAN - Level 3	4	DATA CENTER RM 240
D-3.025	FLOOR PLAN - Level 3	4	DATA CENTER RM 240
D-3.026	FLOOR PLAN - Level 3	6	DATA CENTER RM 240
D-3.027	FLOOR PLAN - Level 3	8	DATA CENTER RM 240
D-3.028	FLOOR PLAN - Level 3	1	DATA CENTER RM 240
D-3.029	FLOOR PLAN - Level 3	2	DATA CENTER RM 240
D-3.030	FLOOR PLAN - Level 3	2	DATA CENTER RM 240
D-3.031	FLOOR PLAN - Level 3	1	DATA CENTER RM 240
D-3.032	FLOOR PLAN - Level 3	4	DATA CENTER RM 240
D-3.033	FLOOR PLAN - Level 3	2	DATA CENTER RM 240
D-3.034	FLOOR PLAN - Level 3	2	DATA CENTER RM 240
D-3.035	FLOOR PLAN - Level 3	2	DATA CENTER RM 240
D-3.036	FLOOR PLAN - Level 3	2	DATA CENTER RM 240
D-3.037	FLOOR PLAN - Level 3	2	DATA CENTER RM 240
D-3.038	FLOOR PLAN - Level 3	4	DATA CENTER RM 240
D-3.039	FLOOR PLAN - Level 3	4	DATA CENTER RM 240
D-3.040	FLOOR PLAN - Level 3	2	DATA CENTER RM 240
D-3.041	FLOOR PLAN - Level 3	2	DATA CENTER RM 240
D-3.042	FLOOR PLAN - Level 3	2	DATA CENTER RM 240
D-3.043	FLOOR PLAN - Level 3	2	DATA CENTER RM 240
D-3.044	FLOOR PLAN - Level 3	1	DATA CENTER RM 240
D-3.045	FLOOR PLAN - Level 3	4	DATA CENTER RM 240
D-3.046	FLOOR PLAN - Level 3	4	DATA CENTER RM 240
D-3.047	FLOOR PLAN - Level 3	4	DATA CENTER RM 240
D-3.048	FLOOR PLAN - Level 3	1	DATA CENTER RM 240
D-3.049	FLOOR PLAN - Level 3	1	DATA CENTER RM 240
D-3.050	FLOOR PLAN - Level 3	4	DATA CENTER RM 240
D-3.051	FLOOR PLAN - Level 3	4	DATA CENTER RM 240
D-3.052	FLOOR PLAN - Level 3	1	DATA CENTER RM 240
D-3.053	FLOOR PLAN - Level 3	1	DATA CENTER RM 240
D-3.054	FLOOR PLAN - Level 3	1	DATA CENTER RM 240
D-3.055	FLOOR PLAN - Level 3	1	DATA CENTER RM 240
D-3.056	FLOOR PLAN - Level 3	1	DATA CENTER RM 240
D-3.057	FLOOR PLAN - Level 3	2	DATA CENTER RM 240

TOTAL CABLE: 624

HOT ISLE CONTAINEMENT BILL OF MATERIAL

ITEM	DESCRIPTION	MANUFACTURER	PART #	QTY
1	BUILD TO SPEC KIT HOT AISLE CONTAINMENT (48"H X 96"W X 376"L)	CHATSWORTH	33000-704	1
2	SLIDING DOORS	CHATSWORTH	32770-702	2
3	DOOR MOUNTING BRACKET	CHATSWORTH	32805-704	2
4	DOOR TEMPLATE	CHATSWORTH	32875-701	1
5	BULB SEAL	CHATSWORTH	BULB SEAL	1
6	BTS CONTAINMENT ACCESSORY; 120" W X 6" H SINGLE BRUSH BULK PACK OF 10	CHATSWORTH	TS1053196	AS REQUIRED
7	PLANE CLIP	CHATSWORTH	3007-001	4

NOTES:	
1	VERIFY QUANTITIES WITH MANUFACTRE PRIOR TO PROCUREMENT.
2	SUBMIT DETAILED SHOP DRAWINGS WITH ACCURATE BOM, DATA SHEETS, AND INSTALLATION INSTRUCTIONS.
3	PROVIDE SUPERVISION AND FINAL INSPECTION BY MANUFACTURE REPRESENTATIVE DURING INSTALLATION.
4	MANUFACTURER TO TEST SYSTEM FOR AIR LEAKS DURING COMMISSIOING.
5	CONTRACTOR TO MAKE ANY ALTERATIONS FOR COMPLETE AND OPERATIONAL SYSTEM.

FSGROUP®
ARCHITECTS
16575 Village Drive
Houston Texas 77040
713 344 1752 PH
fsdesignbuild.com

PROJECT NAME

THE STATE OF TEXAS
FORT BEND COUNTY

INFORMATION TECHNOLGY BUILDING
EUGENE HEIMANN CIRCLE
FORT BEND COUNTY . RICHMOND . TEXAS

CONSULTANTS

PGA
ENGINEERS, INC
3838 N Sam Houston Pkwy E,
Suite 550
Houston, TX 77032
346.570.2418
pgaengineers.com
TBPE FIRM #12493

PROFESSIONAL SEAL

STATE OF TEXAS
JOHN GRUENWALD
100039
LICENSED
PROFESSIONAL ENGINEER
05/15/2024

ISSUED FOR
ISSUED FOR PROPOSALS AND PERMIT

REVISIONS

No.	DESCRIPTION	DATE

KEY PLAN

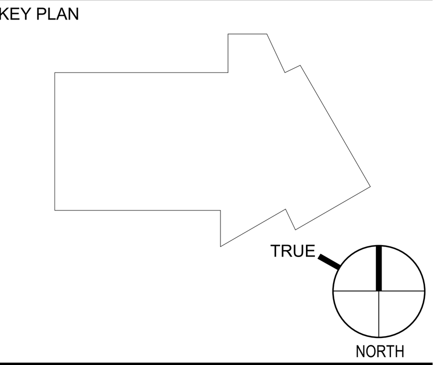

SHEET TITLE
TELECOMMUNICATIONS - EQUIPMENT SCHEDULES

SCALE

DATE
05/15/2024

PROJECT NUMBER
2319

SHEET NUMBER
T-501

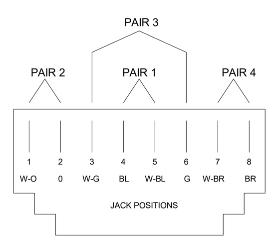

NOTE:
ALL DEVICES WIRED T568B AS SHOWN.

E4 568B WIRING DIAGRAM
NTS

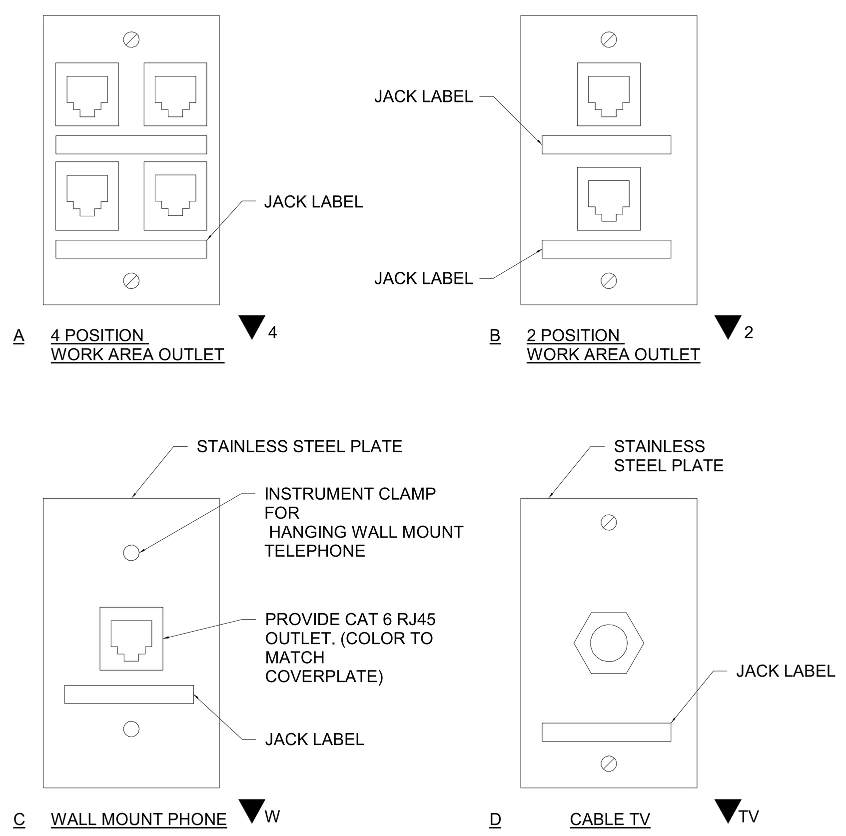

D3 COVERPLATE DETAILS
NTS

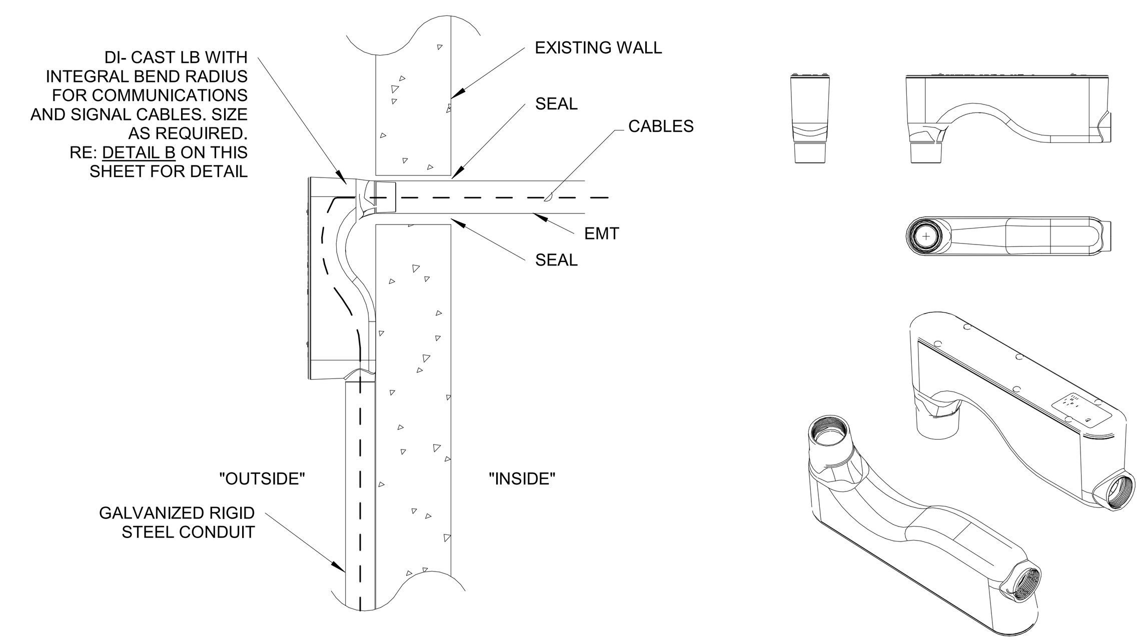

C3 DETAIL
NTS

DETAIL NOTES:

1. REFERENCE FLOOR PLANS FOR REQUIRED FLOOR CONNECTIONS.
2. COORDINATE COVER AND FINISH WITH ARCHITECT.
3. DATA BY TELECOM (DIV. 27). POWER BY ELECTRICAL (DIV. 26)
4. POKE THRU TO SUPPORT UP TO 8 CAT6 REF. ELECTRICAL DRAWINGS FOR ELECTRICAL SCOPE.
5. LEGRAND 6STCP POKE THRU WITH 6ACT8A DATA INSERT PLATE. SUBMIT PRODUCT DATA FOR APPROVAL PRIOR TO PROCUREMENT AND INSTALLATION.

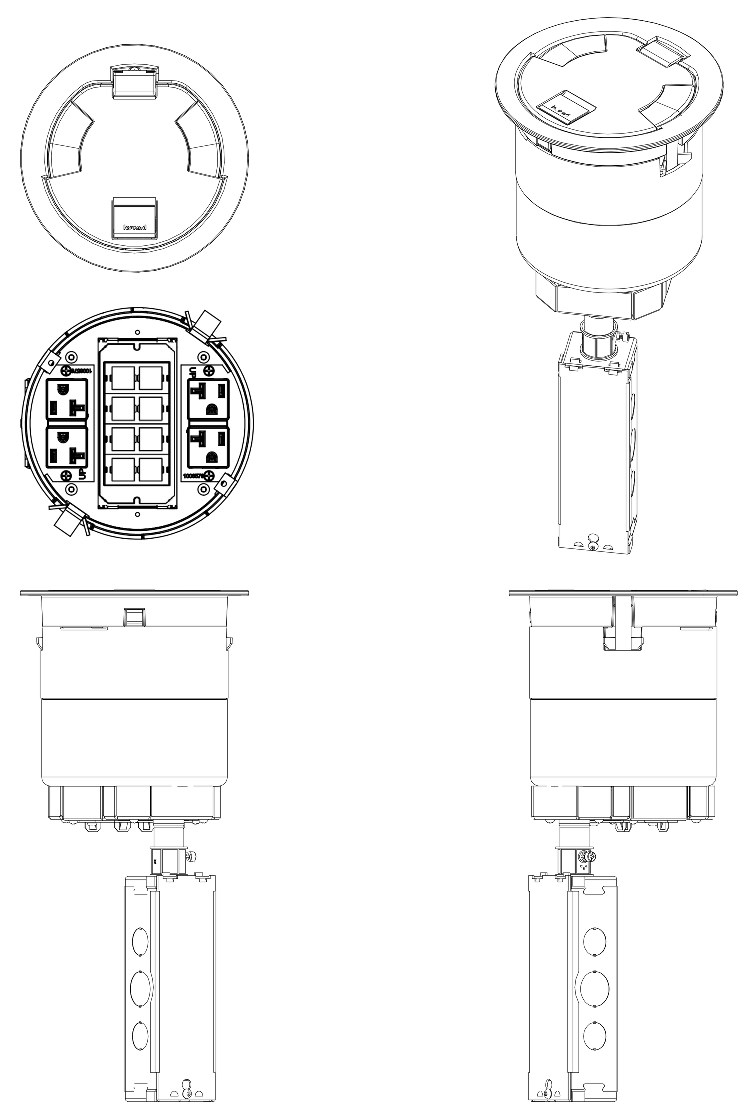

A2 POKE THRU
NTS

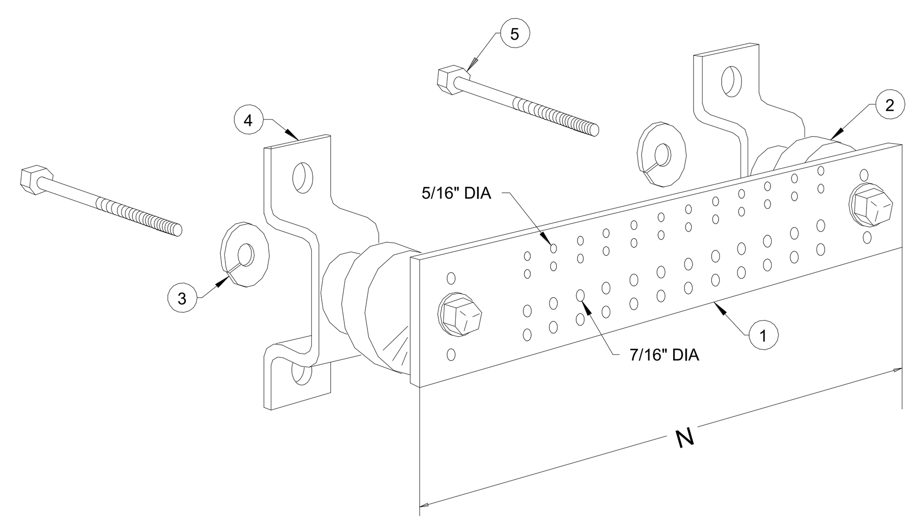

DETAIL NOTES:

1. COPPER GROUND BAR, 1/4" X 4" X N". ORTRONICS GB4X(N) ERICO TMGBA14L15PT OR EQUAL. N=12" FOR TGB, 24" FOR TMGB USE COMPRESSION LUGS WITH 2 SCREW HOLES AND ALUMINUM AND/OR COPPER ANTIOXIDANT JOINT COMPOUND
2. INSULATOR
3. LOCKWASHERS
4. WALLMOUNTING BRACKET
5. BOLT

D2 GROUNDING DETAILS
NTS

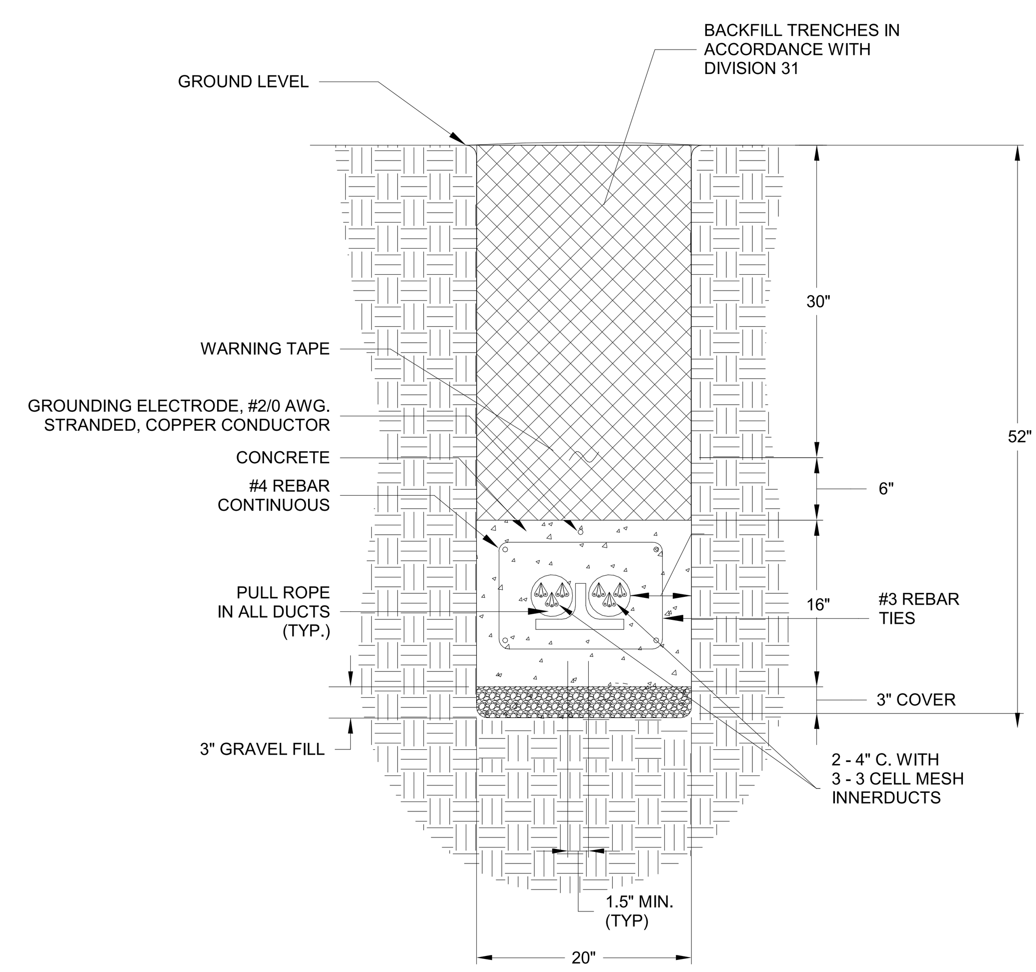

C2 TRENCH DETAIL
NTS

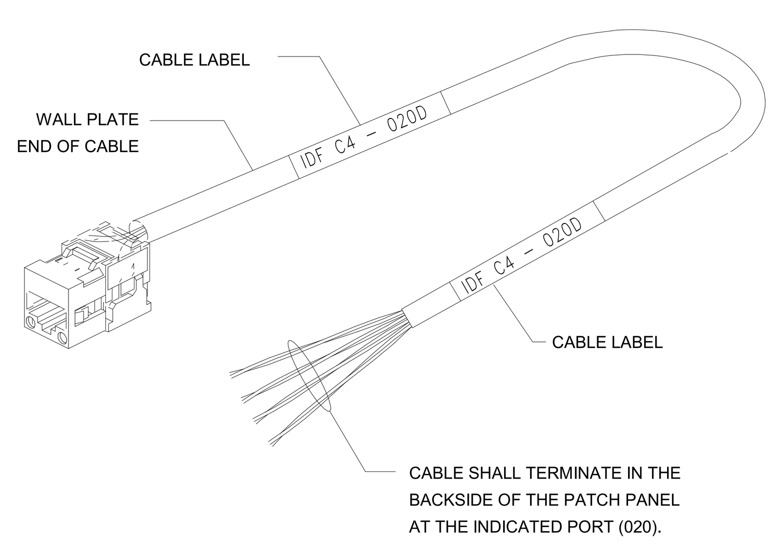

E1 COMMUNICATIONS CABLE LABELING
NTS

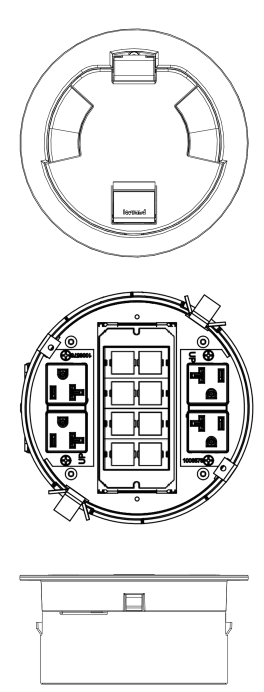

DETAIL NOTES:

1. REFERENCE FLOOR PLANS FOR REQUIRED FLOOR CONNECTIONS.
2. COORDINATE COVER AND FINISH WITH ARCHITECT.
3. DATA BY TELECOM (DIV. 27). POWER BY ELECTRICAL (DIV. 26)
4. FLOOR BOX TO SUPPORT UP TO 8 CAT6 REF. ELECTRICAL DRAWINGS FOR ELECTRICAL SCOPE.
5. SUBMIT PRODUCT DATA FOR APPROVAL PRIOR TO PROCUREMENT AND INSTALLATION.

D1 FLOOR BOX
NTS

FSGROUP®
ARCHITECTS
16575 Village Drive
Houston Texas 77040
713 344 1752 PH
fsdesignbuild.com

PROJECT NAME

THE STATE OF TEXAS FORT BEND COUNTY

INFORMATION TECHNOLGY BUILDING
EUGENE HEIMANN CIRCLE
FORT BEND COUNTY . RICHMOND . TEXAS

CONSULTANTS

PGA
ENGINEERS, INC
3838 N Sam Houston Pkwy E,
Suite 550
Houston, TX 77032
346.570.2418
pgaengineers.com
TBPE FIRM #12493

PROFESSIONAL SEAL

STATE OF TEXAS
JOHN GRUENWALD
100039
LICENSED
PROFESSIONAL ENGINEER
05/15/2024

ISSUED FOR
ISSUED FOR PROPOSALS AND PERMIT

REVISIONS

No.	DESCRIPTION	DATE

KEY PLAN

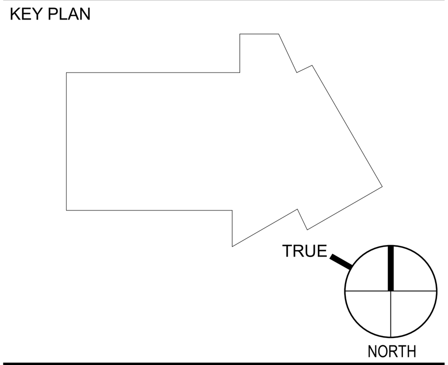

SHEET TITLE
TELECOMMUNICATIONS - DETAILS

SCALE
As indicated

DATE
05/15/2024

PROJECT NUMBER
2319

SHEET NUMBER
T-601

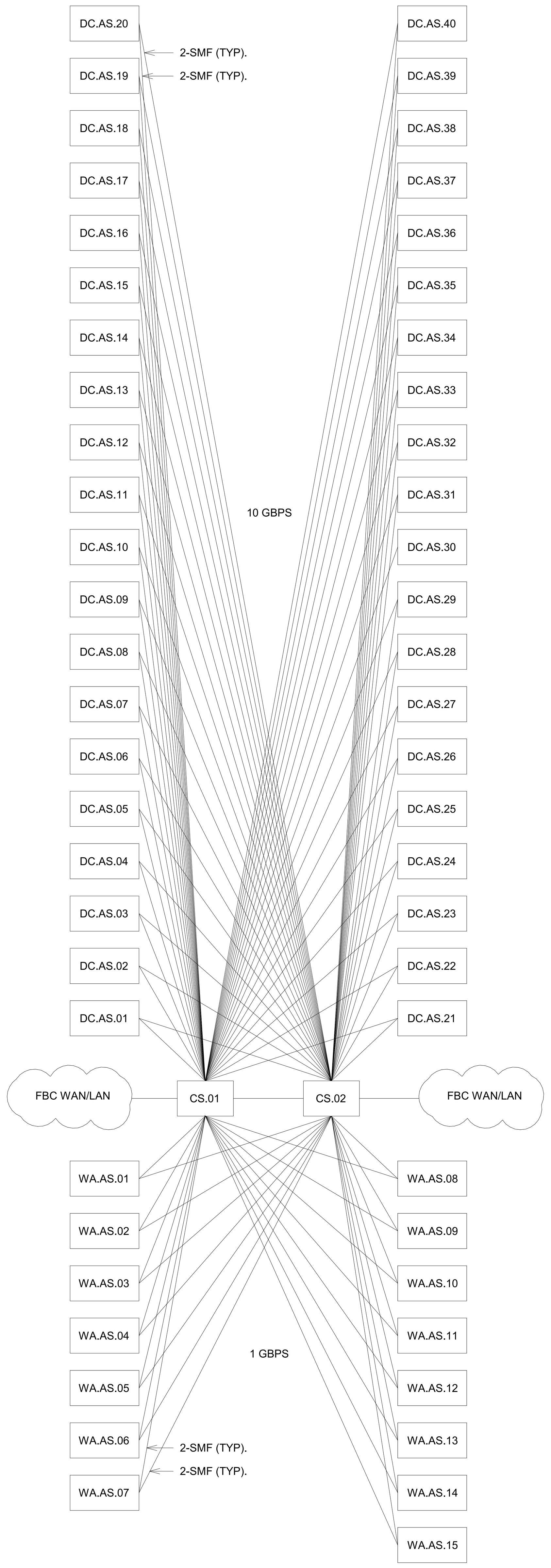

	48 PORT ACCESS - TYPE 1 (10GE)		
ITEM	PART NUMBER	DESCRIPTION	QTY
1	C9300-48P-E	CATALYST 9300 48-PORT POE+, NETWORK ESSENTIALS	40
2	C9300-NW-E-48	C9300 NETWORK ESSENTIALS, 48-PORT LICENSE	40
3	PWR-C1-715WAC-P	715W AC 80+ PRIMARY PLATINUM RATED POWER SUPPLY	40
4	PWR-C1-715WAC-P	715W AC 80+ SECONDARY PLATINUM RATED POWER SUPPLY	40
5	CAB-TA-NA	NORTH AMERICA AC TYPE A POWER CABLE X2	40
6	C9300-NM-8X	CATALYST 9300 8 X 10GE NETWORK MODULE	40
7	NETWORK-PNP-LIC	NETWORK PLUG-N-PLAY CONNECT FOR ZERO-TOUCH DEVICE DEPLOYMENT	40
8	S9300UK9-1612	CISCO CATALYST 9300 XE 16.12 UNIVERSAL	40
9	C9300-STACK-NONE	NO STACK CABLE SELECTED	40
10	C9300-SPWR-NONE	NO STACK POWER CABLE SELECTED	40
11	C9300-DNA-E-48	C9300 DNA ESSENTIALS, 48-PORT TERM LICENSES	40
12	C9300-DNA-E-48-3Y	C9300 DNA ESSENTIALS, 48-PORT - 3 YEAR TERM LICENSE	40

	CORE SWITCH		
ITEM	PART NUMBER	DESCRIPTION	QTY
1	C9606R CHASSIS	6 SLOT CHASSIS, 4 LINE CARD SLOTS, 2 SUP ENGINE SLOTS, 4 PS BAYS	2
2	C9606R	CISCO CATALYST 9600 SERIES SUPERVISOR ENGINE 1	2
3	C9606R	CISCO CATALYST 9600X SERIES SUPERVISOR ENGINE 2	2
4	C9600-LC-40YL4CD	COMBO LINE CARD, 40 PORTS 1/10/25GE SFP AND 2 PORTS 40/100GE QSFP UPLINKS	2
5	C9600-LC-24C	CISCO CATALYST 9600 SERIES 24-PORT 40GE/100GE LINE CARD	2
6	C9600-LC-48YL	CISCO CATALYST 9600 SERIES 48-PORT 25GE/10GE1 SFP28 LINE CARD	2
7	C9600-PWR-3KWAC	3000W POWER SUPPLY, QTY=4	2
8	CAB-C19-CBN	CABINET JUMPER 16A, 250VAC, QTY=4	2
9	C9606-FAN	FAN TRAY, 1621 BTU (MAX)	2
10	C9606-RACK-KIT	CISCO CATALYST 9600 SERIES 6 SLOT CHASSIS RACK MOUNT	2
11	C9600-DNA-A-5Y	C9600 CISCO DNA ADVANTAGE SOFTWARE SUBSCRIPTION, 5 YEAR LICENSE	2

	48 PORT ACCESS - TYPE 2 (1GE)		
ITEM	PART NUMBER	DESCRIPTION	QTY
1	C9300-48P-E	CATALYST 9300 48-PORT POE+, NETWORK ESSENTIALS	14
2	C9300-NW-E-48	C9300 NETWORK ESSENTIALS, 48-PORT LICENSE	14
3	PWR-C1-715WAC-P	715W AC 80+ PRIMARY PLATINUM RATED POWER SUPPLY	14
4	PWR-C1-715WAC-P	715W AC 80+ SECONDARY PLATINUM RATED POWER SUPPLY	14
5	CAB-TA-NA	NORTH AMERICA AC TYPE A POWER CABLE X2	14
6	C9300-NM-4G	CATALYST 9300 4 X 1GE NETWORK MODULE	14
7	NETWORK-PNP-LIC	NETWORK PLUG-N-PLAY CONNECT FOR ZERO-TOUCH DEVICE DEPLOYMENT	14
8	S9300UK9-1612	CISCO CATALYST 9300 XE 16.12 UNIVERSAL	14
9	C9300-STACK-NONE	NO STACK CABLE SELECTED	14
10	C9300-SPWR-NONE	NO STACK POWER CABLE SELECTED	14
11	C9300-DNA-E-48	C9300 DNA ESSENTIALS, 48-PORT TERM LICENSES	14
12	C9300-DNA-E-48-3Y	C9300 DNA ESSENTIALS, 48-PORT - 3 YEAR TERM LICENSE	14

1 NETWORK CONNECTIVITY DIAGRAM & BOM
NTS

FSGROUP®
ARCHITECTS
16575 Village Drive
Houston Texas 77040
713 344 1752 PH
fsdesignbuild.com

PROJECT NAME

THE STATE OF TEXAS
FORT BEND COUNTY

INFORMATION TECHNOLGY BUILDING
EUGENE HEIMANN CIRCLE
FORT BEND COUNTY . RICHMOND . TEXAS

CONSULTANTS

PGA
ENGINEERS, INC
3838 N Sam Houston Pkwy E,
Suite 550
Houston, TX 77032
346.570.2418
pgaengineers.com
TBPE FIRM #12493

PROFESSIONAL SEAL

STATE OF TEXAS
JOHN GRUENWALD
100039
LICENSED
PROFESSIONAL ENGINEER
05/15/2024

ISSUED FOR

ISSUED FOR PROPOSALS AND PERMIT

REVISIONS

No.	DESCRIPTION	DATE

KEY PLAN

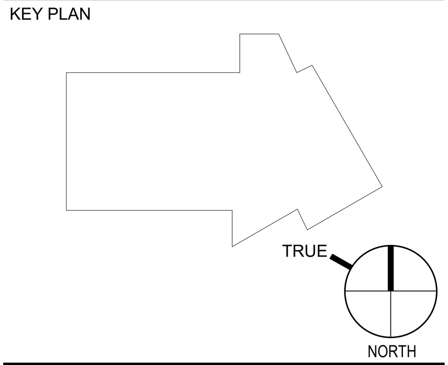

SHEET TITLE

TELECOMMUNICATIONS - DETAILS

SCALE NTS

DATE 05/15/2024

PROJECT NUMBER 2319

SHEET NUMBER

T-602

A/V EQUIPMENT SYMBOLS LIST

SYMBOL	TYPE
AA	AUDIO AMPLIFIER
ANT	WIRELESS VIDEO ANTENNA
AV1	AV FLOORBOX TYPE 1
AV2	AV FLOORBOX TYPE 2
HDMI	AUDIO VIDEO JACK: HDMI
AVC	AV CABINET
CC	CABLE CUBBY TYPE 1
CM	CEILING MICROPHONE
CP	CONTROL PROCESSOR
DSP	DIGITAL SIGNAL PROCESSOR
FP#	FLAT PANEL DISPLAY 1 = TYPE 1 2 = TYPE 2 3 = TYPE 3 4 = TYPE 4
MIC	MICROPHONE
MS	MOTORIZED SCREEN
OP	OVERHEAD PROJECTOR
RS	ROOM SCHEDULER
SP1	CEILING SPEAKER TYPE 1
TP1	TOUCH PANEL TYPE 1
VC	VIDEO CONFERENCE CAMERA
AVB	VIDEO CONFERENCE A/V BRIDGE
VS	VIDEO SWITCHER MATRIX
VR	VIDEO RECEIVER
VT	VIDEO TRANSMITTER
VW	VIDEO WALL
WM	WIRELESS MICROPHONE
WVR	WIRELESS VIDEO RECEIVER
WVT	WIRELESS VIDEO TRANSMITTER
PC1	TYPE 1 PC
PC2	TYPE 2 PC
UTX	USB EXTENDER
ENC	VIDEO OVER IP ENCODER
STB	DTV, SET TOP BOX
VCB	VIDEO CONFERENCING BAR

ABBREVIATION

AUDIO		INDUSTRY TERMS	
AA	AUDIO AMPLIFIER	ADA	AMERICANS WITH DISABILITIES ACT
AEC	AUTO ECHO CANCELATION.	AFF	ABOVE FINISHED FLOOR
ALD	ASSITIVE LISTENING DEVICE	ANSI	AMERICAN NATIONAL STANDARDS INSTITUTE
DSP	DIGITAL SOUND PROCESSOR	ANSI	AMERICAN NATIONAL STANDARDS INSTITUTE
MIC	MICROPHONE	AVCS	AUDIO VIDEO CONTROL SYSTEM
PA	POWER AMPLIFIER	AVI	AUDIO VISUAL INTEGRATOR
SP	SPEAKER	BIM	BUILDING INFORMATION MODELING
WMS	WIRELESS MICROPHONE SYSTEM	CAD	COMPUTER AIDED DESIGN
VIDEO		CADD	COMPUTER AIDED DESIGN AND DRAFTING
CCTV	CLOSED CIRCUIT TELEVISION	CEA	CONSUMER ELECTRONICS ASSOCIATION
CAM	CAMERA	CEDIA	CUSTOM ELECTRONIC DESIGN AND INSTALLATION ASSOCIATION
CCU	CAMRA CONTROL UNIT	CSI	CONSTRUCTION SPECIFICATIONS INSTITUTE
DA	DISTRIBUTION AMPLIFIER	ISO	INTERNATIONAL ORGANIZATION FOR STANDARDIZATION
EDID	EXTENDED DISPLAY IDENTIFICATION DATA	NCS	NATIONAL CAD STANDARD
FP	FLAT PANEL DISPLAY	NEC	NATIONAL ELECTRIC CODE
HDBT	HDBASET (VIDEO STANDARD)	NEM	NATIONAL EQUIPMENT MANUFACTURER'S ASSOCIATION
HDCP	HIGH-BANDWIDTH DIGITAL CONTENT PROTECTION	NIBS	NATIONAL INSTITUTE OF BUILDING SCIENCES
HDMI	HIGH-DEFINITION MULTIMEDIA INTERFACE	RCP	REFLECTED CEILING PLAN
LEN	CAMERA LENS	SIA	SECURITY INDUSTRY ASSOCIATION
TUN	TUNER	UDS	UNIFORM DRAWING SYSTEM
VS	VIDEO MATRIX SWITCHER	NETWORK	
EQUIPMENT HARDWARE		AVLAN	AUDIO VISUAL LOCAL AREA NETWORK
ANT	ANTENNA	BLAN	BUSINESS LOCAL AREA NETWORK
AVC	A/V EQUIPMENT CABINET	CAT	PHYSICAL LAYER CATEGORY NETWORK CABLE
FPM	FLAT PANEL MOUNT	DANTE	DIGITAL AUDIO NETWORK THROUGH ETHERNET
IDF	INTERMEDIATE DISTRIBUTION FRAME	LAN	LOCAL AREA NETWORK
LEC	LECTERN	POE	POWER OVER ETHERNET
PMT	PROJECTOR MOUNT	VLAN	VIRTUAL LOCAL AREA NETWORK
RU	RACK UNIT (1.75”) OF VERTICAL SPACE IN AN AV RACK	VOIP	VOICE OVER INTERNET PROTOCOL.
UPS	UNINTERRUPTIBLE POWER SUPPLY	WAN	WIDE AREA NETWORK
WRK	WALL RACK		

COMMON WIRE TYPES

TYPE	PART #	PLENUM	CONDUCTR COUNT	SHIELD	WIRE GAUGE	NOTES
MIC/LINE	BELDEN 8428	NO	2	1	18	
MIC/LINE	BELDEN 8412P	YES	2	1	20	
SPEAKER	BELDEN 5200UE	NO	2	0	16	
SPEAKER	BELDEN 6000UE	YES	2	0	12	
CATEGORY	BELDEN 7883A	NO	8	0	24	PATCH CABLE
CATEGORY	BELDEN 2413	YES	8	0	23	2400
CATEGORY	BELDEN 4813	YES	8	0	23	4800
CATEGORY	BELDEN 7953A	NO	8	1	23	SHIELDED
M. FIBER	CORNING 024T88-33190-D3	YES	24	N/A	50 μM	(OM4)
S. FIBER	CORNING 024E88-33131-D3	YES	24	N/A	8.2 μM	(OS2)

GENERAL NOTES

1. FOLLOW TELECOM STANDARDS AND PRACTICES. SEE DIVISION 27 SPECIFICATIONS AND DRAWINGS.
2. REGISTERED COMMUNICATIONS DISTRIBUTION DESIGNER (RCDD) SUPERVISOR SHALL REVIEW, APPROVE AND STAMP ALL SHOP DRAWINGS. COORDINATE DRAWINGS AND RECORD DRAWINGS.
3. ALL WALL PENETRATIONS SHALL BE SEALED WITH APPROVED FIRE STOPPING.
4. REFER TO THE ELECTRICAL FLOOR PLAN DRAWINGS FOR ADDITIONAL ROUGH-IN REQUIREMENTS. WHERE THERE ARE DRAWING DISCREPANCIES, THE CONTRACTOR SHALL INSTALL THE GREATER QUANTITY OF DEVICES.
5. REFER TO THE SITE PLAN ON AND RISER DIAGRAM FOR TELECOMMUNICATION BACKBONE CONDUITS/CABLES. FIELD COORDINATE EXACT ROUTING WITH OTHER TRADES.
6. ALL COMMUNICATIONS EQUIPMENT SHOWN SHALL BE PROVIDED AND INSTALLED BY CONTRACTOR UNLESS NOTED OTHERWISE.
7. BOND ALL COMMUNICATIONS CABINETS, RELAY RACKS, CABLE TRAYS, AND OTHER METALLIC SUPPORTING DEVICES TO TELECOMMUNICATIONS GROUND BUSBAR INSIDE COMMUNICATIONS ROOM. BOND WITH A #6 GROUND CONDUCTOR.
8. ALL HORIZONTAL VOICE AND DATA CABLES SHALL BE DISTRIBUTED VIA MINIMUM 1" CONDUIT AND/OR CABLE TRAY. NO EXCEPTIONS.
9. SINGLE LINE DIAGRAMS, SCHEMATICS, DETAILS AND CONDUIT PATHS SHOWN HEREIN ARE CONCEPTUAL AND ILLUSTRATE ONLY THE FUNCTIONAL RELATIONSHIPS BETWEEN COMPONENTS OF THE SYSTEM. ACCORDINGLY, FULL SHOP DRAWING DEVELOPMENT IS REQUIRED TO REALIZE THE SPECIFIED FUNCTIONS.
10. DEVICE LOCATIONS ON PLANS ARE CONCEPTUAL. LOCATE AS SITE CONDITIONS REQUIRE AND AS APPROVED BY GC.
11. REFER TO THE BID SPECIFICATION FOR ADDITIONAL REQUIREMENTS REGARDING THIS WORK.
12. PAINTING, PATCHING AND FINISHES FOR DEVICES LOCATED IN EXISTING AREAS SHALL MATCH EXISTING FINISHES AS APPROVED BY GC.
13. FINISHES OF DEVICES IN NEW/REMODEL AREAS SHALL BE APPROVED BY GC.
14. WORK AND MATERIALS SHALL CONFORM TO THE MOST CURRENT UNIFORM STANDARD SPECIFICATIONS AND DETAILS FOR CONSTRUCTION AS FURNISHED BY GC. WORK AND MATERIALS NOT IN CONFORMANCE WITH THESE SPECIFICATIONS AND DETAILS ARE SUBJECT TO REMOVAL AND REPLACEMENT AT THE CONTRACTOR'S EXPENSE.
15. IN SOME INSTANCES THE IDF MAY BE OVER 90 METERS FROM THE IP DEVICE DUE TO LEGACY DESIGN STANDARDS WHEN THE BUILDING WAS CONSTRUCTED. IF TESTED CABLE DOES NOT PASS CERTIFICATION, CONTRACTOR MUST USE MIDSPAN EXTENDER INSTALLED INSIDE OF ENCLOSURE. REFERENCE DETAIL SHEETS FOR INSTALLATION DIAGRAM.

CONDUIT DESIGNATION KEY

(2) 1" C

QUANTITY OF CONDUITS (IF MORE THAN 1)

CONDUIT

CONDUIT SIZE (MINIMUM)

DEVICE DESIGNATION KEY

X.XX.XX

LEVEL

DEVICE COUNT

AV EQUIPMENT SYMBOLS LIST

SHEET INDEX

SHEET NO.	DESCRIPTION
TA-000	AUDIO/VIDEO - LEGEND AND NOTES
TA-101	AUDIO/VIDEO - FLOOR PLAN - LEVEL 1
TA-102	AUDIO/VIDEO - FLOOR PLAN - LEVEL 2
TA-103	AUDIO/VIDEO - FLOOR PLAN - LEVEL 3
TA-501	AUDIO VIDEO - DEVICE SCHEDULES
TA-601	AUDIO/VIDEO - DETAILS
TA-602	AUDIO/VIDEO - DETAILS

AV ROOM LIST

ROOM NO.	DESCRIPTION
102	TRAINING ROOM WITH OVERHEAD PROJECTORS
129	SMALL CONFERENCE ROOM WITH FLAT PANEL DISPLAY
130	GYM WITH FLAT PANEL DISPLAY
208	CYBER/NSOC ROOM WITH FLAT PANEL DISPLAY
221	MEDUIM CONFERENCE ROOM WITH FLAT PANEL DISPLAY
308	ASSISTANT DIRECTOR OFFICE WITH FLAT PANEL DISPLAY
309	TESTING HUDDLE WITH FLAT PANEL DISPLAY
309	MEDUIM CONFERENCE WITH FLAT PANEL DISPLAY
311	DIRECTOR OFFICE WITH FLAT PANEL DISPLAY
312	ASSISTANT DIRECTOR OFFICE WITH FLAT PANEL DISPLAY
313	VIDEO ROOM WITH FLAT PANEL DISPLAY

FSGROUP ARCHITECTS
16575 Village Drive
Houston Texas 77040
713 344 1752 PH
fsdesignbuild.com

PROJECT NAME

THE STATE OF TEXAS FORT BEND COUNTY

INFORMATION TECHNOLGY BUILDING
EUGENE HEIMANN CIRCLE
FORT BEND COUNTY . RICHMOND . TEXAS

CONSULTANTS

PGA ENGINEERS, INC
3838 N Sam Houston Pkwy E, Suite 550
Houston, TX 77032
346.570.2418
pgaengineers.com
TBPE FIRM #12493

PROFESSIONAL SEAL

05/15/2024

ISSUED FOR

ISSUED FOR PROPOSALS AND PERMIT

REVISIONS

No.	DESCRIPTION	DATE

KEY PLAN

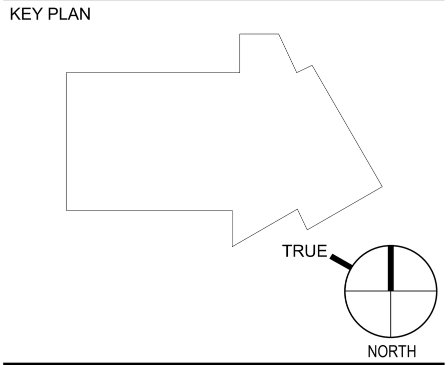

SHEET TITLE

AUDIO/VIDEO - LEGEND AND NOTES

SCALE

DATE
05/15/2024

PROJECT NUMBER
2319

SHEET NUMBER

TA-000

GENERAL NOTES:

1. REFER TO GENERAL NOTES, SYMBOLS, AND ABBREVIATIONS SHEETS FOR ADDITIONAL INFORMATION.
2. COORDINATE EQUIPMENT INSTALLATION INSIDE IDF ROOMS WITH IT PROJECT MANAGER.
3. ALL LOW VOLTAGE CABLING SHALL BE INSTALLED IN ACCORDANCE WITH DIVISION 27 SPECIFICATIONS.

KEYED NOTES:

1. TYPE 3 75" FLAT PANEL DISPLAY WITH A/V BACK BOX AT 60" AFF.
2. HDMI OVER CAT6 VIDEO RECEIVER.
3. HDMI OVER CAT6 VIDEO TRANSMITTER.
4. MOTORIZED SCREEN. THROW DISTANCE IS APPROXIMATE, A/V CONTRACTOR SHALL SUBMIT SHOP DRAWING FOR PROJECTOR PLACEMENT.
5. MOTORIZED PROJECTOR LIFT
6. OVERHEAD PROJECTOR (TYPICAL). REFERENCE SPECIFICATIONS, DETAIL D3/TA-601.
7. LOUDSPEAKER TYPE 1. CEILING SURFACE MOUNT. A/V CONTRACTOR SHALL SUBMIT SHOP DRAWING FOR SPEAKER PLACEMENT.
8. TYPE 2 65" FLAT PANEL DISPLAY WITH A/V BACK BOX AT 60" AFF.
9. DSP, PROCESSOR, AND VIDEO MATRIX LOCATION. REFERENCE SCHEDULE.
10. WIRELESS MICROPHONE SYSTEM. REFER TO SPECIFICATIONS FOR SYSTEM DETAILS AND QUANTITIES.
11. COMBINATION OF A/V, DATA, ELECTRICAL FLOOR BOX. A/V BY AV CONTRACTOR (DIV. 27). DATA BY TELECOM (DIV. 27). FLOOR BOXES AND CONDUITS BY ELECTRICAL (DIV. 26). REFERENCE ELECTRICAL AND TELECOM DRAWINGS. TYPICAL FOR ALL FLOOR BOXES.
12. CABLE CUBBY TYPE 1 (TYPICAL) REFERENCE SPECIFICATIONS, A/V DEVICE SCHEDULE.
13. TOUCH PANEL DISPLAY TYPE 1 (TYPICAL).
14. TOUCH PANEL DISPLAY TYPE 2 (TYPICAL).
15. A/V CABINET MOUNTED IN CREDENZA. A/V CONTRACTOR SHALL COORDINATE WITH FURNITURE AND PROVIDE SHOP DRAWING FOR CREDENZA DETAIL.
16. ROOM SCHEDULER.
17. VIDEO CONFERENCE CAMERA SYSTEM WITH WIRELESS VIDEO CAPABILITY. CENTER TO DISPLAY AND MOUNTED MINIMUM 48" AFF.
18. WIRELESS VIDEO RECEIVER.
19. VIDEO CONFERENCE PTZ CAMERA.
20. LOUDSPEAKER TYPE 2. CEILING PENDANT MOUNT. A/V CONTRACTOR SHALL SUBMIT SHOP DRAWING FOR SPEAKER PLACEMENT.
21. 70V AUDIO AMPLIFIER.

1 A/V - FLOOR PLAN - LEVEL 1
1/8" = 1'-0"

FSGROUP® ARCHITECTS
16575 Village Drive
Houston Texas 77040
713 344 1752 PH
fsdesignbuild.com

PROJECT NAME

INFORMATION TECHNOLGY BUILDING
EUGENE HEIMANN CIRCLE
FORT BEND COUNTY . RICHMOND . TEXAS

CONSULTANTS

PGA ENGINEERS, INC
3838 N Sam Houston Pkwy E,
Suite 550
Houston, TX 77032
346.570.2418
pgaengineers.com
TBPE FIRM #12493

PROFESSIONAL SEAL

STATE OF TEXAS
JOHN GRUENWALD
100039
LICENSED
PROFESSIONAL ENGINEER
05/15/2024

ISSUED FOR

ISSUED FOR PROPOSALS AND PERMIT

REVISIONS

No.	DESCRIPTION	DATE

KEY PLAN

TRUE NORTH

SHEET TITLE

AUDIO/VIDEO - FLOOR PLAN - LEVEL 1

SCALE 1/8" = 1'-0"

DATE 05/15/2024

PROJECT NUMBER 2319

SHEET NUMBER

TA-101

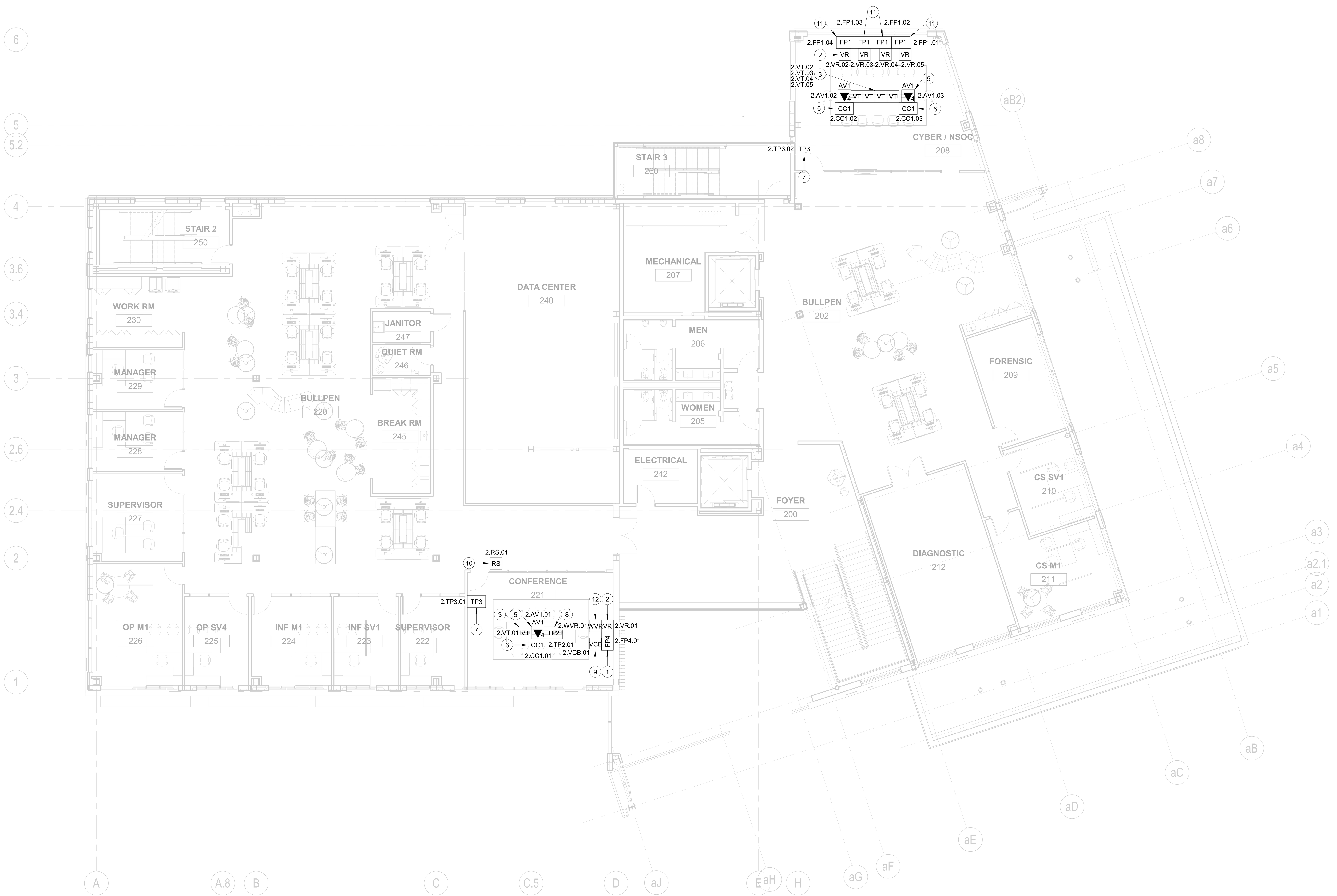

1 A/V - FLOOR PLAN - LEVEL 2
1/8" = 1'-0"

GENERAL NOTES:

1. REFER TO GENERAL NOTES, SYMBOLS, AND ABBREVIATIONS SHEETS FOR ADDITIONAL INFORMATION.
2. COORDINATE EQUIPMENT INSTALLATION INSIDE IDF ROOMS WITH IT PROJECT MANAGER.
3. ALL LOW VOLTAGE CABLING SHALL BE INSTALLED IN ACCORDANCE WITH DIVISION 27 SPECIFICATIONS.

KEYED NOTES:

1 TYPE 4 86" FLAT PANEL DISPLAY WITH A/V BACK BOX AT 60" AFF.

2 HDMI OVER CAT6 VIDEO RECEIVER.

3 HDMI OVER CAT6 VIDEO TRANSMITTER.

4 TYPE 2 65" FLAT PANEL DISPLAY WITH A/V BACK BOX AT 60" AFF.

5 COMBINATION OF A/V, DATA, ELECTRICAL FLOOR BOX. A/V BY AV CONTRACTOR (DIV. 27). DATA BY TELECOM (DIV. 27). FLOOR BOXES AND CONDUITS BY ELECTRICAL (DIV. 26). REFERENCE ELECTRICAL AND TELECOM DRAWINGS. TYPICAL FOR ALL FLOOR BOXES.

6 CABLE CUBBY TYPE 1 (TYPICAL) REFERENCE SPECIFICATIONS, A/V DEVICE SCHEDULE.

7 TOUCH PANEL DISPLAY TYPE 3.

8 TOUCH PANEL DISPLAY TYPE 2.

9 VIDEO CONFERENCE CAMERA SYSTEM WITH WIRELESS VIDEO CAPABILITY. CENTER TO DISPLAY AND MOUNTED MINIMUM 48" AFF.

10 ROOM SCHEDULER

11 TYPE 1 50" FLAT PANEL DISPLAY WITH CHIEF CEILING MOUNT. CONTRACTOR SHALL SUBMIT SHOP DRAWINGS FOR EXACT HEIGHT

12 WIRELESS VIDEO RECEIVER.

FSGROUP®
ARCHITECTS
16575 Village Drive
Houston Texas 77040
713 344 1752 PH
fsdesignbuild.com

PROJECT NAME

THE STATE OF TEXAS
FORT BEND COUNTY

INFORMATION TECHNOLGY BUILDING
EUGENE HEIMANN CIRCLE
FORT BEND COUNTY . RICHMOND . TEXAS

CONSULTANTS

PGA
ENGINEERS, INC
3838 N Sam Houston Pkwy E,
Suite 550
Houston, TX 77032
346.570.2418
pgaengineers.com
TBPE FIRM #12493

PROFESSIONAL SEAL

STATE OF TEXAS
JOHN GRUENWALD
100039
LICENSED
PROFESSIONAL ENGINEER
05/15/2024

ISSUED FOR

ISSUED FOR PROPOSALS AND PERMIT

REVISIONS

No.	DESCRIPTION	DATE

KEY PLAN

TRUE
NORTH

SHEET TITLE

AUDIO/VIDEO - FLOOR PLAN - LEVEL 2

SCALE 1/8" = 1'-0"

DATE 05/15/2024

PROJECT NUMBER 2319

SHEET NUMBER

TA-102

1 A/V - FLOOR PLAN - LEVEL 3
1/8" = 1'-0"

GENERAL NOTES:

1. REFER TO GENERAL NOTES, SYMBOLS, AND ABBREVIATIONS SHEETS FOR ADDITIONAL INFORMATION.
2. COORDINATE EQUIPMENT INSTALLATION INSIDE IDF ROOMS WITH IT PROJECT MANAGER.
3. ALL LOW VOLTAGE CABLING SHALL BE INSTALLED IN ACCORDANCE WITH DIVISION 27 SPECIFICATIONS.

KEYED NOTES:

1 TYPE 4 86" FLAT PANEL DISPLAY WITH A/V BACK BOX AT 60" AFF.

2 HDMI OVER CAT6 VIDEO RECEIVER.

3 HDMI OVER CAT6 VIDEO TRANSMITTER.

4 TYPE 1 50" FLAT PANEL DISPLAY WITH A/V BACK BOX AT 60" AFF.

5 COMBINATION OF A/V, DATA, ELECTRICAL FLOOR BOX. A/V BY AV CONTRACTOR (DIV. 27). DATA BY TELECOM (DIV. 27). FLOOR BOXES AND CONDUITS BY ELECTRICAL (DIV. 26). REFERENCE ELECTRICAL AND TELECOM DRAWINGS. TYPICAL FOR ALL FLOOR BOXES.

6 CABLE CUBBY TYPE 1 (TYPICAL) REFERENCE SPECIFICATIONS, A/V DEVICE SCHEDULE.

7 TOUCH PANEL DISPLAY TYPE 1 (TYPICAL). REFERENCE SPECIFICATIONS AND AV DEVICE SCHEDULE ON SHEET TA-603 FOR SPECIFIC QUANTITY AND TYPE.

8 TOUCH PANEL DISPLAY TYPE 2 (TYPICAL). REFERENCE SPECIFICATIONS AND AV DEVICE SCHEDULE ON SHEET TA-603 FOR SPECIFIC QUANTITY AND TYPE.

9 VIDEO CONFERENCE CAMERA SYSTEM WITH WIRELESS VIDEO CAPABILITY. CENTER TO DISPLAY AND MOUNTED MINIMUM 48" AFF.

10 PROVIDE INFRASTRUCTURE FOR FUTURE SCHEDULER.

11 WIRELESS VIDEO RECEIVER.

FSGROUP®
ARCHITECTS
16575 Village Drive
Houston Texas 77040
713 344 1752 PH
fsdesignbuild.com

PROJECT NAME

THE STATE OF TEXAS · FORT BEND COUNTY

INFORMATION TECHNOLGY BUILDING
EUGENE HEIMANN CIRCLE
FORT BEND COUNTY . RICHMOND . TEXAS

CONSULTANTS

PGA
ENGINEERS, INC
3838 N Sam Houston Pkwy E,
Suite 550
Houston, TX 77032
346.570.2418
pgaengineers.com
TBPE FIRM #12493

PROFESSIONAL SEAL

STATE OF TEXAS
JOHN GRUENWALD
100039
LICENSED
PROFESSIONAL ENGINEER
05/15/2024

ISSUED FOR

ISSUED FOR PROPOSALS AND PERMIT

REVISIONS

No.	DESCRIPTION	DATE

KEY PLAN

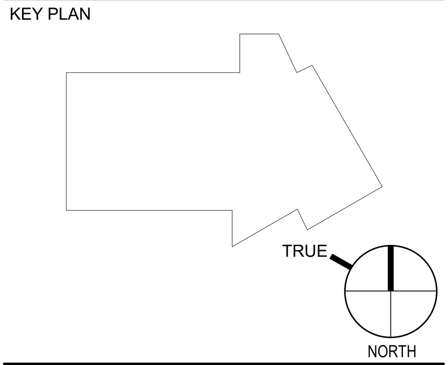

SHEET TITLE

AUDIO/VIDEO - FLOOR PLAN - LEVEL 3

SCALE 1/8" = 1'-0"

DATE 05/15/2024

PROJECT NUMBER 2319

SHEET NUMBER

TA-103

TRAINING ROOM 102						
ROOM NO.	LEVEL	DEVICE NO.	DESCRIPTION	MANUFACTURER	MODEL NO.	NOTES
102A	FLOOR PLAN - Level 1	1.AV1.02	CRFB HOUSING	WIREMOLD	880CS2-NA	
102A	FLOOR PLAN - Level 1	1.CC1.02	CABLE ACCESS ENCLOSURE	EXTRON	CABLE CUBBY 500	
102A	FLOOR PLAN - Level 1	1.FP3.01	75" DISPLAY	LG	75UL3J-E	
102A	FLOOR PLAN - Level 1	1.FP3.03	75" DISPLAY	LG	75UL3J-E	
102A	FLOOR PLAN - Level 1	1.MIC.01	GOOSENECK CARDIOD MICROPHONE	SHURE	MICROFLEX MX418D/C	
102A	FLOOR PLAN - Level 1	1.MS1.01	MOTORIZED PROJECTOR SCREEN	DRAPER	ACCESSS E	
102A	FLOOR PLAN - Level 1	1.OP.01	8,000 LUMEN, 4K READY, LASER PROJECTOR	PANASONIC	PT-RCQ80	
102A	FLOOR PLAN - Level 1	1.SP2.01	PENDANT SPEAKER	JBL	CONTROL 64P/T	
102A	FLOOR PLAN - Level 1	1.SP2.02	PENDANT SPEAKER	JBL	CONTROL 64P/T	
102A	FLOOR PLAN - Level 1	1.SP2.03	PENDANT SPEAKER	JBL	CONTROL 64P/T	
102A	FLOOR PLAN - Level 1	1.SP2.04	PENDANT SPEAKER	JBL	CONTROL 64P/T	
102A	FLOOR PLAN - Level 1	1.SP2.05	PENDANT SPEAKER	JBL	CONTROL 64P/T	
102A	FLOOR PLAN - Level 1	1.SP2.06	PENDANT SPEAKER	JBL	CONTROL 64P/T	
102A	FLOOR PLAN - Level 1	1.SP2.07	PENDANT SPEAKER	JBL	CONTROL 64P/T	
102A	FLOOR PLAN - Level 1	1.SP2.08	PENDANT SPEAKER	JBL	CONTROL 64P/T	
102A	FLOOR PLAN - Level 1	1.SP2.09	PENDANT SPEAKER	JBL	CONTROL 64P/T	
102A	FLOOR PLAN - Level 1	1.SP2.10	PENDANT SPEAKER	JBL	CONTROL 64P/T	
102A	FLOOR PLAN - Level 1	1.SP2.11	PENDANT SPEAKER	JBL	CONTROL 64P/T	
102A	FLOOR PLAN - Level 1	1.SP2.12	PENDANT SPEAKER	JBL	CONTROL 64P/T	
102A	FLOOR PLAN - Level 1	1.TP1.02	TOUCH SCREEN	CRESTRON	TSW-1070-B-S	
102A	FLOOR PLAN - Level 1	1.TP2.02	TOUCH SCREEN	CRESTRON	TSW-1070-B-S	
102A	FLOOR PLAN - Level 1	1.VC.04	PTZ VIDEO CONFERENCE CAMERA	QSC NC SERIES	REFER TO SPECIFICATION	
102A	FLOOR PLAN - Level 1	1.VC.05	PTZ VIDEO CONFERENCE CAMERA	QSC NC SERIES	REFER TO SPECIFICATION	
102A	FLOOR PLAN - Level 1	1.VR.01	DIGITAL MEDIA TRANSMITTER	CRESTRON	DM-RMC-4KZ-SCALER-C	
102A	FLOOR PLAN - Level 1	1.VR.03	DIGITAL MEDIA RECEIVER	CRESTRON	DM-RMC-4KZ-SCALER-C	
102A	FLOOR PLAN - Level 1	1.VR.04	DIGITAL MEDIA RECEIVER	CRESTRON	DM-RMC-4KZ-SCALER-C	
102A	FLOOR PLAN - Level 1	1.VT.02	DIGITAL MEDIA TRANSMITTER	CRESTRON	DM-TX-4KZ-100-C-1G	
102A	FLOOR PLAN - Level 1	1.VT.03	WALL PLATE		REFER TO SPECIFICATION	
102B	FLOOR PLAN - Level 1	1.AA.01	AUDIO AMPLIFIER	QSC	SPA2-200	
102B	FLOOR PLAN - Level 1	1.AA.02	AUDIO AMPLIFIER	QSC	SPA2-200	
102B	FLOOR PLAN - Level 1	1.AV1.03	CRFB HOUSING	WIREMOLD	880CS2-NA	
102B	FLOOR PLAN - Level 1	1.AVB.01	VIDEO CONFERENCING BRIDGE	QSC	A.I/O-USB Bridge	
102B	FLOOR PLAN - Level 1	1.AVC.02	AUDIO VIDEO CABINET	MIDDLE ATLANTIC	REFER TO SPECIFICATION	
102B	FLOOR PLAN - Level 1	1.AVC.03	AUDIO VIDEO CABINET	MIDDLE ATLANTIC	REFER TO SPECIFICATION	
102B	FLOOR PLAN - Level 1	1.CC1.03	CABLE ACCESS ENCLOSURE	EXTRON	CABLE CUBBY 500	
102B	FLOOR PLAN - Level 1	1.CP.01	CONTROL PROCESSOR	CRESTRON	CP4	
102B	FLOOR PLAN - Level 1	1.DSP.01	DIGITAL SIGNAL PROCESSOR	QSC	110F	
102B	FLOOR PLAN - Level 1	1.FP3.04	75" DISPLAY	LG	75UL3J-E	
102B	FLOOR PLAN - Level 1	1.FP3.05	75" DISPLAY	LG	75UL3J-E	
102B	FLOOR PLAN - Level 1	1.MIC.02	GOOSENECK CARDIOD MICROPHONE	SHURE	MICROFLEX MX418D/C	
102B	FLOOR PLAN - Level 1	1.MS1.02	MOTORIZED PROJECTOR SCREEN	DRAPER	ACCESSS E	
102B	FLOOR PLAN - Level 1	1.OP.02	8,000 LUMEN, 4K READY, LASER PROJECTOR	PANASONIC	PT-RCQ80	
102B	FLOOR PLAN - Level 1	1.RS.02	SCHEDULING PANEL	CRESTRON	SCHEDULING PANEL	
102B	FLOOR PLAN - Level 1	1.RS.03	SCHEDULING PANEL	CRESTRON	SCHEDULING PANEL	
102B	FLOOR PLAN - Level 1	1.SP2.13	PENDANT SPEAKER	JBL	CONTROL 64P/T	
102B	FLOOR PLAN - Level 1	1.SP2.14	PENDANT SPEAKER	JBL	CONTROL 64P/T	
102B	FLOOR PLAN - Level 1	1.SP2.15	PENDANT SPEAKER	JBL	CONTROL 64P/T	
102B	FLOOR PLAN - Level 1	1.SP2.16	PENDANT SPEAKER	JBL	CONTROL 64P/T	
102B	FLOOR PLAN - Level 1	1.SP2.17	PENDANT SPEAKER	JBL	CONTROL 64P/T	
102B	FLOOR PLAN - Level 1	1.SP2.18	PENDANT SPEAKER	JBL	CONTROL 64P/T	
102B	FLOOR PLAN - Level 1	1.SP2.19	PENDANT SPEAKER	JBL	CONTROL 64P/T	
102B	FLOOR PLAN - Level 1	1.SP2.20	PENDANT SPEAKER	JBL	CONTROL 64P/T	
102B	FLOOR PLAN - Level 1	1.SP2.21	PENDANT SPEAKER	JBL	CONTROL 64P/T	
102B	FLOOR PLAN - Level 1	1.SP2.22	PENDANT SPEAKER	JBL	CONTROL 64P/T	
102B	FLOOR PLAN - Level 1	1.SP2.23	PENDANT SPEAKER	JBL	CONTROL 64P/T	
102B	FLOOR PLAN - Level 1	1.SP2.24	PENDANT SPEAKER	JBL	CONTROL 64P/T	
102B	FLOOR PLAN - Level 1	1.TP1.03	TOUCH SCREEN	CRESTRON	TSW-1070-B-S	
102B	FLOOR PLAN - Level 1	1.TP2.03	TOUCH SCREEN	CRESTRON	TSW-1070-B-S	
102B	FLOOR PLAN - Level 1	1.VC.02	PTZ VIDEO CONFERENCE CAMERA	QSC NC SERIES	REFER TO SPECIFICATION	
102B	FLOOR PLAN - Level 1	1.VC.03	PTZ VIDEO CONFERENCE CAMERA	QSC NC SERIES	REFER TO SPECIFICATION	
102B	FLOOR PLAN - Level 1	1.VR.02	DIGITAL MEDIA TRANSMITTER	CRESTRON	DM-RMC-4KZ-SCALER-C	
102B	FLOOR PLAN - Level 1	1.VR.05	DIGITAL MEDIA RECEIVER	CRESTRON	DM-RMC-4KZ-SCALER-C	
102B	FLOOR PLAN - Level 1	1.VR.06	DIGITAL MEDIA RECEIVER	CRESTRON	DM-RMC-4KZ-SCALER-C	
102B	FLOOR PLAN - Level 1	1.VS.01	8X8 VIDEO MATRIX SWITCHER	CRESTRON	DM-MD8X8-CPU3	
102B	FLOOR PLAN - Level 1	1.VT.04	DIGITAL MEDIA TRANSMITTER	CRESTRON	DM-TX-4KZ-100-C-1G	
102B	FLOOR PLAN - Level 1	1.VT.05	WALL PLATE		REFER TO SPECIFICATION	
102B	FLOOR PLAN - Level 1	1.WM.01	WIRELESS MICROPHONE SYSTEM	SHURE	REFER TO SPECIFICATION	
102B	FLOOR PLAN - Level 1	1.WM.02	WIRELESS MICROPHONE SYSTEM	SHURE	REFER TO SPECIFICATION	
102B	FLOOR PLAN - Level 1	1.WVR.02	WIRELESS MEDIA RECEIVER	MERSIVE	REFER TO SPECIFICATION	
102B	FLOOR PLAN - Level 1	1.WVR.03	WIRELESS MEDIA RECEIVER	MERSIVE	REFER TO SPECIFICATION	

CONFERENCE ROOM 129						
ROOM NO.	LEVEL	DEVICE NO.	DESCRIPTION	MANUFACTURER	MODEL NO.	NOTES
129	FLOOR PLAN - Level 1	1.AV1.01	CRFB HOUSING	WIREMOLD	880CS2-NA	
129	FLOOR PLAN - Level 1	1.CC1.01	CABLE ACCESS ENCLOSURE	EXTRON	CABLE CUBBY 500	
129	FLOOR PLAN - Level 1	1.FP3.02	75" DISPLAY	LG	75UL3J-E	
129	FLOOR PLAN - Level 1	1.RS.01	SCHEDULING PANEL	CRESTRON	SCHEDULING PANEL	
129	FLOOR PLAN - Level 1	1.RS.04	SCHEDULING PANEL	CRESTRON	SCHEDULING PANEL	
129	FLOOR PLAN - Level 1	1.RS.05	SCHEDULING PANEL	CRESTRON	SCHEDULING PANEL	
129	FLOOR PLAN - Level 1	1.TP2.01	TOUCH SCREEN	LOGITECH	LOGITECH TAP	
129	FLOOR PLAN - Level 1	1.TP3.01	TOUCH SCREEN	CRESTRON	MPC3-302-W	
129	FLOOR PLAN - Level 1	1.VCB.01	VIDEO CONFERENCE BAR	LOGITECH	RALLY BAR	
129	FLOOR PLAN - Level 1	1.VR.01	DIGITAL MEDIA RECEIVER	CRESTRON	DM-RMC-4KZ-SCALER-C	
129	FLOOR PLAN - Level 1	1.VT.01	DIGITAL MEDIA TRANSMITTER	CRESTRON	DM-TX-4KZ-100-C-1G	
129	FLOOR PLAN - Level 1	1.WVR.01	WIRELESS MEDIA RECEIVER	MERSIVE	REFER TO SPECIFICATION	

SCHEDULE - GYM 130						
ROOM NO.	LEVEL	DEVICE NO.	DESCRIPTION	MANUFACTURER	MODEL NO.	NOTES
130	FLOOR PLAN - Level 1	1.FP2.01	65" DISPLAY	LG	65UH5J-H	
130	FLOOR PLAN - Level 1	1.FP2.02	65" DISPLAY	LG	65UH5J-H	
130	FLOOR PLAN - Level 1	1.FP2.03	65" DISPLAY	LG	65UH5J-H	
130	FLOOR PLAN - Level 1	1.SP1.01	CEILING SPEAKER	JBL	CONTROL 26CT	
130	FLOOR PLAN - Level 1	1.SP1.02	CEILING SPEAKER	JBL	CONTROL 26CT	

CYBER/NSOC 208						
ROOM NO.	LEVEL	DEVICE NO.	DESCRIPTION	MANUFACTURER	MODEL NO.	NOTES
208	FLOOR PLAN - Level 2	2.AV1.02	CRFB HOUSING	WIREMOLD	880CS2-NA	
208	FLOOR PLAN - Level 2	2.AV1.03	CRFB HOUSING	WIREMOLD	880CS2-NA	
208	FLOOR PLAN - Level 2	2.CC1.02	CABLE ACCESS ENCLOSURE	EXTRON	CABLE CUBBY 500	
208	FLOOR PLAN - Level 2	2.CC1.03	CABLE ACCESS ENCLOSURE	EXTRON	CABLE CUBBY 500	
208	FLOOR PLAN - Level 2	2.FP1.01	55" DISPLAY	LG	55UH5J-H	
208	FLOOR PLAN - Level 2	2.FP1.02	55" DISPLAY	LG	55UH5J-H	
208	FLOOR PLAN - Level 2	2.FP1.03	55" DISPLAY	LG	55UH5J-H	
208	FLOOR PLAN - Level 2	2.FP1.04	55" DISPLAY	LG	55UH5J-H	
208	FLOOR PLAN - Level 2	2.TP3.02	TOUCH SCREEN	LOGITECH	LOGITECH TAP	
208	FLOOR PLAN - Level 2	2.VR.02	DIGITAL MEDIA RECEIVER	CRESTRON	DM-RMC-4KZ-SCALER-C	
208	FLOOR PLAN - Level 2	2.VR.03	DIGITAL MEDIA RECEIVER	CRESTRON	DM-RMC-4KZ-SCALER-C	
208	FLOOR PLAN - Level 2	2.VR.04	DIGITAL MEDIA RECEIVER	CRESTRON	DM-RMC-4KZ-SCALER-C	
208	FLOOR PLAN - Level 2	2.VR.05	DIGITAL MEDIA RECEIVER	CRESTRON	DM-RMC-4KZ-SCALER-C	
208	FLOOR PLAN - Level 2	2.VT.02	DIGITAL MEDIA TRANSMITTER	CRESTRON	DM-TX-4KZ-100-C-1G	
208	FLOOR PLAN - Level 2	2.VT.03	DIGITAL MEDIA TRANSMITTER	CRESTRON	DM-TX-4KZ-100-C-1G	
208	FLOOR PLAN - Level 2	2.VT.04	DIGITAL MEDIA TRANSMITTER	CRESTRON	DM-TX-4KZ-100-C-1G	
208	FLOOR PLAN - Level 2	2.VT.05	DIGITAL MEDIA TRANSMITTER	CRESTRON	DM-TX-4KZ-100-C-1G	

CONFERENCE ROOM 221						
ROOM NO.	LEVEL	DEVICE NO.	DESCRIPTION	MANUFACTURER	MODEL NO.	NOTES
221	FLOOR PLAN - Level 2	2.AV1.01	CRFB HOUSING	WIREMOLD	880CS2-NA	
221	FLOOR PLAN - Level 2	2.CC1.01	CABLE ACCESS ENCLOSURE	EXTRON	CABLE CUBBY 500	
221	FLOOR PLAN - Level 2	2.FP4.01	86" DISPLAY	LG	86UL3J-E	
221	FLOOR PLAN - Level 2	2.RS.01	SCHEDULING PANEL	CRESTRON	SCHEDULING PANEL	
221	FLOOR PLAN - Level 2	2.TP2.01	TOUCH SCREEN	LOGITECH	LOGITECH TAP	
221	FLOOR PLAN - Level 2	2.TP3.01	TOUCH SCREEN	LOGITECH	LOGITECH TAP	
221	FLOOR PLAN - Level 2	2.VCB.01	VIDEO CONFERENCE BAR	LOGITECH	RALLY BAR	
221	FLOOR PLAN - Level 2	2.VR.01	DIGITAL MEDIA RECEIVER	CRESTRON	DM-RMC-4KZ-SCALER-C	
221	FLOOR PLAN - Level 2	2.VT.01	DIGITAL MEDIA TRANSMITTER	CRESTRON	DM-TX-4KZ-100-C-1G	
221	FLOOR PLAN - Level 2	2.WVR.01	WIRELESS MEDIA RECEIVER	MERSIVE	REFER TO SPECIFICATION	

VIDEO ROOM 313						
ROOM NO.	LEVEL	DEVICE NO.	DESCRIPTION	MANUFACTURER	MODEL NO.	NOTES
313	FLOOR PLAN - Level 3	3.FP1.03	55" DISPLAY	LG	55UH5J-H	
313	FLOOR PLAN - Level 3	3.FP1.04	55" DISPLAY	LG	55UH5J-H	

DIRECTOR'S OFFICE 311 & ASSISTANT DIRECTOR'S OFFICES 308 & 312						
ROOM NO.	LEVEL	DEVICE NO.	DESCRIPTION	MANUFACTURER	MODEL NO.	NOTES
308	FLOOR PLAN - Level 3	3.FP1.01	55" DISPLAY	LG	55UH5J-H	
309	FLOOR PLAN - Level 3	3.FP1.07	55" DISPLAY	LG	55UH5J-H	
311	FLOOR PLAN - Level 3	3.FP1.06	55" DISPLAY	LG	55UH5J-H	
312	FLOOR PLAN - Level 3	3.FP1.02	55" DISPLAY	LG	55UH5J-H	

CONFERENCE ROOM 310						
ROOM NO.	LEVEL	DEVICE NO.	DESCRIPTION	MANUFACTURER	MODEL NO.	NOTES
310	FLOOR PLAN - Level 3	3.AV1.01	CRFB HOUSING	WIREMOLD	880CS2-NA	
310	FLOOR PLAN - Level 3	3.CC1.01	CABLE ACCESS ENCLOSURE	EXTRON	CABLE CUBBY 500	
310	FLOOR PLAN - Level 3	3.FP4.01	86" DISPLAY	LG	86UL3J-E	
310	FLOOR PLAN - Level 3	3.RS.01	SCHEDULING PANEL	CRESTRON	SCHEDULING PANEL	
310	FLOOR PLAN - Level 3	3.TP2.01	TOUCH SCREEN	LOGITECH	LOGITECH TAP	
310	FLOOR PLAN - Level 3	3.TP3.01	TOUCH SCREEN	LOGITECH	LOGITECH TAP	
310	FLOOR PLAN - Level 3	3.VCB.01	VIDEO CONFERENCE BAR	LOGITECH	RALLY BAR	
310	FLOOR PLAN - Level 3	3.VR.01	DIGITAL MEDIA RECEIVER	CRESTRON	DM-RMC-4KZ-SCALER-C	
310	FLOOR PLAN - Level 3	3.VT.01	DIGITAL MEDIA TRANSMITTER	CRESTRON	DM-TX-4KZ-100-C-1G	
310	FLOOR PLAN - Level 3	3.WVR.01	WIRELESS MEDIA RECEIVER	MERSIVE	REFER TO SPECIFICATION	

TESTING HUDDLE 309						
ROOM NO.	LEVEL	DEVICE NO.	DESCRIPTION	MANUFACTURER	MODEL NO.	NOTES
309	FLOOR PLAN - Level 3	3.AV1.02	CRFB HOUSING	WIREMOLD	880CS2-NA	
309	FLOOR PLAN - Level 3	3.CC1.02	CABLE ACCESS ENCLOSURE	EXTRON	CABLE CUBBY 500	
309	FLOOR PLAN - Level 3	3.FP1.07	55" DISPLAY	LG	55UH5J-H	
309	FLOOR PLAN - Level 3	3.TP1.02	TOUCH SCREEN	LOGITECH	LOGITECH TAP	
309	FLOOR PLAN - Level 3	3.TP3.02	TOUCH SCREEN	LOGITECH	LOGITECH TAP	
309	FLOOR PLAN - Level 3	3.VCB.02	VIDEO CONFERENCE BAR	LOGITECH	RALLY BAR	
309	FLOOR PLAN - Level 3	3.VR.02	DIGITAL MEDIA RECEIVER	CRESTRON	DM-RMC-4KZ-SCALER-C	
309	FLOOR PLAN - Level 3	3.VT.02	DIGITAL MEDIA TRANSMITTER	CRESTRON	DM-TX-4KZ-100-C-1G	
309	FLOOR PLAN - Level 3	3.WVR.02	WIRELESS MEDIA RECEIVER	MERSIVE	REFER TO SPECIFICATION	

GENERAL NOTES:

1. TELECOMMUNICATIONS INFRASTRUCTURE SHALL BE INSTALLED IN ACCORDANCE WITH DIVISION 27
2. REFERENCE ELECTRICAL DRAWINGS FOR CONDUIT ROUGH INS
3. REFERENCE TELECOMMUNICATIONS DRAWINGS FOR NETWOK CABLING
4. SUBMIT SHOP DRAWING AS REQUIRED AND FOR APPROVAL PRIOR TO THE INSTALLATION OF ALL A/V EQUIPMENT
5. A/V EQUIPMENT LISTED IN AV SCHEDULE ARE SELECTED AS A BASIS OF DESIGN AS PER THE SPECIFICATIONS. CONTRACTOR SHALL SUBMIT DATASHEETS AND SHOP DRAWINGS FOR APPROVAL AS REQUIRED. ALTERNATE EQUIPMENT WILL BE REVIEWED FOR APPROVAL AS IT COMPARES TO THE BASIS OF DESIGN. THE FINAL ACCEPTANCE OF THE ALTERNATE PRODUCT IS THE SOLE DISCRETION OF THE CONSULT AND/OR OWNERS REPRESENTATIVE.

FSGROUP®
ARCHITECTS
16575 Village Drive
Houston Texas 77040
713 344 1752 PH
fsdesignbuild.com

PROJECT NAME

THE STATE OF TEXAS
FORT BEND COUNTY

INFORMATION TECHNOLGY BUILDING
EUGENE HEIMANN CIRCLE
FORT BEND COUNTY . RICHMOND . TEXAS

CONSULTANTS

PGA
ENGINEERS, INC
3838 N Sam Houston Pkwy E,
Suite 550
Houston, TX 77032
346.570.2418
pgaengineers.com
TBPE FIRM #12493

PROFESSIONAL SEAL

STATE OF TEXAS
JOHN GRUENWALD
100039
LICENSED
PROFESSIONAL ENGINEER
John Gruenwald
05/15/2024

ISSUED FOR

ISSUED FOR PROPOSALS AND PERMIT

REVISIONS

No.	DESCRIPTION	DATE

KEY PLAN

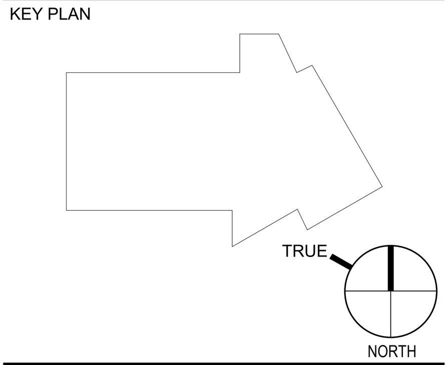

SHEET TITLE

AUDIO VIDEO - DEVICE SCHEDULES

SCALE

DATE
05/15/2024

PROJECT NUMBER
2319

SHEET NUMBER

TA-501

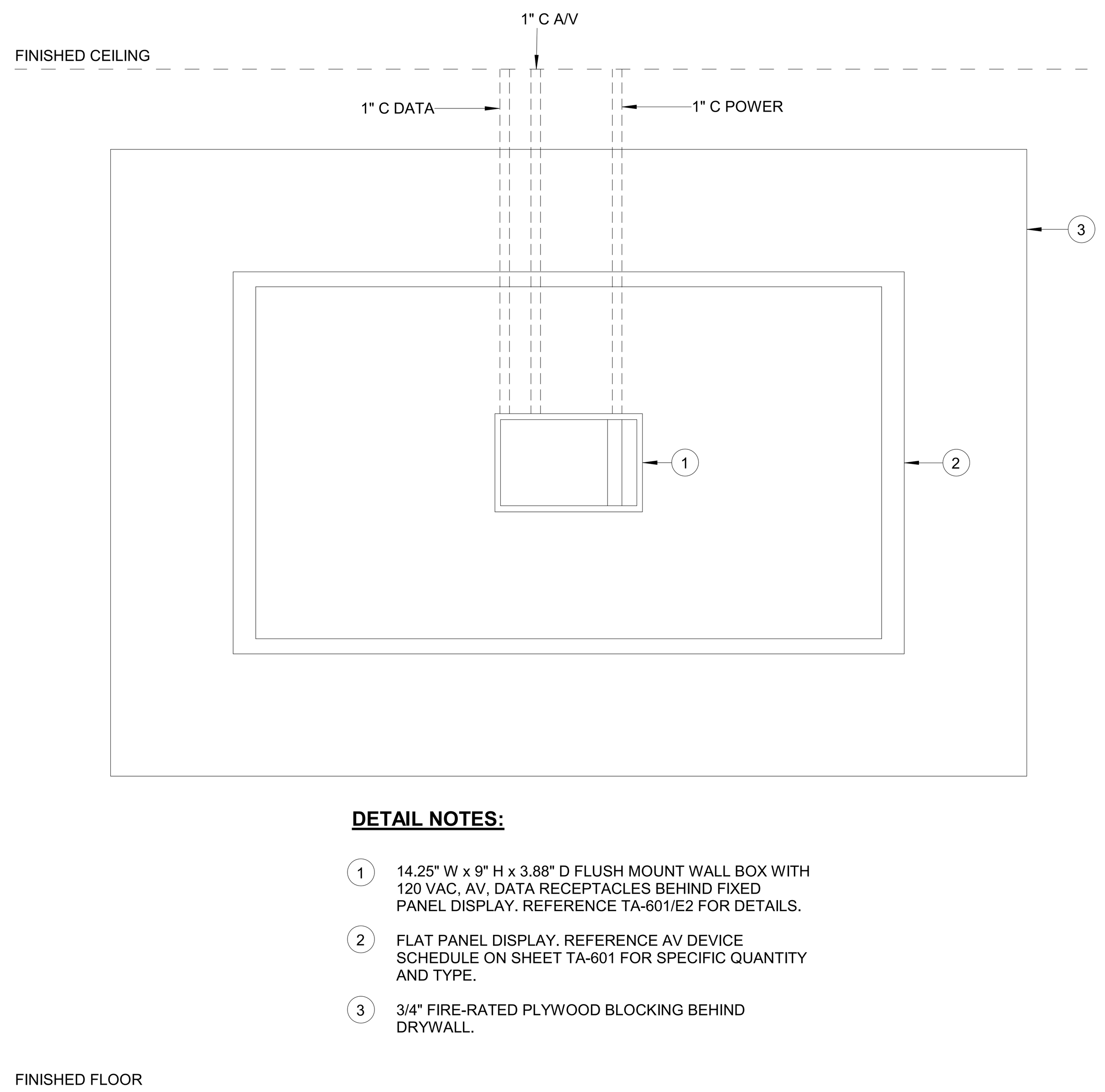

DETAIL NOTES:

1. 14.25" W x 9" H x 3.88" D FLUSH MOUNT WALL BOX WITH 120 VAC, AV, DATA RECEPTACLES BEHIND FIXED PANEL DISPLAY. REFERENCE TA-601/E2 FOR DETAILS.
2. FLAT PANEL DISPLAY. REFERENCE AV DEVICE SCHEDULE ON SHEET TA-601 FOR SPECIFIC QUANTITY AND TYPE.
3. 3/4" FIRE-RATED PLYWOOD BLOCKING BEHIND DRYWALL.

E3 FLAT PANEL DISPLAY
NTS

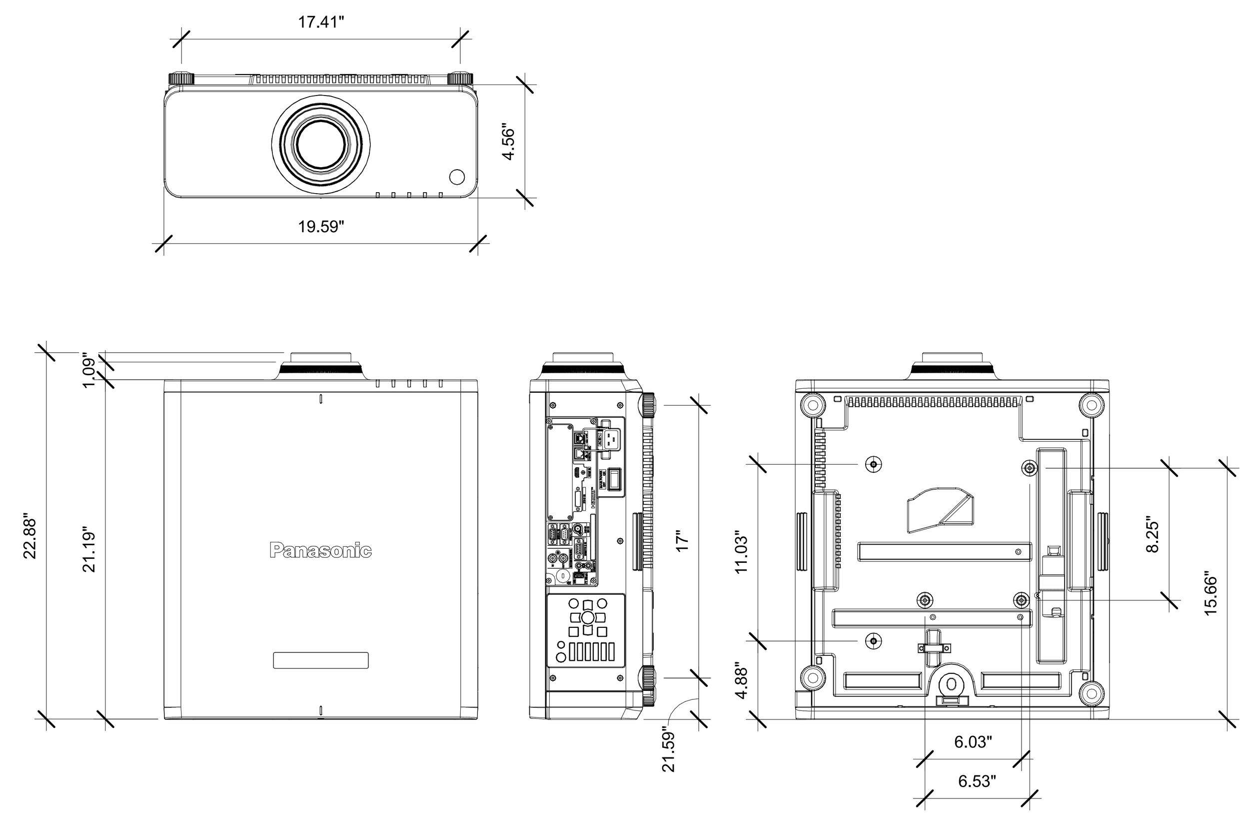

D3 OVERHEAD PROJECTOR (TYPICAL)
NTS

DETAIL NOTES:

1. REFERENCE FLOOR PLANS FOR REQUIRED WALL BOX CONNECTIONS.
2. COORDINATE COVER AND FINISH WITH ARCHITECT.
3. AV DEVICES BY AUDIO VIDEO SYSTEMS (DIV. 27)
   DATA BY TELECOM (DIV. 27).
   POWER BY ELECTRICAL (DIV. 26)
4. SUBMIT PRODUCT DATA FOR APPROVAL PRIOR TO PROCUREMENT AND INSTALLATION.

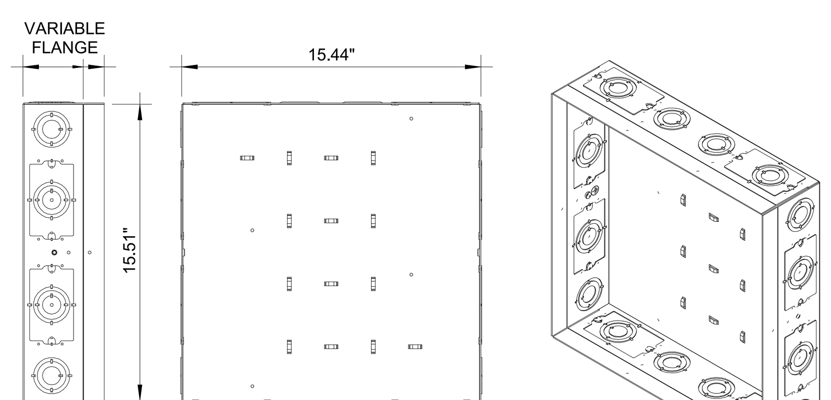

E2 DISPLAY BACK BOX
NTS

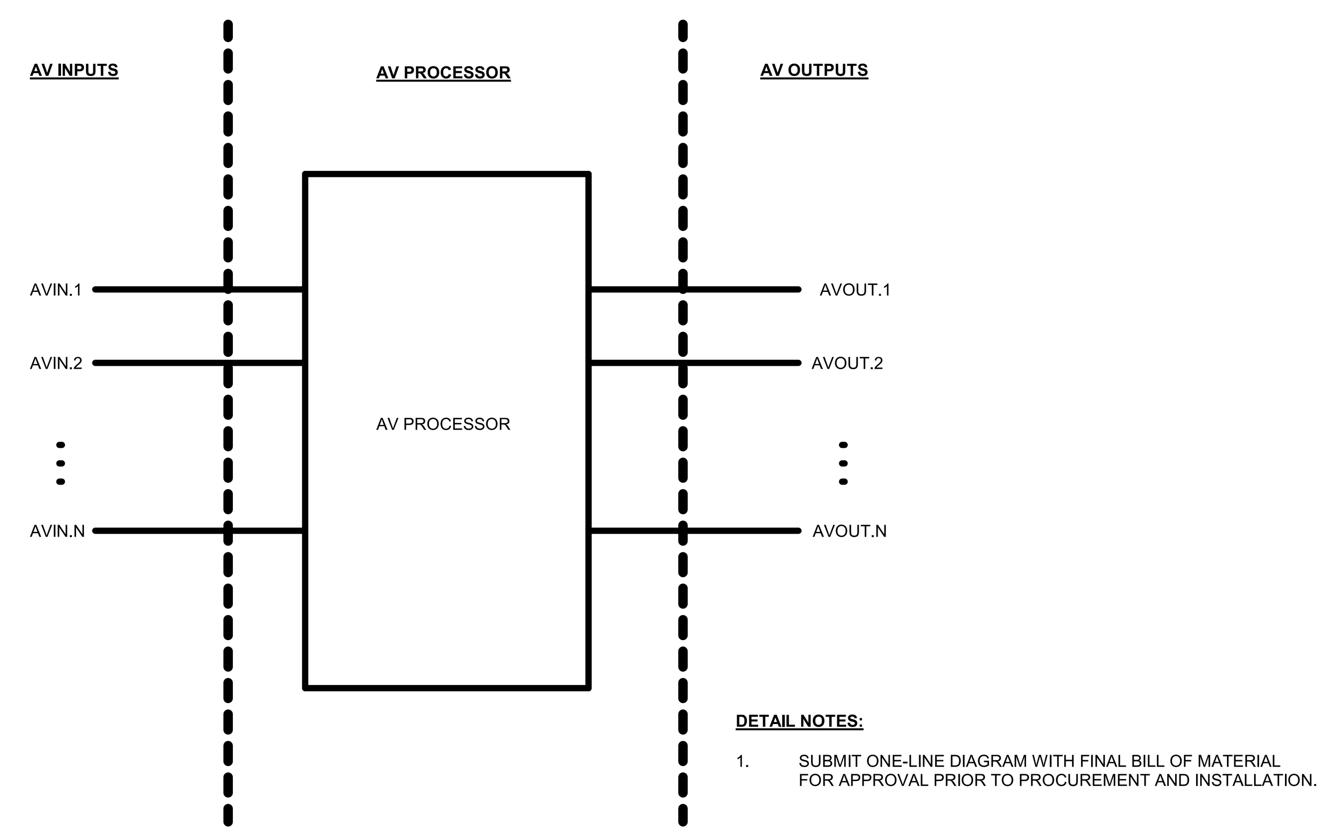

DETAIL NOTES:

1. SUBMIT ONE-LINE DIAGRAM WITH FINAL BILL OF MATERIAL FOR APPROVAL PRIOR TO PROCUREMENT AND INSTALLATION.

D2 AV CONCEPTUAL DIAGRAM
NTS

GENERAL NOTES:

1. TELECOMMUNICATIONS INFRASTRUCTURE SHALL BE INSTALLED IN ACCORDANCE WITH DIVISION 27
2. REFERENCE ELECTRICAL DRAWINGS FOR CONDUIT ROUGH INS
3. REFERENCE TELECOMMUNICATIONS DRAWINGS FOR NETWOK CABLING
4. SUBMIT SHOP DRAWING AS REQUIRED AND FOR APPROVAL PRIOR TO THE INSTALLATION OF ALL A/V EQUIPMENT
5. A/V EQUIPMENT LISTED IN AV SCHEDULE ARE SELECTED AS A BASIS OF DESIGN AS PER THE SPECIFICATIONS. CONTRACTOR SHALL SUBMIT DATASHEETS AND SHOP DRAWINGS FOR APPROVAL AS REQUIRED. ALTERNATE EQUIPMENT WILL BE REVIEWED FOR APPROVAL AS IT COMPARES TO THE BASIS OF DESIGN. THE FINAL ACCEPTANCE OF THE ALTERNATE PRODUCT IS THE SOLE DISCRETION OF THE CONSULT AND/OR OWNERS REPRESENTATIVE.

DETAIL NOTES:

1. REFERENCE FLOOR PLANS FOR REQUIRED FLOOR CONNECTIONS.
2. COORDINATE COVER AND FINISH WITH ARCHITECT.
3. DATA BY TELECOM (DIV. 27).
   POWER BY ELECTRICAL (DIV. 26)
4. POKE THORUGH TO SUPPORT UP TO 6 CAT6 FOR ICC CONSOLES (EACH CONSOLE TO GET 6 CAT6) AND TWO DEDICATED ELCTRICAL CIRCUITS PER CONSOLE.
5. LEGRAND 6STCP POKE THRU WITH 6ACT8A DATA INSERT PLATE. SUBMIT PRODUCT DATA FOR APPROVAL PRIOR TO PROCUREMENT AND INSTALLATION.

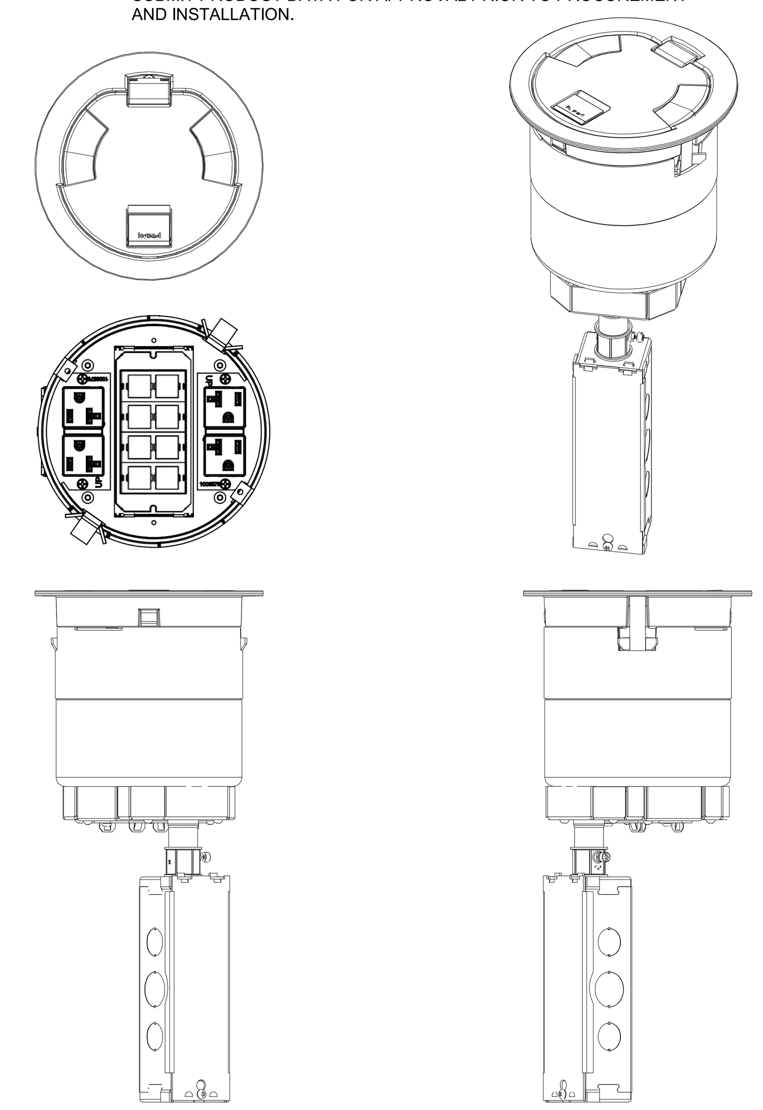

B2 A/V POKE THRU
3" = 1'-0"

DETAIL NOTES:

1. REFERENCE BLOCK DIAGRAM FOR REQUIRED FLOOR CONNECTIONS
2. COORDINATE COVER AND FINISH WITH ARCHITECT
3. POWER BY ELECTRICAL (DIV. 26). DATA BY TELECOM (DIV. 27). A/V BY AV CONTRACTOR (DIV. 27)
4. REFERENCE A/V SPECIFICATIONS FOR CABLE CUBBY MODULE TYPES AND QUANTITIES.

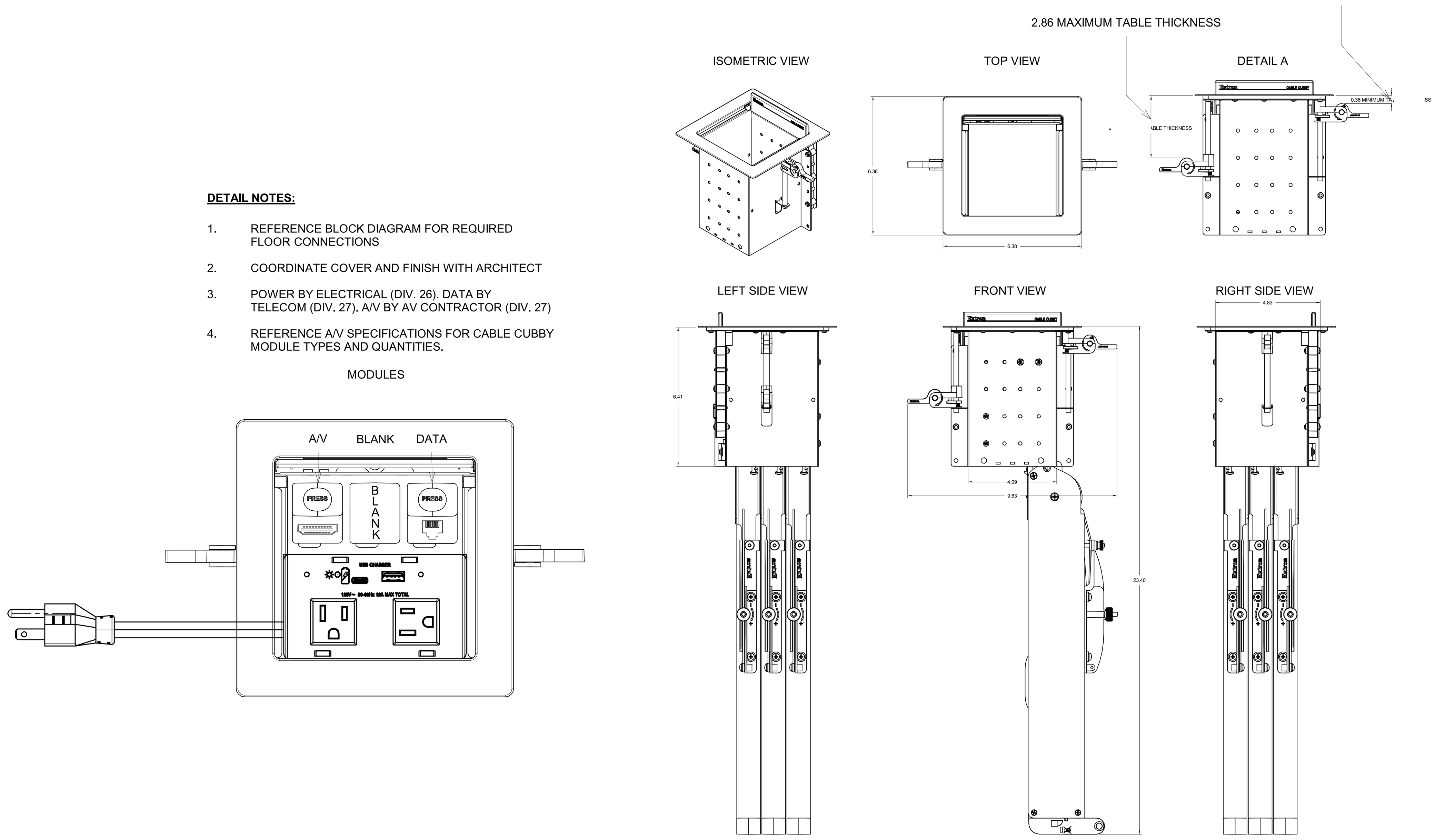

E1 AV CABLE CUBBY
NTS

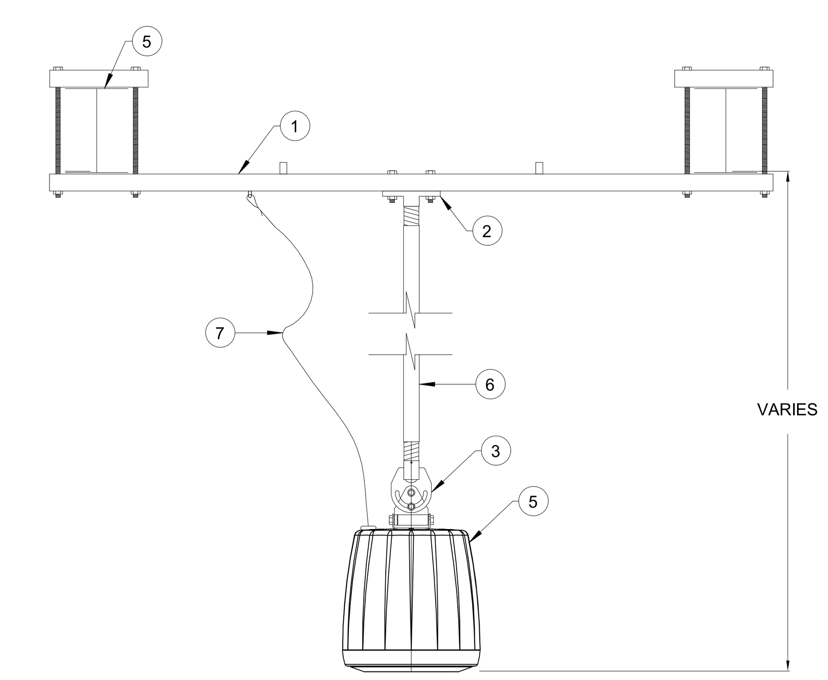

KEY NOTES:

1. COLD FORMED CHANNEL STRUT, 1 5/8", 12 GA, MAX LENGTH 10'. SUBMIT SHOP DRAWINGS TO STRUCTURAL ENGINEER FOR REVIEW AND APPROVAL PRIOR TO INSTALLATION.
2. STRUT ATTACHMENT, ADAPTIVE TECHNOLOGIES GROUP # MP-1.5 NPT-TA
3. MULTI-MOUNT, ADAPTIVE TECHNOLOGIES GROUP # MM-3RAX-120
4. (E) I BEAM, REFERENCE STRUCTURAL DRAWINGS
5. LOUD SPEAKER TYPE 2 (5.2lbs)
6. 1.5" SCH 40 THREADED PIPE, NPT, MAX 72".
7. SAFETY CABLE, 8'. ADAPTIVE TECHNOLOGIES GROUP # SC-188-96-SS.

C1 DETAILS - PENDANT MOUNT SPEAKER
NTS

FSGROUP ARCHITECTS
16575 Village Drive
Houston Texas 77040
713 344 1752 PH
fsdesignbuild.com

PROJECT NAME

INFORMATION TECHNOLGY BUILDING
EUGENE HEIMANN CIRCLE
FORT BEND COUNTY . RICHMOND . TEXAS

CONSULTANTS

PGA ENGINEERS, INC
3838 N Sam Houston Pkwy E.
Suite 550
Houston, TX 77032
346.570.2418
pgaengineers.com
TBPE FIRM #12493

PROFESSIONAL SEAL

STATE OF TEXAS
JOHN GRUENWALD
100039
LICENSED PROFESSIONAL ENGINEER
05/15/2024

ISSUED FOR

ISSUED FOR PROPOSALS AND PERMIT

REVISIONS

No.	DESCRIPTION	DATE

KEY PLAN

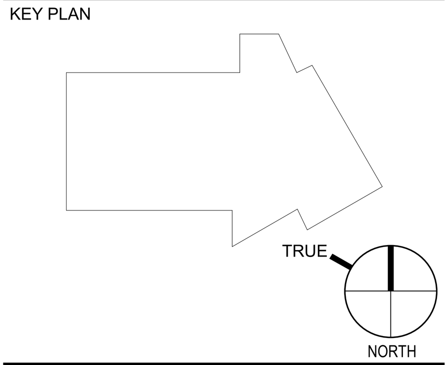

SHEET TITLE

AUDIO/VIDEO - DETAILS

SCALE: As indicated

DATE: 05/15/2024

PROJECT NUMBER: 2319

SHEET NUMBER

TA-601

GENERAL NOTES:

1. TELECOMMUNICATIONS INFRASTRUCTURE SHALL BE INSTALLED IN ACCORDANCE WITH DIVISION 27
2. REFERENCE ELECTRICAL DRAWINGS FOR CONDUIT ROUGH INS
3. REFERENCE TELECOMMUNICATIONS DRAWINGS FOR NETWOK CABLING
4. SUBMIT SHOP DRAWING AS REQUIRED AND FOR APPROVAL PRIOR TO THE INSTALLATION OF ALL A/V EQUIPMENT
5. A/V EQUIPMENT LISTED IN AV SCHEDULE ARE SELECTED AS A BASIS OF DESIGN AS PER THE SPECIFICATIONS. CONTRACTOR SHALL SUBMIT DATASHEETS AND SHOP DRAWINGS FOR APPROVAL AS REQUIRED. ALTERNATE EQUIPMENT WILL BE REVIEWED FOR APPROVAL AS IT COMPARES TO THE BASIS OF DESIGN. THE FINAL ACCEPTANCE OF THE ALTERNATE PRODUCT IS THE SOLE DISCRETION OF THE CONSULT AND/OR OWNERS REPRESENTATIVE.

DETAIL NOTES:

1. CUT CEILING TILE, PROVIDED BY OTHERS, USING THE TEMPLATE PROVIDED WITH SPEAKER.
2. DAISY CHAIN 70V SPEAKERS FROM THE AMPLIFIER TO TO EACH SPEAKER USING 18 GAUGE PLENUM RATED WIRE.
3. REMOVABLE LOCKING CONNECTOR IS PROVIDED WITH THE SPEAKER. PEAL BACK SPEAKER WIRE INSULATION 3/16 INCH. USE APPROPRIATE CRIMP TOOL FOR TERMINATING CABLE ENDS WITH FERRULES. INSERT WIRES AND TIGHTEN HOLD DOWN SCREW WITH FLATHEAD SCREWDRIVER BEFORE INSERTING INTO THE SPEAKER'S TERMINAL CUP.
4. TIGHTEN THE STRAIN RELIEF FITTING AND CLOSE TERMINAL COVER.

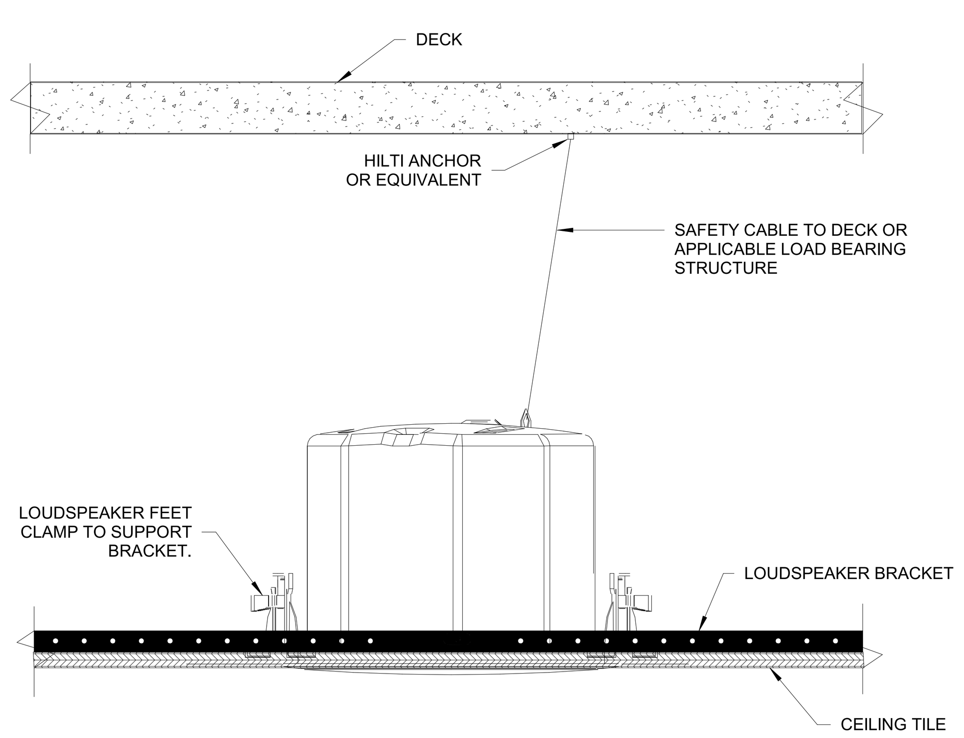

SIDE VIEW (NTS)

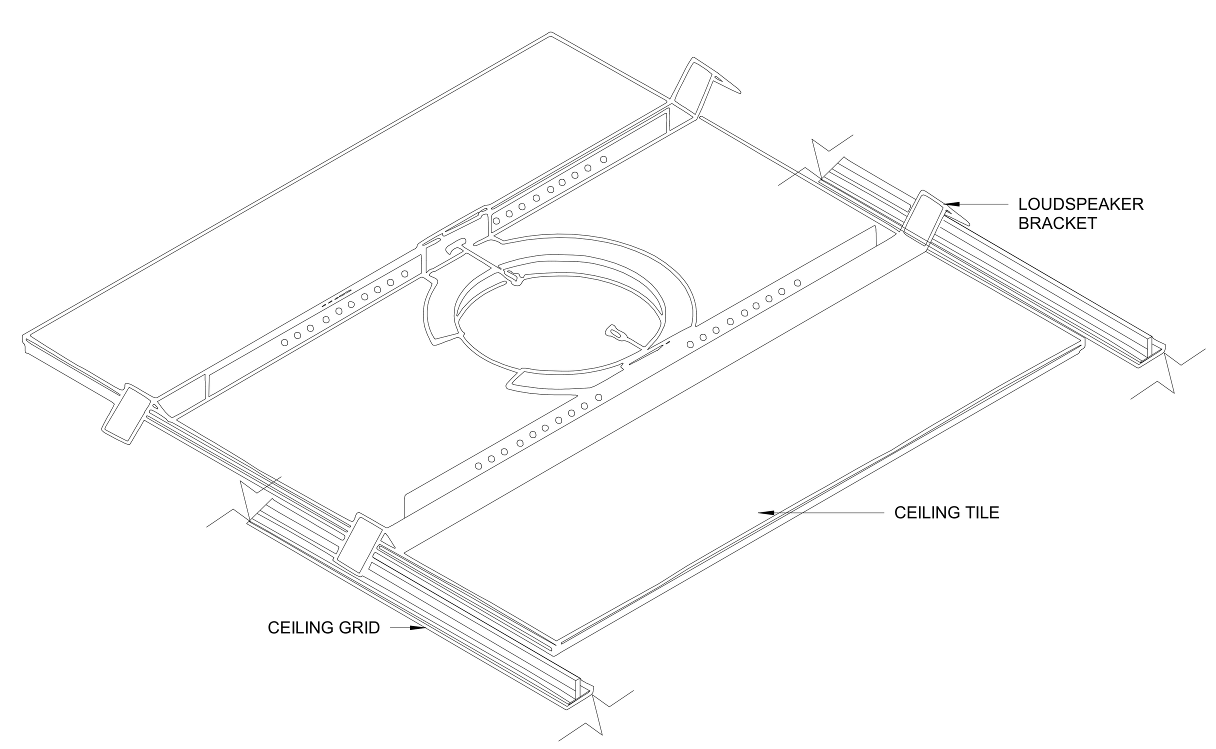

SUPPORT BRACKET ISO VIEW (NTS)

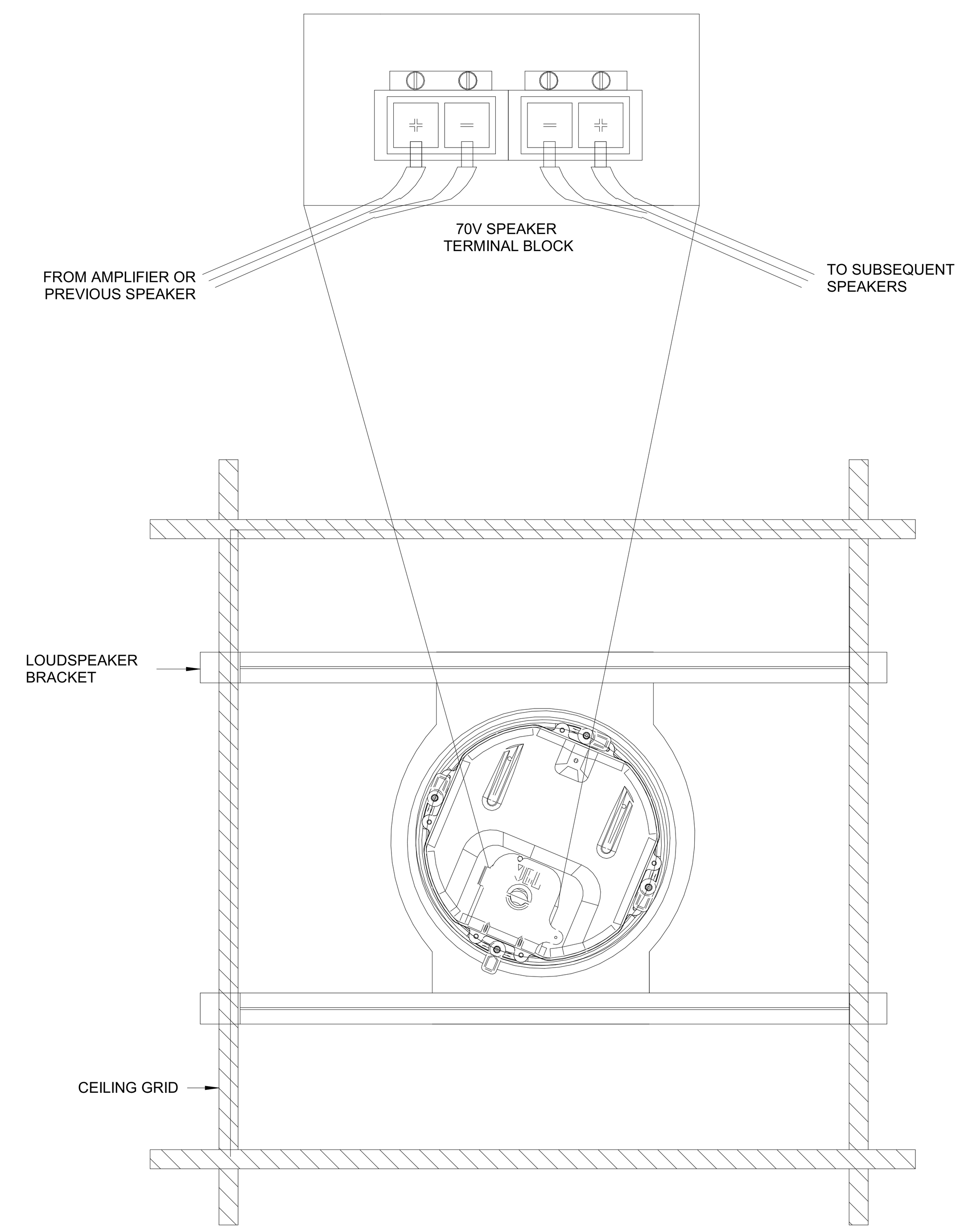

TOP VIEW (NTS)

E1 DETAILS - CEILING MOUNT SPEAKER
NTS

FSGROUP® ARCHITECTS
16575 Village Drive
Houston Texas 77040
713 344 1752 PH
fsdesignbuild.com

PROJECT NAME

THE STATE OF TEXAS
FORT BEND COUNTY

INFORMATION TECHNOLGY BUILDING
EUGENE HEIMANN CIRCLE
FORT BEND COUNTY . RICHMOND . TEXAS

CONSULTANTS

PGA
ENGINEERS, INC
3838 N Sam Houston Pkwy E,
Suite 550
Houston, TX 77032
346.570.2418
pgaengineers.com
TBPE FIRM #12493

PROFESSIONAL SEAL

STATE OF TEXAS
JOHN GRUENWALD
100039
LICENSED
PROFESSIONAL ENGINEER
05/15/2024

ISSUED FOR

ISSUED FOR PROPOSALS AND PERMIT

REVISIONS

No.	DESCRIPTION	DATE

KEY PLAN

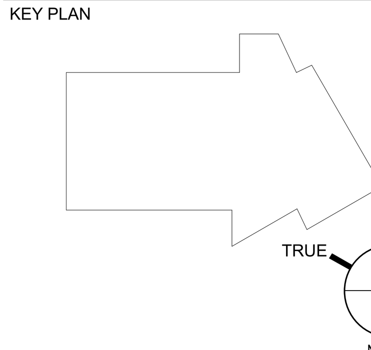

SHEET TITLE

AUDIO/VIDEO - DETAILS

SCALE
NTS

DATE
05/15/2024

PROJECT NUMBER
2319

SHEET NUMBER

TA-602

SECURITY EQUIPMENT SYMBOLS LIST

SYMBOL	DESCRIPTION
AED	DEFIBRILLATOR UNIT PROVIDED BY OTHERS. ALARM OUTPUT TERMINATED TO I-STAR BY SECURITY CONTRACTOR
APS	POWER SUPPLY FOR ISTAR PANELS
CPS	CAMERA POWER SUPPLY
CR	CARD READER
D	MAGNETIC DOOR SWITCH, FLUSH MTD.
D 2	MAGNETIC DOOR SWITCH - DOUBLE DOOR
D S	MAGNETIC DOOR SWITCH - SURFACE MTD. TO DOOR
D OH	MAGNETIC DOOR SWITCH - OVERHEAD DOOR
E L	EXIT PANIC DEVICE w/ ELECTRIC LOCK. PROVIDED UNDER DIV. 8, TERMINATED BY SECURITY CONTRACTOR.
E M	MAGNETIC LOCK. PROVIDED UNDER DIV. 8, TERMINATED BY SECURITY CONTRACTOR.
E ML	ELECTRIC MORTISE LOCK DPDT REX SWITCH. PROVIDED UNDER DIV. 8, TERMINATED BY SECURITY CONTRACTOR.
E LR	EXIT PANIC DEVICE - w/ DPDT REX SWITCH & ELECTRIC LATCH RETRACTION PROVIDED UNDER DIV. 8, TERMINATED BY SECURITY CONTRACTOR.
E S	ELECTRIC STRIKE PROVIDED UNDER DIV. 8, TERMINATED BY SECURITY CONTRACTOR.
EP	EXIT ONLY PANIC HARDWARE w/ REX SWITCH.
IC	INTERCOM SUBSTATION
IC M	INTERCOM MASTER SUBSTATION
#	REFER TO NOTE SCHEDULE ON SHEET AS INDICATED
DETAIL PAGE	REFER TO DETAIL AND SHEET AS INDICATED
DETAIL PAGE	REFER TO ELEVATION DETAIL AND SHEET AS INDICATED
TV	24" LED MONITOR WITH DVI INPUT
FACP	FIRE ALARM CONTROL PANEL (EXISTING - SHOWN FOR REFERENCE)
LPS	LOCK POWER SUPPLY
LAP	LOCAL ALARM PANEL w/ KEYSWITCH OVERRIDE
VDA	VIDEO DISTRIBUTION AMPLIFIER (VDA)
PoE-T	POWER OVER ETHERNET - TRANSMITTER
PoE-R	POWER OVER ETHERNET - RECEIVER
M	MOTION SENSOR (REQUEST-TO-EXIT)
M A	MOTION SENSOR - ALARM INPUT
DP	DUPRESS BUTTON - DESK MTD.
P	OSP CABLE SURGE PROTECTOR
DP B	DUPRESS BUTTON - WALL MTD. (UTPD)
PB	EXIT PUSH-BUTTON - WALL MTD.
T	TAMPER SWITCH
GO	GATE OPERATOR
TDL	TIME DELAYED EGRESS PANIC DEVICE - PROVIDED BY OTHER
F	FIRE ALARM PULL STATION W/ DPDT CONTACT
ACP	ACCESS CONTROL PANEL - ISTAR
KS OH	OVERHEAD DOOR KEYSWITCH
SEC	SECURITY TELEPHONE
FIX	FIXED CAMERA (DENOTES CAMERA LOCATION)
PTZ	PTZ CAMERA (DENOTES CAMERA LOCATION)
360	360 CAMERA (DENOTES CAMERA LOCATION)
180	180 CAMERA (DENOTES CAMERA LOCATION)
WK	WORKSTATION

ABBREVIATION

AC	ALTERNATING CURRENT POWER CONNECTION	NTS	NOT TO SCALE
ACP	ACCESS CONTROL PANEL	NVR	NETWORK VIDEO RECORDER
A.F.C.	ABOVE FINISHED CEILING	OPP	OPPOSITE
A.F.F.	ABOVE FINISHED FLOOR	OTDR	OPTICAL TIME DOMAIN REFLECTOMETER
A.F.G.	ABOVE FINISHED GRADE	P	POLE
B.F.C.	BELOW FINISHED CEILING	PB	PULL BOX
B.F.G.	BELOW FINISHED GRADE	PBX	PRIVATE BRANCH EXCHANGE (IN-HOUSE TELEPHONE SWITCH)
C.	CONDUIT	PED	PEDESTAL
CCVS	CLOSED CIRCUIT VIDEO SURVEILLANCE	R	READER
C.U.	CENTRAL OFFICE TELEPHONE LINE	REQ'D	REQUIRED
CPS	CAMERA POWER SUPPLY	REX	REQUEST-TO-EXIT
CPU	CENTRAL PROCESSING UNIT	RX	RECEIVE / RECEIVER
CR	CARD/KEY READER	SIM	SIMILAR
DA	DURESS (PERSONAL ASSIST) SWITCH	SM	SINGLE MODE
DPS	DOOR POSITION SWITCH	SPB	SECURITY PULLBOX
E	EXISTING	STC	SECURITY TERMINAL CABINET
EC	ELECTRICAL CONTRACTOR	TGB	TERMINAL GROUND BUSBAR
ELVC	ELEVATOR CONTRACTOR	TS	TURNSTILE
EXT	EXTERNAL	TYP	TYPICAL
EW	EACH WAY	TX	TRANSMIT / TRANSMITTER
F	FUTURE	UON	UNLESS OTHERWISE NOTED
FOPP	FIBER OPTIC PATCH PANEL	VAC	VOLTS ALTERNATING CURRENT
GA	GATE ARM	VDC	VOLTS DIRECT CURRENT
GC	GENERAL CONTRACTOR	VLAN	SECURITY LOCAL AREA NETWORK
GND	GROUND	W/	WITH
GPS	GLOBAL POSITIONING SYSTEM	W/O	WITHOUT
GRC	GALVANIZED RIGID CONDUIT	WP	WEATHER PROOF
IC	INTERCOM FIELD STATION	WS	WORKSTATION
ICS	INTERCOM SYSTEM	XFMR	TRANSFORMER
J	JUNCTION BOX	(E)	EXISTING, TO REMAIN
LAN	LOCAL AREA NETWORK	(N)	NEW
LPS	LOW VOLTAGE POWER SUPPLY	(R)	EXISTING, TO BE REMOVED AND REPLACED, AS SPECIFIED
MD	MOTION DETECTOR	(X)	EXISTING, TO BE REMOVED
MFG	MANUFACTURER	(SL)	SLIDING GATE
MM	MULTIMODE		
N/A	NOT APPLICABLE		
NC	NORMALLY CLOSED		
NO	NORMALLY OPEN		
N.I.C.	NOT IN CONTRACT		

SECURITY CABLE DESIGNATION/TYPE *

DESIGNATION	DESCRIPTION	USAGE	PART # (RISER)	PART # (PLENUM)
A	SECURITY COMPOSITE CABLE (4C, 18 AWG 16/30 STR, SHIELDED; 3 PR, 22 AWG 7/30 STR, SHIELDED; 2C, 22 AWG 7/30 STR, SHIELDED; 4C, 22 AWG 7/30 STR, SHIELDED)	DOOR STRIKE, CARD READER, DOOR CONTACT, REQUEST-TO-EXIT	BELDEN 558AFJ	BELDEN 658AFJ
B	1 PAIR 22 AWG SHIELDED	ALARM MONITORING	BELDEN 5500FE	BELDEN 6500FE
C	3 PAIR 22 AWG SHIELDED	CARD READER	BELDEN 5542FE	BELDEN 6542FE
D	2 PAIR 20 AWG SHIELDED	MOTION DETECTOR, BEAM DETECTORS	BELDEN 5441FE	BELDEN 6441FE
E	2/C 18 AWG SHIELDED	HORN	BELDEN 5300FE	BELDEN 6300FE
F	4 CONDUCTOR, 22 AWG, (7X30) STRANDED	DURESS BUTTON	BELDEN 5502FE	BELDEN 6502FE
G	1 PAIR 20 AWG TWISTED	INTERCOM	BELDEN 5400FE	BELDEN 6400FE
H	1 PAIR TWISTED SH 18 AWG PLUS 2/C 18 AWG	EMERGENCY PHONE	BELDEN 5302GE	-
I	CCTV COMPOSITE CABLE 2C 18 AWG, UNSHIELDED, CABLE ETHERNET, RG59	CAM PWR, UTP/IP VIDEO ANALOG VIDEO CONNECT K112	BELDEN 500PTZ	BELDEN 600PTZ
J	ENHANCED CAT-6 BONDED-PAIR UTP	NETWORK AND CAMERA	BELDEN 7881A	BELDEN 7882A
K	2/C 18 AWG	CAMERA PWR, PUSH BUTTON, LOCK PWR	BELDEN 5300UE	BELDEN 6300UE
L	2 PAIR 22 AWG SHIELDED	DATA, CCVS PTZ CONTROL	BELDEN 5541FE	BELDEN 6541FE

* THIS TABLE IS REFERENCED AND IS SHOWN AS AN EXAMPLE OF ACCEPTABLE CABLE DESIGNATIONS. CONTRACTOR SHALL UTILIZE CABLE DESIGNATION TABLE FOR SHOP DRAWING AND RECORD DRAWING SUBMITTALS.

CCVS SYSTEM NOTES

1. ALL OUTDOOR CAMERAS, TERMINATION BOXES, AND PULLBOXES SHALL BE INSTALLED WITH WEATHER RESISTANT HARDWARE.
2. PROVIDE ALL INTEGRATION WITH ALARM ACCESS CONTROL SYSTEM COMPONENTS AND SECURITY COMMUNICATIONS SYSTEM.
3. PROVIDE ALL COORDINATION WITH OTHER DISCIPLINES FOR INSTALLATION OF EQUIPMENT.
4. COORDINATE ALL SITE WORK WITH OWNER'S REP.
5. DRAWINGS INDICATE CAMERA 'HOME POSITIONS'. VERIFY FIELD OF VIEW WITH MDACC AND DESIGN CONSULTANT DURING INSTALLATION. SUBSTITUTION OF LENS TYPE & SIZE TO ACCOMPLISH INTENDED FIELD OF VIEW SHALL BE AT NO ADDITIONAL COST.
6. CAMERAS MAY INCLUDE MULTIPLE TRANSMISSION METHODS. VERIFY EACH CAMERA PRIOR TO INSTALLATION.
7. FIELD VERIFY ALL CAMERA LOCATIONS PROIR TO INSTALLATION. CAMERA MAY BE RELOCATED WITHIN 25' OF LOCATION SHOWN ON FLOOR PLANS WITHOUT ADDITIONAL COST.

ACS SYSTEM NOTES

1. ALL OUTDOOR MOUNTED CARD READERS SHALL BE INSTALLED WITH WEATHER RESISTANT AND TAMPER PROOF HARDWARE.
2. CARD READER PEDESTALS SHALL BE SIZED FOR VOICE COMMUNICATIONS.
3. PROVIDE ALL INTEGRATION WITH CLOSED CIRCUIT VIDEO SURVEILLANCE COMPONENTS AND SECURITY COMMUNICATION SYSTEM.
4. PROVIDE ALL COORDINATION WITH OTHER DISCIPLINES FOR INSTALLATION OF EQUIPMENT.
5. COORDINATE ALL SITE WORK WITH OWNERS REP.

SECURITY COMMUNICATION SYSTEM

1. ALL OUTDOOR STATIONS SHALL BE INSTALLED WITH WEATHER RESISTANT AND TAMPER PROOF HARDWARE.
2. PROVIDE ALL INTEGRATION WITH CLOSED CIRCUIT VIDEO SURVEILLANCE (CCVS) SYSTEM AND ACS.
3. COORDINATE WITH OWNER PROVISION OF TELEPHONE CIRCUIT FOR THE COMMUNICATION STATIONS.
4. PROVIDE ALL COORDINATION WITH OTHER DISCIPLINES FOR INSTALLATION OF EQUIPMENT.
5. COORDINATE ALL SITE WORK WITH OWNERS REP.

GENERAL NOTES

1. THE FOLLOWING GENERAL NOTES ARE APPLICABLE AS STATED BELOW, EXCEPT WHERE SPECIFICALLY INDICATED OTHERWISE, ON THE DRAWINGS OR IN THE BID SPECIFICATION.
2. SINGLE LINE DIAGRAMS, SCHEMATICS, DETAILS AND CONDUIT PATHS SHOWN HEREIN ARE CONCEPTUAL AND ILLUSTRATE ONLY THE FUNCTIONAL RELATIONSHIPS BETWEEN COMPONENTS OF THE SYSTEM. ACCORDINGLY, FULL SHOP DRAWING DEVELOPMENT IS REQUIRED TO REALIZE THE SPECIFIED FUNCTIONS.
3. DEVICE LOCATIONS ON PLANS ARE CONCEPTUAL. LOCATE AS SITE CONDITIONS REQUIRE AND AS APPROVED BY THE OWNER.
4. REFER TO THE BID SPECIFICATION FOR ADDITIONAL REQUIREMENTS REGARDING THIS WORK.
5. INSTALL WALL MOUNTED CARD READERS, PUSH BUTTON SWITCHES, KEYPADS, KEY SWITCHES AND OTHER WALL MOUNTED FIELD DEVICES, AT 48 INCHES MAXIMUM ABOVE FINISHED FLOOR, UNLESS OTHERWISE NOTED. MOUNTING HEIGHT SHALL COMPLY WITH TEXAS ACCESSIBILITY STANDARD (TAS).
6. PROVIDE PAINTING, PATCHING AND FINISHES, OF MATERIALS AND DEVICES, AS APPROVED BY THE OWNER.
7. DOOR DETAILS ILLUSTRATE FUNCTIONAL RELATIONSHIPS. ACTUAL ARCHITECTURAL CONDITIONS (SUCH AS DIRECTION OF SWING AND HAND OF DOOR) MAY VARY.
8. WORK AND MATERIALS TO CONFORM TO THE MOST CURRENT UNIFORM STANDARD SPECIFICATIONS, ASSOCIATED CODES REFERENCED BY THE (AHJ) AUTHORITY HAVING JURISDICTION, AND DETAILS FOR CONSTRUCTION, AS FURNISHED BY THE OWNER. WORK AND MATERIALS, NOT IN CONFORMANCE WITH PROJECT SPECIFICATIONS AND DETAILS, ARE SUBJECT TO REMOVAL AND REPLACEMENT AT THE CONTRACTOR'S EXPENSE.
9. FOR INFORMATION REGARDING FIRE RATINGS AND OCCUPANCY SEPARATIONS, REFER TO ARCHITECTURAL PLANS AND SPECIFICATIONS.
10. NEW CONDUIT CONNECTIONS TO INCLUDE INTEGRAL PROTECTIVE BUSHINGS OR CHASE NIPPLES.
11. NEW CONDUIT FOR FUTURE USE TO BE FILLED WITH 200 POUND STRENGTH PULL LINE. PROVIDE LABELING ON EACH END OF THE PULL LINE TO INDICATE LOCATION OF OTHER END.
12. NEW CONDUITS SHALL BE CONCEALED WHENEVER POSSIBLE. SURFACE MOUNTED CONDUITS ARE PERMISSIBLE ONLY WHERE APPROVED. USE ONLY CONCEALED CONDUITS WITHIN FINISHED SPACES. THE ABOVE STANDARDS ALSO APPLY TO EXTERIOR SPACES. SEEK APPROVAL FROM THE OWNER FOR EACH AREA WHERE SURFACE CONDUIT IS NECESSARY.
13. JUNCTION BOXES SHALL BE MINIMUM 4 INCH SQUARE DEEP STYLE, SIZED AS REQUIRED TO ACCOMMODATE CONDUITS UNLESS OTHERWISE NOTED. PROVIDE MOUNTING RING AS REQUIRED. PROVIDE A BLANK COVER PLATE FOR JUNCTION BOXES AND PULL BOXES WITH NO DEVICE.
14. EXPOSED BOXES AND PANELS, MOUNTED IN OR ON EXTERIOR WALLS, TO BE NEMA 4.
15. NEW CONDUIT TO BE 3/4 INCH EMT MINIMUM, UNLESS OTHERWISE NOTED. EXTERIOR CONDUIT TO BE RIGID.
16. USE 120VAC CIRCUITS UNLESS OTHERWISE NOTED. VERIFY CURRENT LOAD ON EXISTING CIRCUITS BEFORE CONNECTING NEW LOADS. COORDINATE WITH OWNER IF ADDITIONAL CIRCUITS ARE REQUIRED.
17. CONTRACTOR TO VERIFY CONDUIT AND PLENUM CABLE PATHS INDICATED ON THE DRAWINGS. CONTRACTOR MAY PROPOSE ALTERNATE ROUTING WHERE CONFLICTS ARE FOUND.
18. CONTRACTOR IS RESPONSIBLE FOR CEILING INTEGRITY, THIS INCLUDES ROUTING ABOVE CONCEALED SPLINE INTERLOCKING TILES.
19. CONTRACTOR TO OBTAIN RECERTIFICATION FOR FIRE RATED DOOR FRAME AND DOOR MODIFIED BY THIS PROJECT.
20. ACCESS CONTROL LOW VOLTAGE WIRING TO BE PLENUM RATED.
21. DO NOT EXCEED 180° IN AGGREGATE CONDUIT BENDS WITHOUT PULLBOX.
22. PROVIDE GROUND BUSHING ON ALL CONDUIT END IN EQUIPMENT ROOM. BOND TO APPROVED BUILDING GROUND.
23. LABEL CONDUIT EVERY 50' WITH DEVICE ID & EQUIPMENT ROOM ID WITH PERMANENT INK CABLE MADE WITH LASER CABLE MAKER. SECURE TO CONDUIT WITH CLEAR TAPE.
24. ALL WALL AND FLOOR PENETRATIONS SHALL BE SEALED WITH APPROVED FIRE STOP.
25. ALL CABLES NOT IN CONDUIT ABOVE DROP CEILING SHALL BE INSTALLED IN MIN, 1" J-HOOK EVERY 5'-8". DO NOT EXCEED 40% FILL.
26. LABEL CABLE NOT IN CONDUIT EVERY 50' WITH DEVICE ID & EQUIPMENT ROOM ID. USE PERMANENT INK LABEL MAKER. SECURE TO CABLE WITH CLEAR TAPE.
27. LOCATE DEVICES AS SITE CONDITIONS REQUIRE.
28. FIELD VERIFY ALL DIMENSIONS.
29. REFER TO THE SPECIFICATION FOR ADDITIONAL REQUIREMENTS REGARDING THIS WORK. CONTRACTOR TO PREPARE PROPOSAL FOR EACH DISCIPLINE. PROVIDE COORDINATION BETWEEN DISCIPLINES FOR CONSTRUCTION.
30. NOTIFY DESIGN CONSULTANT AND OWNER WHERE EXISTING CONDITIONS REQUIRE REPAIR PRIOR TO INSTALLATION.
31. COORDINATE ALL WORK WITH GENERAL CONTRACTOR.
32. ALL CABLE PULLS WITHIN EXISTING AND NEW CONDUITS TO BE MADE AT SAME TIME.
33. COORDINATE WITH FIRE ALARM CONTRACTOR TO MAKE CONNECTION TO ACCESS CONTROL SYSTEM FOR CARD READER CONTROLLED AND ELECTRICALLY LOCK DOOR RELEASE. FIRE ALARM RELAY SHALL BE BY FIRE ALARM CONTRACTOR. CONNECTIVITY TO ACCESS CONTROL PANEL SHALL BE BY SECURITY CONTRACTOR.

CONDUIT DESIGNATION KEY

(2) 1" C

QUANTITY OF CONDUITS (IF MORE THAN 1)

CONDUIT SIZE (MINIMUM)

CONDUIT

DEVICE DESIGNATION KEY

1. C 01

1 = LEVEL 1
2 = LEVEL 2
3 = LEVEL 3
S = SITE

C=CAMERA
R=CARD READER
CR=CABINET CARD READER
A=ALARM DEVICE
W=WORKSTATION
S=INTERCOM

DEVICE COUNT

SHEET INDEX

FSGROUP ARCHITECTS
16575 Village Drive
Houston Texas 77040
713 344 1752 PH
fsdesignbuild.com

PROJECT NAME

THE STATE OF TEXAS FORT BEND COUNTY

INFORMATION TECHNOLGY BUILDING
EUGENE HEIMANN CIRCLE
FORT BEND COUNTY . RICHMOND . TEXAS

CONSULTANTS

PGA ENGINEERS, INC
3838 N Sam Houston Pkwy E,
Suite 550
Houston, TX 77032
346.570.2418
pgaengineers.com
TBPE FIRM #12493

PROFESSIONAL SEAL

STATE OF TEXAS
JOHN GRUENWALD
100039
LICENSED
PROFESSIONAL ENGINEER
05/15/2024

ISSUED FOR

ISSUED FOR PROPOSALS AND PERMIT

REVISIONS

No.	DESCRIPTION	DATE

KEY PLAN

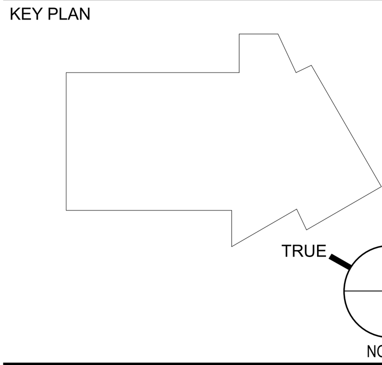

SHEET TITLE

SECURITY - LEGEND AND NOTES

SCALE

DATE 05/15/2024

PROJECT NUMBER 2319

SHEET NUMBER

TY-000

GENERAL NOTES:

1. REFER TO GENERAL NOTES, SYMBOLS, AND ABBREVIATIONS SHEETS FOR ADDITIONAL INFORMATION.
2. COORDINATE EQUIPMENT INSTALLATION INSIDE IDF ROOMS WITH IT PROJECT MANAGER.
3. ALL LOW VOLTAGE CABLING SHALL BE INSTALLED IN ACCORDANCE WITH DIVISION 27 SPECIFICATIONS.

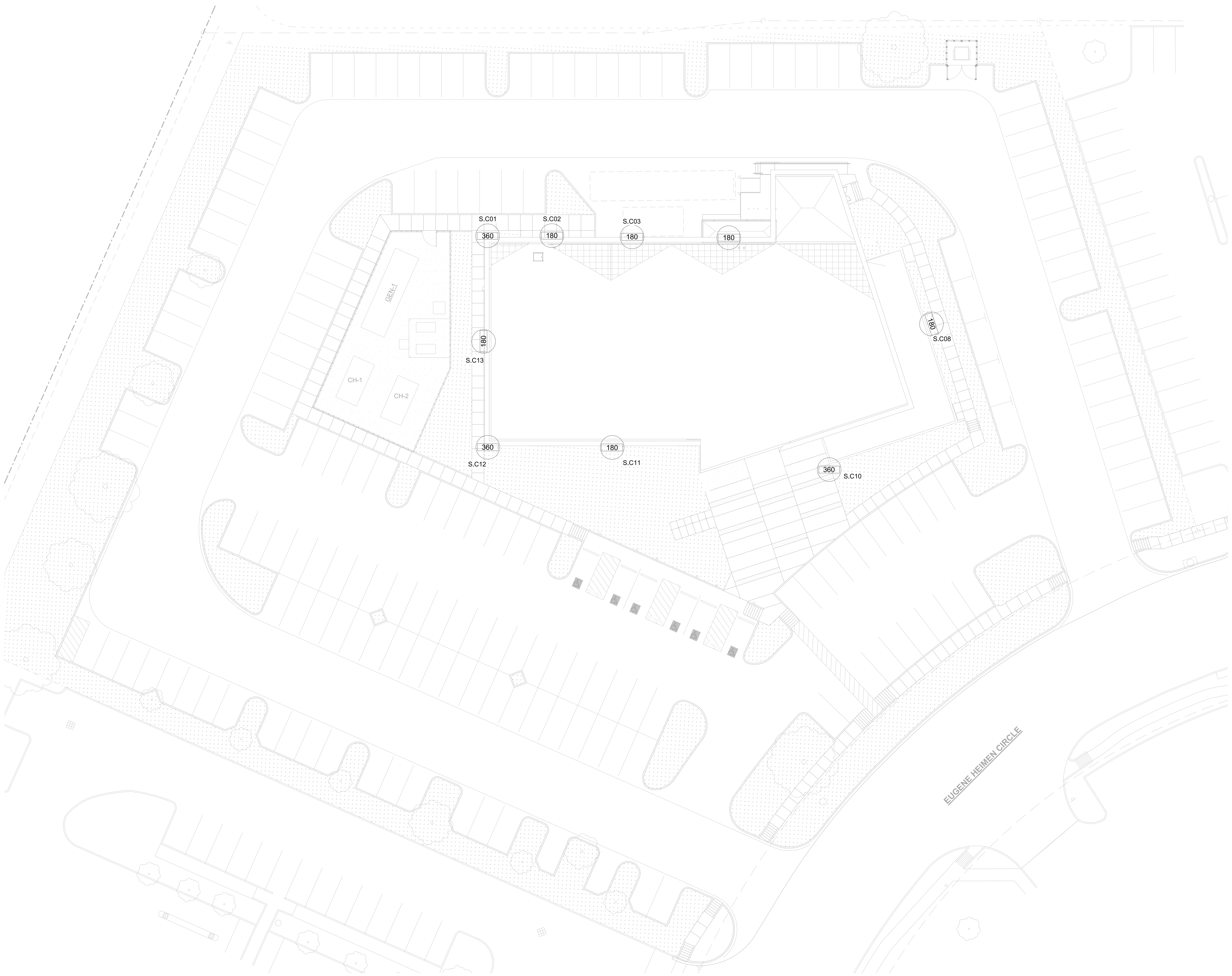

E1 SECURITY - SITE PLAN
1" = 20'-0"

FSGROUP ARCHITECTS
16575 Village Drive
Houston Texas 77040
713 344 1752 PH
fsdesignbuild.com

PROJECT NAME

THE STATE OF TEXAS FORT BEND COUNTY

INFORMATION TECHNOLGY BUILDING
EUGENE HEIMANN CIRCLE
FORT BEND COUNTY . RICHMOND . TEXAS

CONSULTANTS

PGA ENGINEERS, INC
3838 N Sam Houston Pkwy E,
Suite 550
Houston, TX 77032
346.570.2418
pgaengineers.com
TBPE FIRM #12493

PROFESSIONAL SEAL

STATE OF TEXAS
JOHN GRUENWALD
100039
LICENSED
PROFESSIONAL ENGINEER
05/15/2024

ISSUED FOR

ISSUED FOR PROPOSALS AND PERMIT

REVISIONS

No.	DESCRIPTION	DATE

KEY PLAN

TRUE NORTH

SHEET TITLE

SECURITY - SITE PLAN

SCALE 1" = 20'-0"

DATE 05/15/2024

PROJECT NUMBER 2319

SHEET NUMBER

TY-100

GENERAL NOTES:

1. REFER TO GENERAL NOTES, SYMBOLS, AND ABBREVIATIONS SHEETS FOR ADDITIONAL INFORMATION.
2. COORDINATE EQUIPMENT INSTALLATION INSIDE IDF ROOMS WITH IT PROJECT MANAGER.
3. ALL LOW VOLTAGE CABLING SHALL BE INSTALLED IN ACCORDANCE WITH DIVISION 27 SPECIFICATIONS.

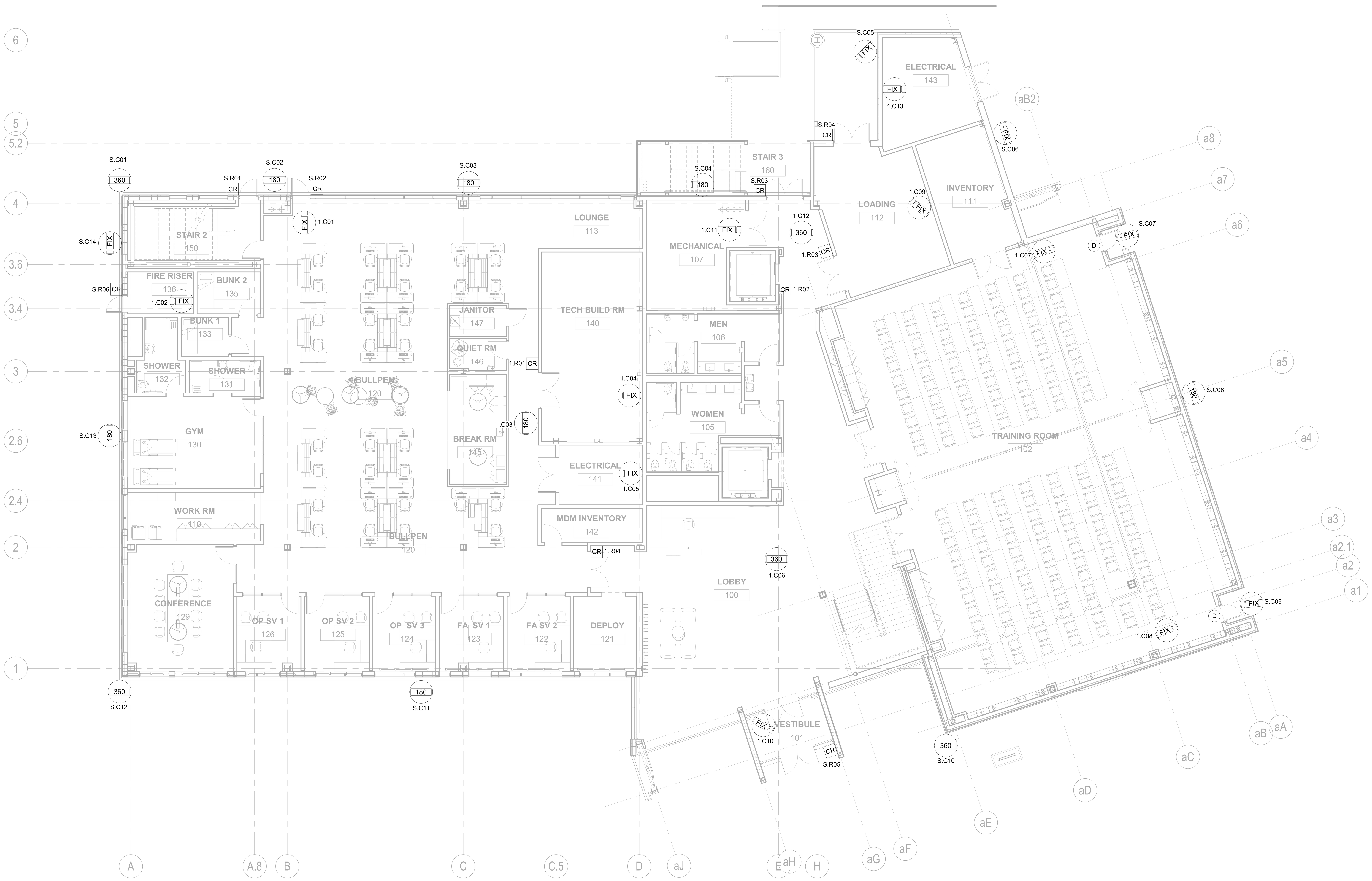

1 SECURITY - FLOOR PLAN - LEVEL 1
1/8" = 1'-0"

FSGROUP ARCHITECTS
16575 Village Drive
Houston Texas 77040
713 344 1752 PH
fsdesignbuild.com

PROJECT NAME

THE STATE OF TEXAS · FORT BEND COUNTY

INFORMATION TECHNOLGY BUILDING
EUGENE HEIMANN CIRCLE
FORT BEND COUNTY . RICHMOND . TEXAS

CONSULTANTS

PGA ENGINEERS, INC
3838 N Sam Houston Pkwy E,
Suite 550
Houston, TX 77032
346.570.2418
pgaengineers.com
TBPE FIRM #12493

PROFESSIONAL SEAL

STATE OF TEXAS
JOHN GRUENWALD
100039
LICENSED
PROFESSIONAL ENGINEER
05/15/2024

ISSUED FOR

ISSUED FOR PROPOSALS AND PERMIT

REVISIONS

No.	DESCRIPTION	DATE

KEY PLAN

TRUE NORTH

SHEET TITLE

SECURITY - FLOOR PLAN - LEVEL 1

SCALE 1/8" = 1'-0"

DATE 05/15/2024

PROJECT NUMBER 2319

SHEET NUMBER

TY-101

GENERAL NOTES:

1. REFER TO GENERAL NOTES, SYMBOLS, AND ABBREVIATIONS SHEETS FOR ADDITIONAL INFORMATION.
2. COORDINATE EQUIPMENT INSTALLATION INSIDE IDF ROOMS WITH IT PROJECT MANAGER.
3. ALL LOW VOLTAGE CABLING SHALL BE INSTALLED IN ACCORDANCE WITH DIVISION 27 SPECIFICATIONS.

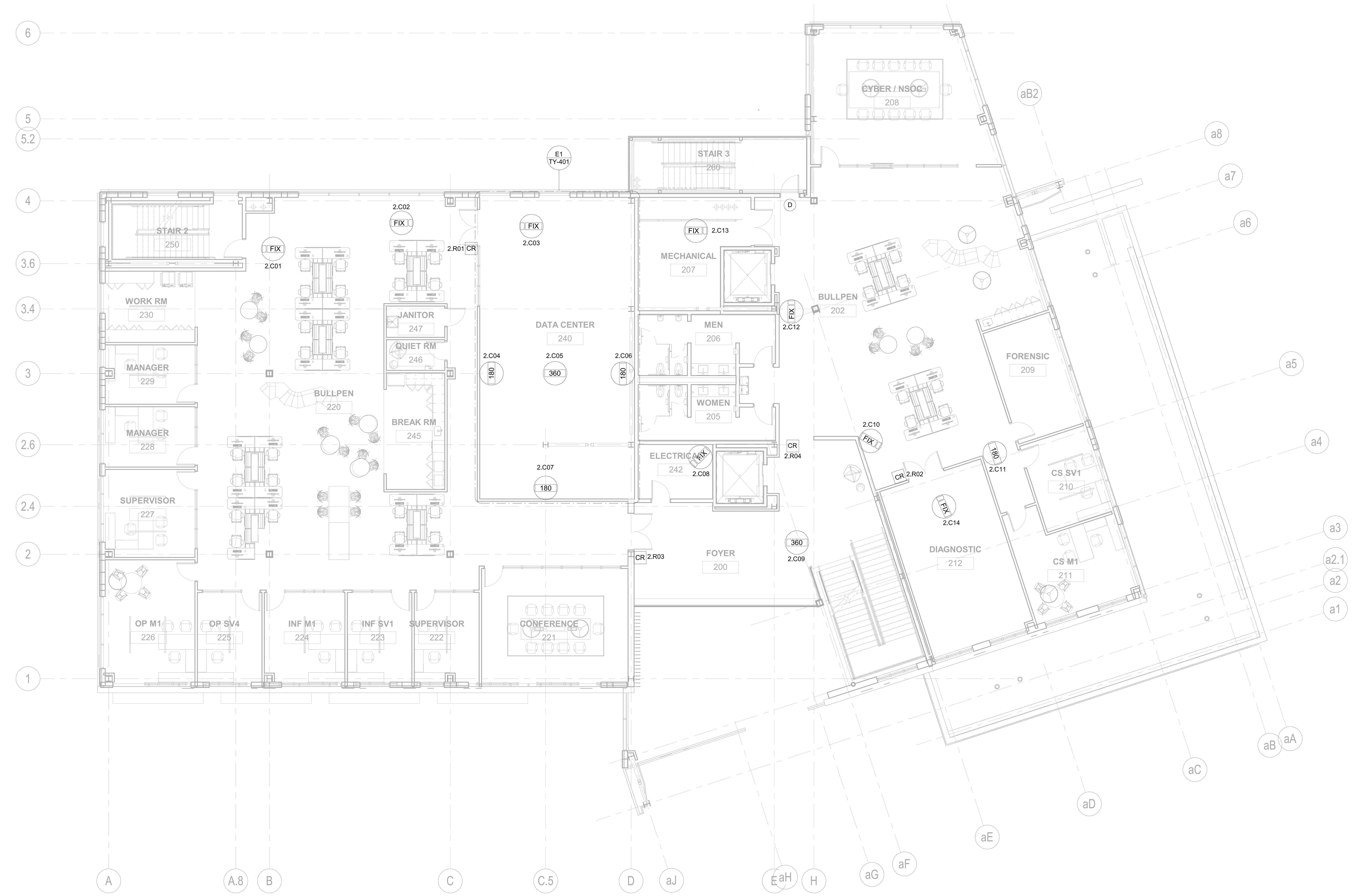

1 SECURITY - FLOOR PLAN - LEVEL 2
1/8" = 1'-0"

FSGROUP® ARCHITECTS
16575 Village Drive
Houston Texas 77040
713 344 1752 PH
fsdesignbuild.com

PROJECT NAME

INFORMATION TECHNOLGY BUILDING
EUGENE HEIMANN CIRCLE
FORT BEND COUNTY . RICHMOND . TEXAS

CONSULTANTS

PGA ENGINEERS, INC
3838 N Sam Houston Pkwy E,
Suite 550
Houston, TX 77032
346.570.2418
pgaengineers.com
TBPE FIRM #12493

PROFESSIONAL SEAL

STATE OF TEXAS
JOHN GRUENWALD
100039
LICENSED
PROFESSIONAL ENGINEER
05/15/2024

ISSUED FOR

ISSUED FOR PROPOSALS AND PERMIT

REVISIONS

No.	DESCRIPTION	DATE

KEY PLAN

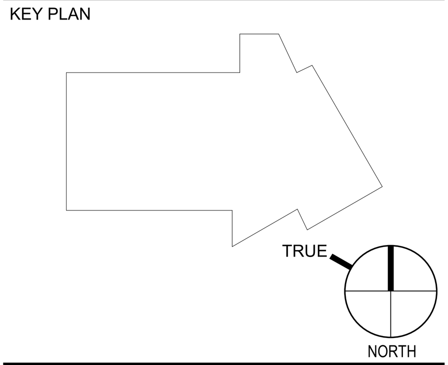

SHEET TITLE

SECURITY - FLOOR PLAN - LEVEL 2

SCALE 1/8" = 1'-0"

DATE 05/15/2024

PROJECT NUMBER 2319

SHEET NUMBER

TY-102

GENERAL NOTES:

1. REFER TO GENERAL NOTES, SYMBOLS, AND ABBREVIATIONS SHEETS FOR ADDITIONAL INFORMATION.
2. COORDINATE EQUIPMENT INSTALLATION INSIDE IDF ROOMS WITH IT PROJECT MANAGER.
3. ALL LOW VOLTAGE CABLING SHALL BE INSTALLED IN ACCORDANCE WITH DIVISION 27 SPECIFICATIONS.

1 SECURITY - FLOOR PLAN - LEVEL 3
1/8" = 1'-0"

FSGROUP ARCHITECTS
16575 Village Drive
Houston Texas 77040
713 344 1752 PH
fsdesignbuild.com

PROJECT NAME

INFORMATION TECHNOLGY BUILDING
EUGENE HEIMANN CIRCLE
FORT BEND COUNTY . RICHMOND . TEXAS

CONSULTANTS

PGA ENGINEERS, INC
3838 N Sam Houston Pkwy E,
Suite 550
Houston, TX 77032
346.570.2418
pgaengineers.com
TBPE FIRM #12493

PROFESSIONAL SEAL

STATE OF TEXAS
JOHN GRUENWALD
100039
LICENSED PROFESSIONAL ENGINEER
05/15/2024

ISSUED FOR

ISSUED FOR PROPOSALS AND PERMIT

REVISIONS

No.	DESCRIPTION	DATE

KEY PLAN

TRUE NORTH

SHEET TITLE

SECURITY - FLOOR PLAN - LEVEL 3

SCALE 1/8" = 1'-0"

DATE 05/15/2024

PROJECT NUMBER 2319

SHEET NUMBER

TY-103

E D C B A

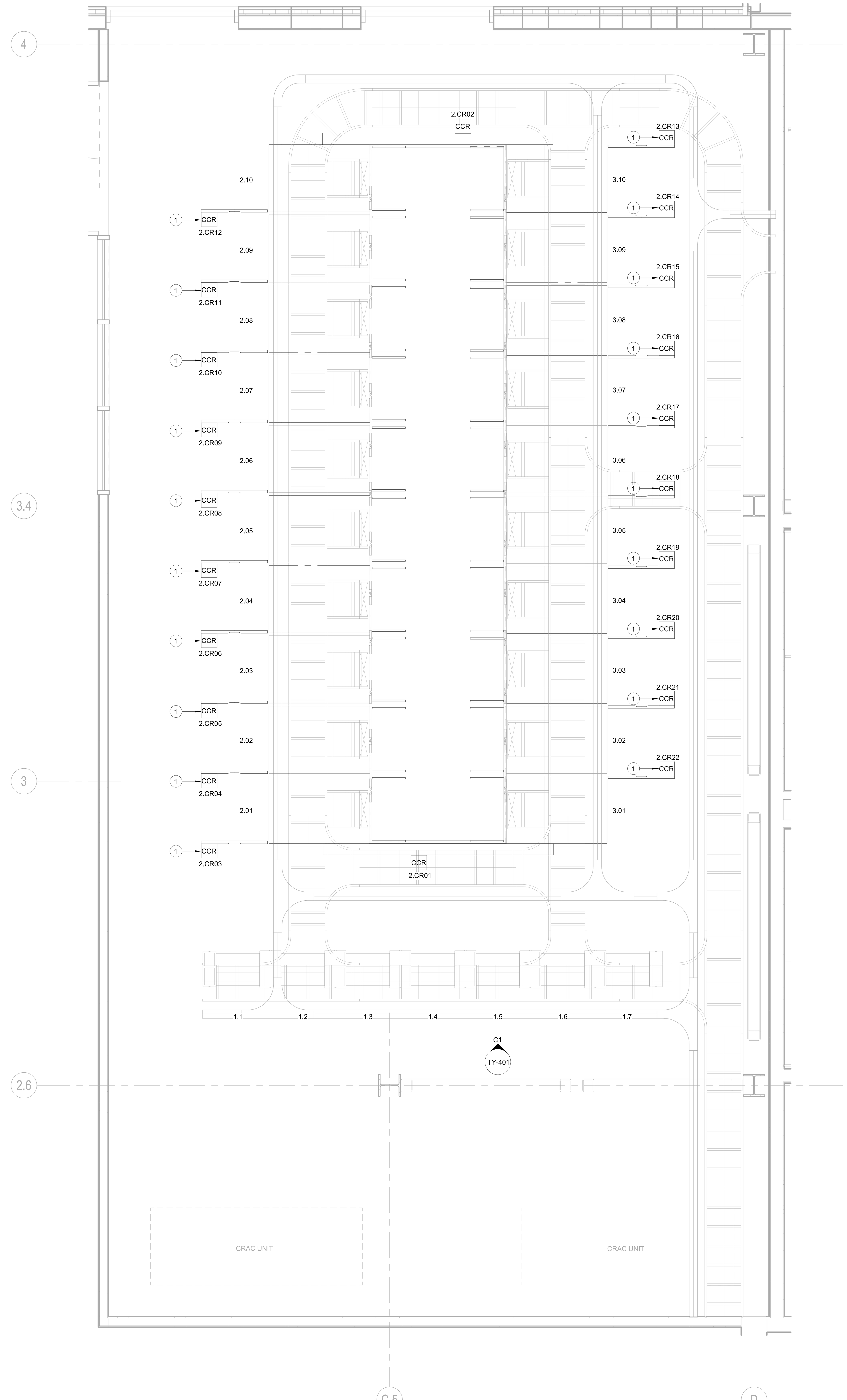

E1 SECURITY - ENLARGED PLAN - DATA CENTER 240
1/2" = 1'-0"

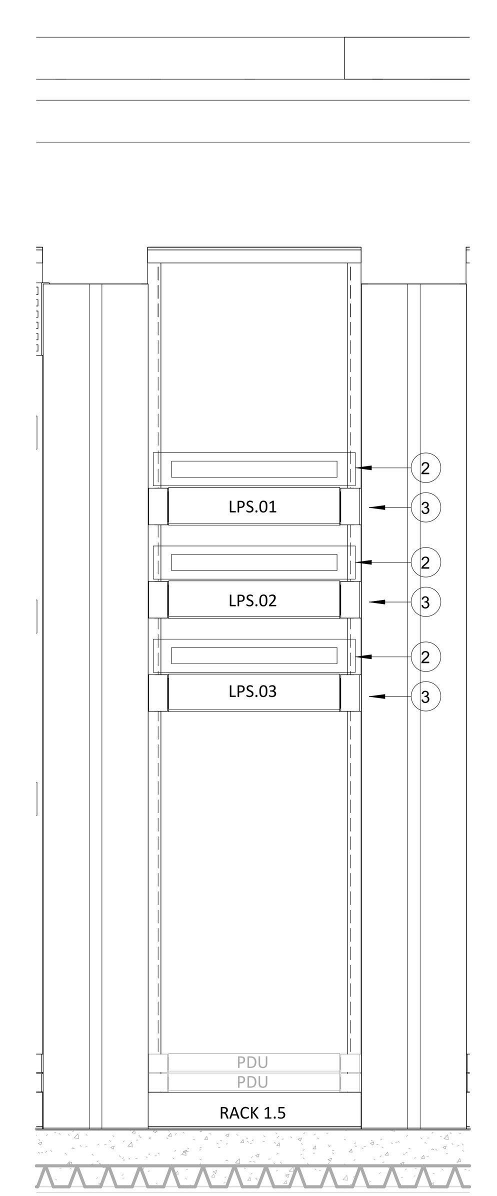

C1 SECURITY RACK - DATA CENTER 240 ELEVATION
1" = 1'-0"

GENERAL NOTES:

1. REFER TO GENERAL NOTES, SYMBOLS, AND ABBREVIATIONS SHEETS FOR ADDITIONAL INFORMATION.
2. COORDINATE EQUIPMENT INSTALLATION INSIDE IDF ROOMS WITH IT PROJECT MANAGER.
3. ALL LOW VOLTAGE CABLING SHALL BE INSTALLED IN ACCORDANCE WITH DIVISION 27 SPECIFICATIONS.

KEYED NOTES:

1. CABINET CARD READER. REFER TO SPECIFICATION FOR PART INFORMATION.
2. HORIZONTAL CABLE MANAGEMENT (HCM).
3. LOCKING POWER SUPPLY. REFER TO SPECIFICATIONS FOR ADDITIONAL INFORMATION.

FSGROUP® ARCHITECTS
16575 Village Drive
Houston Texas 77040
713 344 1752 PH
fsdesignbuild.com

PROJECT NAME

THE STATE OF TEXAS FORT BEND COUNTY

INFORMATION TECHNOLGY BUILDING
EUGENE HEIMANN CIRCLE
FORT BEND COUNTY . RICHMOND . TEXAS

CONSULTANTS

PGA ENGINEERS, INC
3838 N Sam Houston Pkwy E,
Suite 550
Houston, TX 77032
346.570.2418
pgaengineers.com
TBPE FIRM #12493

PROFESSIONAL SEAL

STATE OF TEXAS
JOHN GRUENWALD
100039
LICENSED PROFESSIONAL ENGINEER
05/15/2024

ISSUED FOR

ISSUED FOR PROPOSALS AND PERMIT

REVISIONS

No.	DESCRIPTION	DATE

KEY PLAN

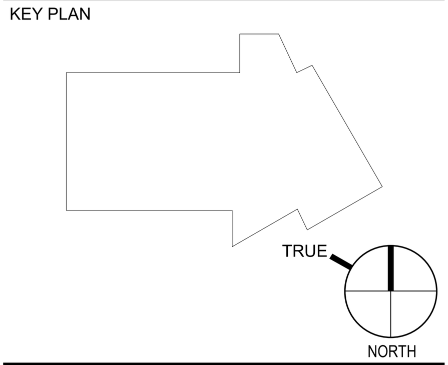

SHEET TITLE

SECURITY - ENLARGED PLAN - DATA CENTER 240

SCALE: As indicated

DATE: 05/15/2024

PROJECT NUMBER: 2319

SHEET NUMBER

TY-401

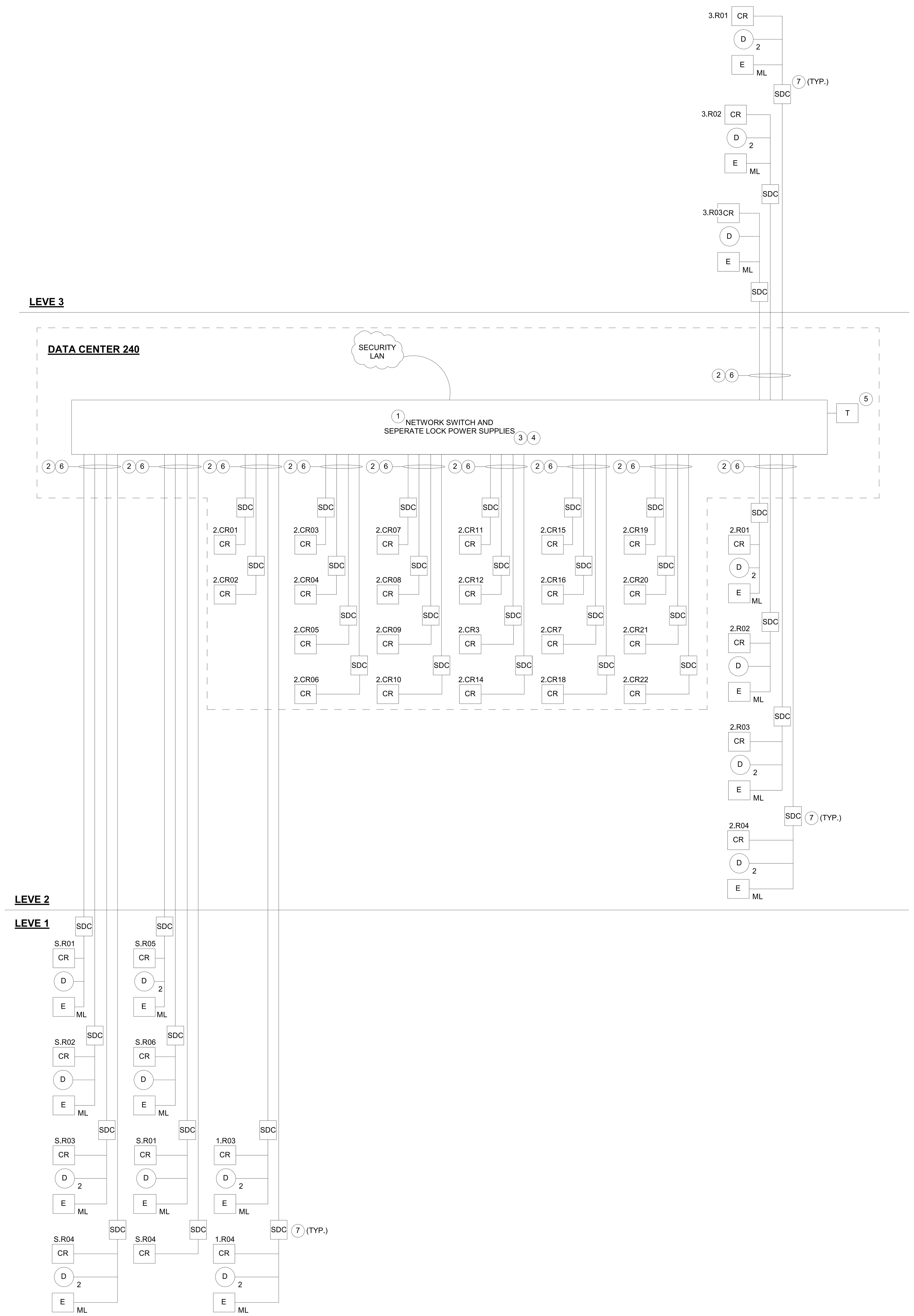

E1 ACCESS CONTROL SYSTEM (ACS) DIAGRAM
NTS

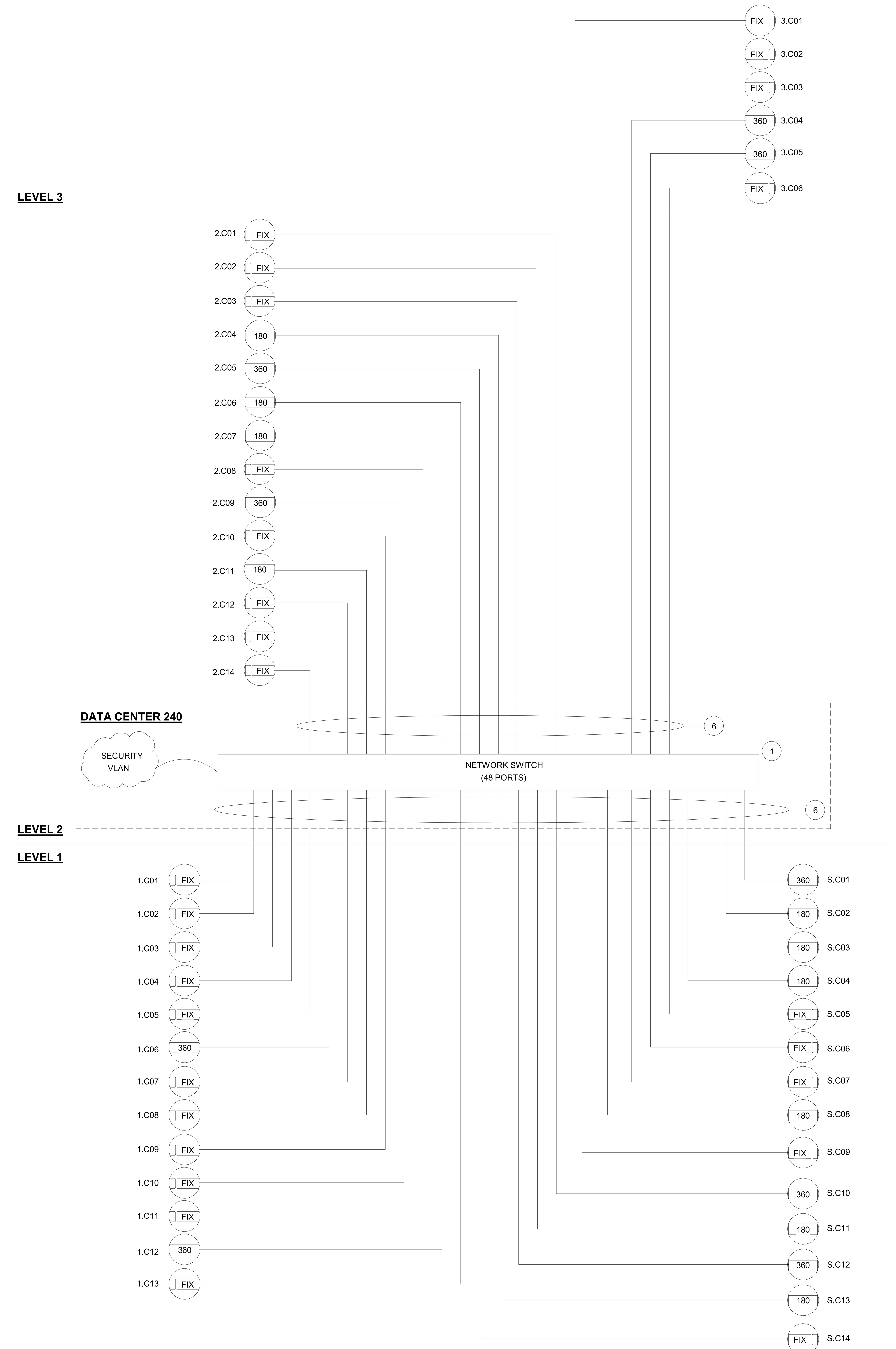

C1 CAMERA CONNECTIVITY DIAGRAM
NTS

GENERAL NOTES:

1. REFER TO GENERAL NOTES, SYMBOLS, AND ABBREVIATIONS SHEETS FOR ADDITIONAL INFORMATION.
2. COORDINATE EQUIPMENT INSTALLATION INSIDE IDF ROOMS WITH IT PROJECT MANAGER.
3. ALL LOW VOLTAGE CABLING SHALL BE INSTALLED IN ACCORDANCE WITH DIVISION 27 SPECIFICATIONS.

KEYED NOTES:

1. 48 PORTS NETWORK SWITCH (DIV 27).
2. LOCK POWER CABLE, 4C, #18 AWG, 16/30 STR.
3. 16-CHANNEL LOCK POWER SUPPLY.
4. RACK MOUNT ADAPTER, 3RU, INFINIAS-S-RACK-006
5. TAMPER SWITCH
6. CAT 6 CABLE.
7. SINGLE DOOR CONTROLLER, INFINIAS EIDC.

FSGROUP ARCHITECTS
16575 Village Drive
Houston Texas 77040
713 344 1752 PH
fsdesignbuild.com

PROJECT NAME

INFORMATION TECHNOLGY BUILDING
EUGENE HEIMANN CIRCLE
FORT BEND COUNTY . RICHMOND . TEXAS

CONSULTANTS

PGA ENGINEERS, INC
3838 N Sam Houston Pkwy E,
Suite 550
Houston, TX 77032
346.570.2418
pgaengineers.com
TBPE FIRM #12493

PROFESSIONAL SEAL

STATE OF TEXAS
JOHN GRUENWALD
100039
LICENSED
PROFESSIONAL ENGINEER
05/15/2024

ISSUED FOR

ISSUED FOR PROPOSALS AND PERMIT

REVISIONS

No.	DESCRIPTION	DATE

KEY PLAN

TRUE NORTH

SHEET TITLE

SECURITY - SECURITY CONTROL DIAGRAM

SCALE: As indicated

DATE: 05/15/2024

PROJECT NUMBER: 2319

SHEET NUMBER

TY-402

CARD READER SCHEDULE

READER NO.	SHEET NO.	SECURITY - DOOR NO.	LEVEL	READER TYPE	MOUNT	TERMINATING IDF	REFERENCE DOOR DETAIL SHEET NO.
1.R01	TY.101	140	LEVEL 1	PROX	WALL	DATA CENTER RM 240	1TY-601/E2
1.R02	TY.101	ELEVATOR	LEVEL1	PROX	WALL	DATA CENTER RM 240	TBD
1.R03	TY.101	112	LEVEL 1	PROX	WALL	DATA CENTER RM 240	1TY-601/E2
1.R04	TY.101	120	LEVEL 1	PROX	WALL	DATA CENTER RM 240	1TY-601/E2
2.CR01	TY.401	SOUTH CONTAINMENT DOOR	LEVEL 2	PROX	CABINET	DATA CENTER RM 240	TBD
2.CR02	TY.401	NORTH CONTAINMENT DOOR	LEVEL 2	PROX	CABINET	DATA CENTER RM 240	TBD
2.CR03	TY.401	CABINET 2.01	LEVEL 2	PROX	CABINET	DATA CENTER RM 240	TBD
2.CR04	TY.401	CABINET 2.02	LEVEL 2	PROX	CABINET	DATA CENTER RM 240	TBD
2.CR05	TY.401	CABINET 2.03	LEVEL 2	PROX	CABINET	DATA CENTER RM 240	TBD
2.CR06	TY.401	CABINET 2.04	LEVEL 2	PROX	CABINET	DATA CENTER RM 240	TBD
2.CR07	TY.401	CABINET 2.05	LEVEL 2	PROX	CABINET	DATA CENTER RM 240	TBD
2.CR08	TY.401	CABINET 2.06	LEVEL 2	PROX	CABINET	DATA CENTER RM 240	TBD
2.CR09	TY.401	CABINET 2.07	LEVEL 2	PROX	CABINET	DATA CENTER RM 240	TBD
2.CR10	TY.401	CABINET 2.08	LEVEL 2	PROX	CABINET	DATA CENTER RM 240	TBD
2.CR11	TY.401	CABINET 2.09	LEVEL 2	PROX	CABINET	DATA CENTER RM 240	TBD
2.CR12	TY.401	CABINET 2.10	LEVEL 2	PROX	CABINET	DATA CENTER RM 240	TBD
2.CR13	TY.401	CABINET 3.10	LEVEL 2	PROX	CABINET	DATA CENTER RM 240	TBD
2.CR14	TY.401	CABINET 3.09	LEVEL 2	PROX	CABINET	DATA CENTER RM 240	TBD
2.CR15	TY.401	CABINET 3.08	LEVEL 2	PROX	CABINET	DATA CENTER RM 240	TBD
2.CR16	TY.401	CABINET 3.07	LEVEL 2	PROX	CABINET	DATA CENTER RM 240	TBD
2.CR17	TY.401	CABINET 3.06	LEVEL 2	PROX	CABINET	DATA CENTER RM 240	TBD
2.CR18	TY.401	CABINET 3.05	LEVEL 2	PROX	CABINET	DATA CENTER RM 240	TBD
2.CR19	TY.401	CABINET 3.04	LEVEL 2	PROX	CABINET	DATA CENTER RM 240	TBD
2.CR20	TY.401	CABINET 3.03	LEVEL 2	PROX	CABINET	DATA CENTER RM 240	TBD
2.CR21	TY.401	CABINET 3.02	LEVEL 2	PROX	CABINET	DATA CENTER RM 240	TBD
2.CR22	TY.401	CABINET 3.01	LEVEL 2	PROX	CABINET	DATA CENTER RM 240	TBD
2.R01	TY.102	240	LEVEL 2	PROX	WALL	DATA CENTER RM 240	1TY-601/E2
2.R02	TY.102	212	LEVEL 2	PROX	WALL	DATA CENTER RM 240	1TY-601/E2
2.R03	TY.102	220	LEVEL 2	PROX	WALL	DATA CENTER RM 240	1TY-601/E2
2.R04	TY.102	202	LEVEL 2	PROX	WALL	DATA CENTER RM 240	1TY-601/E2
3.R01	TY.103	320	LEVEL 3	PROX	WALL	DATA CENTER RM 240	1TY-601/E2
3.R02	TY.103	302	LEVEL 3	PROX	WALL	DATA CENTER RM 240	1TY-601/E2
3.R03	TY.103	302	LEVEL 3	PROX	WALL	DATA CENTER RM 240	1TY-601/C1
S.R01	TY.101	150	SITE	PROX	WALL	DATA CENTER RM 240	1TY-601/C1
S.R02	TY.101	120	SITE	PROX	WALL	DATA CENTER RM 240	1TY-601/C1
S.R03	TY.101	100	SITE	PROX	WALL	DATA CENTER RM 240	1TY-601/E2
S.R04	TY.101	112	SITE	PROX	WALL	DATA CENTER RM 240	1TY-601/E2
S.R05	TY.101	101	SITE	PROX	WALL	DATA CENTER RM 240	1TY-601/E1
S.R06	TY.101	136	SITE	PROX	WALL	DATA CENTER RM 240	1TY-601/C1

CAMERA SCHEDULE

CAMERA NO.	LEVEL	SHEET NO.	CAMERA VIEW	CAMERA TYPE	TERMINATING IDF	CAMERA MOUNTING TYPE
1.C01	LEVEL 1	TY.101	BULLPEN 120 EXIT	FIXED	DATA CENTER RM 240	CEILING
1.C02	LEVEL 1	TY.101	FIRE RISER 136	FIXED	DATA CENTER RM 240	CEILING
1.C03	LEVEL 1	TY.101	TECH BUILD RM 140 ENTRANCE	FIXED	DATA CENTER RM 240	WALL
1.C04	LEVEL 1	TY.101	TECH BUILD RM 140	FIXED	DATA CENTER RM 240	CEILING
1.C05	LEVEL 1	TY.101	ELECTRICAL 141	FIXED	DATA CENTER RM 240	WALL
1.C06	LEVEL 1	TY.101	LOBBY 100	360 IP	DATA CENTER RM 240	CEILING
1.C07	LEVEL 1	TY.101	ENTRANCE FROM TRAINING ROOM 102	FIXED	DATA CENTER RM 240	WALL
1.C08	LEVEL 1	TY.101	ENTRANCE FROM TRAINING ROOM 102	FIXED	DATA CENTER RM 240	CEILING
1.C09	LEVEL 1	TY.101	LOADING 112	FIXED	DATA CENTER RM 240	WALL
1.C10	LEVEL 1	TY.101	VESTIBULE 101	FIXED	DATA CENTER RM 240	CEILING
1.C11	LEVEL 1	TY.101	MECHANICAL 107	FIXED	DATA CENTER RM 240	CEILING
1.C12	LEVEL 1	TY.101	NORTH CORRIDOR OF LOBBY 100	360 IP	DATA CENTER RM 240	CEILING
1.C13	LEVEL 1	TY.101	ELECTRICAL143	FIXED	DATA CENTER RM 240	CEILING
2.C01	LEVEL 2	TY.102	STAIR 250	FIXED	DATA CENTER RM 240	CEILING
2.C02	LEVEL 2	TY.102	OUTSIDE DATA CENTER 240	FIXED	DATA CENTER RM 240	CEILING
2.C03	LEVEL 2	TY.102	INSIDE DATA CENTER 240	FIXED	DATA CENTER RM 240	CEILING
2.C04	LEVEL 2	TY.102	INSIDE DATA CENTER 240	180 IP	DATA CENTER RM 240	WALL
2.C05	LEVEL 2	TY.102	INSIDE DATA CENTER 240	360 IP	DATA CENTER RM 240	CEILING
2.C06	LEVEL 2	TY.102	INSIDE DATA CENTER 240	180 IP	DATA CENTER RM 240	WALL
2.C07	LEVEL 2	TY.102	INSIDE DATA CENTER 240	180 IP	DATA CENTER RM 240	WALL
2.C08	LEVEL 2	TY.102	INSIDE ELECTRICAL 242	FIXED	DATA CENTER RM 240	WALL
2.C09	LEVEL 2	TY.102	FOYER 200	360 IP	DATA CENTER RM 240	CEILING
2.C10	LEVEL 2	TY.102	OUTSIDE DIAGNOSTIC 212	FIXED	DATA CENTER RM 240	WALL
2.C11	LEVEL 2	TY.102	SOUTHEAST CORNER CORRIDOR	180 IP	DATA CENTER RM 240	WALL
2.C12	LEVEL 2	TY.102	OUTSIDE MECHANICAL 207	FIXED	DATA CENTER RM 240	WALL
2.C13	LEVEL 2	TY.102	INSIDE MECHANICAL 207	FIXED	DATA CENTER RM 240	CEILING
2.C14	LEVEL 2	TY.102	INSIDE DIAGNOSTIC 212	FIXED	DATA CENTER RM 240	CEILING
3.C01	LEVEL 3	TY.103	STAIR 350	FIXED	DATA CENTER RM 240	WALL
3.C02	LEVEL 3	TY.103	OUTSIDE ELECTRICAL 334	FIXED	DATA CENTER RM 240	WALL
3.C03	LEVEL 3	TY.103	INSIDE MECHANICAL 307	FIXED	DATA CENTER RM 240	WALL
3.C04	LEVEL 3	TY.103	CORRIDOR 302	360 IP	DATA CENTER RM 240	CEILING
3.C05	LEVEL 3	TY.103	FOYER 300	360 IP	DATA CENTER RM 240	CEILING
3.C06	LEVEL 3	TY.103	INSIDE ELECTRICAL 334	FIXED	DATA CENTER RM 240	WALL
S.C01	SITE	TY.100	BUILDING NORTHWEST CORNER	360 IP	DATA CENTER RM 240	WALL
S.C02	SITE	TY.100	BUILDING NORTH SIDE	180 IP	DATA CENTER RM 240	WALL
S.C03	SITE	TY.100	BUILDING NORTH SIDE	180 IP	DATA CENTER RM 240	WALL
S.C04	SITE	TY.100	NORTH STAIRS	180 IP	DATA CENTER RM 240	WALL
S.C05	SITE	TY.101	LOADING 112 ENTRANCE	FIXED	DATA CENTER RM 240	WALL
S.C06	SITE	TY.101	ELECTRICAL143	FIXED	DATA CENTER RM 240	WALL
S.C07	SITE	TY.101	TRAINING ROOM EXIT 102	FIXED	DATA CENTER RM 240	WALL
S.C08	SITE	TY.100	BUILDING EAST SIDE	180 IP	DATA CENTER RM 240	WALL
S.C09	SITE	TY.101	TRAINING ROOM EXIT 102	FIXED	DATA CENTER RM 240	WALL
S.C10	SITE	TY.100	ENTRANCE TO LOBBY 100	360 IP	DATA CENTER RM 240	WALL
S.C11	SITE	TY.100	BUILDING SOUTH SIDE	180 IP	DATA CENTER RM 240	WALL
S.C12	SITE	TY.100	BUILDING SOUTHWEST CORNER	360 IP	DATA CENTER RM 240	WALL
S.C13	SITE	TY.100	BUILDING EAST SIDE	180 IP	DATA CENTER RM 240	WALL
S.C14	SITE	TY.101	ENTRANCE TO FIRE RISER 136	FIXED	DATA CENTER RM 240	WALL

FSGROUP® ARCHITECTS
16575 Village Drive
Houston Texas 77040
713 344 1752 PH
fsdesignbuild.com

PROJECT NAME

THE STATE OF TEXAS · FORT BEND COUNTY

INFORMATION TECHNOLGY BUILDING
EUGENE HEIMANN CIRCLE
FORT BEND COUNTY . RICHMOND . TEXAS

CONSULTANTS

PGA ENGINEERS, INC
3838 N Sam Houston Pkwy E,
Suite 550
Houston, TX 77032
346.570.2418
pgaengineers.com
TBPE FIRM #12493

PROFESSIONAL SEAL

STATE OF TEXAS
JOHN GRUENWALD
100039
LICENSED
PROFESSIONAL ENGINEER
John Gruenwald
05/15/2024

ISSUED FOR

ISSUED FOR PROPOSALS AND PERMIT

REVISIONS

No.	DESCRIPTION	DATE

KEY PLAN

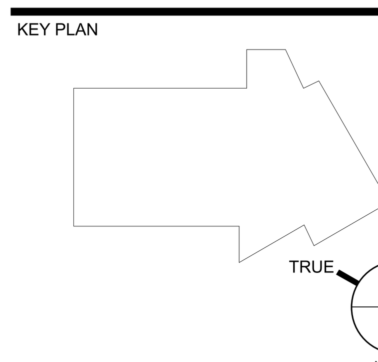

SHEET TITLE

SECURITY - EQUIPMENT SCHEDULES

SCALE

DATE 05/15/2024

PROJECT NUMBER 2319

SHEET NUMBER

TY-501

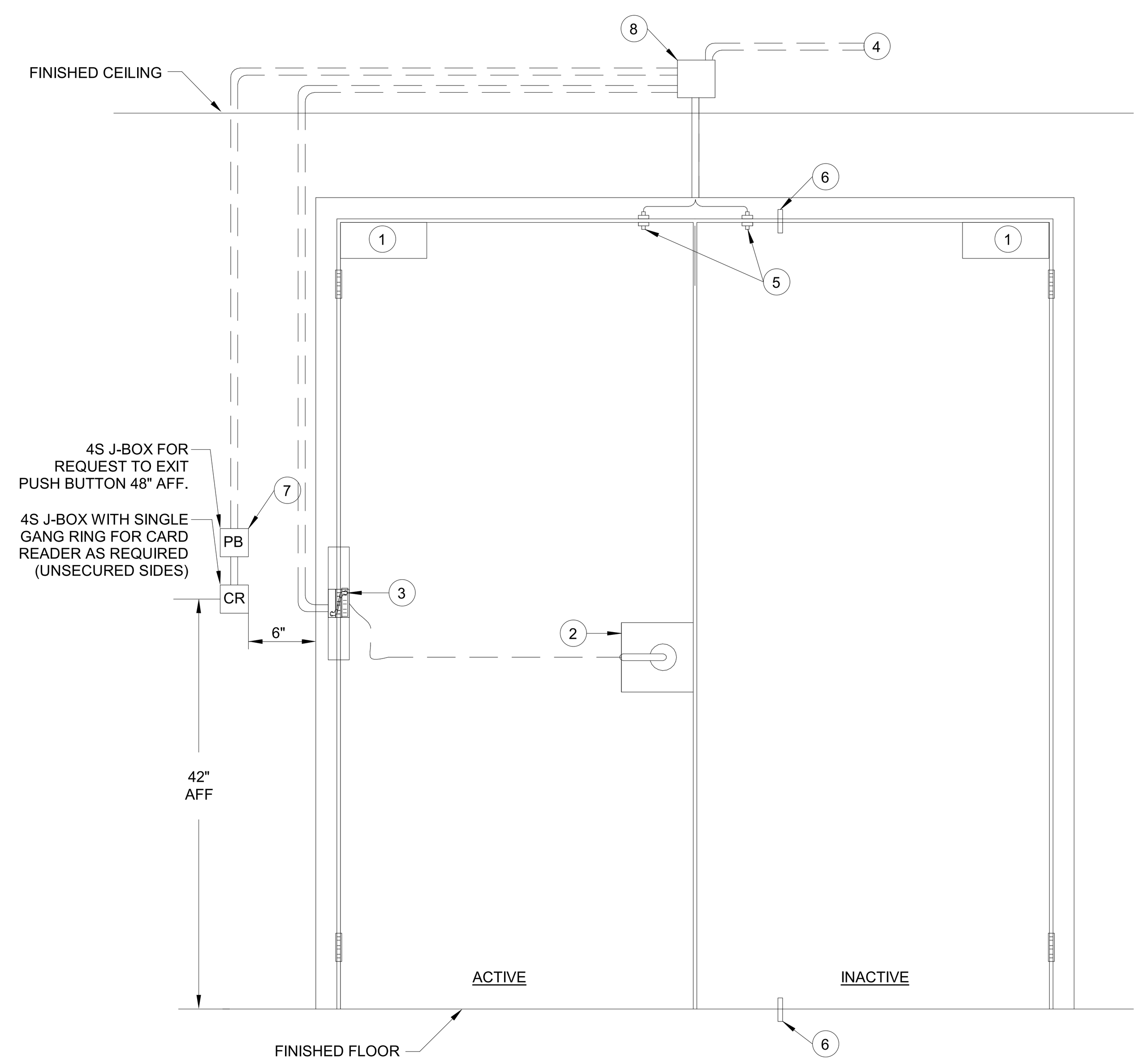

E2 SECURITY DOOR - ELECTRIC MORTISE LOCK (DOUBLE DOOR)
NTS

GENERAL NOTES:

1. VIEW SHOWN IS FROM SECURED SIDE OF PORTAL. CONDUIT, BOXES AND EQUIPMENT SHALL BE MOUNTED ON SECURED SIDE OF PORTAL, UNLESS OTHERWISE NOTED.
2. CONDUITS MAY BE COMBINED. IF COMBINED, CONTRACTOR SHALL ENSURE CONDUIT IS SIZED TO ACCEPT REQUIRED CONDUCTORS PER NEC.
3. COORDINATE MOUNTING LOCATIONS, ROUGH-IN AND FINISHES WITH THE OWNER.
4. CONDUIT SHALL BE CONCEALED UNLESS OTHERWISE NOTED.
5. DOOR HARDWARE SHOWN FOR REFERENCE ONLY. TYPE OF HARDWARE MAY VARY. ALL DOOR HARDWARE SHALL HAVE KEY CYLINDER UNLESS NOTED OTHERWISE. DOOR HARDWARE BY DIV.8.
6. PROVIDE CONDUIT ONLY WHERE WIRING CANNOT ROUTE IN DOOR FRAME.
7. ALL SECURITY DOORS SHALL HAVE DOOR CLOSER.

KEY NOTES:

1. DOOR COORDINATOR (PROVIDED BY DIV.8).
2. ELECTRIFIED MORTISE LOCK WITH BUILT-IN REX (BY DIV.8).
3. ELECTRIC POWER TRANSFER (BY DIV.8).
4. 1"C. TO NEAREST CABLE TRAY. EXTEND CABLES TO MDF/IDF ROOM FOR CONNECTION TO ACP.
5. DOOR POSITION SWITCH, FLUSH MOUNT.
6. MANUAL FLUSH BOLT (BY DIV. 8.)
7. REQUEST TO EXIT (REX) PUSH BUTTON.
8. CONCEALED 8"x8"x4" JUNCTION BOX ACCESSIBLE FROM SECURE SIDE OF DOOR.

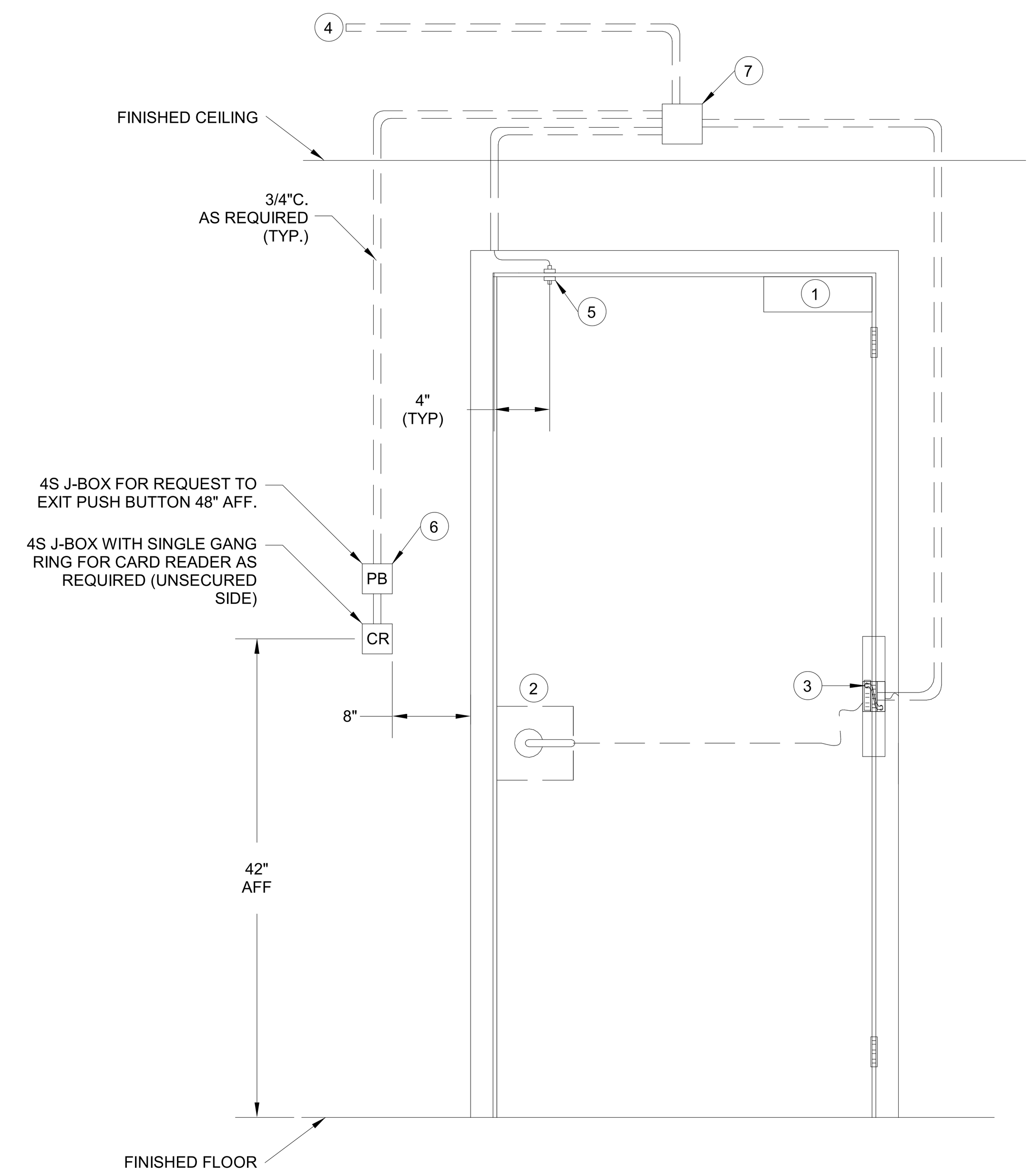

C2 SECURITY DOOR - ELECTRIC MORTISE LOCK (SINGLE DOOR)
NTS

GENERAL NOTES:

1. VIEW SHOWN IS FROM SECURED SIDE OF PORTAL. CONDUIT, BOXES AND EQUIPMENT SHALL BE MOUNTED ON SECURED SIDE OF PORTAL, UNLESS OTHERWISE NOTED.
2. CONDUITS MAY BE COMBINED. IF COMBINED, CONTRACTOR SHALL ENSURE CONDUIT IS SIZED TO ACCEPT REQUIRED CONDUCTORS PER NEC.
3. COORDINATE MOUNTING LOCATIONS, ROUGH-IN AND FINISHES WITH THE OWNER.
4. CONDUIT SHALL BE CONCEALED UNLESS OTHERWISE NOTED.
5. DOOR HARDWARE SHOWN FOR REFERENCE ONLY. TYPE OF HARDWARE MAY VARY. ALL DOOR HARDWARE SHALL HAVE KEY CYLINDER UNLESS NOTED OTHERWISE. DOOR HARDWARE BY DIV.8.
6. PROVIDE CONDUIT ONLY WHERE WIRING CANNOT ROUTE IN DOOR FRAME.
7. ALL SECURITY DOORS SHALL HAVE DOOR CLOSER.

KEY NOTES:

1. DOOR COORDINATOR (PROVIDED BY DIV.8).
2. ELECTRIFIED MORTISE LOCK WITH BUILT-IN REX (BY DIV.8).
3. ELECTRIC POWER TRANSFER (BY DIV.8).
4. 1"C. TO NEAREST CABLE TRAY. EXTEND CABLES TO MDF/IDF ROOM FOR CONNECTION TO ACP.
5. DOOR POSITION SWITCH, FLUSH MOUNT.
6. REQUEST TO EXIT (REX) PUSH BUTTON.
7. CONCEALED 8"x8"x4" JUNCTION BOX ACCESSIBLE FROM SECURE SIDE OF DOOR.

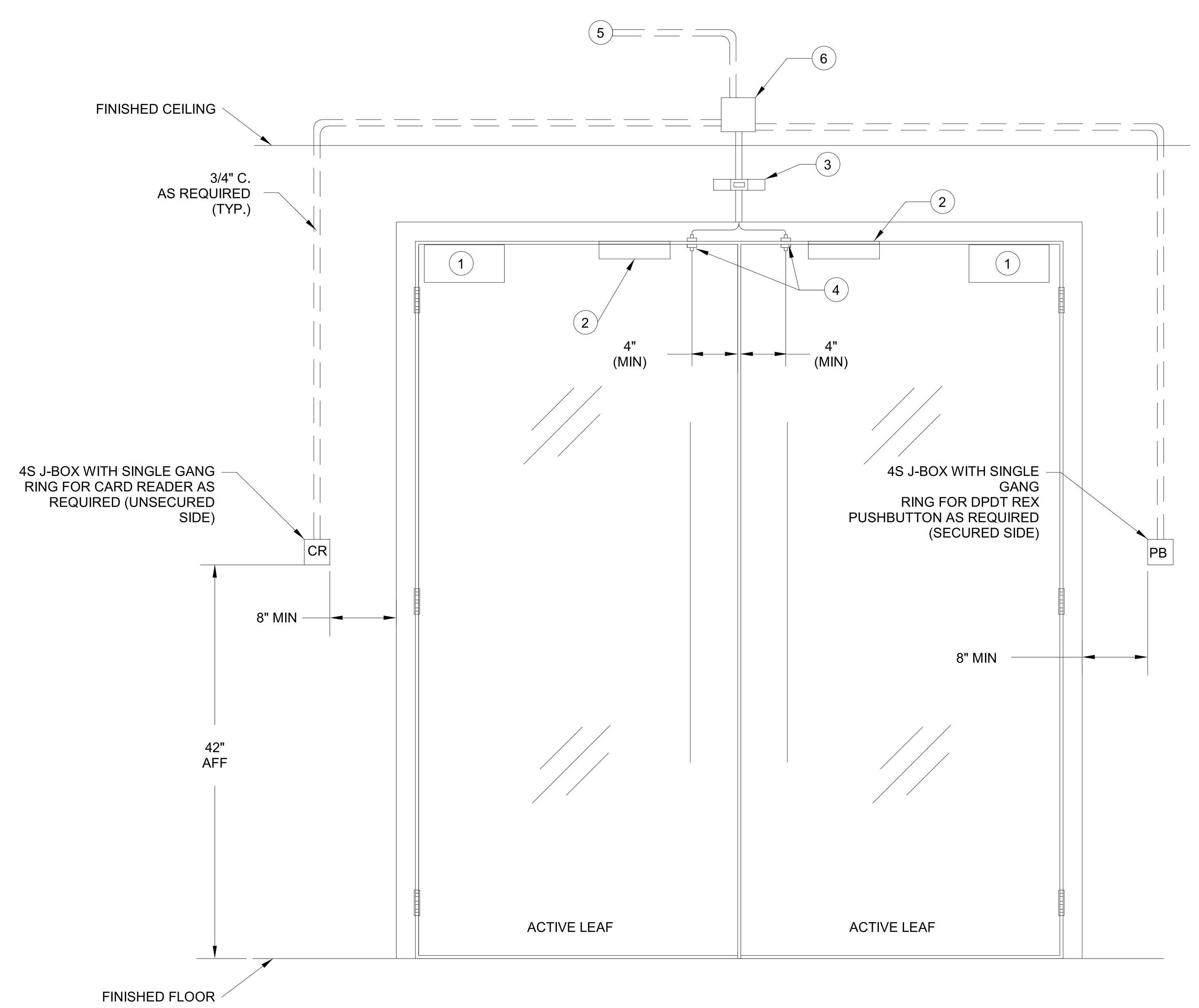

E1 SECURITY DOOR - GLASS DOOR W/ MAGNETIC LOCK (DOUBLE DOOR)
NTS

GENERAL NOTES:

1. VIEW SHOWN IS FROM SECURED SIDE OF PORTAL. CONDUIT, BOXES AND EQUIPMENT SHALL BE MOUNTED ON SECURED SIDE OF PORTAL, UNLESS OTHERWISE NOTED.
2. CONDUITS MAY BE COMBINED. IF COMBINED, CONTRACTOR SHALL ENSURE CONDUIT IS SIZED TO ACCEPT REQUIRED CONDUCTORS.
3. COORDINATE MOUNTING LOCATIONS, ROUGH-IN AND FINISHES WITH THE OWNER.
4. CONDUIT SHALL BE CONCEALED UNLESS OTHERWISE NOTED.
5. DOOR HARDWARE SHOWN FOR REFERENCE ONLY. TYPE OF HARDWARE MAY VARY. ALL DOOR HARDWARE SHALL HAVE KEY CYLINDER UNLESS NOTED OTHERWISE.
6. PROVIDE CONDUIT ONLY WHERE WIRING CANNOT ROUTE IN DOOR FRAME.
7. ALL SECURITY DOORS SHALL HAVE DOOR CLOSER.

KEY NOTES:

1. DOOR CLOSER (PROVIDED BY OTHERS)
2. MAGNETIC LOCK
3. REQUEST-TO-EXIT (REX) MOTION SENSOR - MOUNT ON 4S J-BOX WITH SINGLE GANG RING (HORIZONTAL) 6" ABOVE DOOR FRAME. MOUNT ON FRAME FOR FULL HEIGHT DOORS. COORDINATE COLOR AND FINISH WITH OWNER.
4. SURFACE MOUNT DOOR POSITION SWITCH (DPDT)
5. 1"C. TO NEAREST CABLE TRAY. EXTEND CABLES TO IDF ROOM FOR CONNECTION TO ACP & LPS.
6. CONCEALED 8"x8"x4" JUNCTION BOX ACCESSIBLE FROM SECURE SIDE OF DOOR.

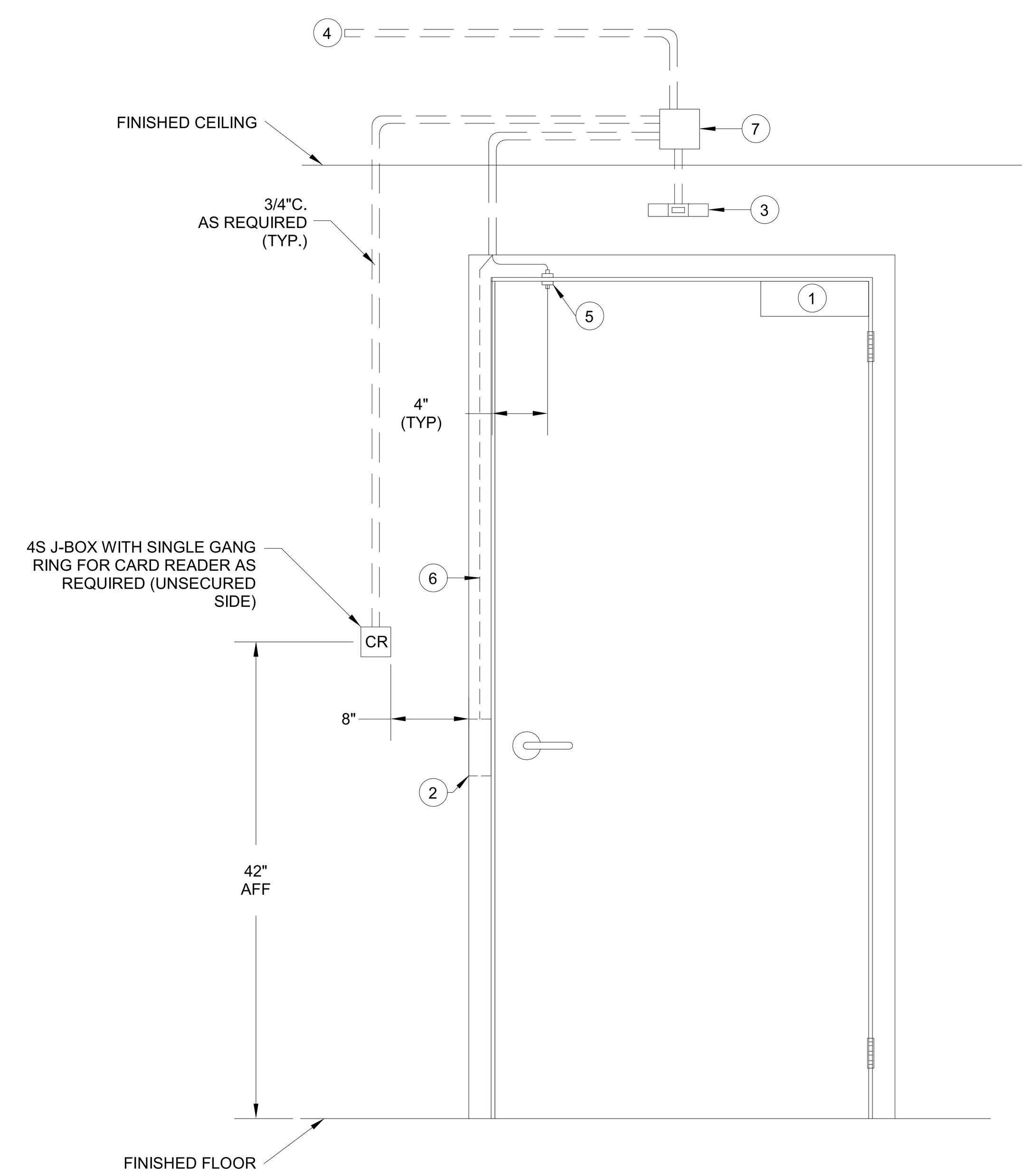

C1 SECURITY DOOR - ELECTRIC STRIKE (SINGLE DOOR)
NTS

GENERAL NOTES:

1. VIEW SHOWN IS FROM SECURED SIDE OF PORTAL. CONDUIT, BOXES AND EQUIPMENT SHALL BE MOUNTED ON SECURED SIDE OF PORTAL, UNLESS OTHERWISE NOTED.
2. CONDUITS MAY BE COMBINED. IF COMBINED, CONTRACTOR SHALL ENSURE CONDUIT IS SIZED TO ACCEPT REQUIRED CONDUCTORS PER NEC.
3. COORDINATE MOUNTING LOCATIONS, ROUGH-IN AND FINISHES WITH THE OWNER.
4. CONDUIT SHALL BE CONCEALED UNLESS OTHERWISE NOTED.
5. DOOR HARDWARE SHOWN FOR REFERENCE ONLY. TYPE OF HARDWARE MAY VARY. ALL DOOR HARDWARE SHALL HAVE KEY CYLINDER UNLESS NOTED OTHERWISE. DOOR HARDWARE BY DIV.8.
6. PROVIDE CONDUIT ONLY WHERE WIRING CANNOT ROUTE IN DOOR FRAME.
7. ALL SECURITY DOORS SHALL HAVE DOOR CLOSER.

KEY NOTES:

1. DOOR COORDINATOR (PROVIDED BY DIV.8).
2. ELECTRIFIED STRIKE LOCK (BY DIV.8).
3. REQUEST-TO-EXIT (REX) MOTION SENSOR - MOUNT ON 4S J-BOX WITH SINGLE GANG RING (HORIZONTAL) 6" ABOVE DOOR FRAME. MOUNT ON FRAME FOR FULL HEIGHT DOORS. COORDINATE COLOR AND FINISH WITH OWNER.
4. 1"C. TO NEAREST CABLE TRAY. EXTEND CABLES TO MDF/IDF ROOM FOR CONNECTION TO ACP.
5. DOOR POSITION SWITCH, SURFACE MOUNT.
6. PROVIDE POWER VIA CONDUIT IN WALL TO NEW STRIKE AS ALTERNATE OPTION.
7. CONCEALED 8"x8"x4" JUNCTION BOX ACCESSIBLE FROM SECURE SIDE OF DOOR.

FSGROUP ARCHITECTS
16575 Village Drive
Houston Texas 77040
713 344 1752 PH
fsdesignbuild.com

PROJECT NAME

INFORMATION TECHNOLGY BUILDING
EUGENE HEIMANN CIRCLE
FORT BEND COUNTY . RICHMOND . TEXAS

CONSULTANTS

PGA ENGINEERS, INC
3838 N Sam Houston Pkwy E,
Suite 550
Houston, TX 77032
346.570.2418
pgaengineers.com
TBPE FIRM #12493

PROFESSIONAL SEAL

STATE OF TEXAS
JOHN GRUENWALD
100039
LICENSED PROFESSIONAL ENGINEER
05/15/2024

ISSUED FOR

ISSUED FOR PROPOSALS AND PERMIT

REVISIONS

No.	DESCRIPTION	DATE

KEY PLAN

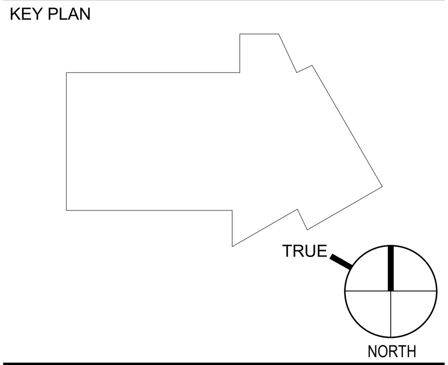

SHEET TITLE

SECURITY - DETAILS

SCALE
NTS

DATE
05/15/2024

PROJECT NUMBER
2319

SHEET NUMBER

TY-601

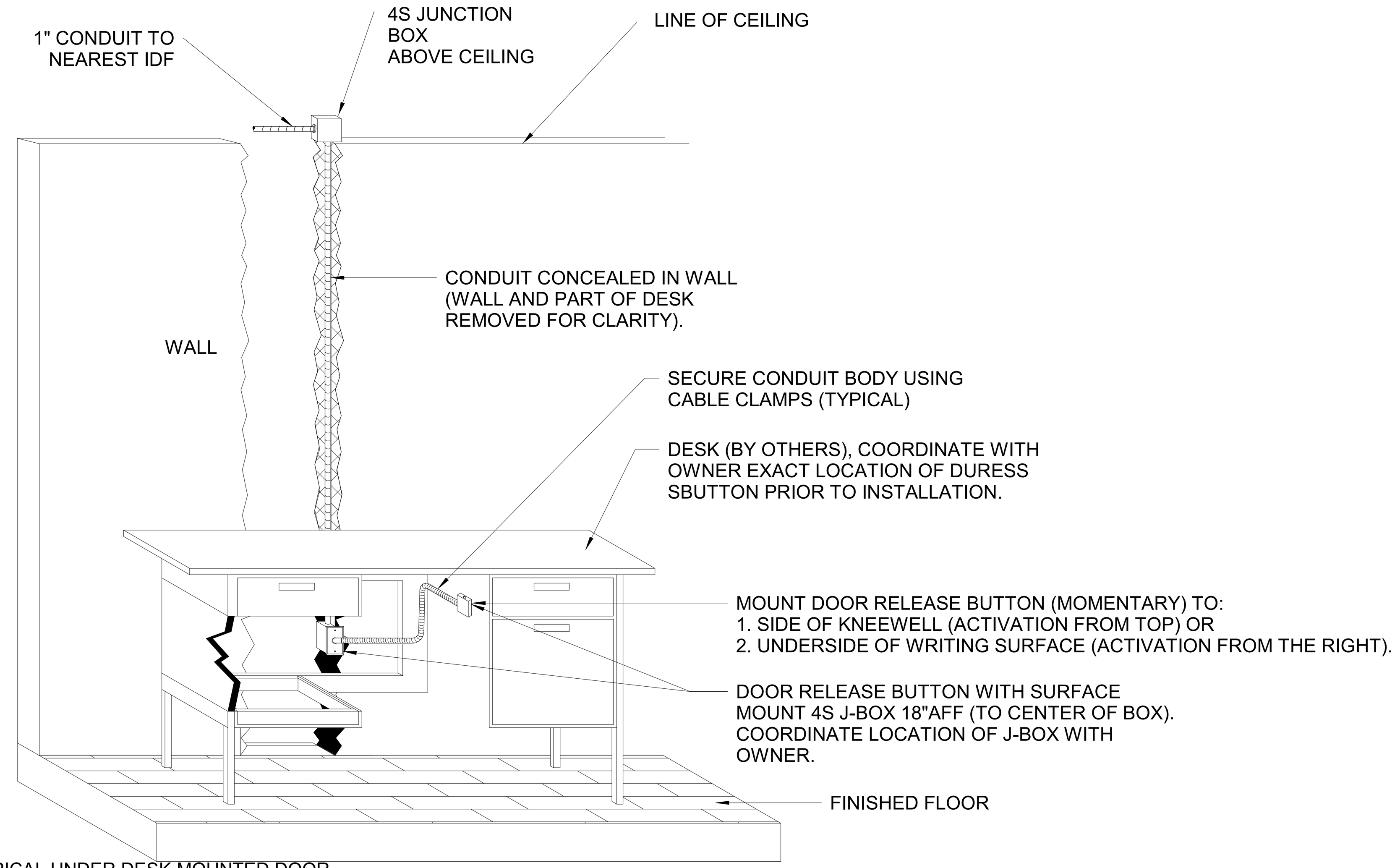

E3 TYPICAL UNDER DESK MOUNTED DOOR RELEASE BUTTON DETAIL
NTS

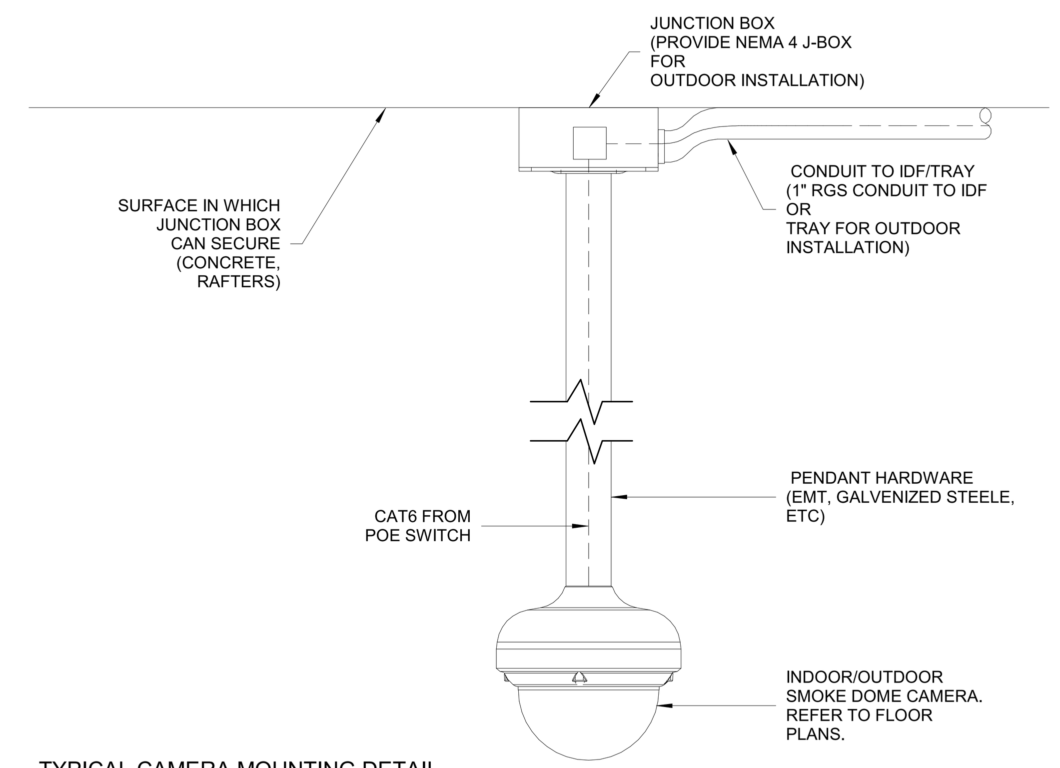

C3 TYPICAL CAMERA MOUNTING DETAIL - CEILING PENDANT
NTS

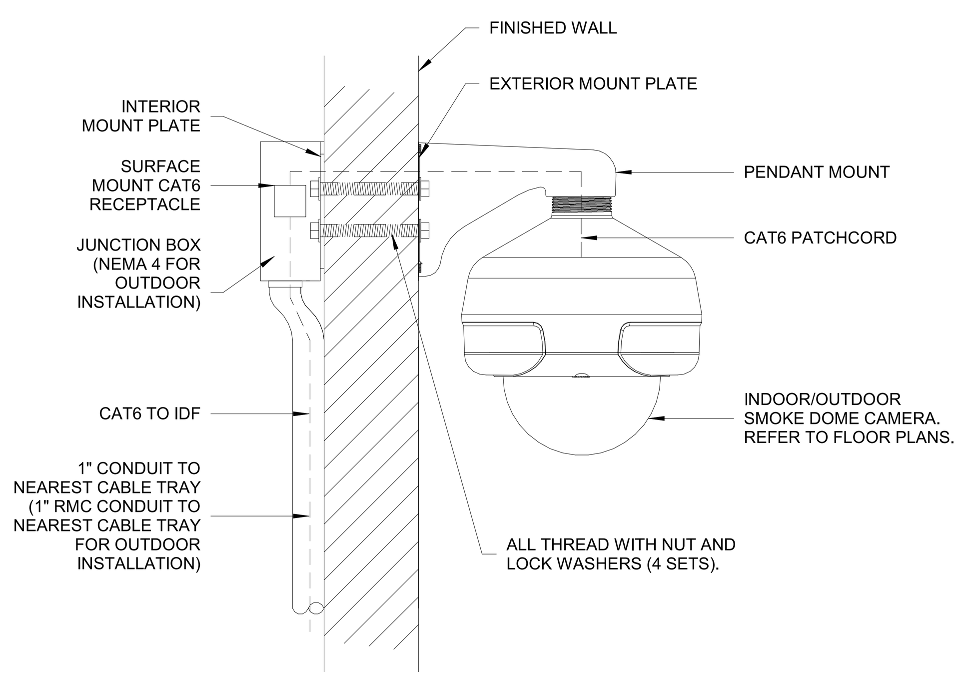

A. FLUSH MOUNT

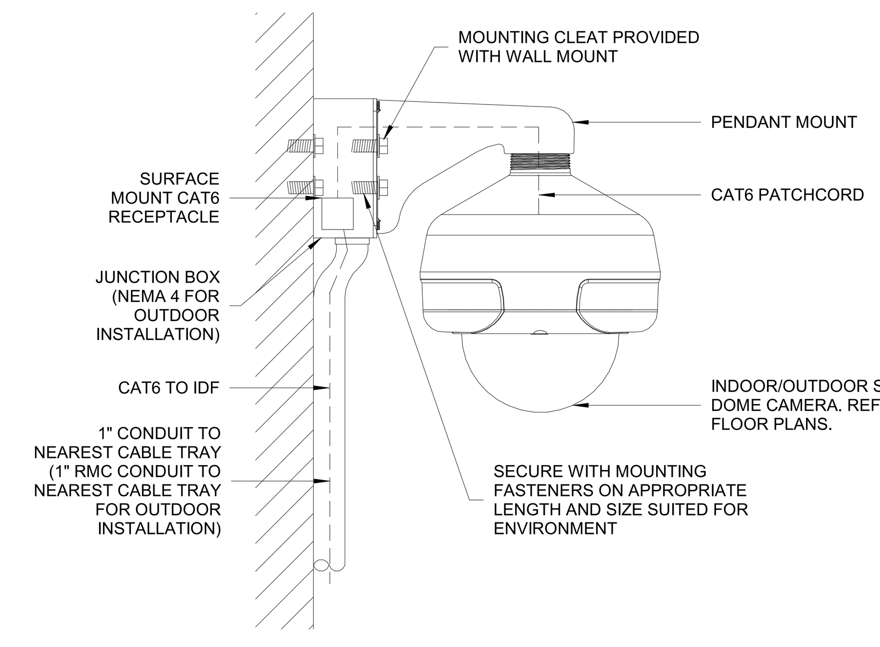

B. SURFACE MOUNT

E2 TYPICAL CAMERA MOUNTING DETAIL - WALL PENDANT MOUNT
NTS

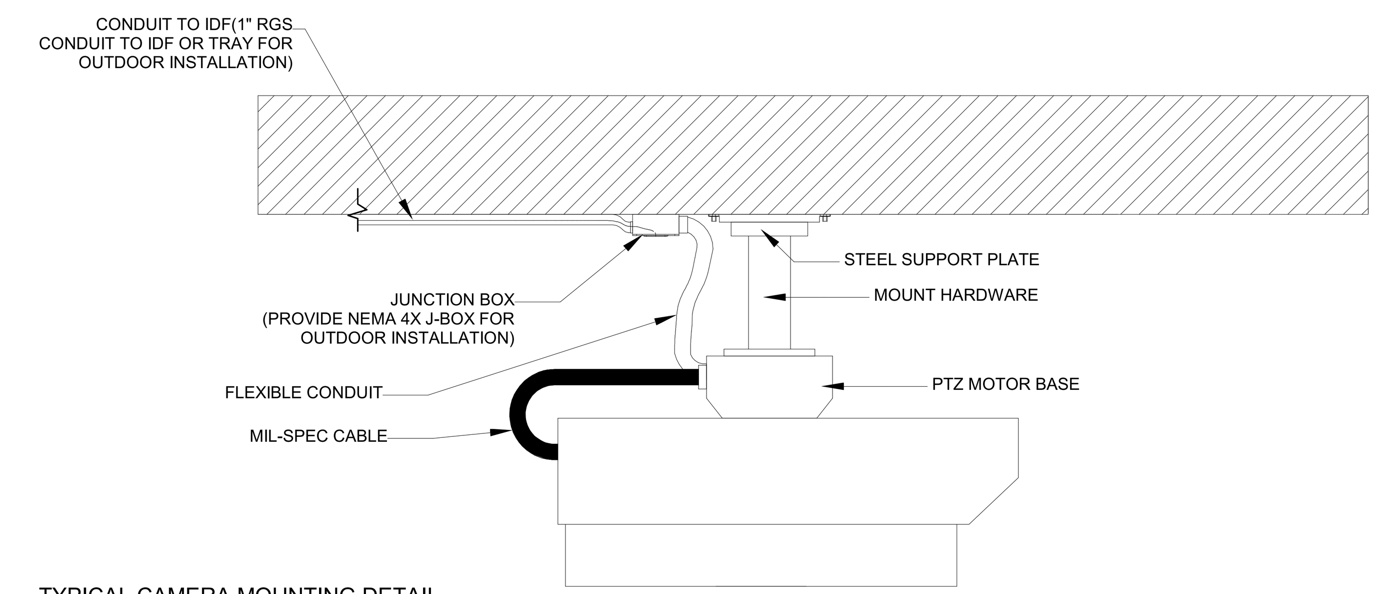

C2 TYPICAL CAMERA MOUNTING DETAIL - FIXED
NTS

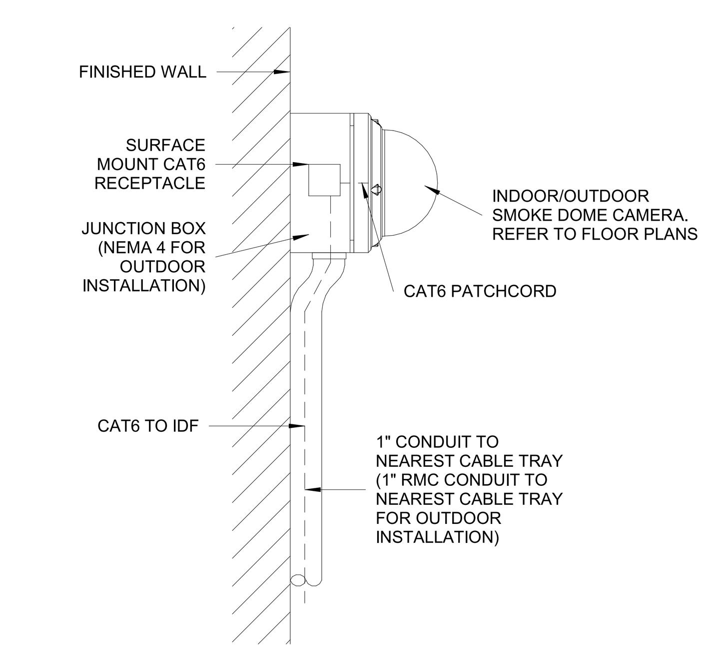

A. SURFACE MOUNT

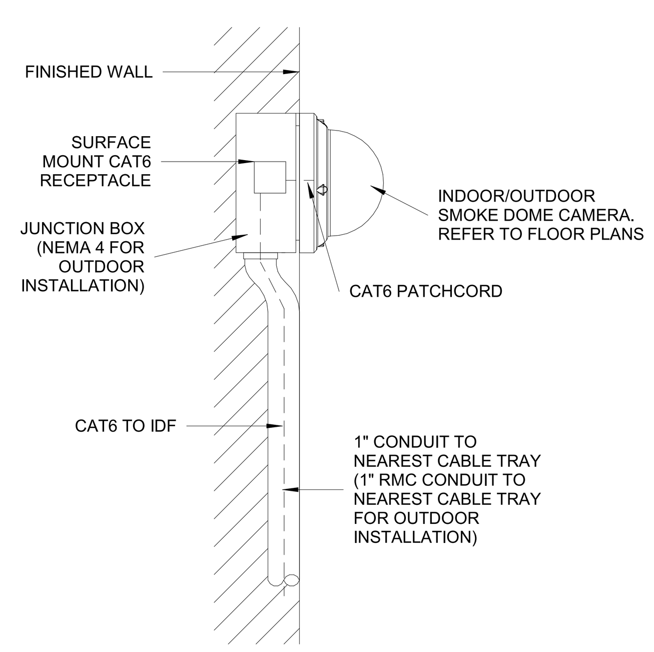

B. FLUSH MOUNT

E1 TYPICAL CAMERA MOUNTING DETAIL - WALL MOUNT
NTS

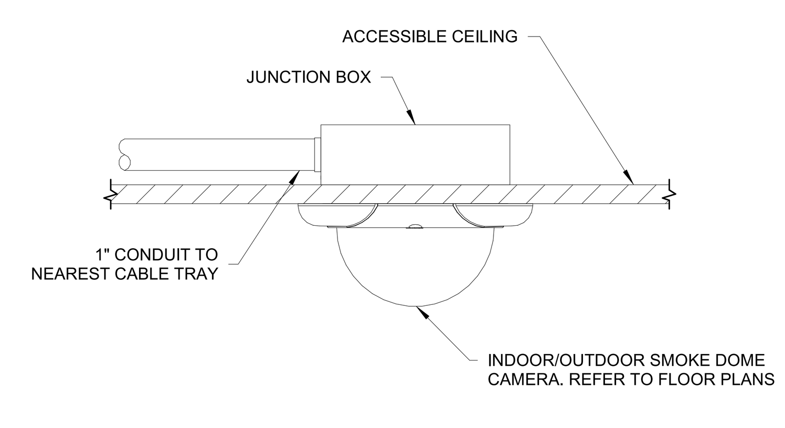

A. RECESS/FLUSH MOUNT

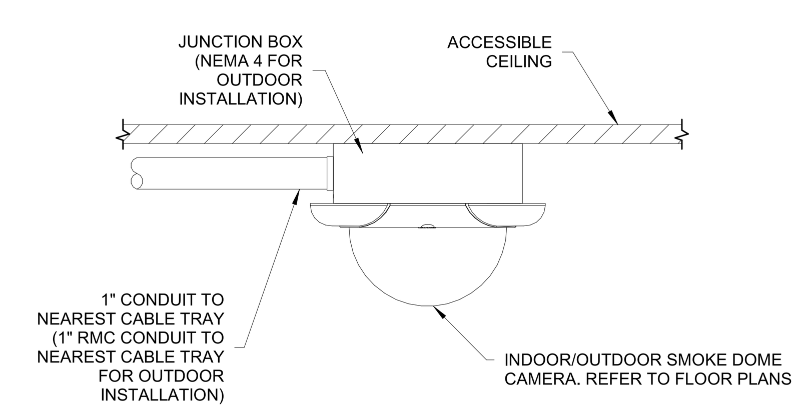

B. SURFACE MOUNT

C1 TYPICAL CAMERA MOUNTING DETAIL - CEILING MOUNT
NTS

FSGROUP® ARCHITECTS
16575 Village Drive
Houston Texas 77040
713 344 1752 PH
fsdesignbuild.com

PROJECT NAME

THE STATE OF TEXAS FORT BEND COUNTY

INFORMATION TECHNOLGY BUILDING
EUGENE HEIMANN CIRCLE
FORT BEND COUNTY . RICHMOND . TEXAS

CONSULTANTS

PGA ENGINEERS, INC
3838 N Sam Houston Pkwy E, Suite 550
Houston, TX 77032
346.570.2418
pgaengineers.com
TBPE FIRM #12493

PROFESSIONAL SEAL

STATE OF TEXAS
JOHN GRUENWALD
100039
LICENSED PROFESSIONAL ENGINEER
05/15/2024

ISSUED FOR

ISSUED FOR PROPOSALS AND PERMIT

REVISIONS

No.	DESCRIPTION	DATE

KEY PLAN

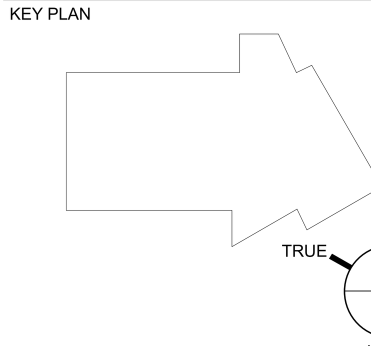

SHEET TITLE

SECURITY - DETAILS

SCALE As indicated

DATE 05/15/2024

PROJECT NUMBER 2319

SHEET NUMBER

TY-602